AirLine 77

OWNERS MANUAL

UHF WIRELESS SYSTEM

HEADSET TRANSMITTER

- AH1/Q Series Aerobics and Vocal Headset Transmitter
- AH1/HM40 Wind Instrument Transmitter
- CR77 Receiver

WIND INSTRUMENT TRANSMITTER

SAMSON®
WIRELESS

Table of Contents

Introduction	**4**
QuickStart	**6**
Guided Tour - CR77 Receiver	**8**
Guided Tour - AH1 Headset Transmitter	**11**
Guided Tour - AH1 Horn Microphone	**14**
Setting Up and Using Your AirLine System	**15**
Specifications	**18**
Channel Plan	**20**

Copyright 2011, Samson Technologies Corp.

V5

Samson Technologies Corp.
45 Gilpin Avenue
Hauppauge, New York 11788-8816
Phone: 1-800-3-SAMSON (1-800-372-6766)
Fax: 631-784-2201
www.samsontech.com

Important Safety Information

CAUTION: TO REDUCE THE RISK OF ELECTRIC SHOCK, DO NOT REMOVE COVER (OR BACK). NO USER-SERVICEABLE PARTS INSIDE. REFER SERVICING TO QUALIFIED SERVICE PERSONNEL.

ATTENTION
RISQUE D'ÉLECTROCUTION !
NE PAS OUVRIR !

This lightning flash with arrowhead symbol within an equilateral triangle is intended to alert the user to the presence of non-insulated "dangerous voltage" within the product's enclosure that may be of sufficient magnitude to constitute a risk of electric shock.

The exclamation point within an equilateral triangle is intended to alert the user to the presence of important operating and maintenance instructions in the literature accompanying the appliance.

WARNING

TO PREVENT FIRE OR SHOCK HAZARD. DO NOT USE THIS PLUG WITH AN EXTENSION CORD, RECEPTACLE OR OTHER OUTLET UNLESS THE BLADES CAN BE FULLY INSERTED TO PREVENT BLADE EXPOSURE. TO PREVENT FIRE OR SHOCK HAZARD. DO NOT EXPOSE THIS APPLIANCE TO RAIN OR MOISTURE. TO PREVENT ELECTRICAL SHOCK, MATCH WIDE BLADE PLUG TO WIDE SLOT AND FULLY INSERT.

If you want to dispose this product, do not mix it with general household waste. There is a separate collection system for used electronic products in accordance with legislation that requires proper treatment, recovery and recycling.

Private household in the 28 member states of the EU, in Switzerland and Norway may return their used electronic products free of charge to designated collection facilities or to a retailer (if you purchase a similar new one).

For Countries not mentioned above, please contact your local authorities for a correct method of disposal.

By doing so you will ensure that your disposed product undergoes the necessary treatment, recovery and recycling and thus prevent potential negative effects on the environment and human health.

Important Safety Information

1. Read these instructions.
2. Keep these instructions.
3. Heed all warnings.
4. Follow all instructions.
5. Do not use this apparatus near water.
6. Clean only with dry cloth.
7. Do not block any ventilation openings. Install in accordance with the manufacturer's instructions.
8. Do not install near any heat sources such as radiators, heat registers, stoves, or other apparatus (including amplifiers) that produce heat.
9. Do not defeat the safety purpose of the polarized or grounding type plug. A polarized plug has two blades with one wider than the other. A grounding type plug has two blades and a third grounding prong. The wide blade or the third prong are provided for your safety. If the provided plug does not fit into your outlet, consult an electrician for replacement of the obsolete outlet.
10. Protect the power cord from being walked on or pinched particularly at the plugs, convenience receptacles, and at the point where they exit from the apparatus.
11. Only use attachments/accessories specified by the manufacturer.
12. Use only with the cart, stand, tripod, bracket, or table specified by the manufacturer, or sold with the apparatus. When a cart is used, use caution when moving the cart/apparatus combination to avoid injury from tip-over.
13. Unplug the apparatus during lightening storms, or when unused for long periods of time.
14. Refer all servicing to qualified personnel. Service is required when the apparatus has been damaged in any way, such as power supply cord or plug is damaged, liquid has been spilled or objects have fallen into the apparatus has been exposed to rain or moisture, does not operate normally, or has been dropped.
15. This appliance shall not be exposed to dripping or splashing water and that no object filled with liquid such as vases shall be placed on the apparatus.
16. Caution-to prevent electrical shock, match wide blade plug wide slot fully insert.
17. Please keep a good ventilation environment around the entire unit.
18. The direct plug-in adapter is used as disconnect device, the disconnect device shall remain readily operable.
19. Batteries (battery pack or batteries installed) shall not be exposed to excessive heat such as sunshine, fire or the like.

FCC Rules and Regulations

Samson wireless receivers are certified under FCC Rules part 15 and transmitters are certified under FCC Rules part 74.
Licensing of Samson equipment is the user's responsibility and licensability depends on the user's classification, application and frequency selected.

This device complies with Part 15 of the FCC rules Class B and RSS-210 of Industry & Science Canada.
Operation is subject to the following two conditions:
(1) This device must not cause harmful interference, and
(2) This device must accept any interference received including interference that may cause undesired operation. Suitable for home or office use.

NOTE: This equipment has been tested and found to comply with the limits for a Class B digital device, pursuant to Part 15 of the FCC Rules. These limits are designed to provide reasonable protection against harmful interference in a residential installation. This equipment generates, uses and can radiate radio frequency energy and, if not installed and used in accordance with the instructions, may cause harmful interference to radio communications. However, there is no guarantee that interference will not occur in a particular installation. If this equipment does cause harmful interference to radio or television reception, which can be determined by turning the equipment off and on, the user is encouraged to try to correct the interference by one or more of the following measures:

- Reorient or relocate the receiving antenna.
- Increase the separation between the equipment and receiver.
- Connect the equipment into an outlet on a circuit different from that to which the receiver is connected.
- Consult the dealer or an experienced Radio/TV technician for help.

WARNING: Changes or modifications not expressly approved by the party responsible for compliance could void the user's authority to operate the equipment.

This equipment is intended for use in wireless microphone applications.
Equipment is intended for sale in: AT, BE, CH, CY, CZ*, DK, EE, FI*, FR*, DE*, GR*, HU, IE, IS, IT, LV, LT*, LU, MT*, NL, NO*, PL* PT, RO, SK, SI, ES, SE, UK
*Subject to license. Please contact your national frequency authority for information on available legal use in your area. Any changes or modifications not expressly approved by Samson Technologies Corp. could void your authority to operate the equipment.

Hereby, Samson Technologies Corp., declares that this CR88 and AG8 is in compliance with the essential requirements and other relevant provisions of Directive 2014/53/EU. The declaration of conformity may be consulted at:
http://www.samsontech.com/site_media/support/manuals/AirLine88_AG8_DOC.pdf

Welcome to Samson AirLine—the wireless system for the new millenium! Wireless microphone and instrument systems were originally developed to eliminate cables, providing unparalleled freedom of movement. AirLine takes this concept to a new level with transmitters so small, lightweight and aerodynamic, they are nearly invisible, providing a completely "hassle-free" user experience. To create the world's smallest wireless transmitters, we developed new proprietary technology. Featuring miniaturized circuitry and the ability to operate on a single tiny AAA battery (with 14 hours typical battery life), these transmitters also feature significantly improved wireless reception and sound quality.

Samson AirLine systems operate in the K, N, U and E bands UHF frequency range and contains a CR77 true diversity receiver (for professional performance applications) .The AirLine UHF System combines a feather-light AH1 headset transmitter with a Samson Q Series headset microphone, ideal for fitness and performance applications. The AirLine UHF Wind Instrument System combines the AH1 with a Samson HM40 horn microphone. It is the first wireless system designed for brass and reed instruments that eliminates the need for a body pack and unwieldy microphone cables that limit your movement.

In this manual, you'll find a more detailed description of the features of all AirLine systems, as well as a guided tour through all components, step-by-step instructions for setting up your system and full specifications. If your AirLine system was purchased in the United States, you'll also find a warranty card enclosed—don't forget to fill it out and mail it! This will enable you to receive online technical support and will allow us to send you updated information about this and other Samson products in the future. If your AirLine system was purchased outside of the U. S., contact your local distributor for warranty details. Also, be sure to check out our website (http://www.samsontech.com) for complete information about our full product line.

SPECIAL NOTE for U.S. purchasers: Should your AirLine system ever require servicing, a *Return Authorization* number (RA) is necessary. Without this number, the unit will not be accepted. If your AirLine system was purchased in the United States, please call Samson at 1-800-372-6766 for a Return Authorization number prior to shipping your system. If possible, return the unit in its original carton and packing materials. If your AirLine system was purchased outside of the U. S., contact your local distributor for information.

If you've had some prior experience using wireless systems, these QuickStart instructions will get you up and running with your AirLine sys-

Welcome to Samson AirLine—the wireless system for the new millenium! Wireless microphone and instrument systems were originally developed to eliminate cables, providing unparalleled freedom of movement. AirLine takes this concept to a new level with transmitters so small, lightweight and aerodynamic, they are nearly invisible, providing a completely "hassle-free" user experience. To create the world's smallest wireless transmitters, we developed new proprietary technology. Featuring miniaturized circuitry and the ability to operate on a single tiny AAA battery (with 14 hours typical battery life), these transmitters also feature significantly improved wireless reception and sound quality.

Samson AirLine systems operate in the N, U and E bands UHF frequency range and contains a CR77 true diversity receiver (for professional performance applications) .The AirLine UHF System combines a feather-light AH1 headset transmitter with a Samson Q Series headset microphone, ideal for fitness and performance applications. The AirLine UHF Wind Instrument System combines the AH1 with a Samson HM40 horn microphone. It is the first wireless system designed for brass and reed instruments that eliminates the need for a body pack and unwieldy microphone cables that limit your movement.

In this manual, you'll find a more detailed description of the features of all AirLine systems, as well as a guided tour through all components, step-by-step instructions for setting up your system and full specifications. If your AirLine system was purchased in the United States, you'll also find a warranty card enclosed—don't forget to fill it out and mail it! This will enable you to receive online technical support and will allow us to send you updated information about this and other Samson products in the future. If your AirLine system was purchased outside of the U. S., contact your local distributor for warranty details. Also, be sure to check out our website (http://www.samsontech.com) for complete information about our full product line.

SPECIAL NOTE for U.S. purchasers: Should your AirLine system ever require servicing, a *Return Authorization* number (RA) is necessary. Without this number, the unit will not be accepted. If your AirLine system was purchased in the United States, please call Samson at 1-800-372-6766 for a Return Authorization number prior to shipping your system. If possible, return the unit in its original carton and packing materials. If your AirLine system was purchased outside of the U. S., contact your local distributor for information.

If you've had some prior experience using wireless systems, these QuickStart instructions will get you up and running with your AirLine sys-

tem in a matter of minutes! Detailed instructions for setting up and using your AirLine system can be found on page 14 of this manual, and the "Guided Tour" sections on pages 4 - 13 provide full descriptions of all AirLine component controls and displays.

1. Make sure that the supplied receiver and AH1 transmitter are factory preset to the same channel.

2. Physically place the receiver where it will be used and extend its antenna(s) vertically.

3. Set the power switch on your AH1 transmitter to the "off" position (away from the arrow) and place a fresh battery in it. Then turn the transmitter back on momentarily; its LED will flash once and then go off if the battery is sufficiently strong. Once battery strength is verified, turn the transmitter off again.

4. If you are using an AH1 headset microphone, position it correctly as per the illustrations on page 12. If you are using an AirLine UHF Wind Instrument System, clamp the horn mic to your instrument as described in the supplied HM40 owners manual.

5. Turn your audio system off and make the physical cable connection between the receiver's balanced or unbalanced output jack (if necessary, both can be used simultaneously) and a mic level audio input of your amplifier or mixer. If your system contains a CR77,be sure to set its Audio Output Level switch correctly.

6. Turn the Volume, Level or AF Level knob on the receiver completely counterclockwise. Connect the supplied AC adapter to the receiver and plug it in , but leave its power off for the moment.

7. Turn on the receiver. If your system contains a CR77 receiver, its "Power" LED will light steadily red.

8. Turn on your AH1 transmitter. If your system contains an AR1 receiver, its "Power/ RF" LED should change color from red to green, indicating that it is receiving valid RF signal and is placed and positioned correctly. If your system contains either a CR77 one of the "A/B Receiver" LEDs will be lit, showing you whether the (left) "A" or (right) "B" receiver is currently being used. The CR77 meter will also indicate the strength of the incoming RF signal.

9. Turn on your connected amplifier and/or mixer but keep its volume all the way down. Make sure the AH1 transmitter is unmuted. Set the Volume, Level or AF Level knob on the receiver fully clockwise; this is unity gain.

10. Speak or sing into your headset microphone (or play the instrument connected to the horn microphone) at a normal performance level while slowly raising the audio input control of your amplifier or mixer until the desired level is reached.

11. Do a walkaround through the intended area of coverage while observing the receiver's "Power/RF" LED or RF Meter; it should indicate sufficient RF reception in all areas of coverage. Reposition it (or its antenna) as necessary. If extended range coverage is required, a Samson CR77 true diversity receiver (set to the same channel as the transmitter) should be used

12. If you hear any spurious noise from the receiver output when the transmitter is turned off, use the supplied plastic screwdriver to adjust the receiver Squelch level control, slowly turning it clockwise to the point at which the noise disappears.

Guided Tour - CR77 Receiver / Front Panel

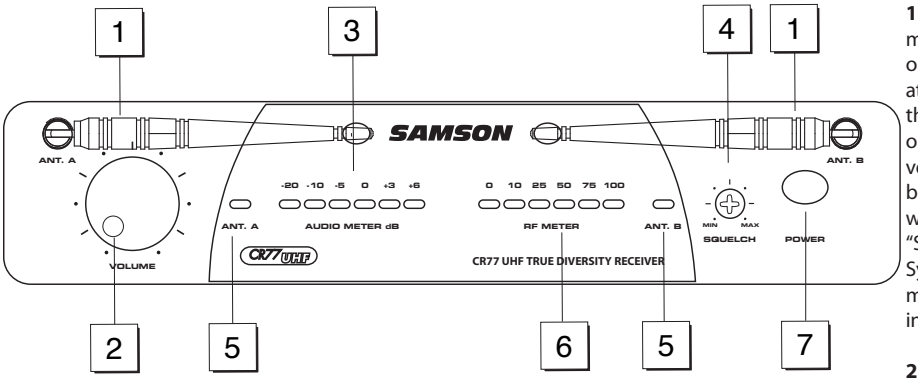

1: Antennas (A and B) - The antenna mountings allow full rotation for optimum placement. In normal operation, both Antenna A (the antenna on the left) and Antenna B (the antenna on the right) should be placed in a vertical position. Both antennas can be folded inward for convenience when transporting the CR77. See the "Setting Up and Using the AirLine System" section on page 14 in this manual for information about antenna installation and positioning.

2: Volume control - This knob sets the level of the audio signal being output through both the balanced and unbalanced output jacks on the rear panel (see #2 and #4 on page 6 in this manual). Reference level is obtained when the knob is turned fully clockwise (to its "10" setting).

3: Audio Meter - - This "ladder" display (similar to the VU bar meter used on audio devices) indicates the strength of the incoming audio signal. When the "0" segment is lit, the incoming signal is optimized at unity gain; when the "+6" segment is lit, the signal is overloading. When only the left-most "-20" segment is lit, the incoming signal is at just 10% of optimum strength. If no segments are lit, little or no signal is being received. See the "Setting Up and the AirLine System" section on page 14 in this manual for more information.

4: Squelch control - This control determines the maximum range of the CR77 before audio signal dropout. Although it can be adjusted using the supplied plastic screwdriver, it should normally be left at its factory setting. See the "Setting Up and Using the AirLine System" section on page 14 in this manual for more information.

5: A/B Receiver LEDs - When signal is being received, one of these will be lit green, showing you whether the (left) "A" or (right) "B" receiver is currently being used. The CR77 constantly scans its two antennas and automatically selects whichever is receiving the strongest, clearest signal. This **True Diversity** switching is completely inaudible, but it effectively increases overall range while virtually eliminating potential interference and phase cancellation problems.

6: RF (Radio Frequency) Level meter - This "ladder" display (similar to the VU bar meter used on audio devices) indicates the strength of the incoming radio signal. When the "100%" segment is lit, the incoming RF signal is fully modulated and at optimum strength. When only the second most left-most "10%" segment is lit, the incoming signal is at just 10% of optimum strength. If no segments are lit, little or no signal is being received. See the "Setting Up and Using the AirLine System" section on page 14 in this manual for more information.

7: Power switch - Use this to turn the CR77 power on and off. When the receiver is on, the internal Power LED is lit.

Guided Tour - CR77 Receiver / Rear Panel

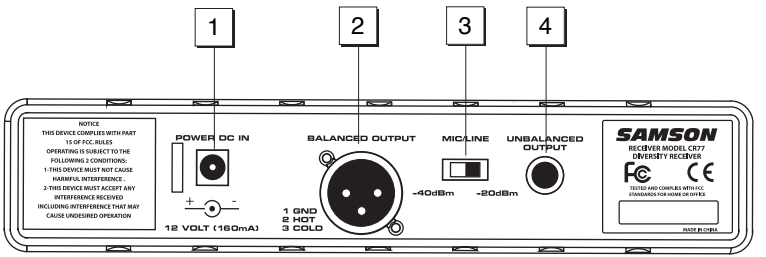

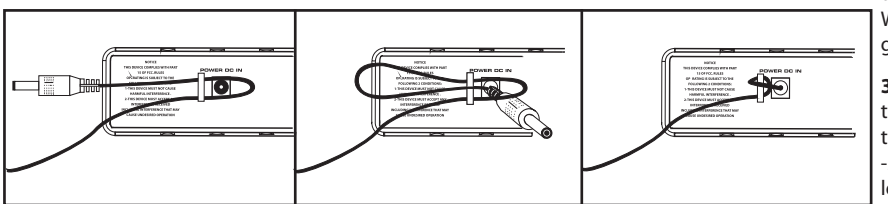

Using the strain relief: Gather up a loop of wire and pass it through the strain relief, then pass the adapter plug through the loop in order to create a knot.

1: DC input - Connect the supplied 12 volt 160 mA power adapter here, using the strain relief as shown in the illustration below. **WARNING:** Do *not* substitute any other kind of power adapter; doing so can cause severe damage to the CR77 and will void your warranty.

2: Unbalanced output* - Use this unbalanced high impedance (5K Ohm) 1/4" jack when connecting the CR77 to consumer (-10) audio equipment. Wiring is as follows: tip hot, sleeve ground.

3: Audio Output Level switch - Sets the audio output level attenuation of the balanced output (see #4 below) to -20 dBm (line level) or -40 dBm (mic level). See "Setting Up and Using the AirLine System" on page 14.

4: Balanced output* - Use this electronically balanced low impedance (600 Ohm) XLR jack when connecting the CR77 to professional (+4) audio equipment. Pin wiring is as follows: Pin 1 ground, Pin 2 high (hot), and Pin 3 low (cold).

** If required, both the unbalanced and balanced outputs can be used simultaneously.*

Guided Tour - AH1 Headset Transmitter

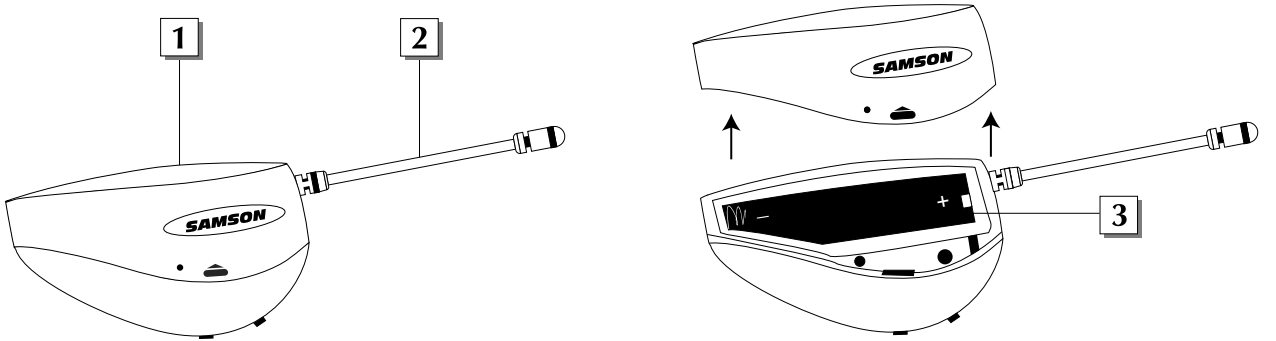

1: Power / Battery LED - This LED flashes once when the AH1 is first turned on and lights steadily red when there is less than 2 hours of battery power remaining, indicating that the battery needs to be changed.

2: Antenna - This permanently attached flexible antenna should be fully extended during normal operations. See the "Setting Up and Using the AirLine System" section on page 14 in this manual for more information about antenna positioning.

3: Battery compartment - Insert a standard AAA alkaline battery here, being sure to observe the plus and minus polarity markings shown. We recommend the Duracell type battery. Although rechargeable Ni-Cad batteries can be used, they do not supply adequate current for more than four hours. **WARNING:** Do not insert the battery backwards; doing so can cause severe damage to the AH1 and will void your warranty.

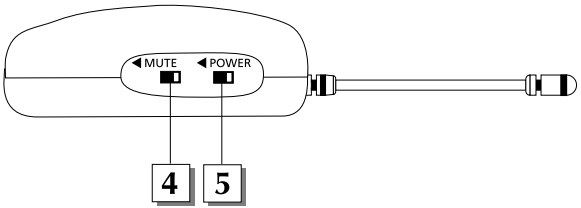

4: Mute switch - Move this switch in the direction of the arrow to mute the AH1; move it away from the arrow to unmute it and transmit audio signal. Because the carrier signal remains during muting, no "pop" or "thud" will be heard. Note that turning this off does *not* turn off the transmitter power—it is simply a way to temporarily mute the transmission of audio signal. If you don't plan on using the AH1 for extended periods, turn it off power by using the power on-off switch (see #5 below).

5: Power switch - Move this switch in the direction of the arrow to turn power to the AH1 on; move it away from the arrow to turn power off. (to conserve battery power, be sure to turn the AH1 off when not in use). Be sure to mute the audio signal at your external mixer or amplifier before turning the AH1 power on or off, or an audible pop may result.

Guided Tour - AH1 Headset Transmitter

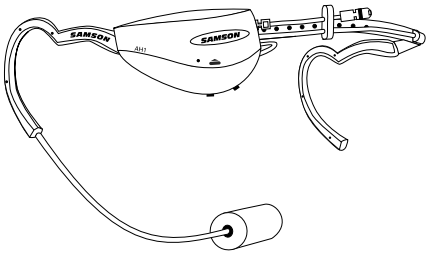

AH1 transmitter with Samson Q series Headset Mic for performance and fitness applications.

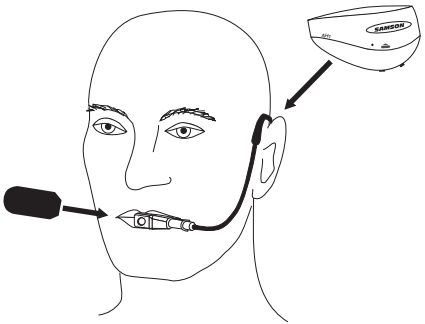

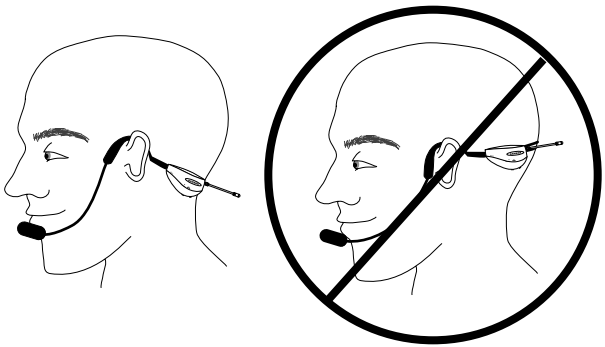

Right way *Wrong way*

As shown in the illustration above, the correct way to wear your Q Series Headset is over the ears, as you would wear a pair of eyeglasses. Because the Q Series Headsets are specially designed to be used up close, be sure to mount the microphone directly in front of your lips. To avoid feedback problems, take care not to cover the mic capsule with your hand.

IMPORTANT NOTE: As shown in the illustration on the left, the rear band of the headset should be positioned down at the base of the neck, not high up on the back of the head.

Guided Tour - AH1 Horn Microphone

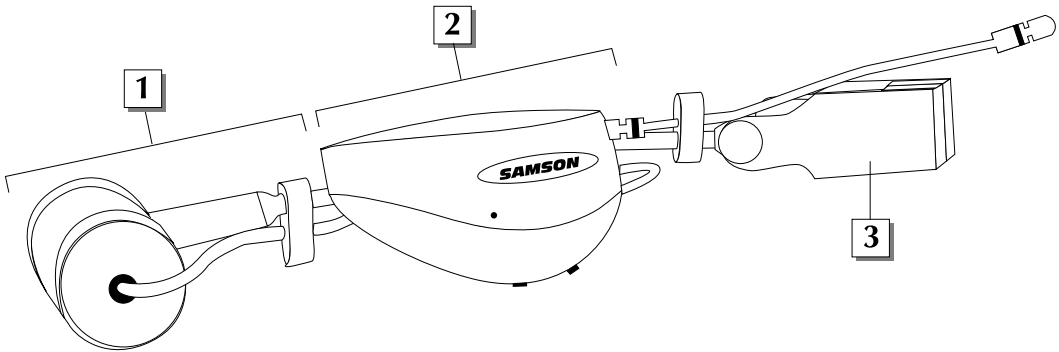

1: Samson HM40 horn microphone - This microphone is "hard-wired" to a Samson AH1 headset transmitter (see #2 below). See the supplied HM40 owners manual for microphone positioning instructions.

2: Samson AH1 headset transmitter - See pages 13 - 14 in this manual for more information.

3: Horn bell clamp - Use this to attach the entire assembly to the bell of your horn. See the supplied HM40 owners manual for instructions.

Setting Up and Using Your AirLine System

The basic procedure for setting up and using your AirLine System takes only a few minutes:

1. For your AirLine system to work correctly, both the receiver and transmitter must be set to the same channel. Remove all packing materials (save them in case of need for future service) and check to make sure that the supplied receiver and transmitter are set to the same channel (a complete channel plan is printed on the inside back cover of this manual). If these channels do not match, contact your distributor or, if purchased in the United States, Samson Technical Support at 1-800-372-6766.

2. Physically place the receiver where it will be used (the general rule of thumb is to maintain "line of sight" between the receiver and transmitter so that the person using or wearing the transmitter can see the receiver). The CR77 can be rack-mounted if desired (taking a half-rack space), using an optional Samson adapter kit.

3. Extend the receiver antenna(s) and place it (them) in a vertical position. Make sure the Power on-off switch in your AH1 transmitter is set to "Off."

4. Gently pry off the battery cover off the AH1 transmitter and slide it upwards and off to open the battery compartment. Please use care when opening this cover as undue force will destroy the hinge.

5. Place a fresh AAA alkaline battery in the transmitter battery compartment, taking care to observe the polarity markings. Then replace the battery cover and gently press down on it until it clicks. Leave the AH1 off for the moment.

6. Make the physical cable connection between the receiver output jack and a mic level audio input of your amplifier or mixer. The balanced XLR jack is preferable, since it will deliver an electromagnetically cleaner signal. If required, both the balanced and unbalanced outputs can be used simultaneously. If your system contains a CR77 receiver, be sure to set its Audio Output Level switch correctly (see pages 7 and 9 for details). Leave your amplifier (and/or mixer) off at this time.

7. Turn the Volume, Level or AF Level knob on the receiver completely counterclockwise. Connect the supplied AC adapter to the CR77 receiver and plug it in then plug the adapter into any standard AC outlet. Slide the Power switch in the direction of the arrow to turn on the receiver. If your system contains a CR77 receiver, its "Power" LED will light steadily red.

8. Turn on the power to your AH1 transmitter (using its Power on-off switch); the "Power/Battery" LED will flash if the battery is sufficiently strong (if it lights steadily, the battery has less than 2 hours of power remaining and should be replaced). If your system contains either a CR77 receiver, one of the "A/B Receiver" LEDs will light, showing you whether the (left) "A" or (right) "B" receiver is currently being used. The CR77 meter will also indicate the strength of the incoming RF signal.

9. Now it's time to set the audio levels. Turn on your connected amplifier and/or mixer but keep its volume all the way down. Make sure that the AH1 transmitter is unmuted (its Mute switch should be positioned away from the arrrow). Then set the Volume, Level or AF Level knob on the receiver fully clockwise; this is unity gain.

10. Speak or sing into your headset mic (or play the instrument to which the horn mic is attached) at a normal performance level while slowly raising the volume of your amplifier and/or mixer until the desired level is reached.

11. If you hear distortion at the desired volume level, first check to see whether the "Peak" LED on the receiver is lit . If it is *not* lit, make sure that the gain structure of your audio system is correctly set (consult the owners manual of your mixer and/or amplifier for details). If the "Peak" LED *is* lit, simply move the microphone further from your mouth.

12. Conversely, if you hear a weak, noisy signal at the desired volume level, again make sure that the gain structure of your audio system is correctly set (consult the owners manual of your mixer and/or amplifier for details) and that the Volume, Level or AF Level control of the receiver is fully clockwise. If it is and the signal coming from the receiver is still weak and/or noisy, simply position the microphone closer to your mouth.

13. Temporarily turn down the level of your mixer/amplifier system and turn off the power to your transmitter, leaving the receiver on. Then restore the previously set level of your mixer/amplifier. With the transmitter off, the receiver output should be totally silent—if it is, skip ahead to the next step. If it isn't (that is, if you hear some noise), you may need to adjust the receiver Squelch control. When the Squelch control is at its minimum setting, the AirLine system always provides maximum range without dropout; however, depending upon the particular environment your system is used in, you may need to reduce that range somewhat in order to eliminate band noise when the AH1

transmitter is turned off. To do so, use the provided screwdriver to rotate the Squelch control completely counterclockwise (to the "Min" position), then slowly turn it clockwise until the noise disappears. If no noise is present at any position, leave it at its fully counterclockwise "Min" position (so as to have the greatest overall range available).

14. When first setting up your AirLine System in a new environment, it's always a good idea to do a walkaround in order to make sure that coverage is provided for your entire performance area. Accordingly, turn down the level of your audio system and turn on both the transmitter and receiver. Then, with the transmitter unmuted, restore the level of your audio system and while speaking or singing, walk through the entire area that will need to be covered. As you do so, observe the RF display or meter on the receiver to make sure that it is receiving sufficiently strong RF signal (in the CR77 receivers, all segments of the RF Level meter should be lit). Always try to minimize the distance between transmitter and receiver as much as possible so that the strongest possible signal is received from all planned transmission points. In certain environments, it may be desirable to angle the receiver antenna(s) differently from the vertical position. Where extended range coverage is required, the Samson CR77 true diversity receiver (set to the same channel as the transmitter) should be used.

If you have followed all the steps above and are experiencing difficulties, contact your local distributor or, if purchased in the United States, call Samson Technical Support (1-800-372-6766) between 9 AM and 5 PM EST.

Transmitter (AH1)

Operating Power Voltage	1.5V Typical, 1.05V Minimum, 2V Maximum
Current Consumption	60mA Typical
Battery Life	14 Hours (AAA size battery)
RF Output Power (5mW)	-4dB Minimum, +3dB Maximum
Frequency Stability	-40kHz Minimum, 40kHz Maximum
Spurious	1µW
Modulation Factor	13kHz Minimum, 15kHz Typical, 17kHz Maximum, Input 1kHz-20dBv
Input Impedance (Mic)	2K ohms
THD	< 2% (1 kHz deviation 15kHz)
Audio Frequency Response	50Hz - 15kHz (±3.5 dB)
Controls	Power Switch, Mute Switch Volume
Input	2.5mm Stereo Jack
Indicators	Power On (LED Flash), Low Battery (LED On

Specifications

CR77 Receiver

Receiving Frequencies	USA 489-492MHz, 642-646 MHz (N1-N6), Europe 863-865 MHz (E1-E4)
Oscillation Type	PLL
De-emphasis	50 msec
IF Frequency	10.7 MHz
A/B Antennas	1/4 Wavelength Rod
In/Out	DC Inlet, Balanced Output, Unbalanced Output
Display (LED)	Receiver A/B (Green), Power On (Red), AF Level (6 segment), RF Level (6 segment)
Level Control	Audio Level Volume, Squelch Level Control
Operating Temperature	0° C / 50° C
Operating Voltage	15 Volts ±10%
Current Consumption	160 mA (all LED lights illuminated)
Sensitivity	18 dBm (@ THD 2%)
Squelch Sensitivity	0 - 40 dBm (Adjustable)
Selectivity	±150 kHz (AF Out Ratio -60 dB)
T.H.D. (Overall)	1% Max (@AF 1 kHz, RF 46 dBu)
S/N Ratio (Overall)	90 dB (w/IHF-A Filter)
Residual Noise	90 dBv (w/IHF-A Filter)
Band Squelch	±40 kHz / ±100 kHz (RF IN: 46 dBu EMF)
AF Frequency Response	50 Hz - 15 kHz (±3 dB overall)
Audio Output Level - Unbalanced	0 dBv
Audio Output Level - Balanced (slide switch selectable)	-20 dBm (Line), -40 dBm (Mic)
Audio Output Impedance - Unbalanced	5 k Ohms
Audio Output Impedance - Balanced	600 Ohms

AirLine Channel Plan

AirLine / AirLine 77 UHF Wireless System	
Country Code Code de Pays Laender-Kuezel	Authorised Frequency Range Bande de Fréquences Autorisée Frequenzbereich
AT, BE, CH, DK, ES, FI, GB, IE, NL, NO, PT, SE	863 – 865 MHz
DE, FR, IT *	801 – 806 MHz, 863 – 865 MHz
GR	801 – 806 MHz
US, CA, IT *	642 – 646 MHz,489 – 492 MHz
* For other countries please contact your national frequency authority for information on available legal frequencies and legal use in your area.	
CE0678 ⓘ	

Channel	Frequencies	Channel	Frequencies	Channel	Frequencies	Channel	Frequencies
N1	642.375 MHz	U1	801.375 MHz	E1	863.125 MHz	K1	489.050MHz
N2	642.875 MHz	U2	801.875 MHz	E2	863.625 MHz	K2	490.975MHz
N3	644.125 MHz	U3	803.125 MHz	E3	864.500 MHz	K3	492.425MHz
N4	644.750 MHz	U4	803.750 MHz	E4	864.875 MHz		
N5	645.500 MHz	U5	804.500 MHz				
N6	645.750 MHz	U6	804.750 MHz				

SAMSON®
WIRELESS

Samson Technologies Corp.
45 Gilpin Avenue
Hauppauge, New York 11788-8816
Phone: 1-800-3-SAMSON (1-800-372-6766)
Fax: 631-784-2201
www.samsontech.com

Samson Manual for Airline AH1 091005 v4.4