MEDIAONE BT

POWERED STUDIO MONITORS WITH BLUETOOTH®

OWNER'S MANUAL

SAMSON®

Important Safety Information

AVIS
RISQUE DE CHOC ÉLECTRONIQUE -
NE PAS OUVRIR

This lightning flash with arrowhead symbol within an equilateral triangle is intended to alert the user to the presence of non-insulated "dangerous voltage" within the product's enclosure that may be of sufficient magnitude to constitute a risk of electric shock.

The exclamation point within an equilateral triangle is intended to alert the user to the presence of important operating and maintenance instructions in the literature accompanying the appliance.

WARNING: To reduce the risk of electric shock, do not expose this apparatus to rain or moisture, do not remove cover (or back) as there are no user-serviceable parts inside. Refer to servicing to qualified service personnel.

Federal Communication Commission Interference Statement

This device complies with part 15 of the FCC Rules. Operation is subject to the following two conditions: (1) This device may not cause harmful interference, and (2) this device accept any interference that may cause undesired operation.

This equipment has been tested and found to comply with the limits for a Class B digital device, pursuant to part 15 of the FCC rules. These limits are designed to provide reasonable protection against harmful interference in a residential installation. This equipment generates, uses, and can radiate radio frequency energy and, if not installed and used in accordance with the instructions, may cause harmful interference to radio communications. However, there is no gaurantee that interference will not occur in a particular installation. If this equipment does cause harmful interference to radio or television reception, which can be determined by turning the equipment off and on the user is encouraged to try to correct the interference by one or more of the following measures:

- Reorient or relocate the receiving antenna.
- Increase the separation between the equipment and receiver.
- Connect the equipment into an outlet on a circuit different from that to which the receiver is connected.
- Consult the dealer or an experienced radio/TV technician for help.

Radiation Exposure Statement: This equipment complies with FCC radiation exposure limits set forth for an unctrolled environment. This equipment should be installed and operated within a minimum distance of 20cm between the radiator and your body.

Caution: Any changes or modifications not expressly approved by the party responsible for compliance could void the user's authority to operate the equipment. This transmitter must not be co-located or operated in conjuction with any other antenna or transmitter. That separate approval is required for all other operating configurations, including portable configurations with respect to Part 2. 1093 and different antenna configurations.

If you want to dispose this product, do not mix it with general household waste. There is a separate collection system for used electronic products in accordance with legislation that requires proper treatment, recovery and recycling.

Private household in the 27 member states of the EU, in Switzerland and Norway may return their used electronic products free of charge to designated collection facilities or to a retailer (if you purchase a similar new one).

For Countries not mentioned above, please contact your local authorities for a correct method of disposal.

By doing so you will ensure that your disposed product undergoes the necessary treatment, recovery and recycling and thus prevent potential negative effects on the environment and human health.

Copyright 2022 Samson Technologies, v0

Important Safety Information

1. Read these instructions.
2. Keep these instructions.
3. Heed all warnings.
4. Follow all instructions.
5. Do not use this apparatus near water.
6. Clean only with dry cloth.
7. Do not block any ventilation openings. Install in accordance with the manufacturer's instructions.
8. Do not install near any heat sources such as radiators, heat registers, stoves, or other apparatus (including amplifiers) that produce heat.
9. Do not defeat the safety purpose of the polarized or grounding type plug. A polarized plug has two blades with one wider than the other. A grounding type plug has two blades and a third grounding prong. The wide blade or the third prong are provided for your safety. If the provided plug does not fit into your outlet, consult an electrician for replacement of the obsolete outlet.
10. Protect the power cord from being walked on or pinched particularly at the plugs, convenience receptacles, and at the point where they exit from the apparatus.
11. Only use attachments/accessories specified by the manufacturer.
12. Use only with the cart, stand, tripod, bracket, or table specified by the manufacturer, or sold with the apparatus. When a cart is used, use caution when moving the cart/apparatus combination to avoid injury from tip-over.

13. Unplug the apparatus during lightning storms or when unused for long periods of time.
14. Refer all servicing to qualified personnel. Servicing is required when the apparatus has been damaged in any way, such as power supply cord or plug is damaged, liquid has been spilled or objects have fallen into the apparatus has been exposed to rain or moisture, does not operate normally, or has been dropped.
15. The apparatus shall not be exposed to dripping or splashing and that objects filled with liquids, such as vases, shall not be placed on apparatus.
16. Caution-to prevent electric shock, match wide blade plug wide slot fully insert.
17. Please keep a good ventilation environment around the entire unit.
18. The use of apparatus in moderate climates
19. WARNING: The mains plug/appliance coupler is used as disconnect device, the disconnect device shall remain readily operable.
20. This equipment is a Class II or double insulated electrical appliance. It has been designed in such a way that it does not require a safety connection to electrical earth.
21. No naked flame sources, such as lighted candles, should be placed on the apparatus.

Introduction

Thank you for purchasing the MediaOne BT Powered Studio Monitors with Bluetooth from Samson.

Samson MediaOne M30BT and M50BT Powered Studio Monitors Provide every musician and content creator with reliable, full-range sound. Featuring loads of power, these compact speakers bring excellent sound to any personal audio environment for gamers, music enthusiasts, online conferencing and more. Bluetooth technology adds the convenience of wireless audio streaming from any tablet, laptop, smartphone or other enabled source.

The full-range Samson MediaOne BT Powered Studio Monitors deliver a big sound that is perfectly balanced. The onboard Class AB amplifier pushes out power per with plenty of headroom. Lightweight woven carbon fiber woofers with butyl surrounds, and tuned cabinet-porting keep the bass tight and punchy. The switchable Bass Boost circuit fattens up the low end even more. Silk-dome 3/4" tweeters create a clear, crisp, high-end sound that's never harsh. Custom waveguides ensure smooth highs and create a broader target listening area.

In the box, you'll find a registration card enclosed—please don't forget to follow the instructions so that you can receive online technical support and so we can send you updated information about this and other Samson products in the future. We recommend you keep the following records for reference, as well as a copy of your sales receipt.

Serial number: _____

Date of purchase: _____

Dealer name: _____

If you have any questions or comments regarding the MediaOne BT System or any other products from Samson, do no hesitate to contact us at **support@samsontech.com**.

With proper care and maintenance, your MediaOne BT Powered Studio Monitors will operate trouble-free for many years. Should your MediaOne BT ever require servicing, a Return Authorization (RA) number must be obtained before shipping your unit to Samson. Without this number, the unit will not be accepted. Please visit **www.samsontech.com/ra** for an RA number prior to shipping your unit. Please retain the original packing materials and, if possible, return the unit in its original carton. If your MediaOne BT was purchased outside of the United States, contact your local distributor for warranty details and service information.

Features

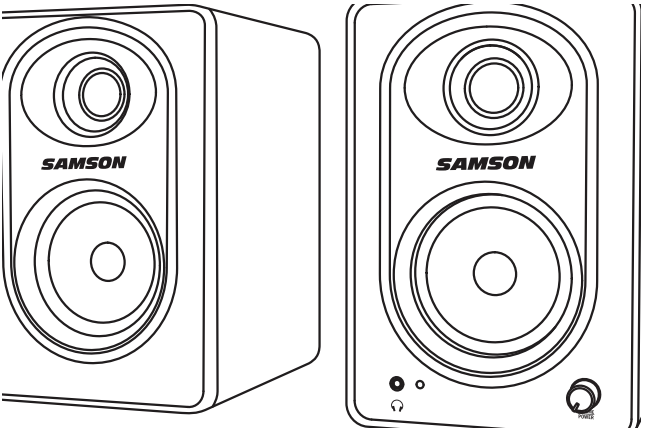

- 20 watts (M30BT) or 80 watts (M50BT) of studio quality sound
- 3” (M30BT) or 5” (M50BT) woven carbon fiber woofers
- 3/4" silk dome tweeters
- Crystal clear high-end performance
- Exceptional bass responser
- Stereo RCA inputs
- Bluetooth Audio streaming
- Bass boost switch
- Headphone output mutes speakers
- Stereo 1/8” Sub output
- Speaker cable included

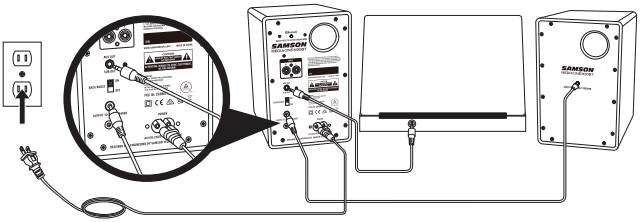

The MediaOne BT main input connections can be made via the rear panel RCA inputs. Follow the simple steps and diagram below for connecting an audio source to the speakers.

1. Connect the left and right speakers using the included two-conductor 1/8” (3.5mm) speaker cable.
2. Turn the MediaOne BT Volume control completely counter-clockwise until it clicks to the minimum/off setting.
3. Connect the MediaOne BT to an AC power outlet using the included power cable.
4. Connect the audio output from your audio source such as a computer or portable audio device to the RCA inputs of the MediaOne BT right side speaker.
5. Turn the Volume control clockwise until it clicks to turn the MediaOne BT speakers on. The front panel Power Indicator will light white.
6. Play music from your audio source and slowly raise the volume of the MediaOne BT to a comfortable listening level.

Note: Before plugging in and turning on, remember the “last on, first off” rule of powered speakers. When powering up your system, be sure that all the wires are connected, turn your mixer and any other outboard gear on, and then last turn on your MediaOne M30. When powering down, turn your MediaOne BT off first and then your mixer and outboard gear.

Standby Mode

In order to save power, the MediaOne BT speakers will go into Standby mode when no signal is present at any time for longer than 30 minutes. The front panel Power Indicator will turn off, even with Power Switch in the On position. The speakers will automatically wake up when you pass signal through the inputs.

Adding an Active Subwoofer

Adding a subwoofer to extend the low frequency response of your monitor system can be beneficial when mixing your music. Typically, it is best to set the subwoofer level to be equal to that of the main speakers. Because deep-bass frequencies are non-directional, it is difficult for our ears to locate the sound source, and the precise placement of the subwoofer is not as critical as the main speakers. The ideal location is between the two main speakers. If you notice there are frequencies that sound quieter than others, move the subwoofer slightly to the left or right.

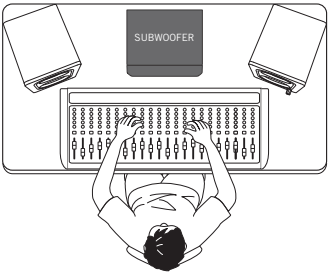

To add a powered subwoofer to your MediaOne BT speakers to create a 2.1 system:

- Connect your audio source to the left and right RCA Inputs of the MediaOne BT.
- Connect the MediaOne BT 1/8" STEREO / SUB Output to the left and right line inputs of your active subwoofer.
- Play music from your audio source.
- Turn up your MediaOne BT to your desired listening level.
- Turn up the level of the subwoofer to desired level.

Note: The MediaOne BT front panel Volume control will control the level of the entire system.

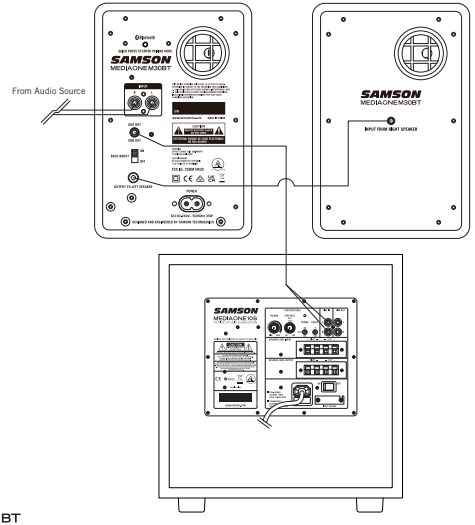

Positioning the Speakers

A major objective when setting up your studio monitors is to obtain the best possible stereo image. The MediaOne BT monitors are designed to be used in a vertical position, with the tweeter and woofer symmetrically in line. Do not place these speakers horizontally as this will cause an offset in sound between the woofer and the tweeter, limiting your ability to find optimal listening positions.

Near field (close to the listener) monitoring has become the choice of many engineers because of the cost and complexities associated with mounting monitors onto a wall. Positioning your studio monitors correctly is very important. Correct placement not only creates the proper stereo image, but also minimizes the effects of your room's reflections. This is especially important in today's project studios, which are often multi-use spaces. By taking some time and listening carefully when setting up your monitors, you can create an optimal listening environment.

The most important consideration when evaluating room acoustics is the presence of reflective surfaces near the monitoring area. These can include flat tabletops, glass mirrors or framed pictures, large open walls and even the surface of your mixing console. Most reflecting sound will eventually reach the listening position, but since it is slightly delayed from the direct source, the result is random cancellation of some frequencies, or comb filtering. If possible, remove any and all reflective surfaces. You may also want to hang some acoustic foam on walls near the monitors.

When positioning the monitors, you'll want to set up what is commonly referred to as the "mix triangle" (shown below). In this ideal configuration, the space between the left and right monitor is equal to the distance from the listener to each monitor, forming an equilateral triangle.

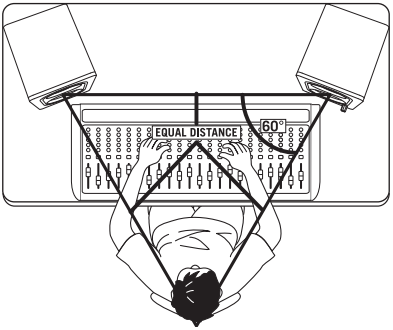

Having Trouble with your MediaOne Monitor Speakers? We can help!

CONTACT OUR SUPPORT TEAM: support@samsontech.com
Our experts can help you resolve any issues.

Follow us:

@samson @samsontech @samson_technologies

Specifications - M30BT

Low Frequency Speakers	3” (76.2mm) woofer, woven carbon fiber with butyl surround
High Frequency Speakers	3/4” silk dome tweeter
Frequency response	50Hz - 20kHz (-2dB)
Amplifier Power Rating	2 x 10 watts
Distortion (T.H.D.)	<0.1%
Signal-To-Noise	83dB
Input Connectors	RCA (rear panel)
Headphone	1/8” (3.5mm) Stereo Output
Stereo / Sub Output	1/8” (3.5mm)
Bluetooth	V5.1+BR+EDR
Controls	Power / Volume Knob, Bass Boost Switch
Indicators	White (Power), Blue (Paired)
Enclosure	MDF with textured vinyl covering
Dimensions (LxWxH)	5” x 6.5” x 7.48” 127mm x 165mm x 190mm
Weight	6.61 lb 3 kg

Specifications - M50BT

Low Frequency Speakers	5.25” (134.09mm) woofer, woven carbon fiber with butyl surround
High Frequency Speakers	3/4” silk dome tweeter
Frequency response	50Hz - 20kHz (-2dB)
Amplifier Power Rating	2 x 40 watts
Distortion (T.H.D.)	<0.1%
Signal-To-Noise	83dB
Input Connectors	RCA (rear panel)
Headphone	1/8” (3.5mm) Stereo Output
Stereo / Sub Output	1/8” (3.5mm)
Bluetooth	V5.1+BR+EDR
Controls	Power/Volume Knob, Bass Boost Switch, Pair Button
Indicators	White (Power), Blue (Paired)
Enclosure	MDF with textured vinyl covering
Dimensions (LxWxH)	7.1” x 8.24” x 10.75” 180mm x 209mm x 273mm
Weight	14.33 lb 6.5 kg

At Samson, we are continually improving our products, therefore specifications and images are subject to change without notice.

Samson Technologies Corp.
278-B Duffy Ave
Hicksville, New York 11801
www.samsontech.com