STAGE 200

DUAL-CHANNEL VHF WIRELESS SYSTEM

OWNER'S MANUAL

SAMSON®

Important Safety Information

ATTENTION
RISQUE DE CHOC ÉLECTRONIQUE -
NE PAS OUVRIR

This lightning flash with arrowhead symbol within an equilateral triangle is intended to alert the user to the presence of non-insulated “dangerous voltage” within the product’s enclosure that may be of sufficient magnitude to constitute a risk of electric shock.

The exclamation point within an equilateral triangle is intended to alert the user to the presence of important operating and maintenance instructions in the literature accompanying the appliance.

WARNING: TO REDUCE THE RISK OF ELECTRIC SHOCK, DO NOT REMOVE COVER (OR BACK) AS THERE ARE NO USER-SERVICEABLE PARTS INSIDE. REFER SERVICING TO QUALIFIED SERVICE PERSONNEL.

If you want to dispose this product, do not mix it with general household waste. There is a separate collection system for used electronic products in accordance with legislation that requires proper treatment, recovery and recycling.
Private household in the 28 member states of the EU, in Switzerland and Norway may return their used electronic products free of charge to designated collection facilities or to a retailer (if you purchase a similar new one).
For Countries not mentioned above, please contact your local authorities for a correct method of disposal.
By doing so you will ensure that your disposed product undergoes the necessary treatment, recovery and recycling and thus prevent potential negative effects on the environment and human health.

YOU CAN HELP TO PROTECT THE ENVIRONMENT!

Please remember to respect the local regulations: Hand in the non-working electrical equipment to an appropriate waste disposal center.

Important Safety Information

FCC Rules and Regulations

Samson wireless receivers are certified under FCC Rules part 15 and transmitters are certified under FCC Rules part 74.
Licensing of Samson equipment is the user's responsibility and licensability depends on the user's classification, application and frequency selected.

NOTE: This equipment has been tested and found to comply with the limits for a Class B digital device, pursuant to part 15 of the FCC Rules. These limits are designed to provide reasonable protection against harmful interference in a residential installation. This equipment generates, uses and can radiate radio frequency energy and, if not installed and used in accordance with the instructions, may cause harmful interference to radio communications. However, there is no guarantee that interference will not occur in a particular installation. If this equipment does cause harmful interference to radio or television reception, which can be determined by turning the equipment off and on, the user is encouraged to try to correct the interference by one or more of the following measures:

- Reorient or relocate the receiving antenna.
- Increase the separation between the equipment and receiver.
- Connect the equipment into an outlet on a circuit different from that to which the receiver is connected.
- Consult the dealer or an experienced Radio/TV technician for help.

The device has been evaluated to meet general RF exposure requirement.
To maintain compliance with FCC's RF exposure guidelines, this equipment should be installed and operated with a minimum distance of 5mm between the radiator and your body.

The manufacturer is not responsible for any radio or TV interference caused by unauthorized modifications or change to this equipment. Such modifications or change could void the user's authority to operate the equipment.
This radio transmitter (identify the device by certification number or model number if Category II) has been approved by Industry Canada to operate with the antenna types listed below with the maximum permissible gain indicated. Antenna types not included in this list, having a gain greater than the maximum gain indicated for that type, are strictly prohibited for use with this device.

This device complies with Part 15 of the FCC rules and Industry Canada license-exempt RSS standard(s).

Operation is subject to the following two conditions:
(1) this device may not cause harmful interference, and
(2) this device must accept any interference received, including interference that may cause undesired operation.

WARNING: Changes or modifications not expressly approved by the party responsible for compliance could void the user's authority to operate the equipment.

Important Safety Information

1. Read these instructions.
2. Keep these instructions.
3. Heed all warnings.
4. Follow all instructions.
5. Do not use this apparatus near water.
6. Clean only with dry cloth.
7. Do not block any ventilation openings. Install in accordance with the manufacturer's instructions.
8. Do not install near any heat sources such as radiators, heat registers, stoves, or other apparatus (including amplifiers) that produce heat.
9. Do not defeat the safety purpose of the polarized or grounding type plug. A polarized plug has two blades with one wider than the other. A grounding type plug has two blades and a third grounding prong. The wide blade or the third prong are provided for your safety. If the provided plug does not fit into your outlet, consult an electrician for replacement of the obsolete outlet.
10. Protect the power cord from being walked on or pinched particularly at the plugs, convenience receptacles, and at the point where they exit from the apparatus.
11. Only use attachments/accessories specified by the manufacturer.
12. Use only with the cart, stand, tripod, bracket, or table specified by the manufacturer, or sold with the apparatus. When a cart is used, use caution when moving the cart/apparatus combination to avoid injury from tip-over.

13. Unplug the apparatus during lightening storms, or when unused for long periods of time.
14. Refer all servicing to qualified personnel. Service is required when the apparatus has been damaged in any way, such as power supply cord or plug is damaged, liquid has been spilled or objects have fallen into the apparatus has been exposed to rain or moisture, does not operate normally, or has been dropped.
15. This appliance shall not be exposed to dripping or splashing water and that no object filled with liquid such as vases shall be placed on the apparatus.
16. Caution-to prevent electrical shock, match wide blade plug wide slot fully insert.
17. Please keep a good ventilation environment around the entire unit.
18. The direct plug-in adapter is used as disconnect device, the disconnect device shall remain readily operable.
19. Batteries (battery pack or batteries installed) shall not be exposed to excessive heat such as sunshine, fire or the like.
20. The AC plug considered as disconnect device of adapter.

Introduction

Congratulations on purchasing the Samson Stage 200 Dual Microphone Wireless System! The Stage 200 system is the perfect solution for any application requiring two high quality, wireless microphones in an easy to use package. The system features the SR200 dual channel receiver with individual and mixed outputs. Also included are two VH200 handheld microphone transmitters.

With the Stage 200 system, you'll have great sound quality with clear reception, and the ability to walk freely around your venue. For any live sound application (karaoke, presentation, education, house of worship, etc.) the Stage 200 is the ideal tool for your dual-performer needs. The Stage 200 provides outstanding performance and reliability.

Although this product is designed for intuitive operation, we suggest you take some time to go through these pages to learn how we've implemented a number of unique features, and to get step-by-step instructions for setting up your system. If your Stage 200 was purchased in the United States, you'll also find a warranty card enclosed—please don't forget to follow the instructions so that you can receive online technical support, and so that we can send you updated information about this and other Samson products. Also, be sure to check out our website (www.samsontech.com) for complete information about our full product line.

We recommend that you record your serial number in the space provided below, for future reference.

Serial number:_____

Date of purchase:_____

Should your unit ever require servicing, a Return Authorization (RA) number must be obtained before shipping your unit to Samson. Without this number, the unit will not be accepted. Please call Samson at 1-800-3SAMSON (1-800-372-6766) for an RA number prior to shipping your unit. Please retain the original packing materials and, if possible, return the unit in the original carton. If you purchased your Samson product outside the United States, please contact your local distributor for warranty information and service.

Features

- Professional, dual-handheld wireless system
- Easy setup and operation
- Individual ¼" and mixed XLR outputs
- Up to 200' of line-of-sight operating range
- Two professional VH200 handheld transmitters with Q6 Dynamic Microphone capsules
- Up to 10 hours of battery life, using two standard AA batteries

SR200 Receiver Front Panel Features

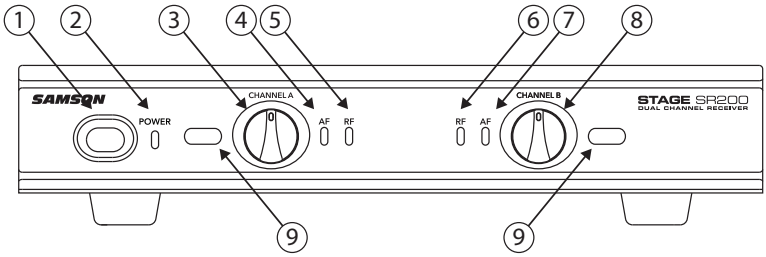

1. **Power Switch -** Press to turn the receiver on or off.
2. **POWER Indicator -** Lights red when the receiver is powered on.
3. **Volume Control (Channel A) -** Rotate to adjust the level of the audio signal output from the Channel A receiver.
4. **Channel A AF Indicator -** Lights green when the corresponding Channel A VH200 transmitter is powered on, and there is an audio signal present and detected by the receiver. The indicator lights red when the transmitted audio signal is overloaded.
5. **Channel A RF Indicator -** Lights orange when the corresponding Channel A VH200 transmitter is powered on, and there is an RF signal present and detected by the receiver.
6. **Volume Control (Channel B) -** Rotate to adjust the level of the audio signal output from the Channel B receiver.
7. **Channel B AF Indicator -** Lights green when the corresponding Channel B VH200 transmitter is powered on, and there is an audio signal present and detected by the receiver. The indicator lights red when the transmitted audio signal is overloaded.
8. **Channel B RF Indicator -** Lights orange when the corresponding Channel B VH200 transmitter is powered on, and there is an RF signal present and detected by the receiver.
9. **Channel Label -** The channel label designates the operating channel and frequency. The label color matches the label color of the corresponding handheld microphone transmitter. See the chart below for the available channels:

Receiver	Channel / Frequency	Color
A	CH 37 / 207.675 MHz	Green
B	CH 38 / 184.35 MHz	Purple

SR200 Receiver Rear Panel Features

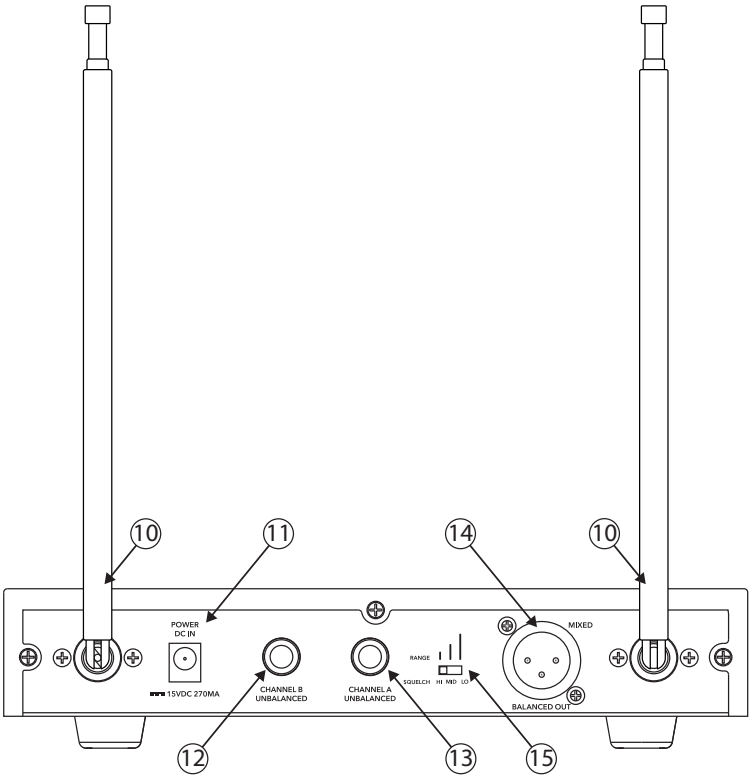

9. **Antenna -** The antenna mountings allow full rotation for optimum placement. In normal operation, both antennas should be placed in a vertical position. The antennas can be folded down for convenience when transporting the SR200.

10. **DC Input -** Connect the supplied 15-volt adapter here.
WARNING: Do not substitute any other kind of power adapter. Doing so can cause damage to the SR200 and will void your warranty.

11. **Channel A Output -** Use this unbalanced, ¼" jack to connect the SR200 Channel A receiver to the line level input of a mixer, amplifier, or other audio equipment.

12. **Channel B Output -** Use this unbalanced, ¼" jack to connect the SR200 Channel B receiver to the line level input of a mixer, amplifier, or other audio equipment.

13. **MIXED OUT -** This balanced, low impedance XLR jack carries a mix of both the Channel A and Channel B receivers.

14. **SQUELCH Switch -** This control determines the maximum range of the system before audio signal dropout. Although it can be adjusted, it should normally be left at its factory setting.

VH200 Transmitter Controls and Features

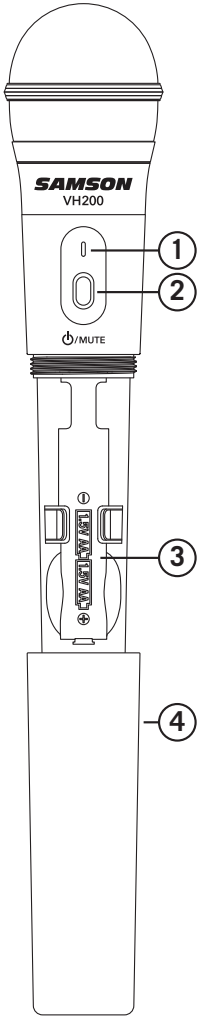

1. **Status Indicator -** This LED displays the operation mode:

Green	Normal Operation
Amber	Mute
Red	Low Battery

2. **Power/Mute Switch -** Press and hold to turn the unit on or off. Press and release to mute or unmute the transmitter.
3. **Battery Compartment -** Insert two standard AA (LR6) batteries here, being sure to observe the plus and minus polarity markings shown. Although rechargeable Ni-Cad batteries can be used, they do not supply adequate current for more than four hours.
   WARNING: Do not insert the battery backwards; doing so can cause severe damage to the VH200 and will void your warranty.
4. **Battery Cover -** Unscrew the battery cover and slide down to open the VH200 battery compartment.

Squelch Control

The Squelch circuit mutes the audio output of the receiver when the radio signal is below the squelch setting. Setting the squelch control to the lowest setting will provide the greatest range, but when the transmitter signal is lost, the receiver may pass background noise. As the setting is increased, the range may be reduced, but it will reduce the likelihood of passing noise through the audio system.

Checking the Squelch Setting

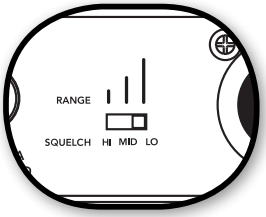

Temporarily turn down the level of your mixer/amplifier system and turn off the power to your transmitter, leaving the SR200 on. Then restore the previously set level of your mixer/amplifier. With the transmitter off, the receiver output should be totally silent, if it is, skip ahead to the next step. If it isn't (that is, if you hear some noise), you may need to adjust the receiver's rear panel Squelch control. When the Squelch control is at the "LO" setting, the Stage 200 system provides maximum range without dropout; however, depending upon the particular environment your system is used in, you may need to reduce that range somewhat in order to eliminate band noise or interference when the transmitter is turned off. To do so, move Squelch switch to the "MID" or "HI" position until the noise disappears. If no noise is present at any position, leave it at its "LO" position (so as to have the greatest overall range available).

Quick Start Guide

Follow these basic procedures for setting up and using your Stage 200 Wireless System.

1. Connect the SR200 receiver power adaptor to the rear panel DC input, and then to an electrical outlet. Fully extend the antennas vertically.

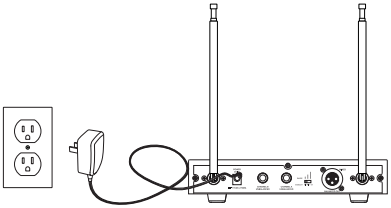

2. Connect the receiver's appropriate ¼" outputs to the input of a mixer, stereo, karaoke machine, or any other line level input.

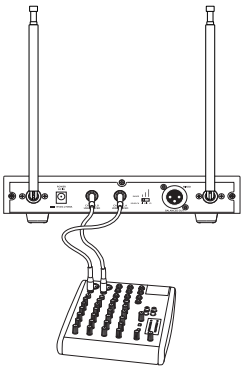

3. With the transmitter powered off, rotate the bottom section and slide down to expose the battery compartment. install two fresh AA batteries into the VH200 handheld transmitter.

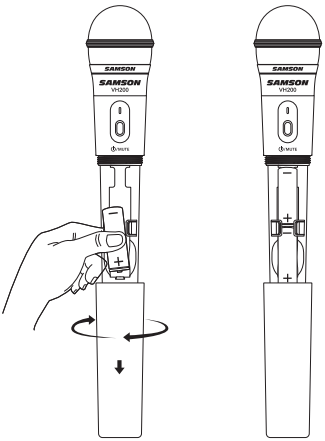

4. Place the SR200 receiver where it will be used (the general rule of thumb is to maintain "line of sight" between the receiver and transmitters so that the person(s) using the transmitter can see the receiver). Turn on the power of the SR200 receiver.

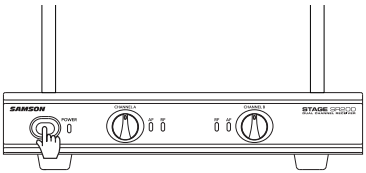

Quick Start Guide

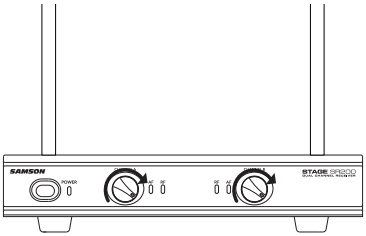

5. Turn on the connected amplifier and/or mixer, but keep its volume all the way down. Next, make sure that your transmitter is un-muted and set the Volume Control knob on the SR200 fully clockwise; this is unity gain. Speak or sing into the mic at a normal performance level while slowly raising the volume of your amplifier/mixer until the desired level is reached.
6. If you hear distortion at the desired volume level (or if the AF indicator is flashing red), make sure that the gain structure of your audio system is correctly set (consult the owners manual of your mixer and/or amplifier for details). If you still hear distortion, lower the Volume knob of the SR200 in order to further attenuate the output signal.
7. When first setting up the Stage 200 System in a new environment, it is a good idea to do a walk-around in order to make sure that coverage is provided for your entire performance area. Accordingly, turn down the level of your audio system and turn on both the transmitter and receiver. Then, with the transmitter un-muted, restore the level of your audio system. While speaking or singing, walk through the entire area that will need to be covered. As you do so, the “RF” LED on the front panel of the SR200 should always remain lit. Always try to minimize the distance between transmitter and receiver as much as possible so that the strongest possible signal is received from all planned transmission points.

Microphone Usage

The VH200 microphone is **unidirectional,** which means it picks up sound from the front of the microphone and rejects sound from the rear. This will help reduce the chance of feedback. In general, you can avoid feedback by taking care not to point the microphone directly in front of a speaker (if this is unavoidable, try using an equalizer to attenuate high- or mid-range frequencies which can cause feedback or “squealing”).

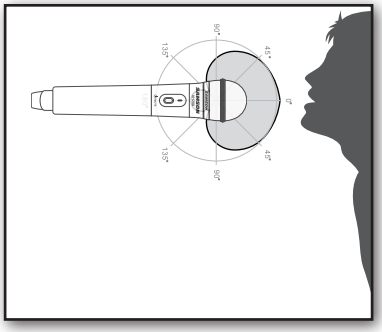

Specifications

OVERALL SYSTEM SPECIFICATIONS:

Operating Frequency	VHF 177MHz to 213.74MHz
Number of Channels	Fixed channel
Frequency Stability	±0.005%
Modulation Mode	FM
Maximum Deviation	±30 kHz
Operating Range	50 meter
Operating Temperature Range	14° F (-10° C) to 140° F (60° C)
Working Humidity	65 ±20%RH
Frequency Response	80 Hz to 15kHz

Stage 200 RECEIVER SPECIFICATION

Image Rejection	35 dB
Dynamic Range	100 dB
Maximum Output	1.37V
Sensitivity	-100dBm@30dB SINAD
Output Connectors	Two 6.3mm unbalanced, One XLR balanced
Audio Output Levels	-12dB
Power Supply	100-240V ~50/60Hz, 0.4A;Output: DC 15V,800mA
Dimensions	8.25” x 5.7” x 1.4” 210mm x 145mm x 36mm
Net Weight	1.32lb 0.6kg

VH200 TRANSMITTER SPECIFICATIONS

RF Power Output	25mW
Microphone Element	Dynamic
Typical Battery Life	12 hours
Current Consumption	100 mA typical
Dimensions	ø2.2” x 10” ø55mm x 255mm
Net Weight	0.49lb 0.22kg

At Samson, we are continually improving our products, therefore specifications and images are subject to change without notice.

Troubleshooting

Issue	Solutions
No Audio	Turn on the VH200 transmitter using the Power/Mutr switch.
	Ensure the VH200 transmitter's batteries are installed correctly.
	Confirm that the SR200 adaptor is correctly connected and plugged into an electrical outlet.
	Turn on the SR200 receiver.
	Make sure the SR200 output and audio input connections are securely connected.
	Ensure that the SR200 receiver and VH200 transmitters are in line of sight with one another.
	Check the receiver and audio input device level controls.
Distorted Audio	Check the receiver output level and audio input device level.
	Check the VH200's batteries and replace if low.
	Another transmitter may be broadcasting on the same channel. Turn off transmitter that may be causing interference.
Audio Dropout	The transmitter may be too far away from the receiver. Move closer to the receiver, or reposition the antennas.
	Remove any sources that may cause RF interference, such as cell phones, cordless phones, lighting equipment, computers, etc.
Transmitters and Receiver on Different Channels	Contact your Samson reseller or distributor for assistance.

R&TTE Declaration of Conformity

In accordance with EN ISO 17050:2005

We, Samson Technologies Corporation, located at 45 Gilpin Ave, Hauppauge, NY 11788 USA declare under our own responsibility that the products:

Product Name: Stage 200 Wireless Microphone System
Trade Name: Samson
Type or Model: SR200 (Receiver), VH200 (Handheld Transmitter)

are in conformity with the essential requirements of the following EC Directive(s) when installed in accordance with the installation instructions contained in the product documentation:
2006/95/EC - LVD Directive
2004/108/EC - EMC Directive
1999/5/EC - R&TTE Directive

The product is in conformity with the following standards and/or other normative documents:

EN60065:2014	Audio, video and similar electronic apparatus - Safety requirements
EN301 489-1 V1.9.1	Common technical requirements.
EN301 489-9 V1.4.1	Specific conditions for wireless microphones, similar Radio Frequency (RF) audio link equipment, cordless audio and in-ear monitoring.
EN300 422-1 V1.5.1	Technical characteristics and methods.
EN300 422-2 V1.4.1	Harmonized EN covering essential requirements of article 3.2 of the R&TTE directive
EN62479:2010	Harmonized EN covering essential requirements of article 3.1a of the R&TTE directive

Year of CE Marking (Low Voltage Directive): 2016
Identification Mark: **0700** *(Notified body number)*
This equipment will also carry the Class 2 equipment identifier:

Signed on behalf of the manufacturer:
Authorized Representative: Douglas Bryant
Position: Vice President Engineering
Date: 2/25/2016

CE0700

Hereby, Samson Technologies Corp., declares that this Stage 200 (RX: SR200, TX: VH200) is in compliance with the essential requirements and other relevant provisions of Directive 1999/5/EC. The declaration of conformity may be consulted at:
www.samsontech.com/samson/products/wireless-systems/stage-series/stage200/#downloads-and-manuals-tab

Samson Technologies
45 Gilpin Avenue
Hauppauge, New York 11788-8816
Phone: 1-800-3-SAMSON (1-800-372-6766)
Fax: 631-784-2201
www.samsontech.com