EXPEDITION

XP300

300-WATT PORTABLE PA SYSTEM

Owner's Manual

SAMSON®

Important Safety Information

ATTENTION
RISQUE DE CHOC ÉLECTRONIQUE -
NE PAS OUVRIR

This lightning flash with arrowhead symbol within an equilateral triangle is intended to alert the user to the presence of non-insulated “dangerous voltage” within the product’s enclosure that may be of sufficient magnitude to constitute a risk of electric shock.

The exclamation point within an equilateral triangle is intended to alert the user to the presence of important operating and maintenance instructions in the literature accompanying the appliance.

CAUTION
To prevent electric shock hazard, do not connect to mains power supply while grille is removed.

WARNING: TO REDUCE THE RISK OF ELECTRIC SHOCK, DO NOT REMOVE COVER (OR BACK) AS THERE ARE NO USER-SERVICEABLE PARTS INSIDE. REFER SERVICING TO QUALIFIED SERVICE PERSONNEL.

If you want to dispose this product, do not mix it with general household waste. There is a separate collection system for used electronic products in accordance with legislation that requires proper treatment, recovery and recycling.
Private household in the 28 member states of the EU, in Switzerland and Norway may return their used electronic products free of charge to designated collection facilities or to a retailer (if you purchase a similar new one).
For Countries not mentioned above, please contact your local authorities for a correct method of disposal.
By doing so you will ensure that your disposed product undergoes the necessary treatment, recovery and recycling and thus prevent potential negative effects on the environment and human health.

Copyright 2017, v1
Samson Technologies Corp.
278-B Duffy Ave
Hicksville, New York 11801
Phone: 1-800-3-SAMSON (1-800-372-6766)
Fax: 631-784-2201
www.samsontech.com

The *Bluetooth®* word mark and logos are registered trademarks owned by Bluetooth SIG, Inc. and any use of such marks by Samson Technologies is under license. Other trademarks and trade names are those of their respective owners.”

Important Safety Information

1. Read these instructions.
2. Keep these instructions.
3. Heed all warnings.
4. Follow all instructions.
5. Do not use this apparatus near water.
6. Clean only with dry cloth.
7. Do not block any ventilation openings. Install in accordance with the manufacturer's instructions.
8. Do not install near any heat sources such as radiators, heat registers, stoves, or other apparatus (including amplifiers) that produce heat.
9. Do not defeat the safety purpose of the polarized or grounding type plug. A polarized plug has two blades with one wider than the other. A grounding type plug has two blades and a third grounding prong. The wide blade or the third prong are provided for your safety. If the provided plug does not fit into your outlet, consult an electrician for replacement of the obsolete outlet.
10. Protect the power cord from being walked on or pinched particularly at the plugs, convenience receptacles, and at the point where they exit from the apparatus.
11. Only use attachments/accessories specified by the manufacturer.
12. Use only with the cart, stand, tripod, bracket, or table specified by the manufacturer, or sold with the apparatus. When a cart is used, use caution when moving the cart/apparatus combination to avoid injury from tip-over.

13. Unplug the apparatus during lightening, sort or when unused for long periods of time.
14. Refer all servicing to qualified personnel. Service is required when the apparatus has been damaged in any way, such as power supply cord or plug is damaged, liquid has been spilled or objects have fallen into the apparatus has been exposed to rain or moisture, does not operate normally, or has been dropped.
15. This appliance shall not be exposed to dripping or splashing water and that no object filled with liquid such as vases shall be placed on the apparatus.
16. Caution-to prevent electrical shock, match wide blade plug wide slot fully insert.
17. Please keep a good ventilation environment around the entire unit.
18. POWER ON/OFF SWITCH: For products with a power switch, the power switch DOES NOT break the connection from the mains.
19. MAINS DISCONNECT: The plug should remain readily operable. For rack-mount or installation where plug is not accessible, an all-pole mains switch with a contact separation of at least 3mm in each pole shall be incorporated into the electrical installation of the rack or building.

Important Safety Information

FCC Notice

1. This device complies with Part 15 of the FCC Rules. Operation is subject to the following two conditions:
   (1) This device may not cause harmful interference.
   (2) This device must accept any interference received, including interference that may cause undesired operation.
2. Changes or modifications not expressly approved by the party responsible for compliance could void the user's authority to operate the equipment.

FCC Statement

This equipment has been tested and found to comply with the limits for a Class B digital device, pursuant to Part 15 of the FCC Rules. These limits are designed to provide reasonable protection against harmful interference in a residential installation.

This equipment generates uses and can radiate radio frequency energy and, if not installed and used in accordance with the instructions, may cause harmful interference to radio communications. However, there is no guarantee that interference will not occur in a particular installation. If this equipment does cause harmful interference to radio or television reception, which can be determined by turning the equipment off and on, the user is encouraged to try to correct the interference by one or more of the following measures:

- Reorient or relocate the receiving antenna.
- Increase the separation between the equipment and receiver.
- Connect the equipment into an outlet on a circuit different from that to which the receiver is connected.
- Consult the dealer or an experienced radio/TV technician for help.

FCC Radiation Exposure Statement

This equipment complies with FCC RF radiation exposure limits set forth for an uncontrolled environment.

RF Warning Statement

The device has been evaluated to meet general RF exposure requirement. The device can be used in portable exposure condition without restriction.

Introduction

Congratulations on purchasing the Expedition XP300 Portable PA System from Samson! The XP300 is a compact, all-in-one, portable PA system featuring a six-channel mixer and 300 watts of onboard power with dual 6” 2-way speakers, making it an ideal solution for a variety of small- to medium-sized sound reinforcement applications. The XP300 is also extremely portable, thanks to its lightweight and unique “Slide and Lock” design.

The six-channel mixer can be removed from the speaker for tabletop use or can be stand mounted using the Samson SMS150 Mixer Stand Holder. It features two XLR inputs for connecting microphones, one channel for connecting a stereo signal from an MP3 player, or other electronic device. There’s also a built-in, 24-bit digital effects processor to add studio quality effects to your voice or instruments. For music playback, the XP300 features wireless *Bluetooth*® connectivity, to stream audio from your smart phone, tablet, or computer. The mixer provides a robust output, with 300 watts total power from the lightweight, Class D amplifier section. The XP300 employs a matched speaker system with dual 2-way enclosures that have proprietary 6” woofers and 1” high frequency drivers. To help project sound to a larger audience, the XP300 speakers can be mounted on standard speaker stands, thanks to the integral pole mount receptacles. The XP300 is constructed using durable ABS high impact plastic, making it super road tough and, at the same time, lightweight.

We recommend you keep the following records for reference, as well as a copy of your sales receipt.

Transmitter & Receiver Serial number: _____

Date of purchase: _____

If you have any questions or comments regarding the XP300 Portable PA System or any other products from Samson, do not hesitate to contact us at **support@samsontech.com**.

With proper care and maintenance, your XP300 Portable PA System will operate trouble-free for many years. Should your XP300 Portable PA System ever require servicing, a Return Authorization (RA) number must be obtained before shipping your unit to Samson. Without this number, the unit will not be accepted. Please visit **www.samsontech.com/ra** for an RA number prior to shipping your unit. Please retain the original packing materials and, if possible, return the unit in its original carton. If your XP300 Portable PA System was purchased outside of the United States, contact your local distributor.

Features

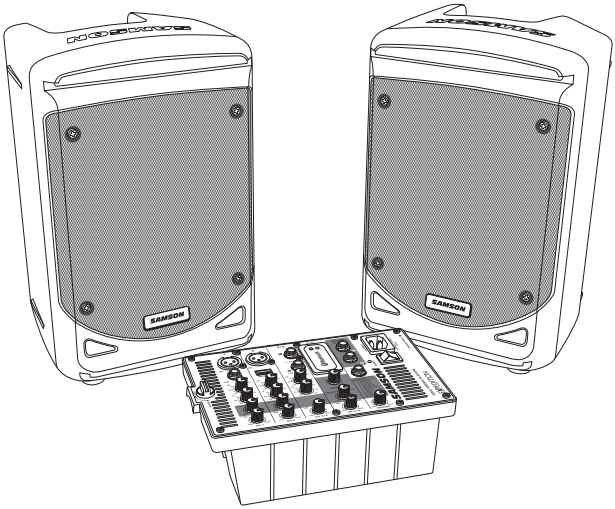

- Compact stereo PA system with onboard mixer, and 300 watt power amplifier that packs up into a single case.
- 2-way vented speaker enclosures with 6” woofers and 1” high frequency drivers.
- Internal 2 x 150 watt lightweight Class D power amplifier.
- Removable six channel mixer with two Mic inputs, USB Wireless mic input, Stereo Line Input channel and *Bluetooth®*
- Bass and Treble controls on the first three input channels.
- USB jack for connecting a Samson XPD Wireless microphone receiver.
- Sixteen, 24-bit digital effects.
- *Bluetooth®* connectivity allows you to stream wireless audio from your smartphone, tablet, or computer.
- Sub output allows for connecting an active subwoofer to expand the system.
- Includes 2 x 10’ speaker cables.

Getting Started

1. Remove the mixer by turning the quarter turn screw counterclockwise towards the RELEASE position.

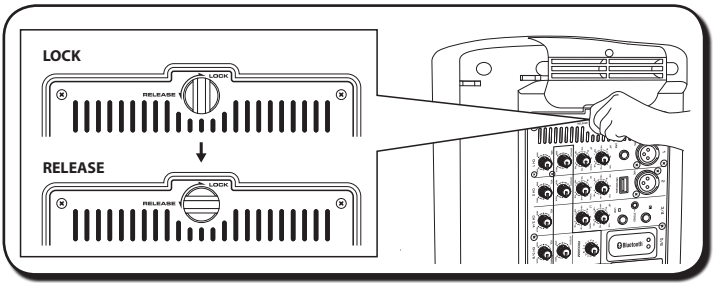

2. Carefully hold the mixer to remove it from the speaker.

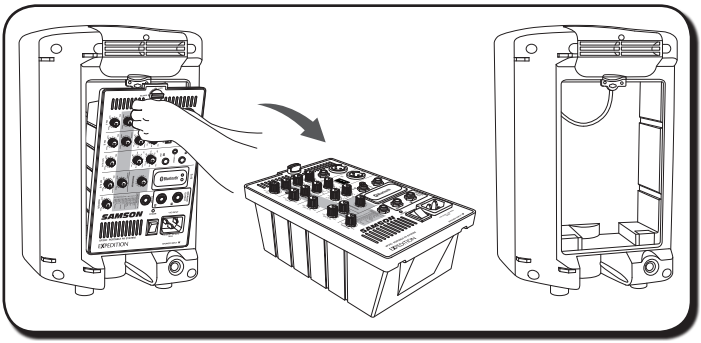

3. Remove the accessory compartment cover by turning the quarter turn screw counterclockwise towards the RELEASE position, and remove the included AC and speaker cables.
4. Replace the accessory panel by aligning the bottom of the panel with the slots. Make sure the quarter turn screw is in the RELEASE position; then close the panel and turn the quarter turn screw clockwise to LOCK.

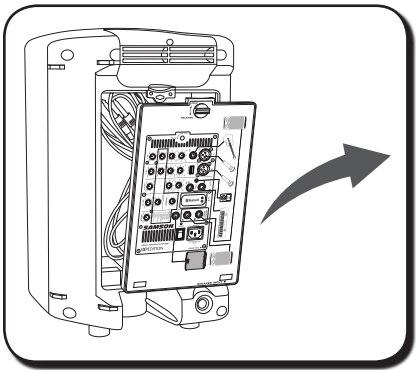

Getting Started

5. Position the speakers on the floor or on standard speaker stands.

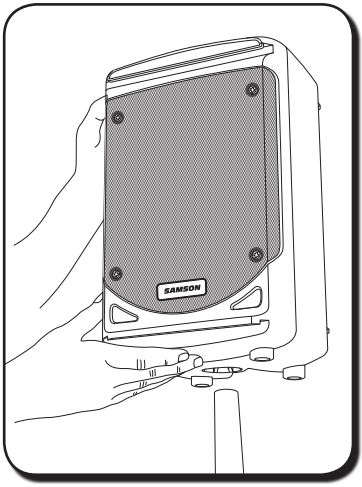

6. Using one of the included speaker cables, connect the mixer's LEFT SPEAKER OUT to the left speaker's input connector. Next, use the second included speaker cable to connect the RIGHT SPEAKER OUT to the right speaker's input connector.

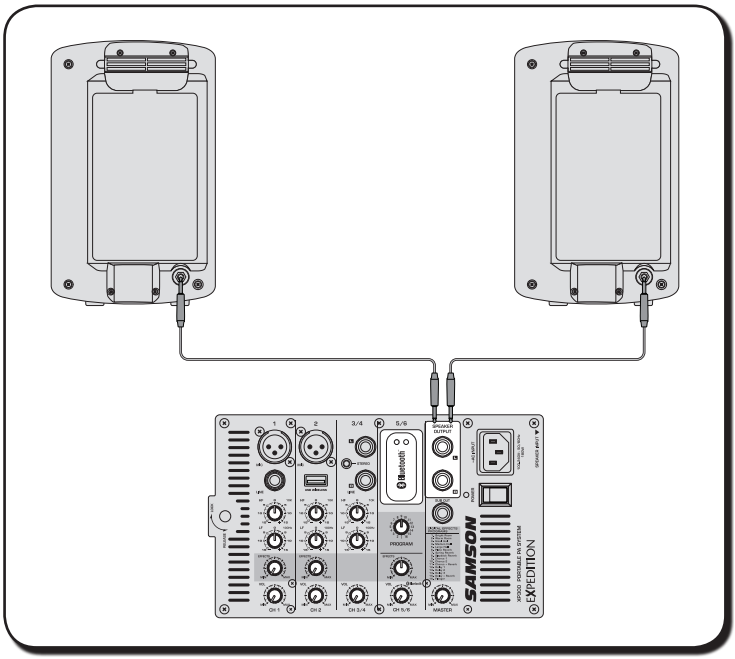

Quick Start

1. Be sure that the XP300's POWER switch is set to the OFF position.
2. Turn each of the channel LEVEL and MASTER volume controls fully counterclockwise, to the "0" position.
3. Next, connect one side of the included power cable to the XP300 mixer's power inlet and the other to a grounded AC power outlet.
4. Connect your microphones using standard XLR cables, instruments using 1/4" phone cables, and MP3 player using 1/8" cable, into the appropriate jacks on the mixer.
5. If using a Samson XPD Wireless Microphone ssytem, plug the receiver into the CH 2 USB jack.
6. Switch on all equipment connected to the XP300 first, then switch the XP300's POWER switch to the ON position.

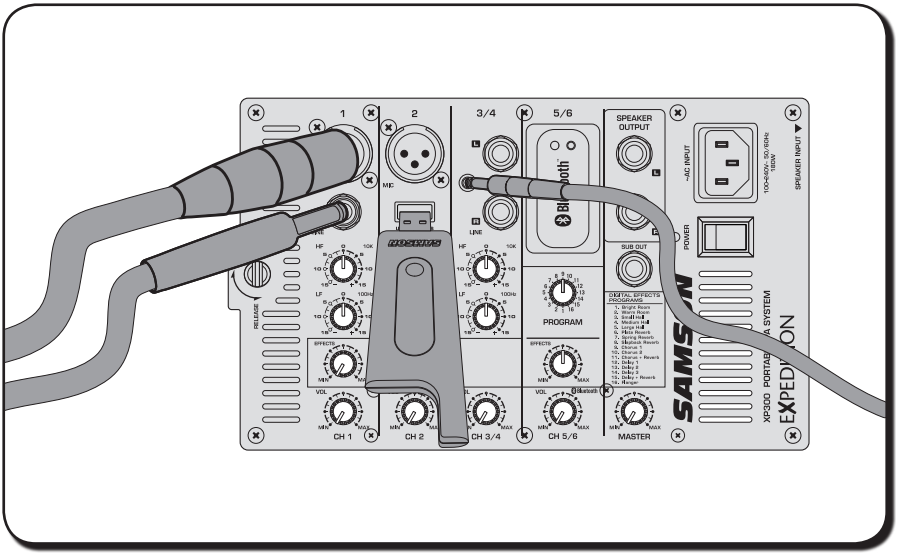

7. Turn the MASTER level control about 1/2 of the way up.
8. Start talking or playing into channel 1 while slowly adjusting the LEVEL control until you have reached the desired level. Do the same for each channel you are using.
9. If you notice that the LIMITER indicator is lighting constantly, turn the MASTER volume down so that the indicator only lights occasionally during loud hits.

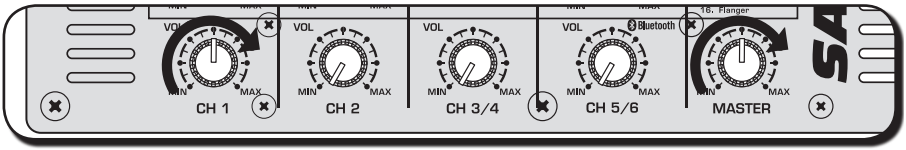

Quick Start

To add depth to the mix or smooth out vocals, you can apply effects such as reverb to the first two channels. To do this:

10. Use the PROGRAM selector to choose one of the 16 built-in digital effects.

11. Raise the EFFECTS level controls on the channel(s) to which you would like to add the effect.

12. Slowly turn up the effects SEND knob until the desired sound is reached.

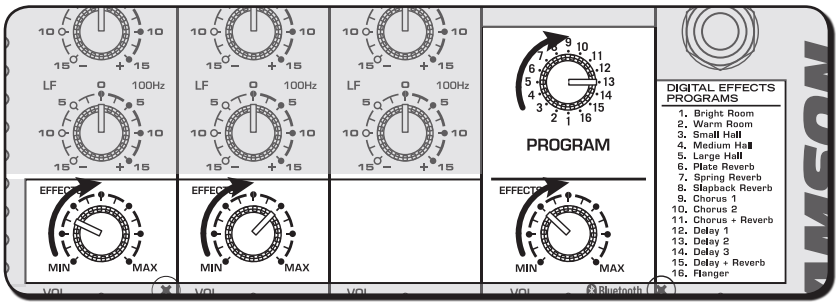

The XP300 input channels feature a 2-band equalizer allowing you to adjust the tonal characteristic of the signal. You can independently adjust the bass and treble frequencies on each channel. The channel's frequency response is flat when the knobs are in the 12 o'clock position.

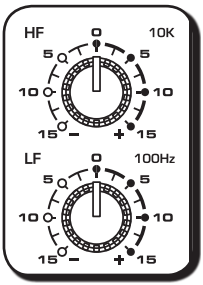

13. If you find the audio too muddy, you may want to reduce the LF (low frequency) control.

14. If you find that the audio sounds dull, you can increase the HF (high frequency) control. There is no right or wrong way to EQ a sound. You should listen to how the mix sounds in the room and fine-tune to your liking.

Pairing with a Bluetooth® device

Bluetooth® **is a wireless communication technology that allows for connectivity between a wide range of devices. In order for your device to work with the XP300 it must first be paired.**

1. Turn all channel LEVEL controls down counterclockwise to **0**.
2. With the XP300 and your *Bluetooth* device powered on; press the PAIR button on the top panel of the XP300 mixer to make the speaker discoverable. The *Bluetooth* indicator will slowly flash blue.
3. In the settings of your *Bluetooth* device, set it to “discover” available devices.
4. From the *Bluetooth* device list, select the “Samson XP300” device.
5. If your device asks for a passkey, enter digits 0000 (four zeros) and press OK. Some devices may also ask you to accept the connection.
6. As the XP300 is connecting to your device, the *Bluetooth* indicator will quickly flash blue.
7. The XP300 speaker indicates that pairing is complete when the indicator turns steady blue. You can now stream audio from your device to the XP300 speakers.
8. With the volume control on your *Bluetooth* device turned up, play some music, and slowly raise the XP300 BLUETOOTH channel 5/6 LEVEL control until you have reached the desired level.

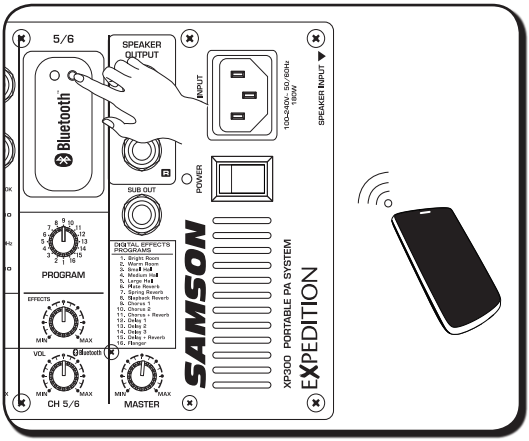

Configuring the XP300 for Transport

You can easily carry your sound system using the XP300 Slide and Lock feature. The Slide and Lock speaker enclosures allow you to connect both speakers together into a single, easy to carry unit. Follow these steps to configure the XP300 for transport.

1. Place one speaker on the floor and set it on its side.

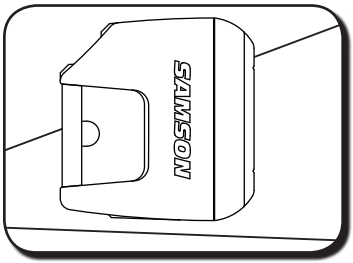

2. Position the second speaker above the first speaker and line up the “Slide and Lock” tracks and grooves so that they are parallel to the speaker on the floor. Speaker cabinets must be reversed with respect to top and bottom.
3. Slide the second speaker into the speaker on the floor making certain that the two speakers stay parallel to each other.

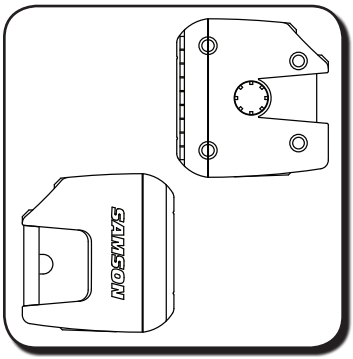

4. You will feel a slight click when the two speakers are in place.

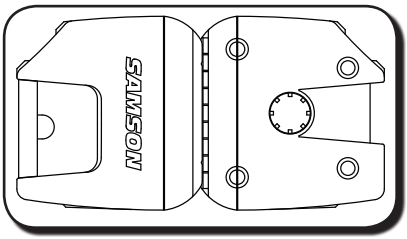

5. The XP300 can now be carried or transported as a single unit.

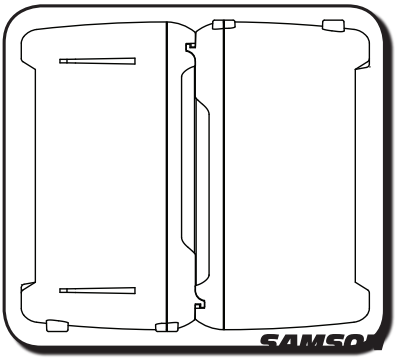

XP300 Mixer Layout

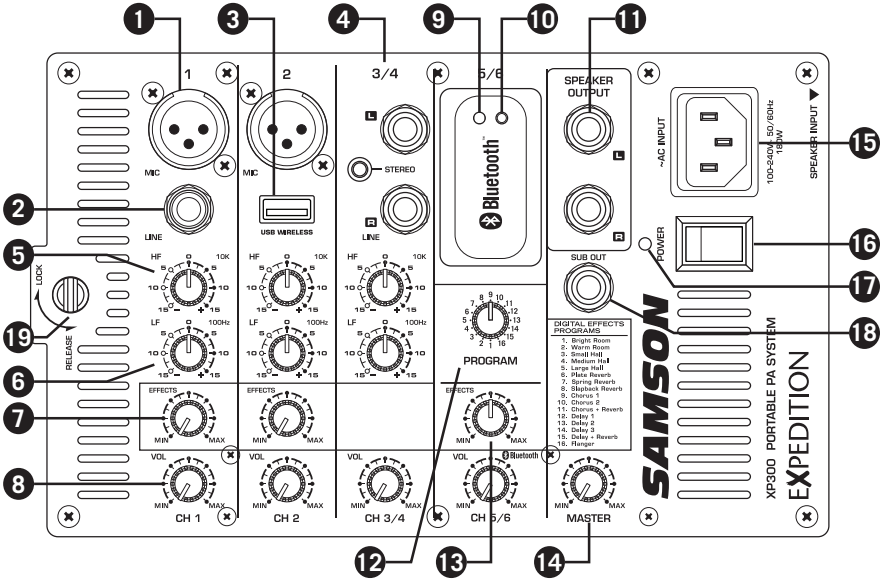

1. **XLR Mic Input Connectors (Channels 1-2) –** Use these XLR jacks to connect low impedance microphones, or low level signals from direct boxes, to the built-in mic preamps.

2. **1/4" Line Input Connector (Channel 1) –** Use this 1/4" jack to connect instrument or audio sources with line level signals.

3. **USB WIRELESS Input –** Connect the optional Samson XPD digital wireless USB receiver to this input. The wireless receiver gets its power from the XP300, so no additional power supply is needed. The input is routed to the CH 2 VOL control.
Note: The USB connector is for the Samson XPD receiver only. The connector is not designed to charge smartphones, tablets, or similar devices.

4. **Stereo Input Channel 3/4 –** Use the Left (L) and Right (R) 1/4" inputs or stereo 1/8" (3.5mm) input to connect stereo line level devices.

5. **High Frequency (HF) –** The HF knob controls the amount of treble applied to each channel. The channel's HIGH frequency response is flat when the knob is in the 12 o'clock or "0" position. Rotating the knob to the right will boost the channel's high frequency response above 10 kHz up to 15 dB, and rotating it towards the left will cut the high frequency response up to 15 dB.

6. **Low Frequency (LF) –** The LF knob controls the amount of bass applied to each channel. The channel's LOW frequency response is flat when the knob is in the 12 o'clock or "0" position. Rotating the knob to the right will boost the channel's low frequency response below 100 Hz up to 15 dB, and rotating it towards the left will cut the low frequency response up to 15 dB.

7. **EFFECTS Knobs –** Use the EFFECTS control knobs to add one of the sixteen digital effects to the Channel 1 or 2 input channels. As the knob is rotated clockwise, the level of signal sent to the effects bus is increased.

XP300 Mixer Layout

8. **VOL Control Knobs –** These knobs set the overall level for each input channel.
   NOTE: To reduce noise, set the VOLUME controls on any unused channels to the minimum setting.

9. **Pairing Indicator –** Displays the *Bluetooth* status of the XP300 system.

10. **Pairing Button –** Press this button to enable discoverable mode in order to pair with a *Bluetooth* audio device.

11. **SPEAKER OUT Jacks –** The XP300 has two 1/4" phone connectors, which are powered outputs used to connect your left and right speakers. Use the included speaker cables to connect the speakers.
    CAUTION: The total impedance load for each side of the amplifier must not be less than 8 ohms. Do not connect additional speakers to the XP300 mixer.

12. **Effects PROGRAM Selector –** This control knob is used to select one of 16, 24–bit DSP effects programs.

13. **EFFECTS Send Knob –** The EFFECTS Send knob is used to adjust the total amount of effects added to the master bus.

14. **MASTER Volume Knob –** The MASTER volume knob controls the overall output level. Signals from all six channels are routed here just before being routed to the built-in power amplifiers and Left and Right Speaker Output jacks.

15. **IEC Inlet –** Connect the supplied heavy-gauge 3-pin "IEC" power cable here.

16. **POWER Switch –** Use the POWER switch to turn power to the XP300 on or off.

17. **Power/Peak Indicator –** This LED will illuminate GREEN when the MAIN power switch is turned on, and light RED when the when the amp is near the clipping point. If the Peak indicator lights frequently, turn down the MASTER volume control or turn down the input channel VOL controls, until the indicator does not light anymore, or lights only occasionally with signal peaks.

18. **SUB OUT Connector –** This full-range output is used to send the main mix to an external active subwoofer. The signal present at this connector is the after the MASTER level control.

19. **Mixer Lock –** Turn this quarter turn lock counterclockwise, to the RELEASE position, to remove the mixer from the rear of the speaker cabinet. When transporting the XP300, make sure the lock is in the LOCK position.

Specifications

Amplifier		
RMS Power		300 W @ 8Ω (150 W per channel)
Frequency Response		40 Hz - 20 kHz
Power Consumption		AC Input 100V~240V 50/60Hz 180W
Operating Temperature		14° F (-10° C) to 104° F (40° C)
Speakers		
Low Frequency		6” bass transducer
High Frequency		1” tweeter
Mixer		
Inputs		XLR, 1/4”, 3.5mm stereo, USB Wireless
Outputs		1/4” Sub Out, 1/4” Speaker output
Phantom Power		+15V DC, Fixed Phantom Voltage
Input Channel EQ	High	10 kHz Shelving ±15 dB
	Low	100 Hz Shelving ±15 dB
Effects		16 Preset, 24-bit DSP
Indicators		Two Color LED - Power/Peak
Bluetooth®		Bluetooth 3.0, A2DP
Modulation Technique		FHSS (GFSK, π/4-DQPSK, 8-DPSK)
Dimensions and Weight		
Dimensions	Length	15.6”/395 mm
	Width	8.6”/218 mm
	Height	13.9”/354 mm
Weight		24 lbs/10.8 kgs

At Samson, we are continually improving our products, therefore specifications and images are subject to change without notice.

Samson Technologies Corp.
278-B Duffy Ave
Hicksville, New York 11801
Phone: 1-800-3-SAMSON (1-800-372-6766)
Fax: 631-784-2201
www.samsontech.com