EXPEDITION XP800

800-WATT PORTABLE PA SYSTEM

Owner's Manual

SAMSON®

Copyright 2015
v1
Samson Technologies Corp.
45 Gilpin Avenue
Hauppauge, New York 11788-8816
Phone: 1-800-3-SAMSON (1-800-372-6766)
Fax: 631-784-2201
www.samsontech.com

The *Bluetooth*® word mark and logos are registered trademarks owned by Bluetooth SIG, Inc. and any use of such marks by Samson Technologies is under license. Other trademarks and trade names are those of their respective owners."

Important Safety Information

ATTENTION
RISQUE DE CHOC ÉLECTRONIQUE -
NE PAS OUVRIR

This lightning flash with arrowhead symbol within an equilateral triangle is intended to alert the user to the presence of non-insulated “dangerous voltage” within the product’s enclosure that may be of sufficient magnitude to constitute a risk of electric shock.

The exclamation point within an equilateral triangle is intended to alert the user to the presence of important operating and maintenance instructions in the literature accompanying the appliance.

CAUTION
To prevent electric shock hazard, do not connect to mains power supply while grille is removed.

WARNING: TO REDUCE THE RISK OF ELECTRIC SHOCK, DO NOT REMOVE COVER (OR BACK) AS THERE ARE NO USER-SERVICEABLE PARTS INSIDE. REFER SERVICING TO QUALIFIED SERVICE PERSONNEL.

If you want to dispose this product, do not mix it with general household waste. There is a separate collection system for used electronic products in accordance with legislation that requires proper treatment, recovery and recycling.
Private household in the 28 member states of the EU, in Switzerland and Norway may return their used electronic products free of charge to designated collection facilities or to a retailer (if you purchase a similar new one).
For Countries not mentioned above, please contact your local authorities for a correct method of disposal.
By doing so you will ensure that your disposed product undergoes the necessary treatment, recovery and recycling and thus prevent potential negative effects on the environment and human health.

Important Safety Information

1. Read these instructions.
2. Keep these instructions.
3. Heed all warnings.
4. Follow all instructions.
5. Do not use this apparatus near water.
6. Clean only with dry cloth.
7. Do not block any ventilation openings. Install in accordance with the manufacturer's instructions.
8. Do not install near any heat sources such as radiators, heat registers, stoves, or other apparatus (including amplifiers) that produce heat.
9. Do not defeat the safety purpose of the polarized or grounding type plug. A polarized plug has two blades with one wider than the other. A grounding type plug has two blades and a third grounding prong. The wide blade or the third prong are provided for your safety. If the provided plug does not fit into your outlet, consult an electrician for replacement of the obsolete outlet.
10. Protect the power cord from being walked on or pinched particularly at the plugs, convenience receptacles, and at the point where they exit from the apparatus.
11. Only use attachments/accessories specified by the manufacturer.
12. Use only with the cart, stand, tripod, bracket, or table specified by the manufacturer, or sold with the apparatus. When a cart is used, use caution when moving the cart/apparatus combination to avoid injury from tip-over.

13. Unplug the apparatus during lightening, sort or when unused for long periods of time.
14. Refer all servicing to qualified personnel. Service is required when the apparatus has been damaged in any way, such as power supply cord or plug is damaged, liquid has been spilled or objects have fallen into the apparatus has been exposed to rain or moisture, does not operate normally, or has been dropped.
15. This appliance shall not be exposed to dripping or splashing water and that no object filled with liquid such as vases shall be placed on the apparatus.
16. Caution-to prevent electrical shock, match wide blade plug wide slot fully insert.
17. Please keep a good ventilation environment around the entire unit.
18. POWER ON/OFF SWITCH: For products with a power switch, the power switch DOES NOT break the connection from the mains.
19. MAINS DISCONNECT: The plug should remain readily operable. For rack-mount or installation where plug is not accessible, an all-pole mains switch with a contact separation of at least 3mm in each pole shall be incorporated into the electrical installation of the rack or building.

Important Safety Information

FCC Notice

1. This device complies with Part 15 of the FCC Rules. Operation is subject to the following two conditions:
   (1) This device may not cause harmful interference.
   (2) This device must accept any interference received, including interference that may cause undesired operation.
2. Changes or modifications not expressly approved by the party responsible for compliance could void the user's authority to operate the equipment.

FCC Statement

This equipment has been tested and found to comply with the limits for a Class B digital device, pursuant to Part 15 of the FCC Rules. These limits are designed to provide reasonable protection against harmful interference in a residential installation.

This equipment generates uses and can radiate radio frequency energy and, if not installed and used in accordance with the instructions, may cause harmful interference to radio communications. However, there is no guarantee that interference will not occur in a particular installation. If this equipment does cause harmful interference to radio or television reception, which can be determined by turning the equipment off and on, the user is encouraged to try to correct the interference by one or more of the following measures:

- Reorient or relocate the receiving antenna.
- Increase the separation between the equipment and receiver.
- Connect the equipment into an outlet on a circuit different from that to which the receiver is connected.
- Consult the dealer or an experienced radio/TV technician for help.

RF Warning Statement

The device has been evaluated to meet general RF exposure requirement. The device can be used in portable exposure condition without restriction.

This device complies with RSS-310 of Industry Canada. Operation is subject to the condition that this device does not cause harmful interference.

FCC Radiation Exposure Statement

This equipment complies with FCC RF radiation exposure limits set forth for an uncontrolled environment. This equipment should be installed and operated with a minimum distance of 20 centimeters between the radiator and your body.

CE0700

Introduction

Thank you for purchasing the Expedition XP800 PORTABLE PA SYSTEM from Samson! The XP800 delivers the optimum balance between huge, awesome sound and portability. The system is light enough for one person to carry, and packs together into a single unit, making it amazingly easy to transport even in the trunk of a compact car.

The XP800 system is comprised of two 8" 2-way speaker cabinets, an 8-channel, 800 watt powered mixer, and two speakers cables. The powered mixer packs neatly into the back of one of the speaker cabinets and there is an accessory compartment behind the second cabinet to hold the speaker and power cables. The two speakers feature our unique slide and lock design to join together, allowing the entire system to pack up into a single unit about the size of a carry-on piece of luggage.

The 8-channel mixer can be used while it is stored in the back of the speaker or removed from the speaker for desktop use. It features 4 inputs for connecting microphones, plus two inputs for connecting stereo signals, like those from a keyboard or MP3 player. There's also a built-in, 24-bit digital effects processor to add studio quality effects to your voice or instruments. For music playback, the XP800 features wireless *Bluetooth*® connectivity, to stream audio from your smart phone, tablet, or computer. The mixer also provides a robust output, with 800 watts of total power from the highly-efficient, lightweight, Class D amplifier section.

The XP800 employs a matched speaker system with dual 2-way enclosures that have proprietary 8" woofers and 1" high frequency drivers loaded in a 90° x 60° horn for wide vertical coverage. To project the sound to a larger audience, the XP800 speakers can be mounted on standard speaker stands, thanks to the integral pole mount receptacles. The XP800 is constructed using durable ABS, high impact plastic, making it super road tough, and at the same time, lightweight.

The XP800 is the perfect solution for your solo performance, garage band rehearsal, cocktail hour act, boardroom presentation, or classroom lecture. In this manual, you'll find a detailed description of the features of the XP800 PA system, as well as step-by-step instructions for its setup and use, and full specifications.

We recommend you keep the following records for reference, as well as a copy of your sales receipt.

Serial number: _____

Date of purchase: _____

Dealer name: _____

With proper care and maintenance, your XP800 will operate trouble-free for many years. Should your XP800 ever require servicing, a Return Authorization (RA) number must be obtained before shipping your unit to Samson. Without this number, the unit will not be accepted. Please call Samson at 1-800-3SAMSON (1-800-372-6766) for an RA number prior to shipping your unit. Please retain the original packing materials and, if possible, return the unit in its original carton. If your XP800 was purchased outside of the United States, contact your local distributor for warranty details and service information.

Features

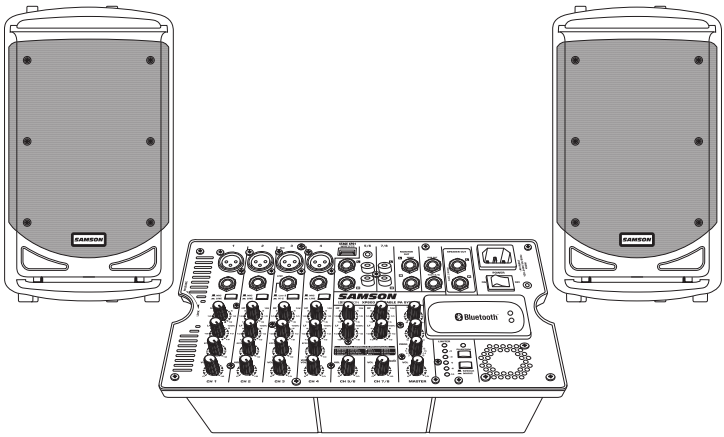

The Samson Expedition XP800 is a compact portable PA system with dual 2-way speakers, onboard mixer and 800 watt power amplifier. Here are some of the main features:

- Lightweight and designed to allow you to connect all the pieces together into a single, easy to move case.
- The mixer is stored in one of the speaker cabinets; the other cabinet has an accessory compartment for storing the speaker cables, microphones, etc.
- The speakers are tuned, 2-way vented enclosures with 8" woofers for deep bass, complimented by a 1-inch high frequency driver, set in a custom horn with a 60 x 90 degree coverage pattern producing a clean, clear sound.
- Internal 2 x 400 watt lightweight power amplifier produces a powerful stereo sound.
- The XP800's mixer can be removed from the speaker for tabletop placement and you can use the kick stand to set the mixer at an ergonomically correct angle. You can also use the optional SMS308 adapter to mount the mixer to a microphone stand.
- The 8-channel mixer features four Mic/Line inputs allowing you to connect microphones or line level signals, plus three stereo inputs for connecting line signals from keyboards, drum machines and MP3 players.
- Each channel features bass and treble controls allowing you to tailor the sound of each input.
- To create a lush sound on the first four channels, you can select from the sixteen on-board, 24-bit digital effects.
- Bluetooth® connectivity allows you to stream wireless audio from your smartphone, tablet, or computer.
- For added flexibility, the XP800's mixer has Subwoofer and Monitor ouptus, allowing you to connect external powered speakers or active subwoofer to expand the system.

Mixer Layout

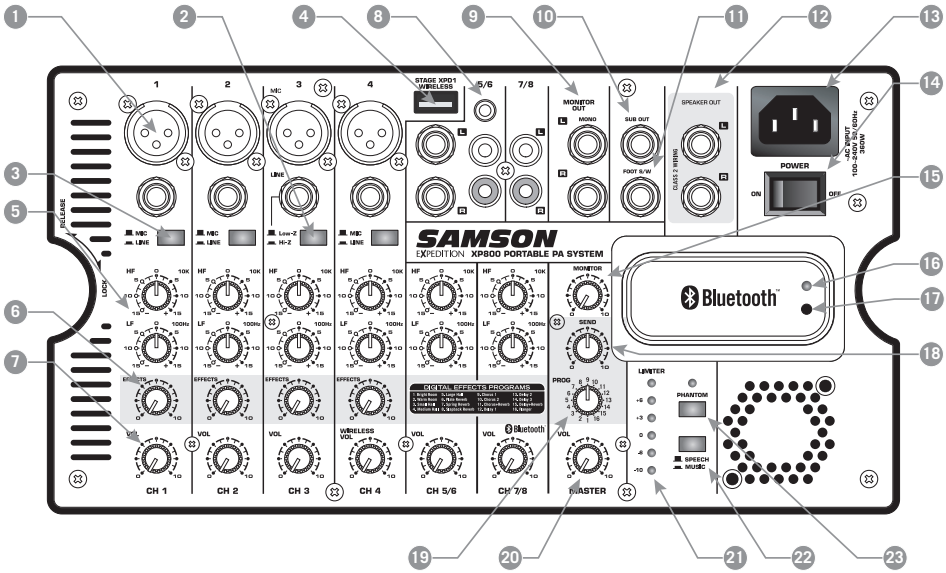

1. **Channel Input Jacks (channels 1 – 4)**
   MIC XLR Connector – Use these XLR jacks to connect low impedance microphones to the XP800's built-in mic preamps.
   LINE ¼" Phone Connector – Use these ¼" jacks to connect instrument or audio sources with line–level signals to the XP800. You can connect the outputs from acoustic guitar with active pickups, keyboards, drum machines, CD/MP3/TAPE players and other units with line level outputs here.

2. **Low-Z/Hi-Z Switch –** This switches changes the input impedance of the channel 3 ¼" jack from low impedance (Low-Z), for line level devices, to high impedance (Hi-Z) for electric instruments with pickups.

3. **MIC/LINE Switch (channels 1, 2, & 4) –** The MIC position changes the gain of both input jacks to MIC level. The LINE position reduces the gain of both jacks by 26dB to line level.

4. **STAGE XPD1 WIRELESS Input –** Connect the optional Samson Stage XPD1 digital wireless USB receiver to this input. The wireless receiver gets its power from the XP800, so no additional power supply is needed. The WIRELESS input is routed to the channel 4 LEVEL control. *Note: This USB jack does not provide power for smart phones.*

5. **Equalizer Knobs**
   HIGH Frequency – The HIGH knob controls the amount of treble applied to each channel. The channel's high frequency response is flat when the knob is in the center detent (12:00) position. Rotating the knob to the right will boost the channel's high frequency response above 10 kHz by 15 dB, and rotating it towards the left will cut the high frequency response by 15 dB.

LOW Frequency – The LOW knob controls the amount of bass applied to each channel. The channel's low frequency response is flat when the knob is in the center detent (12:00) position. Rotating the knob to the right will boost the channel's low frequency response below 100 Hz by 15 dB, and rotating it towards the left will cut the low frequency response by 15 dB.

6. **EFFECTS Knobs –** Use the EFFECTS control knows to add an effect to a Mic or Line input on any of the first four input channels. As the knob is rotated clockwise, the level of signal sent to the effects bus is increased.

7. **LEVEL Knobs –** This knob sets the overall level for the input channel.
NOTE: To reduce noise, set the LEVEL controls on any unused channels to the minimum setting.

8. **Stereo Channel Input Jacks (channels 5/6, 7/8) –** For stereo inputs, use the L input to connect the left channel and the R input to connect the right channel. Use these inputs to connect high impedance microphones, synthesizers, drum machines, MP3, CD, tape players or any other line level device. The XP800 features ¼" phone, ⅛" phone, and RCA connectors.

9. **MONITOR OUT Jacks –** The signal present at the MONITOR OUT jacks is sent from the MONITOR level control knob, which is fed from the input channels. The MASTER control does not affect the MONITOR OUT signal. This output can be used to send the mix to powered speaker cabinets to use a stage monitors, or as additional front of house speakers to expand the coverage of the system.

10. **SUB OUT Connector –** This full-range output is used to send the main mix to an external active subwoofer. The signal present at this connector is the before the MASTER level control.

11. **FOOT SW Jack –** Connect a footswitch to this jack to turn on and off the on–board digital effects.

12. **SPEAKER OUT Jacks –** Two ¼" phone powered output jacks used to connect the left and right speakers. Use the included speaker cables to connect the speakers.
CAUTION: The total impedance load for each side of the amplifier must not be less than 8 Ohms. Do not connect additional speakers to the XP800 mixer/amplifier.

13. **AC Input –** Connect the supplied heavy gauge 3-pin "IEC" power cable here.

14. **POWER Switch –** Use the POWER switch to turn power to the XP800 on or off. The switch illuminates red when the unit is in the ON position and receiving power.

15. **MONITOR Level Knob –** The MONITOR level control is used to control the overall level sent to the MONITOR OUT.

16. **Pairing Indicator –** Displays the *Bluetooth* status of the XP800 system.

17. **Pairing Button –** Press this button to enable discoverable mode in order to pair with a *Bluetooth* audio device.

Mixer Layout

18. **Effects SEND Knob –** The SEND knob is used to adjust the total amount of effects added to the master bus.

19. **Effects Program (PROG) Selector –** This control knob is used to select one of 16, 24–bit DSP effects programs.

20. **MASTER Knob –** The MASTER volume knob controls the overall output level. This knob determines the final output signal level. Signals from all channels are routed here just before being routed to the built–in power amplifiers and Left and Right speaker output jacks.

21. **Metering LED Indicators –** This six–segment bar meter shows the XP800's output level. For optimum signal–to–noise ratio, set the VOLUME control so that program material is usually at or around +3 to +6 VU, with occasional, but not steady lighting of the red "LIMITER" segment.

22. **SPEECH/MUSIC Switch –** The SPEECH/MUSIC switch is used to change the overall frequency response, or tone contour, for the XP800 sound system. If your application is mainly for music, press the switch down to select the MUSIC response curve. If your application is mainly for spoken word, leave the switch up to select the SPEECH response curve.

23. **PHANTOM Switch –** The XP800 features an onboard phantom power supply to operate condenser microphones. When the switch is engaged, the LED will illuminate indicating that phantom power is now available on the microphone pre–amps. **IMPORTANT NOTE:** To avoid a loud pop, be sure to turn down the MASTER level control before plugging and unplugging the mic cables when the phantom power is active.

Pairing with a Bluetooth® device

Bluetooth® **is a wireless communication technology that allows for connectivity between a wide range of devices. The XP800 uses *Bluetooth* to stream high quality audio from your *Bluetooth* enabled device without the need for connecting any cables. In order for your device to work with the XP800 it must first be paired.**

1. Turn all channel LEVEL controls down counterclockwise to **0**.
2. With the XP800 and your *Bluetooth* device powered on; press the PAIR button on the top panel of the XP800 mixer to make the speaker discoverable. The *Bluetooth* indicator will slowly flash blue.
3. In the settings of your *Bluetooth* device, set it to “discover” available devices.
4. From the *Bluetooth* device list, select the "Samson XP800" device.
5. If your device asks for a passkey, enter digits 0000 (four zeros) and press OK. Some devices may also ask you to accept the connection.
6. As the XP800 is connecting to your device, the *Bluetooth* indicator will quickly flash blue.
7. The XP800 speaker indicates that pairing is complete when the indicator turns steady blue. You can now stream audio from your device to the XP800 speakers.
8. With the volume control on your *Bluetooth* device turned up, play some music, and slowly raise the XP800 BLUETOOTH channel 7/8 LEVEL control until you have reached the desired level.

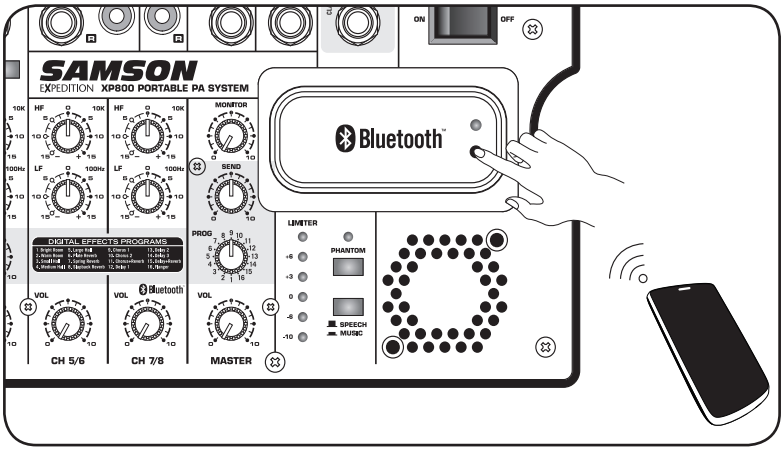

Setting Up the XP800

Unpack all the system components from the shipping carton and save all packing materials in the event your unit ever needs to be returned for service.

Remove the mixer by turning the quarter turn screw counterclockwise towards the RELEASE position.

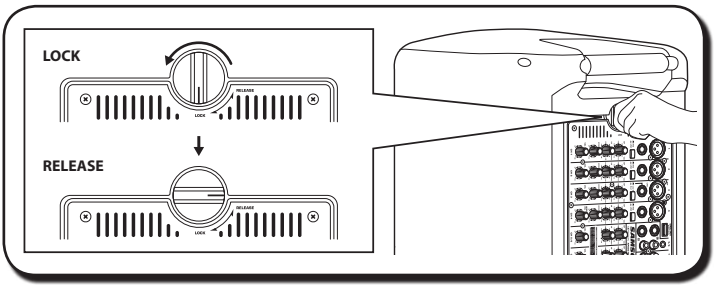

Carefully hold the mixer to remove it from the speaker.

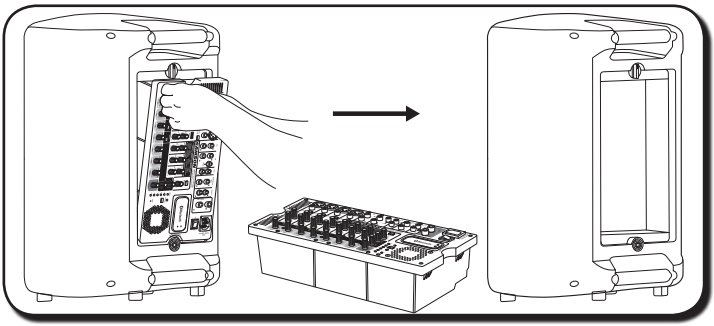

Remove the accessory compartment cover by turning the quarter turn screw counterclockwise towards the RELEASE position, and remove the included speaker cables.

Replace the accessory panel by aligning the bottom of the panel with the slots. Make sure the quarter turn screw is in the RELEASE position; then close the panel and turn the quarter turn screw clockwise to LOCK.

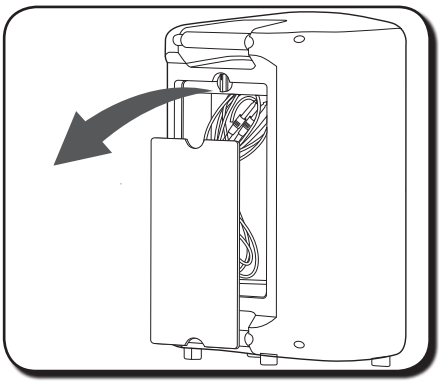

Setting Up the XP800

Position the speakers on the floor or on stands.

For maximum sound coverage the XP800 can be used with a standard 1⅜" speaker stand. The speaker should be raised above the heads of the listening audience. Take care when placing the speaker on a stand, to ensure that it is on a level, steady surface and will not tip over. When using the speaker on the floor, or when the speaker is below the listener, the XP800 features a monitor angle position to project the sound up, towards the audience.

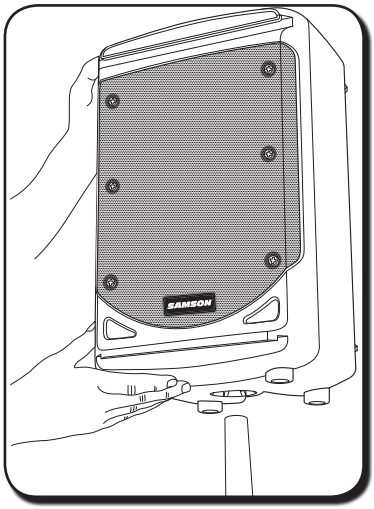

Using one of the included speaker cables, connect the mixer's LEFT SPEAKER OUT to the left speaker's input connector. Next, use the second included speaker cable to connect the RIGHT SPEAKER OUT to the right speaker's input connector.

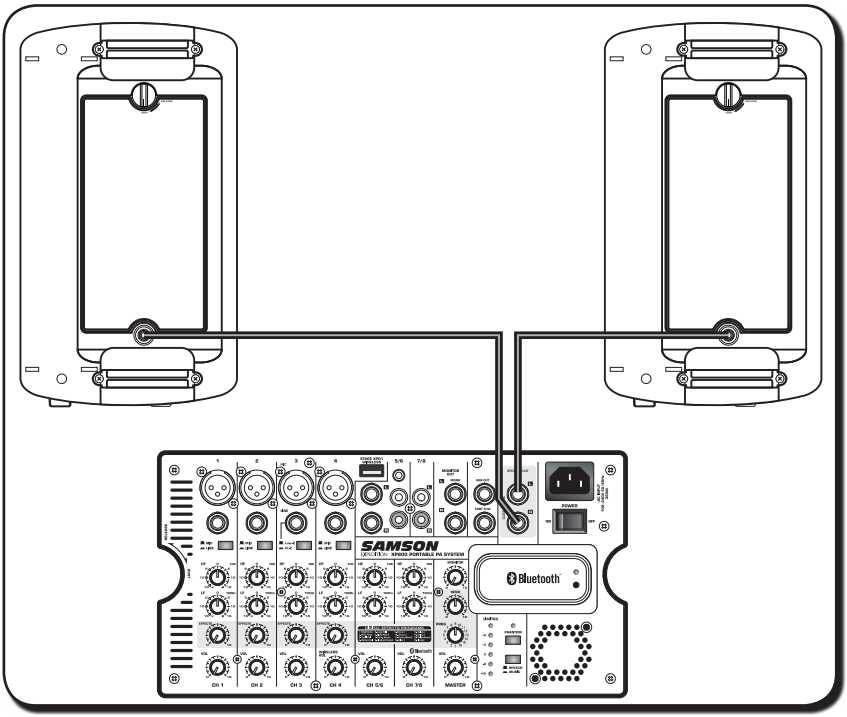

Quick Start

1. Be sure that the XP800's POWER switch is set to the OFF position.
2. If the speakers are not connected, connect the speaker wires as described in the previous section.
3. Turn each of the channel LEVEL and MASTER volume controls fully counterclockwise, to the "0" position.
4. Next, connect one side of the included power cable to the XP800 mixer's power inlet and the other to a grounded AC power outlet.
5. Connect your microphones using standard XLR cables, instruments using ¼" phone cables, and MP3 player using ⅛" cable, into the appropriate jacks on the mixer.

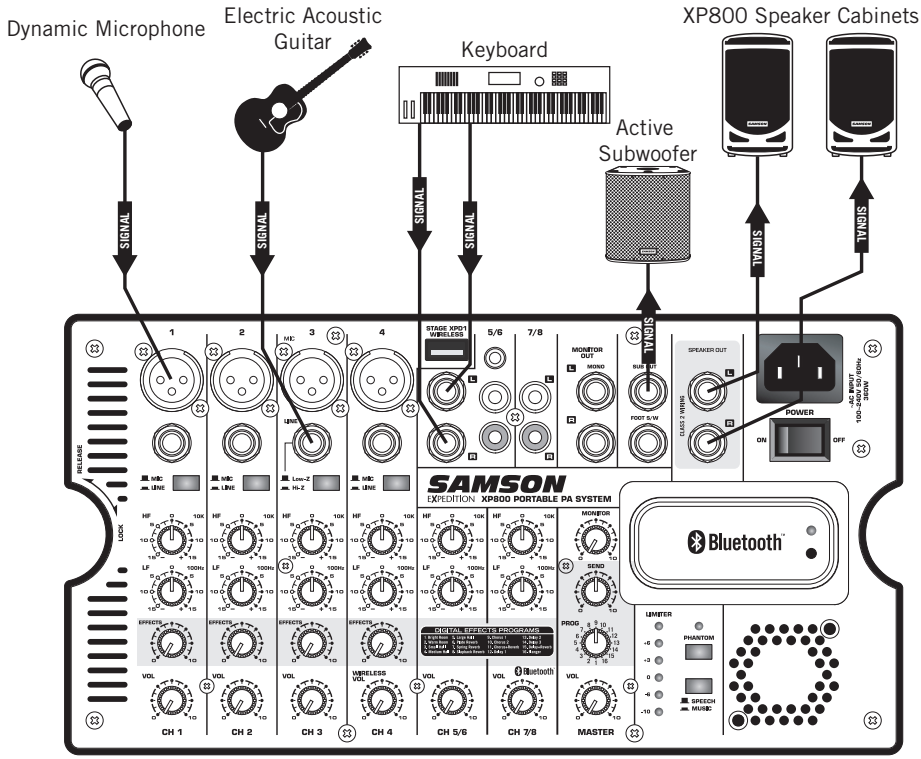

6. Switch on all equipment connected to the XP800, then switch the XP800's POWER switch to the ON position.
7. Turn the MASTER level control about 3/4 of the way up.
8. Start talking or playing into channel 1 while slowly adjusting the LEVEL control until you have reached the desired level. Do the same for each channel you are using.

9. If you notice that the LIMITER indicator is lighting constantly, turn the MASTER volume down so that the indicator only lights occasionally during loud hits.
10. To add depth to the mix or smooth out the vocals, you can apply effects such as reverb to channels 1–4. To do this, raise the EFFECTS level controls on the channel(s) to which you would like to add the effect.
11. Slowly turn up the effects SEND knob until the desired sound is reached.
12. To alter the tonal characteristic of the signal, you can adjust the LOW (bass) and HIGH (treble) controls. If you find the audio too muddy, you may want to reduce the LOW control. If you find that the audio sounds dull, you can increase the HIGH control. There is no right or wrong way to EQ a sound. You should listen to how the mix sounds in the room and fine-tune to your liking.

Applying Effects

The XP800 features built-in, high quality, 24-bit digital effects that you can add to channels 1 through 4. You can use effects like delay or reverb to enhance vocals or ambiance to the mix by following the steps below:

1. Connect a mic or instrument to the desired channel, and adjust the volume and equalizer to your liking.
2. Use the PROG selector to choose one of the ten built-in digital effects.
3. Raise the EFFECTS level on the channel to which you want to add the digital effect.
4. Raise the effects SEND main level control to apply the amount of effect desired.

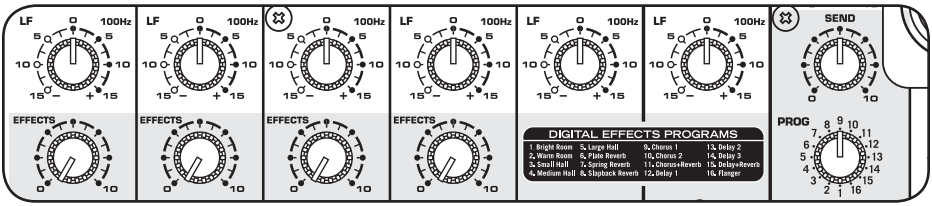

Avoiding Feedback

Feedback is the annoying howling and squealing that can heard when the microphone picks up sound from the speaker. The sound is then re-amplified back through the speaker again, creating a feedback loop. Follow these steps to minimize the likelihood of feedback:

- Avoid pointing the microphone directly at the speakers. In general it is recommended that the microphone be positioned behind the speaker enclosure. This uses the directional characteristics of the speaker and microphone to your advantage.
- Keep the microphone as far from the speakers as possible. This will help achieve isolation between the speaker and the microphone, and allow you to increase the output of the XP800.
- Position the microphone as close to the sound source as possible. This will enable the microphone to pick up more direct sound, and allow you to reduce the microphone input gain control.
- Reduce the MASTER LEVEL of the XP800 system.

Stage XPD1 Wireless System (Optional)

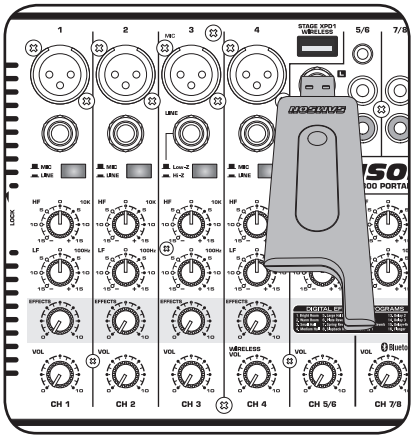

Plug the RXD1 USB receiver into the Channel 4 USB jack labeled WIRELESS.

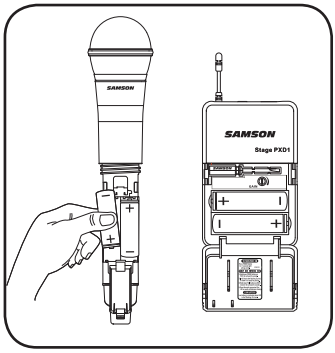

On the wireless transmitter, place a fresh set of AA (LR6) batteries in the transmitter battery holder, taking care to observe the polarity markings.

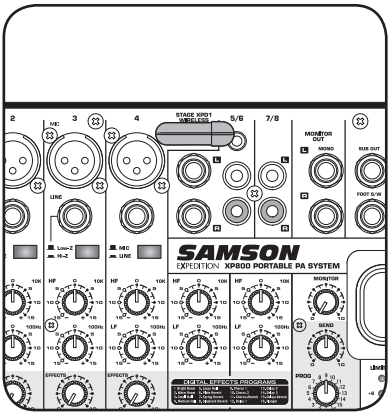

Turn the channel 4 LEVEL knob on the XP800 completely counterclockwise to 0, then turn the POWER siwtch on the XP800 to the ON position.

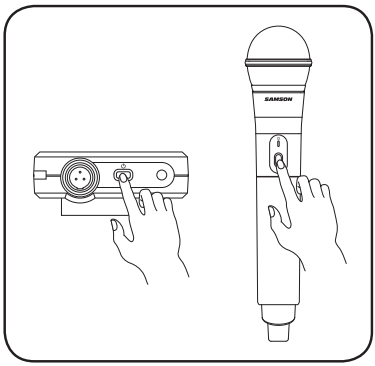

Turn on the power to the transmitter by pressing and holding Power switch; the indicator LED will light amber.

Stage XPD1 Wireless System (Optional)

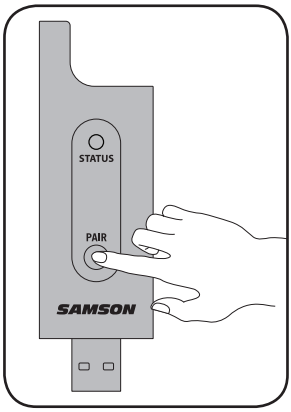

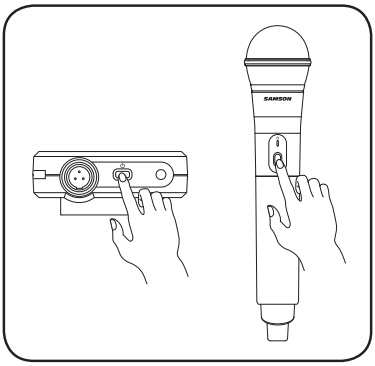

If the handheld transmitter and receiver have not been previously paired, press and hold the button on the RXD1 receiver for >5 seconds, until it begins to flash.

Press and hold the Power button on the transmitter >5 seconds. This will put both components into pairing modes. Once the receiver and transmitter communicate and sync, the LEDs on both units will light steady and will be ready for operation.

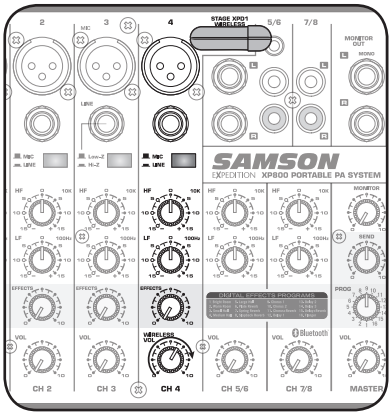

Raise the MASTER LEVEL control and speak or sing into the mic at a normal performance level while raising the Channel 4 LEVEL control until the desired level is reached.

If you hear distortion check the LIMITER LED. If it is lit red, turn down the channel 4 LEVEL on the XP800 until it lights only occasionally during loud sounds. If you still hear distortion, unscrew the microphone body and use the supplied plastic screwdriver to turn the Gain control in the HXD1 transmitter slowly counterclockwise until the distortion disappears.

Conversely, if you hear a weak, noisy signal at the desired volume level (and with the WIRELESS control of the XP800 turned fully clockwise), use the supplied plastic screwdriver to turn the Gain control in the transmitter slowly clockwise until the signal reaches an acceptable level.

Specifications

Amplifier		
Power (0.5% THD at 1KHz)		800 W @ 8Ω (400 W per channel) Peak
		400 W @ 8Ω (200 W per channel) Average
Frequency Response		20 Hz - 20 kHz
Power Consumption		120Vac 3.29A @ rated output power
Speakers		
Low Frequency		8” bass transducer
High Frequency		1” tweeter
Mixer		
Inputs		XLR, ¼” balanced, RCA, 3.5 mm stereo, USB Wireless
Outputs		¼” MONITOR, ¼” SUB OUT , ¼” Speaker output
Maximum Output Level (0.5% T.H.D at 1KHz)		+22dBu(MONITOR L/R & SUB OUT) @10KΩ
Phantom Power		+15V DC, Fixed Phantom Voltage
Input Channel EQ	High	10kHz Shelving ±15 dB
	Low	100Hz Shelving ±15 dB
Speech/Music Switch		167Hz, 3dB/Octave
Effects		16 Preset, 24-bit DSP
Indicators		5-point Level, LIMITER, PHANTOM
Bluetooth®		Bluetooth 3.0, A2DP
Dimensions and Weight		
Dimensions		20.1”(L) x 10.6”(W) x 19”(H) 510mm(L) x 270mm(W) x 485mm(H)
Weight		41.5lb / 18.8kg

At Samson, we are continually improving our products, therefore specifications and images are subject to change without notice.

Samson Technologies Corp.
45 Gilpin Avenue
Hauppauge, New York 11788-8816
Phone: 1-800-3-SAMSON (1-800-372-6766)
Fax: 631-784-2201
www.samsontech.com