A Test Lab Techno Corp.

Changan Lab：No. 140 -1, Changan Street, Bade City, Taoyuan County, Taiwan R.O.C.
Tel：886-3-271-0188 / Fax：886-3-271-0190

SAR EVALUATION REPORT

Test Report No.	:	1508FS14-02
Applicant	:	Fisher-Price Inc.
Product Type	:	DNV31 Smart Toy Bear
Trade Name	:	Smart Toy Bear
Model Number	:	DNV31
Date of Received	:	Jul. 20, 2015
Test Period	:	Aug. 14 ~ Aug. 18, 2015
Date of Issued	:	Sep. 25, 2015
Test Environment	:	Ambient Temperature： 22 ±2 ° C
		Relative Humidity：40 - 70 %
Standard	:	ANSI/IEEE C95.1-1999
		IEEE Std. 1528-2013
		47 CFR Part §2.1093;
		KDB 865664 D01 v01r04 / KDB 865664 D02 v01r01
		KDB447498 D01 v05r02 / KDB 248227 D01 v02r01
Test Lab Location	:	Chang-an Lab

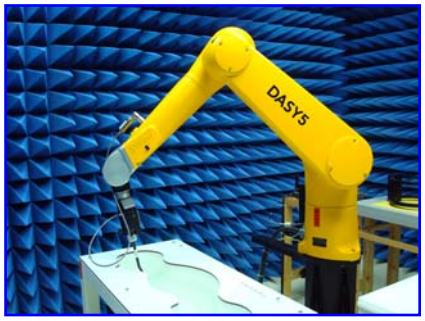

1. The test operations have to be performed with cautious behavior, the test results are as attached.
2. The test results are under chamber environment of A Test Lab Techno Corp. A Test Lab Techno Corp. does not assume responsibility for any conclusions and generalizations drawn from the test results with regard to other specimens or samples.
3. The measurement report has to be written approval of A Test Lab Techno Corp. It may only be reproduced or published in full. This report shall not be reproduced except in full, without the written approval of A Test Lab Techno Corp. The test results in the report only apply to the tested sample.

Approved By : Bill Hu (Bill Hu)

Tested By : Sky Chou (Sky Chou)

©2015 A Test Lab Techno Corp.

Contents

1. Summary of Maximum Reported SAR Value 4
2. Description of Equipment under Test (EUT) 5
3. Introduction 6
   3.1 SAR Definition 6
4. SAR Measurement Setup 7
   4.1 DASY E-Field Probe System 8
   4.1.1 E-Field Probe Specification 8
   4.1.2 E-Field Probe Calibration process 9
   4.2 Data Acquisition Electronic (DAE) System 10
   4.3 Robot 10
   4.4 Measurement Server 10
   4.5 Device Holder 11
   4.6 Oval Flat Phantom - ELI 5.0 11
   4.7 Data Storage and Evaluation 12
   4.7.1 Data Storage 12
   4.7.2 Data Evaluation 13
5. Tissue Simulating Liquids 15
   5.1 Ingredients 16
   5.2 Recipes 16
   5.3 Liquid Depth 17
6. SAR Testing with RF Transmitters 18
   6.1 SAR Testing with 802.11 Transmitters 18
   6.2 Conducted Power 19
   6.3 Antenna location 20
   6.4 Stand-alone SAR Evaluate 22
   6.5 Simultaneous Transmitting Evaluate 25
   6.5.1 Estimated SAR 25
   6.5.2 Sum of 1-g SAR of all simultaneously transmitting 26
   6.5.3 SAR to peak location separation ratio (SPLSR) 27
   6.6 SAR test reduction according to KDB 27
7. System Verification and Validation 28
   7.1 Symmetric Dipoles for System Verification 28
   7.2 Liquid Parameters 29
   7.3 Verification Summary 30
   7.4 Validation Summary 31
8. Test Equipment List 32
9. Measurement Uncertainty 33
10. Measurement Procedure 36
   10.1 Spatial Peak SAR Evaluation 36
   10.2 Area & Zoom Scan Procedures 37
   10.3 Volume Scan Procedures 37
   10.4 SAR Averaged Methods 37
   10.5 Power Drift Monitoring 37

©2015 A Test Lab Techno Corp.

11. SAR Test Results Summary 38
11.1 Head Measurement SAR 38
11.2 Body Measurement SAR 38
11.3 SAR Measurement Variability 39
11.4 Std. C95.1-1999 RF Exposure Limit 40
12. Conclusion 41
13. References 41
Appendix A - System Performance Check 42
Appendix B - SAR Measurement Data 44
Appendix C - Calibration 55

©2015 A Test Lab Techno Corp.

1. Summary of Maximum Reported SAR Value

Equipment Class	Mode	Highest Reported
		Body standalone SAR1g (0 cm) (W/kg)
DTS	2.4G WLAN Antenna	1.19
DSS	Bluetooth Antenna	N/A
Highest Simultaneous Transmission SAR		Body standalone (W/kg)
DTS + DSS at test position Side2		1.232

Note: The SAR limit (Head & Body: SAR1g 1.6 W/kg) for general population / uncontrolled exposure is specified in FCC 47 CFR part 2 (2.1093) and ANSI/IEEE C95.1-1999.

©2015 A Test Lab Techno Corp.

2. Description of Equipment under Test (EUT)

Applicant	Fisher-Price Inc.		
Applicant Address	636 Girard Avenue,East Aurora, New York, United States		
Manufacture	QM (Hong Kong) Limited		
Manufacture Address	19C, TML Tower, 3 Hoi Sing Road, Tsuen Wan, HK		
Product Type	DNV31 Smart Toy Bear		
Series Product Type (1)	DNV30 Smart Toy Panda		
Series Product Type (2)	DNV32 Smart Toy Monkey		
Trade Name	Smart Toy Bear		
Series Trade Name (1)	Smart Toy Panda		
Series Trade Name (2)	Smart Toy Monkey		
Model Number	DNV31		
Series Model Number(1)	DNV30		
Series Model Number(2)	DNV32		
Different Description	The only difference between these models are cosmetic details, trade name, model number for marking purpose. Construction design, physical design, enclosure are identical between these models.		
FCC ID	CCT-DNV31-15		
RF Function	IEEE 802.11b / 802.11g / 802.11n (2.4GHz) 20MHz IEEE 802.11n (2.4GHz) 40MHz Bluetooth LE		
Tx Frequency	Band	Operate Frequency (MHz)	
	IEEE 802.11b / 802.11g / 802.11n (2.4GHz) 20MHz	2412 - 2462	
	IEEE 802.11n (2.4GHz) 40MHz	2422 - 2452	
	Bluetooth LE	2402 - 2480	
RF Conducted Power (Avg.)	Band	Power	
		W	dBm
	IEEE 802.11b	0.0596	17.75
	IEEE 802.11g	0.0175	12.43
	IEEE 802.11n (2.4GHz) 20MHz	0.0139	11.42
	IEEE 802.11n (2.4GHz) 40MHz	0.0118	10.71
	Bluetooth LE	0.0004	-3.49
Device Category	Portable Device		
Antenna Type	IFA Antenna		
RF Exposure Environment	General Population / Uncontrolled		
Battery Option	Standard		
	Trade Name: 深圳市動力聚能科技有限公司 Model: 683086C-2000-3.7 Spec: DC 3.7V / 2000mAh		
Application Type	Certification		

Note:The above EUT's information was declared by manufacturer. Please refer to the specifications or user's manual for more detailed description.

3. Introduction

The A Test Lab Techno Corp. has performed measurements of the maximum potential exposure to the user of **Fisher-Price Inc. Trade Name：Smart Toy Bear Model(s)：DNV31**. The test procedures, as described in American National Standards, Institute C95.1-1999〔1〕were employed and they specify the maximum exposure limit of 1.6mW/g as averaged over any 1 gram of tissue for portable devices being used within 20cm between user and EUT in the uncontrolled environment. A description of the product and operating configuration, detailed summary of the test results, methodology and procedures used in the equipment used are included within this test report.

3.1 SAR Definition

Specific Absorption Rate (SAR) is defined as the time derivative (rate) of the incremental energy (dw) absorbed by (dissipated in) an incremental mass (dm) contained in a volume element (dv) of a given density (ρ). It is also defined as the rate of RF energy absorption per unit mass at a point in an absorbing body (see Figure 2).

$$\text{SAR} = \frac{d}{dt}\left(\frac{dw}{dm}\right) = \frac{d}{dt}\left(\frac{dw}{\rho dv}\right)$$

Figure 2. **SAR Mathematical Equation**

SAR is expressed in units of Watts per kilogram (W/kg)

$$\text{SAR} = \frac{\sigma E^2}{\rho}$$

Where：

σ = conductivity of the tissue (S/m)

ρ = mass density of the tissue (kg/m3)

E = RMS electric field strength (V/m)

＊Note：

The primary factors that control rate of energy absorption were found to be the wavelength of the incident field in relations to the dimensions and geometry of the irradiated organism, the orientation of the organism in relation to the polarity of field vectors, the presence of reflecting surfaces, and whether conductive contact is made by the organism with a ground plane〔2〕

©2015 A Test Lab Techno Corp.

4. SAR Measurement Setup

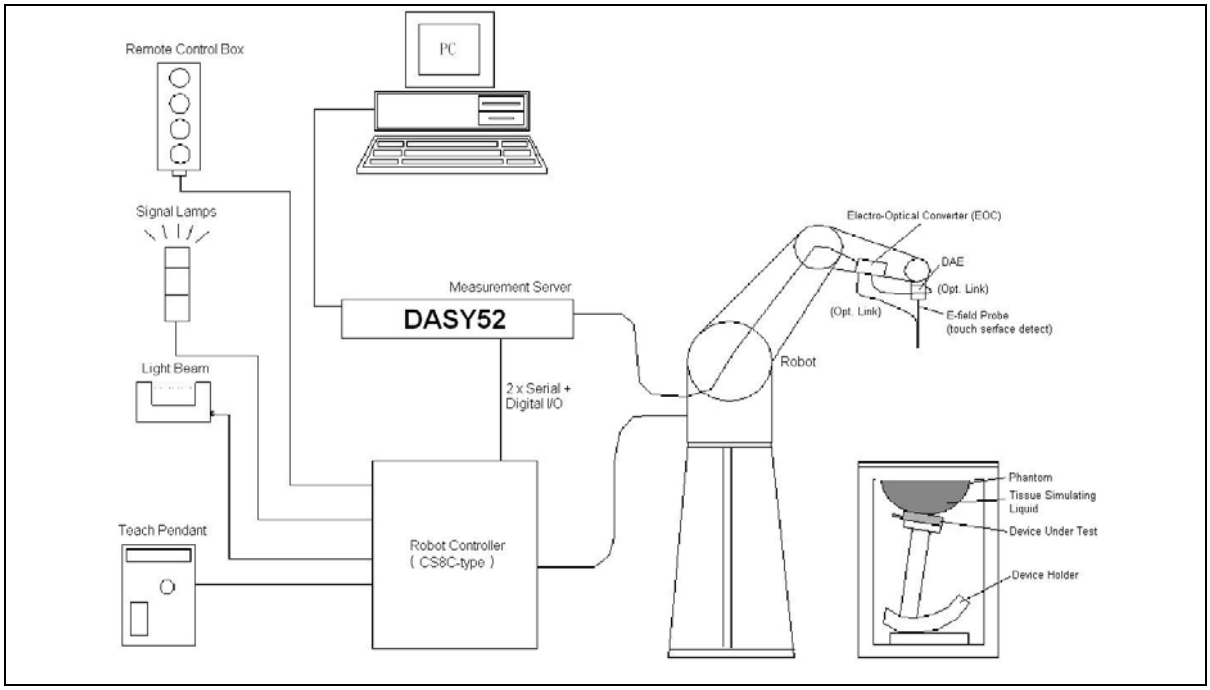

The DASY52 system for performing compliance tests consists of the following items:

1. A standard high precision 6-axis robot (Stäubli TX family) with controller, teach pendant and software. An arm extension for accommodating the data acquisition electronics (DAE).
2. A dosimetric probe, i.e., an isotropic E-field probe optimized and calibrated for usage in tissue simulating liquid. The probe is equipped with an optical surface detector system.
3. A data acquisition electronics (DAE) which performs the signal amplification, signal multiplexing, AD-conversion, offset measurements, mechanical surface detection, collision detection, etc. The unit is battery powered with standard or rechargeable batteries. The signal is optically transmitted to the EOC.
4. The function of the measurement server is to perform the time critical tasks such as signal filtering, control of the robot operation and fast movement interrupts.
5. A probe alignment unit which improves the (absolute) accuracy of the probe positioning.
6. A computer operating Windows 2000 or Windows XP.
7. DASY52 software.
8. Remote controls with teach pendant and additional circuitry for robot safety such as warning lamps, etc.
9. The SAM twin phantom enabling testing left-hand and right-hand usage.
10. The device holder for handheld mobile phones.
11. Tissue simulating liquid mixed according to the given recipes.
12. Validation dipole kits allowing validating the proper functioning of the system.

©2015 A Test Lab Techno Corp.

4.1 DASY E-Field Probe System

The SAR measurements were conducted with the dosimetric probe (manufactured by SPEAG), designed in the classical triangular configuration〔3〕and optimized for dosimetric evaluation. The probes is constructed using the thick film technique; with printed resistive lines on ceramic substrates. The probe is equipped with an optical multi-fiber line ending at the front of the probe tip. It is connected to the EOC box on the robot arm and provides an automatic detection of the phantom surface. Half of the fibers are connected to a pulsed infrared transmitter, the other half to a synchronized receiver. As the probe approaches the surface, the reflection from the surface produces a coupling from the transmitting to the receiving fibers. This reflection increases first during the approach, reaches maximum and then decreases. If the probe is flatly touching the surface, the coupling is zero. The distance of the coupling maximum to the surface is independent of the surface reflectivity and largely independent of the surface to probe angle. The DASY software reads the reflection during a software approach and looks for the maximum using a 2nd order fitting. The approach is stopped when reaching the maximum.

4.1.1 E-Field Probe Specification

Construction	Symmetrical design with triangular core
	Built-in shielding against static charges
	PEEK enclosure material (resistant to organic solvents, e.g., DGBE)
Calibration	ISO/IEC 17025 calibration service available
Frequency	10 MHz to > 6 GHz
	Linearity: ± 0.2 dB (30 MHz to 6 GHz)
Directivity	±0.3 dB in brain tissue (rotation around probe axis)
	±0.5 dB in brain tissue (rotation normal probe axis)
Dimensions	Overall length: 337 mm (Tip: 20 mm)
	Tip diameter: 2.5 mm (Body: 12 mm)
	Typical distance from probe tip to dipole centers: 1 mm

Figure 3. E-field Probe

Figure 4. Probe setup on robot

4.1.2 E-Field Probe Calibration process

Dosimetric Assessment Procedure

Each E-Probe/Probe Amplifier combination has unique calibration parameters. A TEM cell calibration procedure is conducted to determine the proper amplifier settings to enter in the probe parameters. The amplifier settings are determined for a given frequency by subjecting the probe to a known E-field density (1 mW/cm^2) using an RF Signal generator, TEM cell, and RF Power Meter.

Free Space Assessment

The free space E-field from amplified probe outputs is determined in a test chamber. This calibration can be performed in a TEM cell if the frequency is below 1 GHz and in a waveguide or other methodologies above 1 GHz for free space. For the free space calibration, the probe is placed in the volumetric center of the cavity and at the proper orientation with the field. The probe is rotated 360 degrees until the three channels show the maximum reading. The power density readings equates to 1 mW/cm^2.

Temperature Assessment

E-field temperature correlation calibration is performed in a flat phantom filled with the appropriate simulated head tissue. The E-field in the medium correlates with the temperature rise in the dielectric medium. For temperature correlation calibration a RF transparent thermistor-based temperature probe is used in conjunction with the E-field probe.

$$SAR = C\frac{\Delta T}{\Delta t}$$

Where：

Δt = Exposure time (30 seconds),

C = Heat capacity of tissue (head or body),

ΔT = Temperature increase due to RF exposure.

Or $$SAR = \frac{|E|^2 \sigma}{\rho}$$

Where：

σ = Simulated tissue conductivity,

ρ = Tissue density (kg/m^3).

4.2 Data Acquisition Electronic (DAE) System

Model： DAE3, DAE4

Construction： Signal amplifier, multiplexer, A/D converter and control logic. Serial optical link for communication with DASY4/5 embedded system (fully remote controlled). Two step probe touch detector for mechanical surface detection and emergency robot stop.

Measurement Range：-100 to +300 mV (16 bit resolution and two range settings: 4mV, 400mV)

Input Offset Voltage： < 5μV (with auto zero)

Input Bias Current： < 50 fA

Dimensions： 60 x 60 x 68 mm

4.3 Robot

Positioner： Stäubli Unimation Corp. Robot Model: TX90XL

Repeatability： ±0.02 mm

No. of Axis： 6

4.4 Measurement Server

Processor： PC/104 with a 400MHz intel ULV Celeron

I/O-board： Link to DAE4 (or DAE3)
16-bit A/D converter for surface detection system
Digital I/O interface
Serial link to robot
Direct emergency stop output for robot

©2015 A Test Lab Techno Corp.

4.5 Device Holder

The DASY device holder is constructed of low-loss POM material having the following dielectric parameters: relative permittivity ε=3 and loss tangent δ=0.02. The amount of dielectric material has been reduced in the closest vicinity of the device, since measurements have suggested that the influence of the clamp on the test results could thus be lowered.

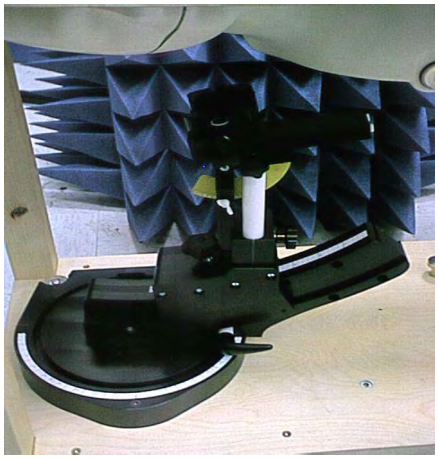

Figure 5. Device Holder

4.6 Oval Flat Phantom - ELI 5.0

The shell corresponds to the specifications of the Specific Anthropomorphic Mannequin (Oval Flat) phantom defined in IEEE 1528-2013, CENELEC 50361 and IEC 62209. It enables the dosimetric evaluation of wireless portable device usage as well as body mounted usage at the flat phantom region. A cover prevents evaporation of the liquid. Reference markings on the phantom allow the complete setup of all predefined phantom positions and measurement grids by manually teaching three points with the robot.

Shell Thickness	2 ±0.2 mm
Filling Volume	Approx. 30 liters
Dimensions	190×600×400 mm (H×L×W)

Table 1. Specification of ELI 5.0

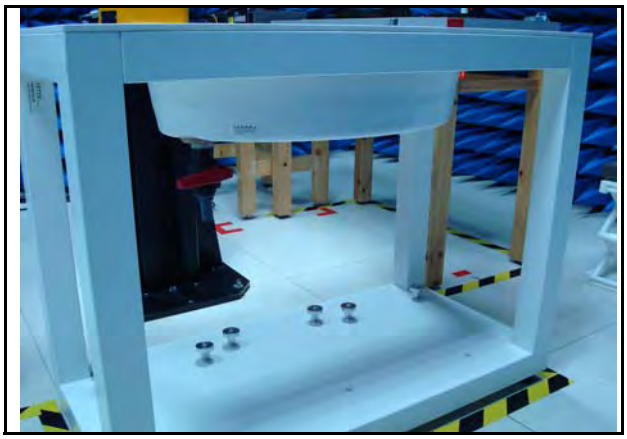

Figure 6. Oval Flat Phantom

4.7 Data Storage and Evaluation

4.7.1 Data Storage

The DASY software stores the assessed data from the data acquisition electronics as raw data (in microvolt readings from the probe sensors), together with all the necessary software parameters for the data evaluation (probe calibration data, liquid parameters and device frequency and modulation data) in measurement files with the extension DA4 or DA5. The post processing software evaluates the desired unit and format for output each time the data is visualized or exported. This allows verification of the complete software setup even after the measurement and allows correction of erroneous parameter settings. For example, if a measurement has been performed with an incorrect crest factor parameter in the device setup, the parameter can be corrected afterwards and the data can be reevaluated.

©2015 A Test Lab Techno Corp.

4.7.2 Data Evaluation

The DASY post processing software (SEMCAD) automatically executes the following procedures to calculate the field units from the microvolt readings at the probe connector. The parameters used in the evaluation are stored in the configuration modules of the software：

Probe parameters：	- Sensitivity	*Normi, ai0, ai1, ai2*
	- Conversion factor	*ConvFi*
	- Diode compression point	*dcpi*
Device parameters：	- Frequency	*f*
	- Crest factor	*cf*
Media parameters：	- Conductivity	*σ*
	- Density	*ρ*

These parameters must be set correctly in the software. They can be found in the component documents or they can be imported into the software from the configuration files issued for the DASY components. In the direct measuring mode of the multimeter option, the parameters of the actual system setup are used. In the scan visualization and export modes, the parameters stored in the corresponding document files are used.
The first step of the evaluation is a linearization of the filtered input signal to account for the compression characteristics of the detector diode. The compensation depends on the input signal, the diode type and the DC-transmission factor from the diode to the evaluation electronics. If the exciting field is pulsed, the crest factor of the signal must be known to correctly compensate for peak power. The formula for each channel can be given as：

$$V_i = U_i + U_i^2 \cdot \frac{cf}{dcp_i}$$

With *Vi* = compensated signal of channel i (i = x, y, z)
Ui = input signal of channel i (i = x, y, z)
cf = crest factor of exciting field (DASY parameter)
dcpi = diode compression point (DASY parameter)

From the compensated input signals the primary field data for each channel can be evaluated：

E-field probes： $$E_i = \sqrt{\frac{V_i}{Norm_i \cdot ConvF}}$$

H-field probes：

$$H_i = \sqrt{V_i} \cdot \frac{a_{i0} + a_{i1} f + a_{i2} f^2}{f}$$

with *Vi* = compensated signal of channel i (i = x, y, z)
Normi= sensor sensitivity of channel i (i = x, y, z)
μV/(V/m)2 for E-field Probes
ConvF = sensitivity enhancement in solution
aij = sensor sensitivity factors for H-field probes
f = carrier frequency [GHz]
Ei = electric field strength of channel i in V/*m*
Hi = magnetic field strength of channel i in A/m

The RSS value of the field components gives the total field strength (Hermitian magnitude)：

$$E_{tot} = \sqrt{E_x^2 + E_y^2 + E_z^2}$$

The primary field data are used to calculate the derived field units.

$$SAR = E_{tot}^2 \cdot \frac{\sigma}{\rho \cdot 1000}$$

with *SAR* = local specific absorption rate in mW/g
Etot = total field strength in V/m
σ = conductivity in [mho/m] or [Siemens/m]
ρ = equivalent tissue density in g/cm3

∗Note：That the density is set to 1, to account for actual head tissue density rather than the density of the tissue simulating liquid.

The power flow density is calculated assuming the excitation field to be a free space field.

$$P_{pwe} = \frac{E_{tot}^2}{3770} \quad \text{or} \quad P_{pwe} = \frac{H_{tot}^2}{37.7}$$

with *Ppwe* = equivalent power density of a plane wave in mW/cm2
Etot = total electric field strength in V/m
Htot = total magnetic field strength in A/m

5. *Tissue Simulating Liquids*

The mixture is calibrated to obtain proper dielectric constant (permittivity) and conductivity of the tissue.
The dielectric parameters of the liquids were verified prior to the SAR evaluation using an 85070C Dielectric Probe Kit and an E5071B Network Analyzer.

IEEE SCC-34/SC-2 in 1528 recommended Tissue Dielectric Parameters

The head tissue dielectric parameters recommended by the IEEE SCC-34/SC-2 in 1528 have been incorporated in the following table. These head parameters are derived from planar layer models simulating the highest expected SAR for the dielectric properties and tissue thickness variations in human head. Other head and body tissue parameters that have not been specified in 1528 are derived from the tissue dielectric parameters computed from the 4-Cole-Cole equation and extrapolated according to the head parameter specified in 1528.

Target Frequency	Head		Body	
(MHz)	εr	σ (S/m)	εr	σ (S/m)
150	52.3	0.76	61.9	0.80
300	45.3	0.87	58.2	0.92
450	43.5	0.87	56.7	0.94
835	41.5	0.90	55.2	0.97
900	41.5	0.97	55.0	1.05
915	41.5	0.98	55.0	1.06
1450	40.5	1.20	54.0	1.30
1610	40.3	1.29	53.8	1.40
1800 - 2000	40.0	1.40	53.3	1.52
2450	39.2	1.80	52.7	1.95
3000	38.5	2.40	52.0	2.73
5800	35.3	5.27	48.2	6.00
(εr = relative permittivity, σ = conductivity and ρ = 1000 kg/m3)				

Table 2. Tissue dielectric parameters for head and body phantoms

5.1 Ingredients

The following ingredients are used:

- Water: deionized water (pure H_20), resistivity ≥ 16 M Ω -as basis for the liquid
- Sugar: refied white sugar (typically 99.7 % sucrose, available as crystal sugar in food shops) -to reduce relative permittivity
- Salt: pure NaCl -to increase conductivity
- Cellulose: Hydroxyethyl-cellulose, medium viscosity (75-125 mPa.s, 2% in water, 20 °C), CAS # 54290 -to increase viscosity and to keep sugar in solution.
- Preservative: Preventol D-7 Bayer AG, D-51368 Leverkusen, CAS # 55965-84-9 -to prevent the spread of bacteria and molds
- DGBE: Diethylenglycol-monobuthyl ether (DGBE), Fluka Chemie GmbH, CAS # 112-34-5 -to reduce relative permittivity

5.2 Recipes

The following tables give the recipes for tissue simulating liquids to be used in different frequency bands.
Note: The goal dielectric parameters (at 22 ℃) must be achieved within a tolerance of ±5% for εand ±5% for σ.

Ingredients (% by weight)	Frequency (MHz)											
	750		835		1750		1900		2450		2600	
Tissue Type	Head	Body	Head	Body	Head	Body	Head	Body	Head	Body	Head	Body
Water	39.28	51.30	41.45	52.40	54.50	40.20	54.90	40.40	62.70	73.20	60.30	71.40
Salt (NaCl)	1.47	1.42	1.45	1.50	0.17	0.49	0.18	0.50	0.50	0.10	0.60	0.20
Sugar	58.15	46.18	56.00	45.00	0.00	0.00	0.00	0.00	0.00	0.00	0.00	0.00
HEC	1.00	1.00	1.00	1.00	0.00	0.00	0.00	0.00	0.00	0.00	0.00	0.00
Bactericide	0.10	0.10	0.10	0.10	0.00	0.00	0.00	0.00	0.00	0.00	0.00	0.00
Triton X-100	0.00	0.00	0.00	0.00	0.00	0.00	0.00	0.00	0.00	0.00	0.00	0.00
DGBE	0.00	0.00	0.00	0.00	45.33	59.31	44.92	59.10	36.80	26.70	39.10	28.40
Dielectric Constant	41.88	54.60	42.54	56.10	40.10	53.60	39.90	54.00	39.80	52.50	39.80	52.50
Conductivity (S/m)	0.90	0.97	0.91	0.95	1.39	1.49	1.42	1.45	1.88	1.78	1.88	1.78

Salt: 99^+% Pure Sodium Chloride Sugar: 98^+% Pure Sucrose
Water: De-ionized, 16 MΩ$^+$ resistivity HEC: Hydroxyethyl Cellulose
DGBE: 99^+% Di(ethylene glycol) butyl ether, [2-(2-butoxyethoxy)ethanol]
Triton X-100 (ultra pure): Polyethylene glycol mono [4-(1,1, 3, 3-tetramethylbutyl)phenyl]ether

©2015 A Test Lab Techno Corp.

5.3 Liquid Depth

According to KDB865664 ,the depth of tissue-equivalent liquid in a phantom must be ≥ 15.0 cm with ≤ ± 0.5 cm variation for SAR measurements ≤ 3 GHz and ≥ 10.0 cm with ≤ ± 0.5 cm variation for measurements > 3 GHz.

Figure 7. Body-Position

6. SAR Testing with RF Transmitters

6.1 SAR Testing with 802.11 Transmitters

SAR test reduction for 802.11 Wi-Fi transmission mode configurations are considered separately for DSSS and OFDM. An initial test position is determined to reduce the number of tests required for certain exposure configurations with multiple test positions. An initial test configuration is determined for each frequency band and aggregated band according to maximum output power, channel bandwidth, wireless mode configurations and other operating parameters to streamline the measurement requirements. For 2.4 GHz DSSS, either the initial test position or DSSS procedure is applied to reduce the number of SAR tests; these are mutually exclusive. For OFDM, an initial test position is only applicable to next to the ear, UMPC mini-tablet and hotspot mode configurations, which is tested using the initial test configuration to facilitate test reduction. For other exposure conditions with a fixed test position, SAR test reduction is determined using only the initial test configuration.

The multiple test positions require SAR measurements in head, hotspot mode or UMPC mini-tablet configurations may be reduced according to the highest reported SAR determined using the initial test position(s) by applying the DSSS or OFDM SAR measurement procedures in the required wireless mode test configuration(s). The initial test position(s) is measured using the highest measured maximum output power channel in the required wireless mode test configuration(s). When the reported SAR for the initial test position is:

- ≤ 0.4 W/kg, further SAR measurement is not required for the other test positions in that exposure configuration and wireless mode combination within the frequency band or aggregated band. DSSS and OFDM configurations are considered separately according to the required SAR procedures.
- > 0.4 W/kg, SAR is repeated using the same wireless mode test configuration tested in the initial test position to measure the subsequent next closet/smallest test separation distance and maximum coupling test position, on the highest maximum output power channel, until the reported SAR is ≤ 0.8 W/kg or all required test positions are tested.
  - For subsequent test positions with equivalent test separation distance or when exposure is dominated by coupling conditions, the position for maximum coupling condition should be tested.
  - When it is unclear, all equivalent conditions must be tested.
- For all positions/configurations tested using the initial test position and subsequent test positions, when the reported SAR is > 0.8 W/kg, measure the SAR for these positions/configurations on the subsequent next highest measured output power channel(s) until the reported SAR is ≤ 1.2 W/kg or all required test channels are considered.
  - The additional power measurements required for this step should be limited to those necessary for identifying subsequent highest output power channels to apply the test reduction.
- When the specified maximum output power is the same for both UNII 1 and UNII 2A, begin SAR measurements in UNII 2A with the channel with the highest measured output power. If the reported SAR for UNII 2A is ≤ 1.2 W/kg, SAR is not required for UNII 1; otherwise treat the remaining bands separately and test them independently for SAR.
- When the specified maximum output power is different between UNII 1 and UNII 2A, begin SAR with the band that has the higher specified maximum output. If the highest reported SAR for the band with the highest specified power is ≤ 1.2 W/kg, testing for the band with the lower specified output power is not required; otherwise test the remaining bands independently for SAR.

To determine the initial test position, Area Scans were performed to determine the position with the Maximum Value of SAR (measured). The position that produced the highest Maximum Value of SAR is considered the worst case position; thus used as the initial test position.

©2015 A Test Lab Techno Corp.

6.2 Conducted Power

Band	Data Rate	CH	Frequency (MHz)	Average Power (dBm)
IEEE 802.11b	1 M	1	2412.0	0.18
		2	2417.0	15.98
		6	2437.0	17.58
		11	2462.0	17.75
	2 M	6	2437.0	17.39
	5.5 M	6	2437.0	17.28
	11 M	6	2437.0	17.22
IEEE 802.11g	6 M	1	2412.0	0.64
		2	2417.0	11.61
		6	2437.0	12.40
		11	2462.0	12.43
	9 M	6	2437.0	12.22
	12 M	6	2437.0	12.20
	18 M	6	2437.0	12.17
	24 M	6	2437.0	12.08
	36 M	6	2437.0	12.00
	48 M	6	2437.0	11.99
	54 M	6	2437.0	11.95
IEEE 802.11n (2.4 GHz) 20MHz	6.5 M	1	2412.0	-2.46
		2	2417.0	10.45
		6	2437.0	11.42
		11	2462.0	11.35
	13 M	6	2437.0	11.20
	19.5 M	6	2437.0	11.16
	26 M	6	2437.0	11.14
	39 M	6	2437.0	11.08
	52 M	6	2437.0	11.00
	58.5 M	6	2437.0	10.98
	65 M	6	2437.0	10.93
IEEE 802.11n (2.4 GHz) 40MHz	13.5 M	3	2422.0	4.00
		4	2427.0	10.60
		6	2437.0	10.65
		9	2452.0	10.71
	27 M	6	2437.0	10.53
	40.5 M	6	2437.0	10.46
	54 M	6	2437.0	10.40
	81 M	6	2437.0	10.37
	108 M	6	2437.0	10.35
	121.5 M	6	2437.0	10.33
	135 M	6	2437.0	10.30

Band	Packet Type	CH	Frequency (MHz)	Average Power (dBm)
Bluetooth LE	---	2402	0	-3.82
		2440	19	-3.52
		2480	39	-3.49

©2015 A Test Lab Techno Corp.

6.3 Antenna location

Antenna-User	
Antenna account	Distance
WLAN_Bluetooth Antenna to Side 1	40mm
WLAN_Bluetooth Antenna to Side 2	5mm
WLAN_Bluetooth Antenna to Side 3	7mm
WLAN_Bluetooth Antenna to Side 4	170mm
WLAN_Bluetooth Antenna to Side 5	10mm
WLAN_Bluetooth Antenna to Side 6	51mm

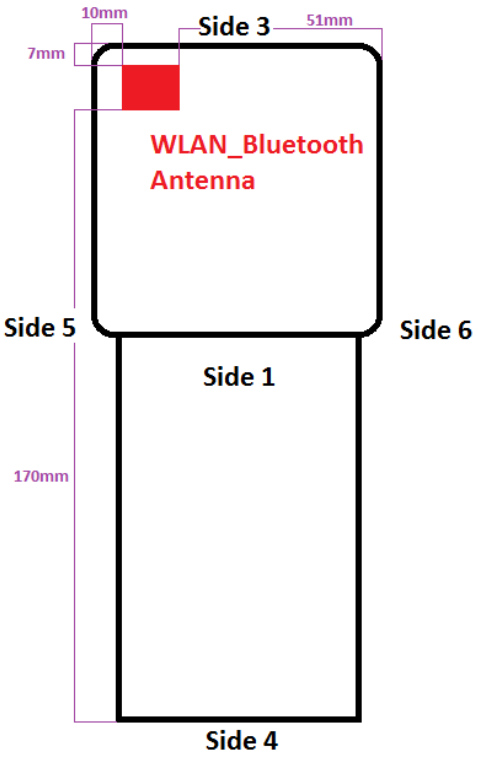

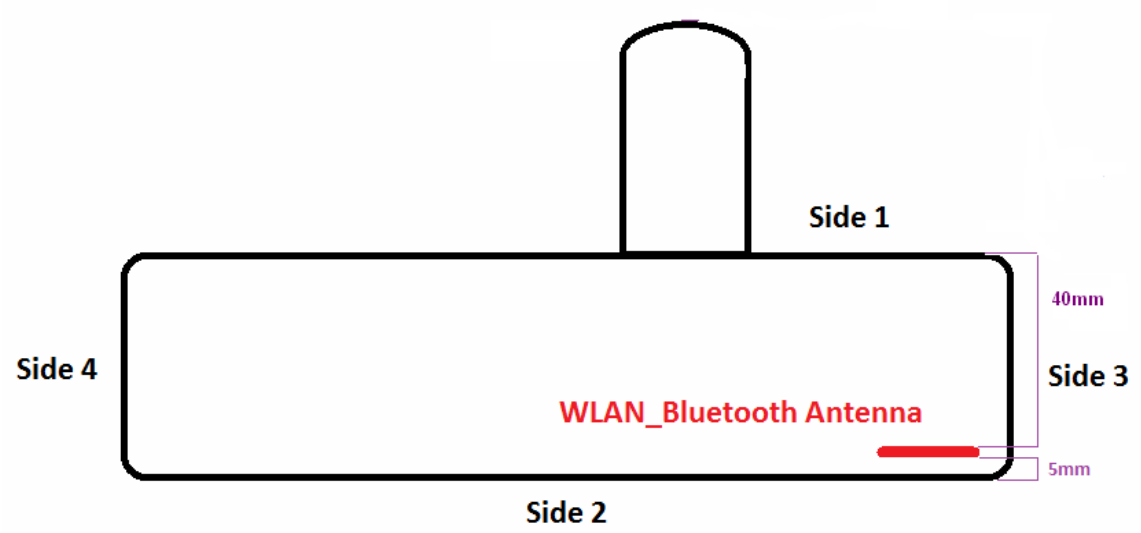
Side 1
40mm
Side 4
Side 3
WLAN_Bluetooth Antenna
5mm
Side 2

6.4 Stand-alone SAR Evaluate

Transmitter and antenna implementation as below:

Band	WLAN Antenna	Bluetooth Antenna
WLAN	V	---
Bluetooth	---	V

Stand-alone transmission configurations as below:

Band	Side 1	Side 2	Side 3	Side 4	Side 5	Side 6
IEEE 802.11b	---	V	V	---	V	---
IEEE 802.11g	---	V	V	---	V	---
IEEE 802.11n (2.4GHz) 20MHz	---	V	V	---	---	---
IEEE 802.11n (2.4GHz) 40MHz	---	V	---	---	---	---
Bluetooth LE	---	---	---	---	---	---

Note: The "-" on behalf of Stand-alone SAR is not required (Refer to KDB447498 D01 v05r02 4.3.1 for the Standalone SAR test exclusion considerations)

©2015 A Test Lab Techno Corp.

≤ 50 mm										
Antenna	Side	Band	Channel	Power (dBm)	Frequency (GHz)	Distance (mm)	Power (mW)	Result	Limit	Exclusion Considerations SAR[1g]
WLAN_Bluetooth Antenna	1	IEEE 802.11b	11	18	2.462	40	63	2.5	3	SAR is not required
		IEEE 802.11g	11	13	2.462	40	20	0.8	3	SAR is not required
		IEEE 802.11n (2.4GHz) 20MHz	6	12	2.437	40	16	0.6	3	SAR is not required
		IEEE 802.11n (2.4GHz) 40MHz	9	11	2.452	40	13	0.5	3	SAR is not required
		Bluetooth LE	39	-3	2.48	5	1	0.3	3	SAR is not required
WLAN_Bluetooth Antenna	2	IEEE 802.11b	11	18	2.462	5	63	19.8	3	SAR is required
		IEEE 802.11g	11	13	2.462	5	20	6.3	3	SAR is required
		IEEE 802.11n (2.4GHz) 20MHz	6	12	2.437	5	16	5	3	SAR is required
		IEEE 802.11n (2.4GHz) 40MHz	9	11	2.452	5	13	4.1	3	SAR is required
		Bluetooth LE	39	-3	2.48	5	1	0.3	3	SAR is not required
WLAN_Bluetooth Antenna	3	IEEE 802.11b	11	18	2.462	7	63	14.1	3	SAR is required
		IEEE 802.11g	11	13	2.462	7	20	4.5	3	SAR is required
		IEEE 802.11n (2.4GHz) 20MHz	6	12	2.437	7	16	3.6	3	SAR is required
		IEEE 802.11n (2.4GHz) 40MHz	9	11	2.452	7	13	2.9	3	SAR is not required
		Bluetooth LE	39	-3	2.48	7	1	0.2	3	SAR is not required
WLAN_Bluetooth Antenna	5	IEEE 802.11b	11	18	2.462	10	63	9.9	3	SAR is required
		IEEE 802.11g	11	13	2.462	10	20	3.1	3	SAR is required
		IEEE 802.11n (2.4GHz) 20MHz	6	12	2.437	10	16	2.5	3	SAR is not required
		IEEE 802.11n (2.4GHz) 40MHz	9	11	2.452	10	13	2	3	SAR is not required
		Bluetooth LE	39	-3	2.48	10	1	0.2	3	SAR is not required

Note: 1.The test reduction for distance less than 50mm. Use the max power to make sure minimum distance by evaluated for SAR testing .

2. When KDB Publication 447498 SAR test exclusion is applies , SAR is not required for 2.4G OFDM configuratio.

©2015 A Test Lab Techno Corp.

> 50 mm <200mm									
Antenna	Side	Band	Channel	Power (dBm)	Frequency (GHz)	Distance (mm)	Power (mW)	Power Thresholds SAR^{1g} (mW)	Exclusion Considerations SAR^{1g}
WLAN_Bluetooth Antenna	4	IEEE 802.11b	11	18	2.462	170	63	1296	SAR is not required
		IEEE 802.11g	11	13	2.462	170	20	1296	SAR is not required
		IEEE 802.11n (2.4GHz) 20MHz	6	12	2.437	170	16	1296	SAR is not required
		IEEE 802.11n (2.4GHz) 40MHz	9	11	2.452	170	13	1296	SAR is not required
		Bluetooth LE	39	-3	2.48	170	1	1295	SAR is not required
WLAN_Bluetooth Antenna	6	IEEE 802.11b	11	18	2.462	51	63	106	SAR is not required
		IEEE 802.11g	11	13	2.462	51	20	106	SAR is not required
		IEEE 802.11n (2.4GHz) 20MHz	6	12	2.437	51	16	106	SAR is not required
		IEEE 802.11n (2.4GHz) 40MHz	9	11	2.452	51	13	106	SAR is not required
		Bluetooth LE	39	-3	2.48	51	1	105	SAR is not required

Note: 1.The test reduction for distance more than 50mm. Use the max power to make sure minimum distance by evaluated for SAR testing.

2. For antenna to edge more than 50 mm that sar test is not required when the minimun distance(worst case) evaluated by results of above.

6.5 Simultaneous Transmitting Evaluate

Simultaneous transmission configurations as below:

Condition	Side	Frequency Band	
		WLAN Antenna	Bluetooth Antenna
1	1	V	V
2	2	V	V
3	3	V	V
4	4	V	V
5	5	V	V
6	6	V	V

6.5.1 Estimated SAR

≤ 50 mm								
Antenna	Side	Band	Channel	Power-Tune up (dBm)	Frequency (GHz)	Distance (mm)	Power (mW)	Estimated SAR[1g] (W/Kg)
WLAN_Bluetooth Antenna	1	IEEE 802.11b	11	18	2.462	40	63	0.33
		IEEE 802.11g	11	13	2.462	40	20	0.105
		IEEE 802.11n (2.4GHz) 20MHz	11	12	2.462	40	16	0.084
		IEEE 802.11n (2.4GHz) 40MHz	9	11	2.452	40	13	0.068
		Bluetooth LE	39	-3	2.48	40	1	0.005
	2	Bluetooth LE	39	-3	2.48	5	1	0.042
	3	Bluetooth LE	39	-3	2.48	7	1	0.03
	5	Bluetooth LE	39	-3	2.48	10	1	0.021

> 50 mm			
Antenna	Side	Band	Estimated SAR[1g] (W/Kg)
WLAN_Bluetooth Antenna	4	IEEE 802.11b	0.4
		IEEE 802.11g	0.4
		IEEE 802.11n (2.4GHz) 20MHz	0.4
		IEEE 802.11n (2.4GHz) 40MHz	0.4
		Bluetooth LE	0.4
	6	IEEE 802.11b	0.4
		IEEE 802.11g	0.4
		IEEE 802.11n (2.4GHz) 20MHz	0.4
		IEEE 802.11n (2.4GHz) 40MHz	0.4
		Bluetooth LE	0.4

©2015 A Test Lab Techno Corp.

6.5.2 Sum of 1-g SAR of all simultaneously transmitting

When the sum of 1-g SAR of all simultaneously transmitting antennas in and operating mode and exposure condition combination is within the SAR limit, SAR test exclusion applies to that simultaneous transmission configuration.

Sum of 1-g SAR of summary as below:

Phantom Position		Spacing (mm)	ASSY	WLAN Antenna		Bluetooth Antenna		∑ SAR1g (W/Kg)	Event
				Band	SAR1g (W/Kg)	Band	SAR1g (W/Kg)		
Flat	Side 1	0	N/A	802.11b	*0.33	Bluetooth LE	*0.005	0.335	<1.6
	Side 2	0	N/A	802.11b	1.19	Bluetooth LE	*0.042	1.232	<1.6
	Side 3	0	N/A	802.11b	0.168	Bluetooth LE	*0.03	0.198	<1.6
	Side 4	0	N/A	802.11b	**0.4	Bluetooth LE	**0.4	0.8	<1.6
	Side 5	0	N/A	802.11b	0.123	Bluetooth LE	*0.021	0.144	<1.6
	Side 6	0	N/A	802.11b	**0.4	Bluetooth LE	**0.4	0.8	<1.6

Note:

1.*=Estimated SAR

2.**The Estimated SAR 0.4W/Kg , test separation distances is > 50 mm .

3. When the sum of 1-g SAR of all simultaneously transmitting antennas in and operating mode and exposure condition combination is within the SAR limit, SAR test exclusion applies to that simultaneous transmission configuration.

©2015 A Test Lab Techno Corp.

6.5.3 SAR to peak location separation ratio (SPLSR)

When the sum of SAR is larger than the limit, SAR test exclusion is determined by the SAR to peak location separation ratio. The ratio is determined by (SAR1 + SAR2)^1.5/Ri, rounded to two decimal digits, and must be ≤ 0.04 for all antenna pairs in the configuration to qualify for 1-g SAR test exclusion.

All of sum of SAR < 1.6 W/Kg, therefore SPLSR is not required.

6.6 SAR test reduction according to KDB

General:

- The test data reported are the worst-case SAR value with the position set in a typical configuration. Test procedures used were according to FCC, IEEE1528-2013.
- All modes of operation were investigated, and worst-case results are reported.
- Tissue parameters and temperatures are listed on the SAR plots.
- Batteries are fully charged for all readings.
- When the Channel's SAR 1g of maximum conducted power is > 0.8 mW/g, low, middle and high channel are supposed to be tested.

KDB 447498:

- The test data reported are the worst-case SAR value with the position set in a typical configuration. Test procedures used were according to IEEE1528-2013.

©2015 A Test Lab Techno Corp.

7. System Verification and Validation

7.1 Symmetric Dipoles for System Verification

Construction	Symmetrical dipole with l/4 balun enables measurement of feed point impedance with NWA matched for use near flat phantoms filled with head simulating solutions Includes distance holder and tripod adaptor Calibration Calibrated SAR value for specified position and input power at the flat phantom in head simulating solutions.
Frequency	2450 MHz
Return Loss	> 20 dB at specified verification position
Power Capability	> 100 W (f < 1GHz); > 40 W (f > 1GHz)
Options	Dipoles for other frequencies or solutions and other calibration conditions are available upon request
Dimensions	D2450V2: dipole length 51.5 mm; overall height 300 mm

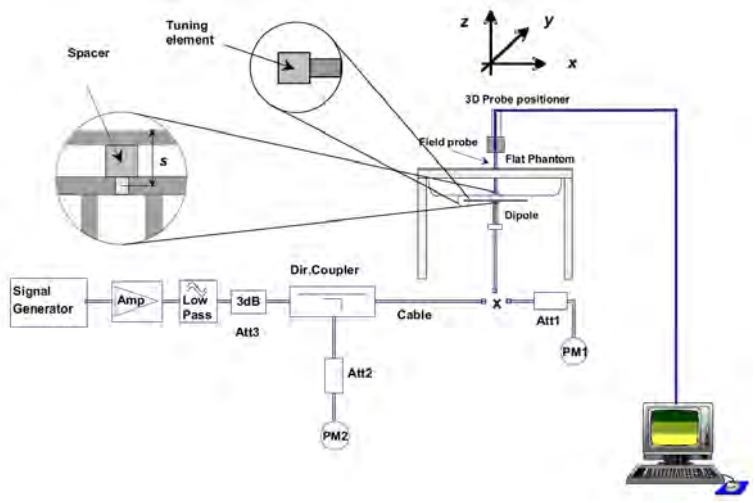

Figure 8. System Verification Setup Diagram

Figure 9. Validation Kit

7.2 Liquid Parameters

Liquid Verify								
Ambient Temperature： 22 ± 2 °C；Relative Humidity：40 -70%								
Liquid Type	Frequency	Temp (°C)	Parameters	Target Value	Measured Value	Deviation (%)	Limit (%)	Measured Date
2450MHz (Body)	2400MHz	22.0	εr	52.77	51.25	-2.88%	± 5	2015/08/13
			σ	1.902	1.882	-1.05%	± 5	
	2450MHz	22.0	εr	52.70	51.18	-2.88%	± 5	
			σ	1.950	1.962	0.62%	± 5	
	2500MHz	22.0	εr	52.64	50.99	-3.13%	± 5	
			σ	2.021	2.020	-0.05%	± 5	
2450MHz (Body)	2400MHz	22.0	εr	52.77	51.25	-2.88%	± 5	2015/08/17
			σ	1.902	1.882	-1.05%	± 5	
	2450MHz	22.0	εr	52.70	51.18	-2.88%	± 5	
			σ	1.950	1.962	0.62%	± 5	
	2500MHz	22.0	εr	52.64	50.99	-3.13%	± 5	
			σ	2.021	2.020	-0.05%	± 5	

Table 3. Measured Tissue dielectric parameters for body phantoms -2

©2015 A Test Lab Techno Corp.

7.3 Verification Summary

Prior to the assessment, the system validation kit was used to test whether the system was operating within its specifications of ± 7%. The verification was performed at 2450 MHz.

Mixture Type	Frequency (MHz)	Power	SAR_{1g} (W/Kg)	SAR_{10g} (W/Kg)	Drift (dB)	Difference percentage		Probe	Dipole	1W Target		Date
						1g	10g	Model / Serial No.	Model / Serial No.	SAR_{1g} (W/Kg)	SAR_{10g} (W/Kg)	
Body	2450	250 mW	13.5	6.29	-0.03	2.10%	3.10%	EX3DV4 SN3847	D2450V2 SN712	52.90	24.40	Aug.13,2015
		Normalize to 1 Watt	54.00	25.16								
Body	2450	250 mW	13.2	6.17	-0.06	-0.20%	1.10%	EX3DV4 SN3847	D2450V2 SN712	52.90	24.40	Aug.17,2015
		Normalize to 1 Watt	52.80	24.68								

©2015 A Test Lab Techno Corp.

7.4 Validation Summary

Per FCC KDB 865664 D02v01r01, SAR system validation status should be documented to confirm measurement accuracy. The SAR systems (including SAR probes, system components and software versions) used for this device were validated against its performance specifications prior to the SAR measurements. Reference dipoles were used with the required tissue- equivalent media for system validation, according to the procedures outlined in IEEE 1528-2013 and FCC KDB 865664 D01v01r04. Since SAR probe calibrations are frequency dependent, each probe calibration point was validated at a frequency within the valid frequency range of the probe calibration point, using the system that normally operates with the probe for routine SAR measurements and according to the required tissue-equivalent media.

A tabulated summary of the system validation status including the validation date(s), measurement frequencies, SAR probes and tissue dielectric parameters as below.

Probe Type Model / Serial No.	Prob Cal. Point (MHz)	Head / Body	Cond.	Perm.	CW Validation			Mod. Validation			Date
			εr	σ	Sensitivity	Probe Linearity	Probe Isotropy	Mod. Type	Duty Factor	PAR	
EX3DV4 SN:3847	2450	Body	51.18	1.962	Pass	Pass	Pass	DSSS OFDM	Pass	Pass	Aug.13, 2015
EX3DV4 SN:3847	2450	Body	51.18	1.962	Pass	Pass	Pass	DSSS OFDM	Pass	Pass	Aug.17, 2015

©2015 A Test Lab Techno Corp.

8. Test Equipment List

Manufacturer	Name of Equipment	Type/Model	Serial Number	Calibration	
				Last Cal.	Due Date
SPEAG	2450MHz System Validation Kit	D2450V2	712	Mar. 12, 2015	Mar. 12, 2016
SPEAG	Dosimetric E-Field Probe	EX3DV4	3847	Jan. 30, 2015	Jan. 30, 2016
SPEAG	Data Acquisition Electronics	DAE4	541	Feb. 03, 2015	Feb. 03, 2016
SPEAG	Device Holder	N/A	N/A	NCR	
SPEAG	Measurement Server	SE UMS 011 AA	1025	NCR	
SPEAG	Phantom	ELI v5.0	TP-1133	NCR	
SPEAG	Robot	Staubli TX90XL	F07/564ZA1/C/01	NCR	
SPEAG	Software	DASY52 V52.8 (8)	N/A	NCR	
SPEAG	Software	SEMCAD X V14.6.10 (7331)	N/A	NCR	
Agilent	Dielectric Probe Kit	85070C	US99360094	NCR	
Agilent	ENA Series Network Analyzer	E5071B	MY42404655	Apr. 10, 2015	Apr. 10, 2016
R&S	Power Sensor	NRP-Z22	100179	Jun. 01, 2015	Jun. 01, 2016
Agilent	Power Sensor	8481H	3318A20779	Jun. 15, 2015	Jun. 15, 2016
Agilent	Power Meter	EDM Series E4418B	GB40206143	Jun. 15, 2015	Jun. 15, 2016
Anritsu	Power Meter	ML2495A	1135009	Aug. 21, 2014	Aug. 21, 2015
Agilent	MXF-G-B RF Vector Signal Generator	N5182B	MY53050382	May 28, 2015	May 28, 2016
Agilent	Dual Directional Coupler	778D	50334	NCR	
Mini-Circuits	Power Amplifier	ZHL-42W-SMA	D111103#5	NCR	
Mini-Circuits	Power Amplifier	ZVE-8G-SMA	D042005 671800514	NCR	
Aisi	Attenuator	IEAT 3dB	N/A	NCR	

Table 4. Test Equipment List

©2015 A Test Lab Techno Corp.

9. Measurement Uncertainty

Measurement uncertainties in SAR measurements are difficult to quantify due to several variables including biological, physiological, and environmental. However, we estimate the measurement uncertainties in SAR to be less than ±21.76 % for 300MHz ~3GHz and 3GHz ~ 6GHz ±25.68 %〔8〕. The frequency range of the measurement uncertainty are 300MHz ~ 3GHz ±10.88 % and 3GHz ~ 6GHz ±12.84%

According to Std. C95.3〔9〕, the overall uncertainties are difficult to assess and will vary with the type of meter and usage situation. However, accuracy's of ±1 to 3 dB can be expected in practice, with greater uncertainties in near-field situations and at higher frequencies (shorter wavelengths), or areas where large reflecting objects are present. Under optimum measurement conditions, SAR measurement uncertainties of at least ±2dB can be expected.

©2015 A Test Lab Techno Corp.

Item	Uncertainty Component	Uncertainty Value	Prob. Dist	Div.	c_i (1g)	c_i (10g)	Std. Unc. （1-g）	Std. Unc. （10-g）	v_i or V_{eff}
Measurement System									
u1	Probe Calibration (k=1)	±6.0%	Normal	1	1	1	±6.0%	±6.0%	∞
u2	Axial Isotropy	±4.7%	Rectangular	$\sqrt{3}$	0.7	0.7	±1.9%	±1.9%	∞
u3	Hemispherical Isotropy	±9.6%	Rectangular	$\sqrt{3}$	0.7	0.7	±3.9%	±3.9%	
u4	Boundary Effect	±1.0%	Rectangular	$\sqrt{3}$	1	1	±0.6%	±0.6%	∞
u5	Linearity	±4.7%	Rectangular	$\sqrt{3}$	1	1	±2.7%	±2.7%	∞
u6	System Detection Limit	±1.0%	Rectangular	$\sqrt{3}$	1	1	±0.6%	±0.6%	∞
u7	Readout Electronics	±0.3%	Normal	1	1	1	±0.3%	±0.3%	∞
u8	Response Time	±0.8%	Rectangular	$\sqrt{3}$	1	1	±0.5%	±0.5%	∞
u9	Integration Time	±1.9%	Rectangular	$\sqrt{3}$	1	1	±1.1%	±1.1%	∞
u10	RF Ambient Conditions	±3.0%	Rectangular	$\sqrt{3}$	1	1	±1.7%	±1.7%	∞
u11	RF Ambient Reflections	±3.0%	Rectangular	$\sqrt{3}$	1	1	±1.7%	±1.7%	∞
u12	Probe Positioner Mechanical Tolerance	±0.4%	Rectangular	$\sqrt{3}$	1	1	±0.2%	±0.2%	∞
u13	Probe Positioning with respect to Phantom Shell	±2.9%	Rectangular	$\sqrt{3}$	1	1	±1.7%	±1.7%	∞
u14	Extrapolation, interpolation and integration Algorithms for Max. SAR Evaluation	±1.0%	Rectangular	$\sqrt{3}$	1	1	±0.6%	±0.6%	∞
Test sample Related									
u15	Test sample Positioning	±3.6%	Normal	1	1	1	±3.6%	±3.6%	89
u16	Device Holder Uncertainty	±2.7%	Normal	1	1	1	±2.7%	±2.7%	5
u17	Output Power Variation - SAR drift measurement	±5.0%	Rectangular	$\sqrt{3}$	1	1	±2.9%	±2.9%	∞
Phantom and Tissue Parameters									
u18	Phantom Uncertainty (shape and thickness tolerances)	±4.0%	Rectangular	$\sqrt{3}$	1	1	±2.3%	±2.3%	∞
u19	Liquid Conductivity - deviation from target values	±5.0%	Rectangular	$\sqrt{3}$	0.64	0.43	±1.8%	±1.2%	∞
u20	Liquid Conductivity - measurement uncertainty	±2.5%	Normal	1	0.64	0.43	±1.6%	±1.08%	69
u21	Liquid Permittivity - deviation from target values	±5.0%	Rectangular	$\sqrt{3}$	0.6	0.49	±1.7%	±1.4%	∞
u22	Liquid Permittivity - measurement uncertainty	±2.5%	Normal	1	0.6	0.49	±1.5%	±1.23%	69
Combined standard uncertainty			RSS				±10.88%	±10.66%	313
Expanded uncertainty (95% CONFIDENCE LEVEL)			k=2				±21.76%	±21.31%	

Table 5. Uncertainty Budget for frequency range 300MHz to 3GHz

©2015 A Test Lab Techno Corp.

Item	Uncertainty Component	Uncertainty Value	Prob. Dist	Div.	c_i (1g)	c_i (10g)	Std. Unc. （1-g）	Std. Unc. （10-g）	v_i or V_{eff}
Measurement System									
u1	Probe Calibration (k=1)	±6.5%	Normal	1	1	1	±6.5%	±6.5%	∞
u2	Axial Isotropy	±4.7%	Rectangular	$\sqrt{3}$	0.7	0.7	±1.9%	±1.9%	∞
u3	Hemispherical Isotropy	±9.6%	Rectangular	$\sqrt{3}$	0.7	0.7	±3.9%	±3.9%	
u4	Boundary Effect	±2.0%	Rectangular	$\sqrt{3}$	1	1	±1.2%	±1.2%	∞
u5	Linearity	±4.7%	Rectangular	$\sqrt{3}$	1	1	±2.7%	±2.7%	∞
u6	System Detection Limit	±1.0%	Rectangular	$\sqrt{3}$	1	1	±0.6%	±0.6%	∞
u7	Readout Electronics	±0.0%	Normal	1	1	1	±0.0%	±0.0%	∞
u8	Response Time	±0.8%	Rectangular	$\sqrt{3}$	1	1	±0.5%	±0.5%	∞
u9	Integration Time	±2.8%	Rectangular	$\sqrt{3}$	1	1	±2.8%	±2.8%	∞
u10	RF Ambient Conditions	±3.0%	Rectangular	$\sqrt{3}$	1	1	±1.7%	±1.7%	∞
u11	RF Ambient Reflections	±3.0%	Rectangular	$\sqrt{3}$	1	1	±1.7%	±1.7%	∞
u12	Probe Positioner Mechanical Tolerance	±0.7%	Rectangular	$\sqrt{3}$	1	1	±0.7%	±0.7%	∞
u13	Probe Positioning with respect to Phantom Shell	±9.9%	Rectangular	$\sqrt{3}$	1	1	±5.7%	±5.7%	∞
u14	Extrapolation, interpolation and integration Algorithms for Max. SAR Evaluation	±3.0%	Rectangular	$\sqrt{3}$	1	1	±1.7%	±1.7%	∞
Test sample Related									
u15	Test sample Positioning	±3.6%	Normal	1	1	1	±3.6%	±3.6%	89
u16	Device Holder Uncertainty	±2.7%	Normal	1	1	1	±2.7%	±2.7%	5
u17	Output Power Variation - SAR drift measurement	±5.0%	Rectangular	$\sqrt{3}$	1	1	±2.9%	±2.9%	∞
Phantom and Tissue Parameters									
u18	Phantom Uncertainty (shape and thickness tolerances)	±4.0%	Rectangular	$\sqrt{3}$	1	1	±2.3%	±2.3%	∞
u19	Liquid Conductivity - deviation from target values	±5.0%	Rectangular	$\sqrt{3}$	0.64	0.43	±1.8%	±1.2%	∞
u20	Liquid Conductivity - measurement uncertainty	±2.5%	Normal	1	0.64	0.43	±1.6%	±1.08%	69
u21	Liquid Permittivity - deviation from target values	±5.0%	Rectangular	$\sqrt{3}$	0.6	0.49	±1.7%	±1.4%	∞
u22	Liquid Permittivity - measurement uncertainty	±2.5%	Normal	1	0.6	0.49	±1.5%	±1.23%	69
Combined standard uncertainty			RSS				±12.84%	±12.65%	313
Expanded uncertainty (95% CONFIDENCE LEVEL)			k=2				±25.68%	±25.29%	

Table 6. Uncertainty Budget for Frequency Ragne 3GHz to 6GHz

©2015 A Test Lab Techno Corp.

10. Measurement Procedure

The measurement procedures are as follows:

1. For WLAN function, engineering testing software installed on Notebook can provide continuous transmitting signal.
2. Measure output power through RF cable and power meter
3. Set scan area, grid size and other setting on the DASY software
4. Find out the largest SAR result on these testing positions of each band
5. Measure SAR results for other channels in worst SAR testing position if the SAR of highest power channel is larger than 0.8 W/kg

According to the test standard, the recommended procedure for assessing the peak spatial-average SAR value consists of the following steps:

1. Power reference measurement
2. Area scan
3. Zoom scan
4. Power drift measurement

10.1 Spatial Peak SAR Evaluation

The procedure for spatial peak SAR evaluation has been implemented according to the test standard. It can be conducted for 1g and 10g, as well as for user-specific masses. The DASY software includes all numerical procedures necessary to evaluate the spatial peak SAR value.
The base for the evaluation is a "cube" measurement. The measured volume must include the 1g and 10g cubes with the highest averaged SAR values. For that purpose, the center of the measured volume is aligned to the interpolated peak SAR value of a previously performed area scan.
The entire evaluation of the spatial peak values is performed within the post-processing engine (SEMCAD). The system always gives the maximum values for the 1g and 10g cubes. The algorithm to find the cube with highest averaged SAR is divided into the following stages

1. Extraction of the measured data (grid and values) from the Zoom Scan
2. Calculation of the SAR value at every measurement point based on all stored data (A/D values and measurement parameters)
3. Generation of a high-resolution mesh within the measured volume
4. Interpolation of all measured values form the measurement grid to the high-resolution grid
5. Extrapolation of the entire 3-D field distribution to the phantom surface over the distance from sensor to surface
6. Calculation of the averaged SAR within masses of 1g and 10g

©2015 A Test Lab Techno Corp.

10.2 Area & Zoom Scan Procedures

First Area Scan is used to locate the approximate location(s) of the local peak SAR value(s). The measurement grid within an Area Scan is defined by the grid extent, grid step size and grid offset. Next, in order to determine the EM field distribution in a three-dimensional spatial extension, Zoom Scan is required. The Zoom Scan measures points and step size follow as below. The Zoom Scan is performed around the highest E-field value to determine the averaged SAR-distribution over 10 g.

Grid Type	Frequency		Step size (mm)			X*Y*Z (Point)	Cube size			Step size		
			X	Y	Z		X	Y	Z	X	Y	Z
uniform grid	≦ 3GHz	≦2GHz	≤ 8	≤ 8	≤ 5	5*5*7	32	32	30	8	8	5
		2G - 3G	≤ 5	≤ 5	≤ 5	7*7*7	30	30	30	5	5	5
	3 - 6GHz	3 - 4GHz	≤ 5	≤ 5	≤ 4	7*7*8	30	30	28	5	5	4
		4 - 5GHz	≤ 4	≤ 4	≤ 3	8*8*10	28	28	27	4	4	3
		5 - 6GHz	≤ 4	≤ 4	≤ 2	8*8*12	28	28	22	4	4	2

(Our measure settings are refer KDB Publication 865664 D01v01r04)

10.3 Volume Scan Procedures

The volume scan is used for assess overlapping SAR distributions for antennas transmitting in different frequency bands. It is equivalent to an oversized zoom scan used in standalone measurements. The measurement volume will be used to enclose all the simultaneous transmitting antennas. For antennas transmitting simultaneously in different frequency bands, the volume scan is measured separately in each frequency band. In order to sum correctly to compute the 1g aggregate SAR, the DUT remain in the same test position for all measurements and all volume scan use the same spatial resolution and grid spacing. When all volume scan were completed, the software, SEMCAD postprocessor can combine and subsequently superpose these measurement data to calculating the multiband SAR.

10.4 SAR Averaged Methods

In DASY, the interpolation and extrapolation are both based on the modified Quadratic Shepard's method. The interpolation scheme combines a least-square fitted function method and a weighted average method which are the two basic types of computational interpolation and approximation. Extrapolation routines are used to obtain SAR values between the lowest measurement points and the inner phantom surface. The extrapolation distance is determined by the surface detection distance and the probe sensor offset. The uncertainty increases with the extrapolation distance. To keep the uncertainty within 1% for the 1 g and 10 g cubes, the extrapolation distance should not be larger than 5 mm.

10.5 Power Drift Monitoring

All SAR testing is under the DUT install full charged battery and transmit maximum output power. In DASY measurement software, the power reference measurement and power drift measurement procedures are used for monitoring the power drift of DUT during SAR test. Both these procedures measure the field at a specified reference position before and after the SAR testing. The software will calculate the field difference in dB. If the power drift more than 5%, the SAR will be retested.

©2015 A Test Lab Techno Corp.

11. SAR Test Results Summary

11.1 Head Measurement SAR

Evaluated head SAR is not available.

11.2 Body Measurement SAR

Index.	Position	Band	Ch.	Data Rate or Sub-Test	Side to Phantom	Spacing (mm)	SAR $_{1g}$ (W/Kg)	Power Drift	Burst Avg Power	Max tune-up	Reported SAR $_{1g\backslash}$ (W/Kg)
#2	Flat	IEEE 802.11b	6	1M	2	0	1.080	0.01	17.58	18	1.190
#1	Flat		11	1M	2	0	1.010	-0.07	17.75	18	1.070
#6	Flat		11	1M	3	0	0.159	0.05	17.75	18	0.168
#7	Flat		11	1M	5	0	0.116	-0.01	17.75	18	0.123
#3	Flat	IEEE 802.11g	11	6M	2	0	0.346	0.00	12.43	13	0.395
#9	Flat		11	6M	3	0	0.051	0.14	12.43	13	0.058
#8	Flat		11	6M	5	0	0.050	0.09	12.43	13	0.057
#4	Flat	IEEE 802.11n (2.4GHz) 20MHz	6	6.5M	2	0	0.298	0.00	11.42	12	0.341
#10	Flat		6	6.5M	3	0	0.044	0.06	11.42	12	0.050
#5	Flat	IEEE 802.11n (2.4GHz) 40MHz	9	13.5M	2	0	0.342	-0.07	10.71	11	0.366

Note:
1. When the reported SAR of the highest measured maximum output power channel is > 0.8 W/kg, SAR is required using the next highest measured output power channel for 802.11b DSSS.
2. SAR for the initial test configuration is measured using the highest maximum output power channel
3. The EUT has exercised a maximum transmission duty factor of 100% during the SAR tested.

©2015 A Test Lab Techno Corp.

11.3 SAR Measurement Variability

Detailed evaluations please refer KDB 865664 on "SAR test reduction according to KDB" section.

Index.	Position	Band	Ch.	Data Rate or Sub-Test	Side to Phantom	Spacing (mm)	SAR $_{1g}$ (W/Kg)	Power Drift	Burst Avg Power	Max tune-up	Reported SAR $_{1g}$ (W/Kg)	Repeated measure-ment Ratio
#11	Flat	IEEE 802.11b	6	1M	2	0	1.030	-0.02	17.58	18	1.135	1.05 < 1.2

Note:

1. The According KDB 447498 D01 V05r02 section 4.1.4, the “Reported” explanation as below: “When SAR or MPE is measured at or scaled to the maximum tune-up tolerance limit, the results are referred to as reported”.
2. If actual power less than tune-up power that Scaling SAR is required.
3. The formula of Reported SAR, that represent as below:
   Reported SAR = Original SAR * 10^[(Tune-up power - Actual power)/10
4. The original highest measured Reported SAR 1g is ≥ 0.80 W/kg, repeat that measurement once.
5. Perform a second repeated measurement the ratio of largest to smallest SAR for the original and first repeated measurements is < 1.2,the original or repeated measurement is ≥ 1.45 W/kg (~ 10% from the 1-g SAR limit).
6. The EUT has exercised a maximum transmission duty factor of 100% during the SAR tested.

©2015 A Test Lab Techno Corp.

11.4 Std. C95.1-1999 RF Exposure Limit

Human Exposure	Population Uncontrolled Exposure (W/kg) or (mW/g)	Occupational Controlled Exposure (W/kg) or (mW/g)
Spatial Peak SAR* (head)	1.60	8.00
Spatial Peak SAR** (Whole Body)	0.08	0.40
Spatial Peak SAR*** (Partial-Body)	1.60	8.00
Spatial Peak SAR**** (Hands / Feet / Ankle / Wrist)	4.00	20.00

Table 7. Safety Limits for Partial Body Exposure

Notes：

* The Spatial Peak value of the SAR averaged over any 1 gram of tissue.
(defined as a tissue volume in the shape of a cube) and over the appropriate averaging time.

** The Spatial Average value of the SAR averaged over the whole – body.

*** The Spatial Average value of the SAR averaged over the partial – body.

**** The Spatial Peak value of the SAR averaged over any 10 grams of tissue.
(defined as a tissue volume in the shape of a cube) and over the appropriate averaging time.

Population / Uncontrolled Environments：are defined as locations where there is the exposure of individuals who have no knowledge or control of their exposure.

Occupational / Controlled Environments：are defined as locations where there is exposure that may be incurred by persons who are aware of the potential for exposure, (i.e. as a result of employment or occupation).

©2015 A Test Lab Techno Corp.

12. Conclusion

The SAR test values found for the portable mobile phone **Fisher-Price Inc. Trade Name：Smart Toy Bear Model(s)：DNV31** is below the maximum recommended level of 1.6 W/kg (mW/g).

13. References

[1] Std. C95.1-1999, "*American National Standard safety levels with respect to human exposure to radio frequency electromagnetic fields, 300KHz to 100GHz",* New York.

[2] NCRP, National Council on Radiation Protection and Measurements, "Biological Effects and Exposure Criteria for Radio frequency Electromagnetic Fields", NCRP report NO. 86, 1986.

[3] T. Schmid, O. Egger, and N. Kuster, "Automatic E-field scanning system for dosimetric assessments", IEEE Transactions on Microwave Theory and Techniques, vol. 44, pp, 105-113, Jan. 1996.

[4] K. Pokovi ́c, T. Schmid, and N. Kuster, "Robust setup for precise calibration of E-field probes in tissue simulating liquids at mobile communications frequency", in ICECOM'97, Dubrovnik, October 15-17, 1997, pp.120-124.

[5] K. Pokovi ́c, T. Schmid, and N. Kuster, "E-field probe with improved isotropy in brain simulating liquids", in Proceedings of the ELMAR, Zadar, Croatia, 23-25 June, 1996, pp.172-175.

[6] N. Kuster, and Q. Balzano, "Energy absorption mechanism by biological bodies in the near field of dipole antennas above 300MHz", IEEE Transaction on Vehicular Technology, vol. 41, no. 1, Feb. 1992, pp. 17-23.

[7] Robert J. Renka, "Multivariate Interpolation Of Large Sets Of Scattered Data", University of North Texas ACM Transactions on Mathematical Software, vol. 14, no. 2, June 1988 , pp. 139-148.

[8] N. Kuster, R. Kastle, T. Schmid, Dosimetric evaluation of mobile communications equipment with known precision, IEEE Transaction on Communications, vol. E80-B, no. 5, May 1997, pp. 645-652.

[9] Std. C95.3-1991, "IEEE Recommended Practice for the Measurement of Potentially Hazardous Electromagnetic Fields – RF and Microwave, New York: IEEE, Aug. 1992.

[10] CENELEC CLC/SC111B, European Prestandard (prENV 50166-2), Human Exposure to Electromagnetic Fields High-frequency: 10KHz-300GHz, Jan. 1995.

[11] IEEE Std 1528™-2013 - IEEE Recommended Practice for Determining the Peak Spatial-Average Specific Absorption Rate (SAR) in the Human Head From Wireless Communications Devices: Measurement Techniques

©2015 A Test Lab Techno Corp.

Appendix A - System Performance Check

Test Laboratory: A Test Lab Techno Corp.
Date: 2015/8/13Time: PM 07:14:46

System Performance Check at 2450MHz_20150813_Body

DUT: Dipole 2450 MHz;Type: D2450V2;Serial: D2450V2 - SN:712

Communication System: UID 0, CW (0);Frequency: 2450 MHz;Duty Cycle: 1:1
Medium parameters used: f = 2450 MHz; σ = 1.962 S/m; ε_r = 51.178; ρ = 1000 kg/m^3
Phantom section: Flat Section
Measurement Standard: DASY5 (IEEE 1528-2013)
DASY Configuration:

- Area Scan setting - Find Secondary Maximum Within:2.0dB and with a peak SAR value greater than 0.5 W/Kg
- Probe: EX3DV4 - SN3847;ConvF(7.29, 7.29, 7.29); Calibrated: 2015/1/30;
- Sensor-Surface: 2mm (Mechanical Surface Detection)
- Electronics: DAE4 Sn541;Calibrated: 2015/2/3
- Phantom: ELI v5.0;Type: QDOVA002AA;Serial: TP:1133
- Measurement SW: DASY52, Version 52.8 (8);SEMCAD X Version 14.6.10 (7331)

System Performance Check at 2450MHz/Area Scan (61x61x1):
Interpolated grid: dx=1.500 mm, dy=1.500 mm
Maximum value of SAR (interpolated) = 19.9 W/kg

System Performance Check at 2450MHz/Zoom Scan (7x7x7)/Cube 0:
Measurement grid: dx=5mm, dy=5mm, dz=5mm
Reference Value = 103.9 V/m; Power Drift = -0.03 dB
Peak SAR (extrapolated) = 26.3 W/kg
SAR(1 g) = 13.5 W/kg; SAR(10 g) = 6.29 W/kg
Maximum value of SAR (measured) = 20.1 W/kg

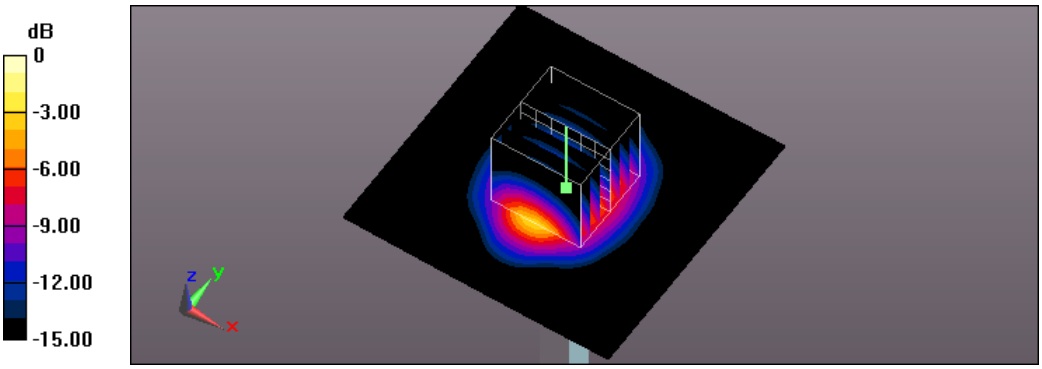

0 dB = 20.1 W/kg = 13.03 dBW/kg

Test Laboratory: A Test Lab Techno Corp.
Date: 2015/8/17Time: AM 09:49:47

System Performance Check at 2450MHz_20150817_Body

DUT: Dipole 2450 MHz;Type: D2450V2;Serial: D2450V2 - SN:712

Communication System: UID 0, CW (0);Frequency: 2450 MHz;Duty Cycle: 1:1
Medium parameters used: f = 2450 MHz; σ = 1.962 S/m; ε_r = 51.178; ρ = 1000 kg/m^3
Phantom section: Flat Section
Measurement Standard: DASY5 (IEEE 1528-2013)
DASY Configuration:

- Area Scan setting - Find Secondary Maximum Within:2.0dB and with a peak SAR value greater than 0.5 W/Kg
- Probe: EX3DV4 - SN3847;ConvF(7.29, 7.29, 7.29); Calibrated: 2015/1/30;
- Sensor-Surface: 2mm (Mechanical Surface Detection)
- Electronics: DAE4 Sn541;Calibrated: 2015/2/3
- Phantom: ELI v5.0;Type: QDOVA002AA;Serial: TP:1133
- Measurement SW: DASY52, Version 52.8 (8);SEMCAD X Version 14.6.10 (7331)

System Performance Check at 2450MHz/Area Scan (61x61x1):
Interpolated grid: dx=1.500 mm, dy=1.500 mm
Maximum value of SAR (interpolated) = 20.0 W/kg

System Performance Check at 2450MHz/Zoom Scan (7x7x7)/Cube 0:
Measurement grid: dx=5mm, dy=5mm, dz=5mm
Reference Value = 103.3 V/m; Power Drift = -0.06 dB
Peak SAR (extrapolated) = 25.7 W/kg
SAR(1 g) = 13.2 W/kg; SAR(10 g) = 6.17 W/kg
Maximum value of SAR (measured) = 19.9 W/kg

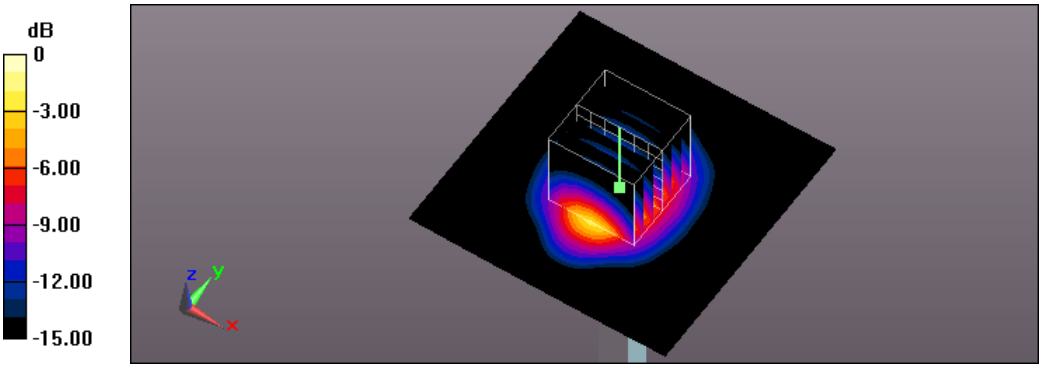

0 dB = 19.9 W/kg = 12.99 dBW/kg

Appendix B - SAR Measurement Data

Test Laboratory: A Test Lab Techno Corp.
Date: 2015/8/14Time: PM 02:58:38

2_802.11b CH6_1M_side 2_0mm

DUT: DNV31;Type: DNV31 Smart Toy Bear

Communication System: UID 0, IEEE 802.11b (0);Frequency: 2437 MHz;Duty Cycle: 1:1
Medium parameters used: f = 2437 MHz; σ = 1.944 S/m; ε_r = 51.158; ρ = 1000 kg/m^3
Phantom section: Flat Section
Measurement Standard: DASY5 (IEEE 1528-2013)
DASY Configuration:

- Area Scan setting - Find Secondary Maximum Within:2.0dB and with a peak SAR value greater than 0.5 W/Kg
- Probe: EX3DV4 - SN3847;ConvF(7.29, 7.29, 7.29); Calibrated: 2015/1/30;
- Sensor-Surface: 2mm (Mechanical Surface Detection)
- Electronics: DAE4 Sn541;Calibrated: 2015/2/3
- Phantom: ELI v5.0;Type: QDOVA002AA;Serial: TP:1133
- Measurement SW: DASY52, Version 52.8 (8);SEMCAD X Version 14.6.10 (7331)

Flat/Area Scan (91x101x1): Interpolated grid: dx=1.000 mm, dy=1.000 mm
Maximum value of SAR (interpolated) = 1.58 W/kg

Flat/Zoom Scan (7x7x7)/Cube 0: Measurement grid: dx=5mm, dy=5mm, dz=5mm
Reference Value = 28.83 V/m; Power Drift = 0.01 dB
Peak SAR (extrapolated) = 1.94 W/kg
SAR(1 g) = 1.08 W/kg; SAR(10 g) = 0.555 W/kg
Maximum value of SAR (measured) = 1.53 W/kg

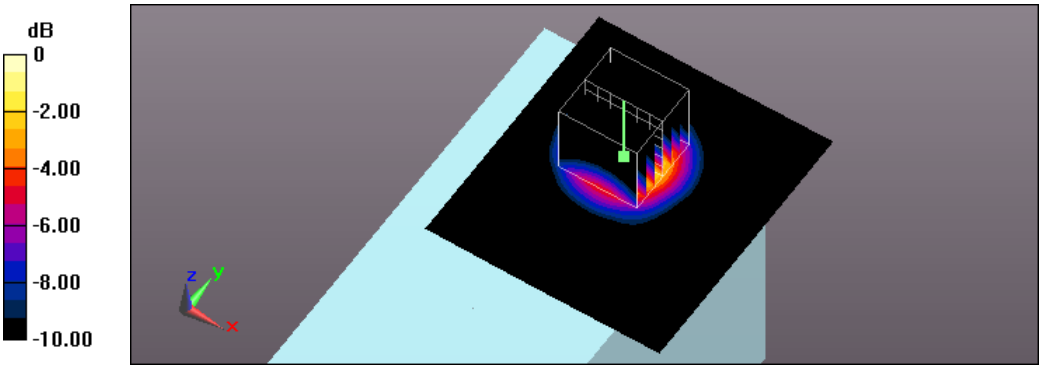

0 dB = 1.53 W/kg = 1.85 dBW/kg

Test Laboratory: A Test Lab Techno Corp.
Date: 2015/8/14Time: PM 02:26:30

1_802.11b CH11_1M_side 2_0mm

DUT: DNV31;Type: DNV31 Smart Toy Bear

Communication System: UID 0, IEEE 802.11b (0);Frequency: 2462 MHz;Duty Cycle: 1:1
Medium parameters used: f = 2462 MHz; σ = 1.978 S/m; ε_r = 51.167; ρ = 1000 kg/m^3
Phantom section: Flat Section
Measurement Standard: DASY5 (IEEE 1528-2013)
DASY Configuration:

- Area Scan setting - Find Secondary Maximum Within:2.0dB and with a peak SAR value greater than 0.5 W/Kg
- Probe: EX3DV4 - SN3847;ConvF(7.29, 7.29, 7.29); Calibrated: 2015/1/30;
- Sensor-Surface: 2mm (Mechanical Surface Detection)
- Electronics: DAE4 Sn541;Calibrated: 2015/2/3
- Phantom: ELI v5.0;Type: QDOVA002AA;Serial: TP:1133
- Measurement SW: DASY52, Version 52.8 (8);SEMCAD X Version 14.6.10 (7331)

Flat/Area Scan (71x101x1): Interpolated grid: dx=1.000 mm, dy=1.000 mm
Maximum value of SAR (interpolated) = 1.52 W/kg

Flat/Zoom Scan (7x7x7)/Cube 0: Measurement grid: dx=5mm, dy=5mm, dz=5mm
Reference Value = 27.89 V/m; Power Drift = -0.07 dB
Peak SAR (extrapolated) = 1.83 W/kg
SAR(1 g) = 1.01 W/kg; SAR(10 g) = 0.517 W/kg
Maximum value of SAR (measured) = 1.43 W/kg

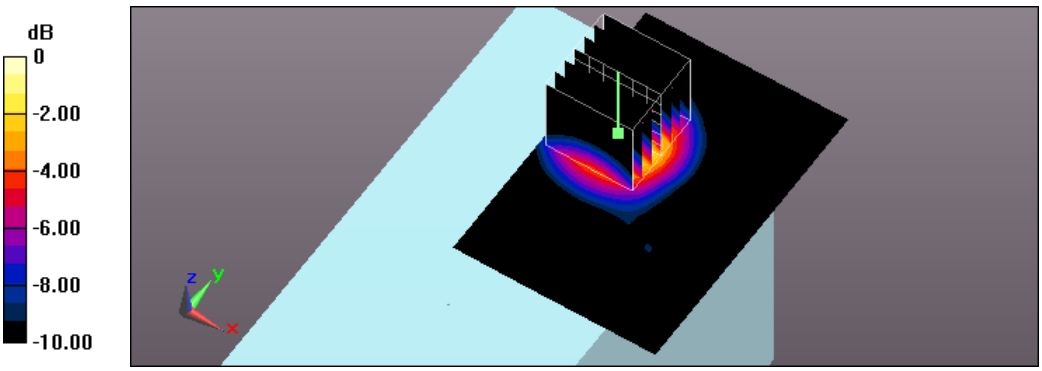

0 dB = 1.43 W/kg = 1.55 dBW/kg

Test Laboratory: A Test Lab Techno Corp.
Date: 2015/8/17Time: AM 11:05:24

6_802.11b CH11_1M_side 3_0mm

DUT: DNV31;Type: DNV31 Smart Toy Bear

Communication System: UID 0, IEEE 802.11b (0);Frequency: 2462 MHz;Duty Cycle: 1:1
Medium parameters used: f = 2462 MHz; σ = 1.978 S/m; ε_r = 51.167; ρ = 1000 kg/m^3
Phantom section: Flat Section
Measurement Standard: DASY5 (IEEE 1528-2013)
DASY Configuration:

- Area Scan setting - Find Secondary Maximum Within:2.0dB and with a peak SAR value greater than 0.5 W/Kg
- Probe: EX3DV4 - SN3847;ConvF(7.29, 7.29, 7.29); Calibrated: 2015/1/30;
- Sensor-Surface: 2mm (Mechanical Surface Detection)
- Electronics: DAE4 Sn541;Calibrated: 2015/2/3
- Phantom: ELI v5.0;Type: QDOVA002AA;Serial: TP:1133
- Measurement SW: DASY52, Version 52.8 (8);SEMCAD X Version 14.6.10 (7331)

Flat/Area Scan (91x101x1): Interpolated grid: dx=1.000 mm, dy=1.000 mm
Maximum value of SAR (interpolated) = 0.218 W/kg

Flat/Zoom Scan (7x7x7)/Cube 0: Measurement grid: dx=5mm, dy=5mm, dz=5mm
Reference Value = 10.62 V/m; Power Drift = 0.05 dB
Peak SAR (extrapolated) = 0.278 W/kg
SAR(1 g) = 0.159 W/kg; SAR(10 g) = 0.089 W/kg
Maximum value of SAR (measured) = 0.220 W/kg

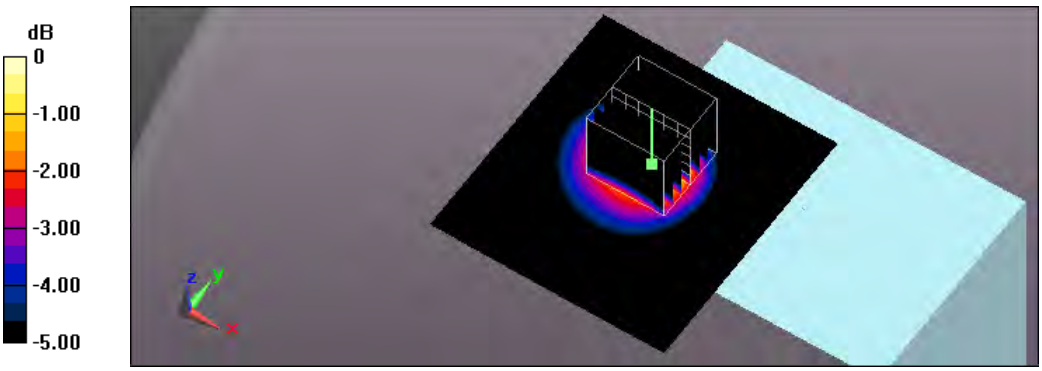

0 dB = 0.220 W/kg = -6.58 dBW/kg

Test Laboratory: A Test Lab Techno Corp.
Date: 2015/8/17Time: AM 11:46:22

7_802.11b CH11_1M_side 5_0mm

DUT: DNV31;Type: DNV31 Smart Toy Bear

Communication System: UID 0, IEEE 802.11b (0);Frequency: 2462 MHz;Duty Cycle: 1:1
Medium parameters used: f = 2462 MHz; σ = 1.978 S/m; ε_r = 51.167; ρ = 1000 kg/m^3
Phantom section: Flat Section
Measurement Standard: DASY5 (IEEE 1528-2013)
DASY Configuration:

- Area Scan setting - Find Secondary Maximum Within:2.0dB and with a peak SAR value greater than 0.5 W/Kg
- Probe: EX3DV4 - SN3847;ConvF(7.29, 7.29, 7.29); Calibrated: 2015/1/30;
- Sensor-Surface: 2mm (Mechanical Surface Detection)
- Electronics: DAE4 Sn541;Calibrated: 2015/2/3
- Phantom: ELI v5.0;Type: QDOVA002AA;Serial: TP:1133
- Measurement SW: DASY52, Version 52.8 (8);SEMCAD X Version 14.6.10 (7331)

Flat/Area Scan (91x101x1): Interpolated grid: dx=1.000 mm, dy=1.000 mm
Maximum value of SAR (interpolated) = 0.169 W/kg

Flat/Zoom Scan (7x7x7)/Cube 0: Measurement grid: dx=5mm, dy=5mm, dz=5mm
Reference Value = 9.128 V/m; Power Drift = -0.01 dB
Peak SAR (extrapolated) = 0.216 W/kg
SAR(1 g) = 0.116 W/kg; SAR(10 g) = 0.059 W/kg
Maximum value of SAR (measured) = 0.165 W/kg

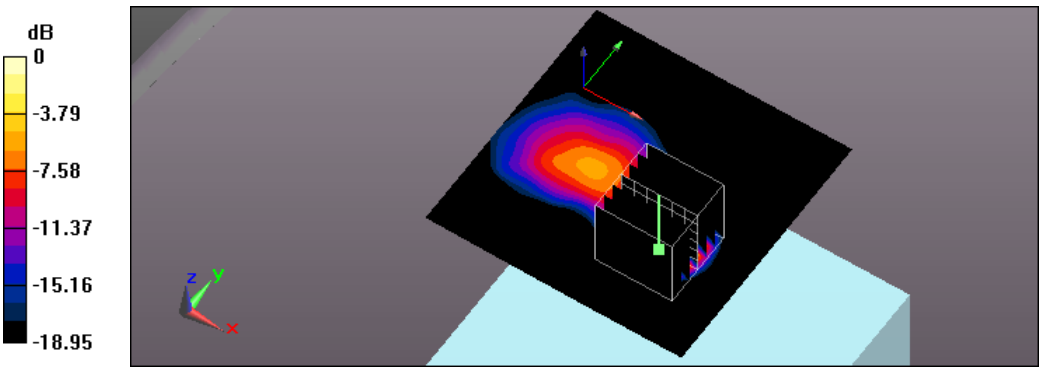

0 dB = 0.165 W/kg = -7.83 dBW/kg

Test Laboratory: A Test Lab Techno Corp.
Date: 2015/8/14Time: PM 03:26:39

3_802.11g CH11_6M_side 2_0mm

DUT: DNV31;Type: DNV31 Smart Toy Bear

Communication System: UID 0, IEEE 802.11g (0);Frequency: 2462 MHz;Duty Cycle: 1:1
Medium parameters used: f = 2462 MHz; σ = 1.978 S/m; ε_r = 51.167; ρ = 1000 kg/m^3
Phantom section: Flat Section
Measurement Standard: DASY5 (IEEE 1528-2013)
DASY Configuration:

- Area Scan setting - Find Secondary Maximum Within:2.0dB and with a peak SAR value greater than 0.5 W/Kg
- Probe: EX3DV4 - SN3847;ConvF(7.29, 7.29, 7.29); Calibrated: 2015/1/30;
- Sensor-Surface: 2mm (Mechanical Surface Detection)
- Electronics: DAE4 Sn541;Calibrated: 2015/2/3
- Phantom: ELI v5.0;Type: QDOVA002AA;Serial: TP:1133
- Measurement SW: DASY52, Version 52.8 (8);SEMCAD X Version 14.6.10 (7331)

Flat/Area Scan (91x101x1): Interpolated grid: dx=1.000 mm, dy=1.000 mm
Maximum value of SAR (interpolated) = 0.496 W/kg

Flat/Zoom Scan (7x7x7)/Cube 0: Measurement grid: dx=5mm, dy=5mm, dz=5mm
Reference Value = 16.30 V/m; Power Drift = 0.00 dB
Peak SAR (extrapolated) = 0.628 W/kg
SAR(1 g) = 0.346 W/kg; SAR(10 g) = 0.177 W/kg
Maximum value of SAR (measured) = 0.490 W/kg

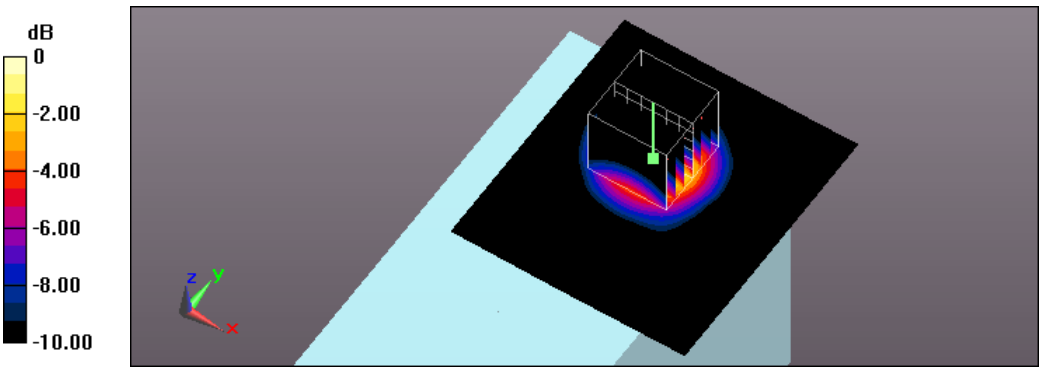

0 dB = 0.490 W/kg = -3.10 dBW/kg

Test Laboratory: A Test Lab Techno Corp.
Date: 2015/8/17Time: PM 04:19:02

9_802.11g CH11_6M_side 3_0mm

DUT: DNV31;Type: DNV31 Smart Toy Bear

Communication System: UID 0, IEEE 802.11g (0);Frequency: 2462 MHz;Duty Cycle: 1:1
Medium parameters used: f = 2462 MHz; σ = 1.978 S/m; ε_r = 51.167; ρ = 1000 kg/m^3
Phantom section: Flat Section
Measurement Standard: DASY5 (IEEE 1528-2013)
DASY Configuration:

- Area Scan setting - Find Secondary Maximum Within:2.0dB and with a peak SAR value greater than 0.5 W/Kg
- Probe: EX3DV4 - SN3847;ConvF(7.29, 7.29, 7.29); Calibrated: 2015/1/30;
- Sensor-Surface: 2mm (Mechanical Surface Detection)
- Electronics: DAE4 Sn541;Calibrated: 2015/2/3
- Phantom: ELI v5.0;Type: QDOVA002AA;Serial: TP:1133
- Measurement SW: DASY52, Version 52.8 (8);SEMCAD X Version 14.6.10 (7331)

Flat/Area Scan (91x101x1): Interpolated grid: dx=1.000 mm, dy=1.000 mm
Maximum value of SAR (interpolated) = 0.0723 W/kg

Flat/Zoom Scan (7x7x7)/Cube 0: Measurement grid: dx=5mm, dy=5mm, dz=5mm
Reference Value = 6.055 V/m; Power Drift = 0.14 dB
Peak SAR (extrapolated) = 0.0890 W/kg
SAR(1 g) = 0.051 W/kg; SAR(10 g) = 0.029 W/kg
Maximum value of SAR (measured) = 0.0714 W/kg

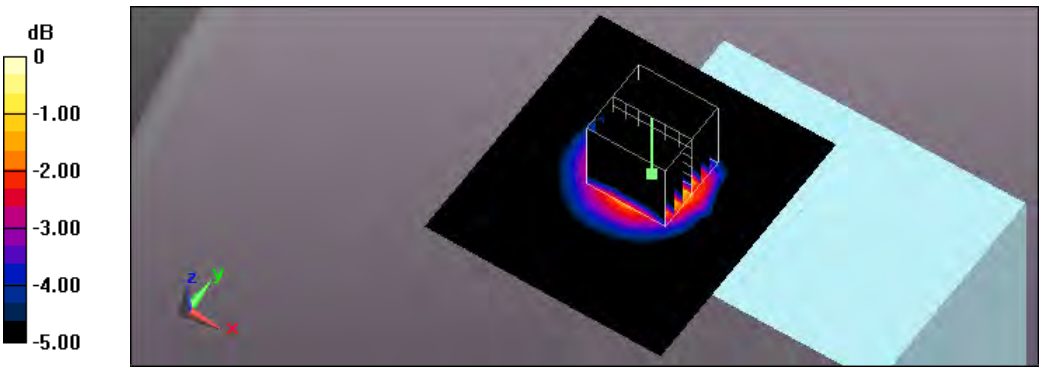

0 dB = 0.0714 W/kg = -11.46 dBW/kg

Test Laboratory: A Test Lab Techno Corp.
Date: 2015/8/17Time: PM 01:09:47

8_802.11g CH11_6M_side 5_0mm

DUT: DNV31;Type: DNV31 Smart Toy Bear

Communication System: UID 0, IEEE 802.11g (0);Frequency: 2462 MHz;Duty Cycle: 1:1
Medium parameters used: f = 2462 MHz; σ = 1.978 S/m; ε_r = 51.167; ρ = 1000 kg/m^3
Phantom section: Flat Section
Measurement Standard: DASY5 (IEEE 1528-2013)
DASY Configuration:

- Area Scan setting - Find Secondary Maximum Within:2.0dB and with a peak SAR value greater than 0.5 W/Kg
- Probe: EX3DV4 - SN3847;ConvF(7.29, 7.29, 7.29); Calibrated: 2015/1/30;
- Sensor-Surface: 2mm (Mechanical Surface Detection)
- Electronics: DAE4 Sn541;Calibrated: 2015/2/3
- Phantom: ELI v5.0;Type: QDOVA002AA;Serial: TP:1133
- Measurement SW: DASY52, Version 52.8 (8);SEMCAD X Version 14.6.10 (7331)

Flat/Area Scan (101x101x1): Interpolated grid: dx=1.000 mm, dy=1.000 mm
Maximum value of SAR (interpolated) = 0.0717 W/kg

Flat/Zoom Scan (7x7x7)/Cube 0: Measurement grid: dx=5mm, dy=5mm, dz=5mm
Reference Value = 6.044 V/m; Power Drift = 0.09 dB
Peak SAR (extrapolated) = 0.0930 W/kg
SAR(1 g) = 0.050 W/kg; SAR(10 g) = 0.026 W/kg
Maximum value of SAR (measured) = 0.0703 W/kg

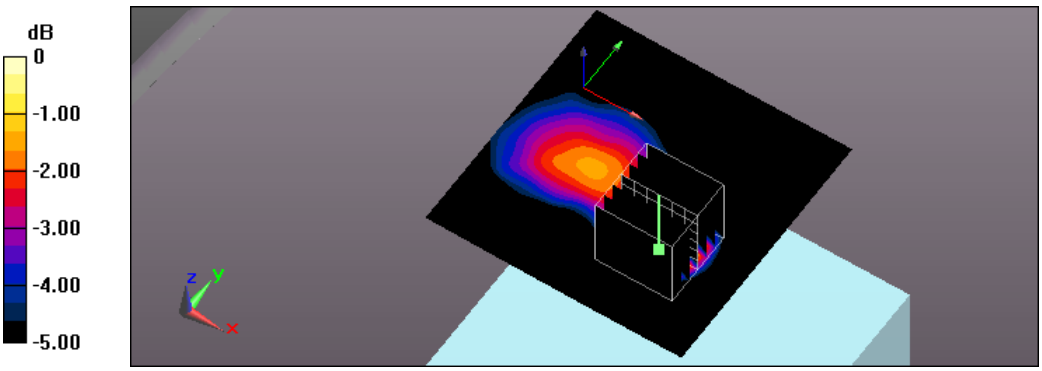

0 dB = 0.0703 W/kg = -11.53 dBW/kg

Test Laboratory: A Test Lab Techno Corp.
Date: 2015/8/14Time: PM 04:17:43

4_802.11n 20 CH6_6.5M_side 2_0mm

DUT: DNV31;Type: DNV31 Smart Toy Bear

Communication System: UID 0, IEEE 802.11n(2.4GHz) (0);Frequency: 2437 MHz;Duty Cycle: 1:1
Medium parameters used: f = 2437 MHz; σ = 1.944 S/m; ε_r = 51.158; ρ = 1000 kg/m^3
Phantom section: Flat Section
Measurement Standard: DASY5 (IEEE 1528-2013)
DASY Configuration:

- Area Scan setting - Find Secondary Maximum Within:2.0dB and with a peak SAR value greater than 0.5 W/Kg
- Probe: EX3DV4 - SN3847;ConvF(7.29, 7.29, 7.29); Calibrated: 2015/1/30;
- Sensor-Surface: 2mm (Mechanical Surface Detection)
- Electronics: DAE4 Sn541;Calibrated: 2015/2/3
- Phantom: ELI v5.0;Type: QDOVA002AA;Serial: TP:1133
- Measurement SW: DASY52, Version 52.8 (8);SEMCAD X Version 14.6.10 (7331)

Flat/Area Scan (91x101x1): Interpolated grid: dx=1.000 mm, dy=1.000 mm
Maximum value of SAR (interpolated) = 0.428 W/kg

Flat/Zoom Scan (7x7x7)/Cube 0: Measurement grid: dx=5mm, dy=5mm, dz=5mm
Reference Value = 15.18 V/m; Power Drift = -0.00 dB
Peak SAR (extrapolated) = 0.535 W/kg
SAR(1 g) = 0.298 W/kg; SAR(10 g) = 0.153 W/kg
Maximum value of SAR (measured) = 0.419 W/kg

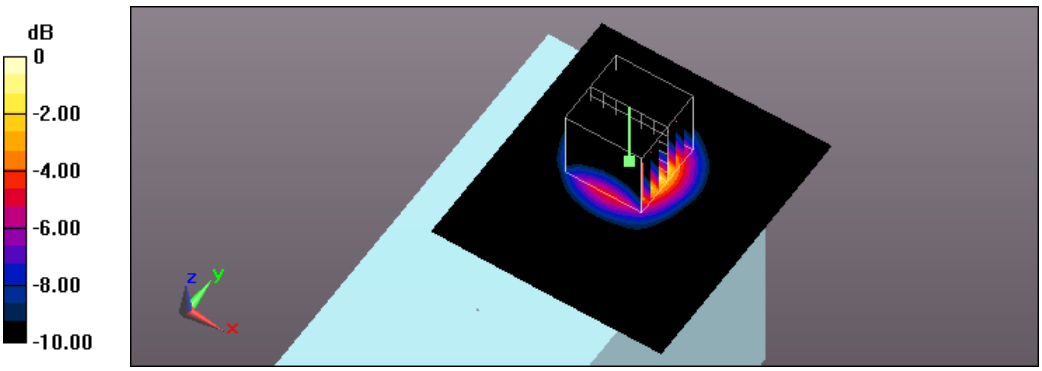

0 dB = 0.419 W/kg = -3.78 dBW/kg

Test Laboratory: A Test Lab Techno Corp.
Date: 2015/8/18Time: AM 09:09:55

10_802.11n 20 CH6_6.5M_side 3_0mm

DUT: DNV31;Type: DNV31 Smart Toy Bear

Communication System: UID 0, IEEE 802.11n(2.4GHz) (0);Frequency: 2437 MHz;Duty Cycle: 1:1
Medium parameters used: f = 2437 MHz; σ = 1.944 S/m; ε_r = 51.158; ρ = 1000 kg/m^3
Phantom section: Flat Section
Measurement Standard: DASY5 (IEEE 1528-2013)
DASY Configuration:

- Area Scan setting - Find Secondary Maximum Within:2.0dB and with a peak SAR value greater than 0.5 W/Kg
- Probe: EX3DV4 - SN3847;ConvF(7.29, 7.29, 7.29); Calibrated: 2015/1/30;
- Sensor-Surface: 2mm (Mechanical Surface Detection)
- Electronics: DAE4 Sn541;Calibrated: 2015/2/3
- Phantom: ELI v5.0;Type: QDOVA002AA;Serial: TP:1133
- Measurement SW: DASY52, Version 52.8 (8);SEMCAD X Version 14.6.10 (7331)

Flat/Area Scan (91x101x1): Interpolated grid: dx=1.000 mm, dy=1.000 mm
Maximum value of SAR (interpolated) = 0.0593 W/kg

Flat/Zoom Scan (7x7x7)/Cube 0: Measurement grid: dx=5mm, dy=5mm, dz=5mm
Reference Value = 5.600 V/m; Power Drift = 0.06 dB
Peak SAR (extrapolated) = 0.122 W/kg
SAR(1 g) = 0.044 W/kg; SAR(10 g) = 0.023 W/kg
Maximum value of SAR (measured) = 0.0610 W/kg

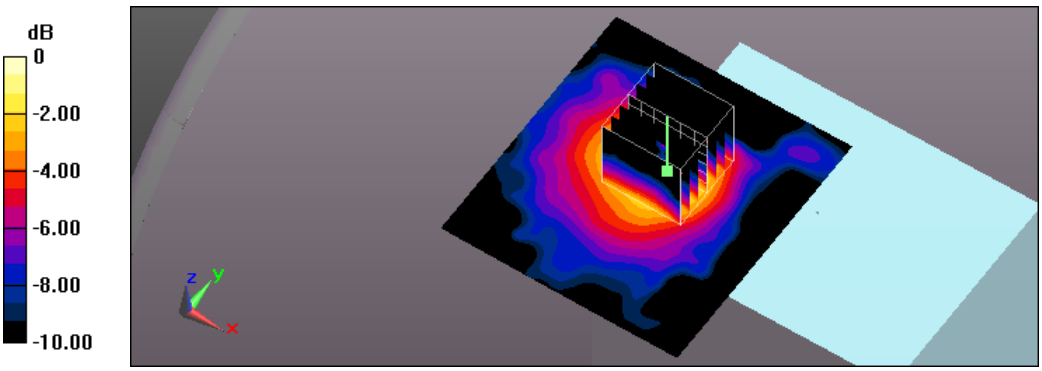

0 dB = 0.0610 W/kg = -12.15 dBW/kg

Test Laboratory: A Test Lab Techno Corp.
Date: 2015/8/17Time: AM 10:26:44

5_802.11n 40 CH9_13.5M_side 2_0mm

DUT: DNV31;Type: DNV31 Smart Toy Bear

Communication System: UID 0, IEEE 802.11n(2.4GHz) (0);Frequency: 2452 MHz;Duty Cycle: 1:1
Medium parameters used: f = 2452 MHz; σ = 1.965 S/m; ε_r = 51.175; ρ = 1000 kg/m^3
Phantom section: Flat Section
Measurement Standard: DASY5 (IEEE 1528-2013)
DASY Configuration:

- Area Scan setting - Find Secondary Maximum Within:2.0dB and with a peak SAR value greater than 0.5 W/Kg
- Probe: EX3DV4 - SN3847;ConvF(7.29, 7.29, 7.29); Calibrated: 2015/1/30;
- Sensor-Surface: 2mm (Mechanical Surface Detection)
- Electronics: DAE4 Sn541;Calibrated: 2015/2/3
- Phantom: ELI v5.0;Type: QDOVA002AA;Serial: TP:1133
- Measurement SW: DASY52, Version 52.8 (8);SEMCAD X Version 14.6.10 (7331)

Flat/Area Scan (91x101x1): Interpolated grid: dx=1.000 mm, dy=1.000 mm
Maximum value of SAR (interpolated) = 0.520 W/kg

Flat/Zoom Scan (7x7x7)/Cube 0: Measurement grid: dx=5mm, dy=5mm, dz=5mm
Reference Value = 16.01 V/m; Power Drift = -0.07 dB
Peak SAR (extrapolated) = 0.645 W/kg
SAR(1 g) = 0.342 W/kg; SAR(10 g) = 0.168 W/kg
Maximum value of SAR (measured) = 0.493 W/kg

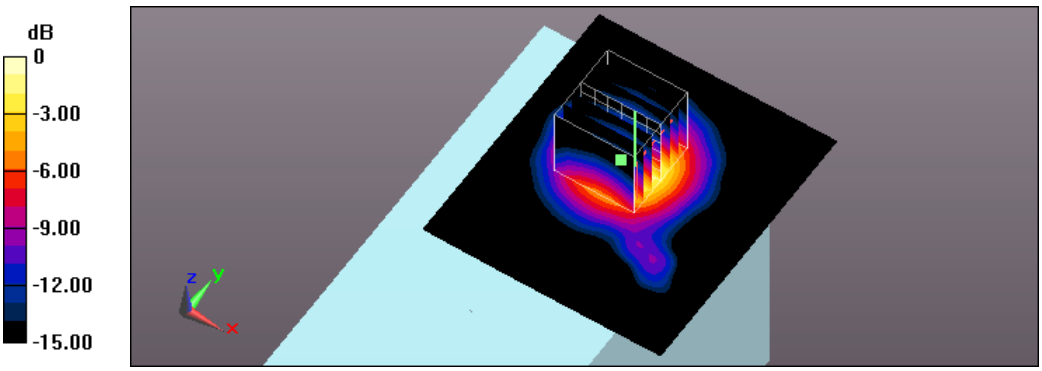

0 dB = 0.493 W/kg = -3.07 dBW/kg

Test Laboratory: A Test Lab Techno Corp.
Date: 2015/8/14Time: PM 05:37:06

11_802.11b CH6_1M_side 2_original #2_measurement once_0mm

DUT: DNV31;Type: DNV31 Smart Toy Bear

Communication System: UID 0, IEEE 802.11b (0);Frequency: 2437 MHz;Duty Cycle: 1:1
Medium parameters used: f = 2437 MHz; σ = 1.944 S/m; ε_r = 51.158; ρ = 1000 kg/m^3
Phantom section: Flat Section
Measurement Standard: DASY5 (IEEE 1528-2013)
DASY Configuration:

- Area Scan setting - Find Secondary Maximum Within:2.0dB and with a peak SAR value greater than 0.5 W/Kg
- Probe: EX3DV4 - SN3847;ConvF(7.29, 7.29, 7.29); Calibrated: 2015/1/30;
- Sensor-Surface: 2mm (Mechanical Surface Detection)
- Electronics: DAE4 Sn541;Calibrated: 2015/2/3
- Phantom: ELI v5.0;Type: QDOVA002AA;Serial: TP:1133
- Measurement SW: DASY52, Version 52.8 (8);SEMCAD X Version 14.6.10 (7331)

Flat/Area Scan (91x101x1): Interpolated grid: dx=1.000 mm, dy=1.000 mm
Maximum value of SAR (interpolated) = 1.46 W/kg

Flat/Zoom Scan (7x7x7)/Cube 0: Measurement grid: dx=5mm, dy=5mm, dz=5mm
Reference Value = 27.10 V/m; Power Drift = -0.02 dB
Peak SAR (extrapolated) = 1.86 W/kg
SAR(1 g) = 1.03 W/kg; SAR(10 g) = 0.534 W/kg
Maximum value of SAR (measured) = 1.47 W/kg

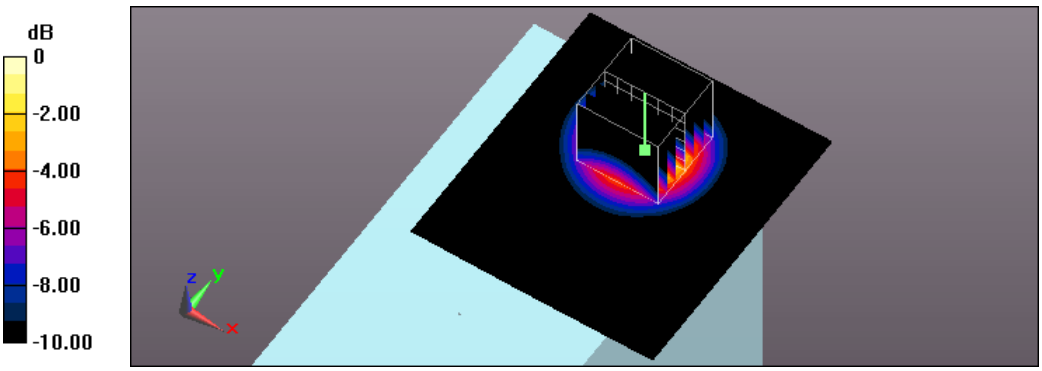

0 dB = 1.47 W/kg = 1.67 dBW/kg

Appendix C - Calibration

All of the instruments Calibration information are listed below.

- Dipole _ D2450V2 SN:712 Calibration No.D2450V2-712_Mar15
- Probe _ EX3DV4 SN:3847 Calibration No.EX3-3847_Jan15
- DAE _ DAE4 SN:541 Calibration No.DAE4-541_Feb15

©2015 A Test Lab Techno Corp.

In Collaboration with
s p e a g
CALIBRATION LABORATORY

Add: No.51 Xueyuan Road, Haidian District, Beijing, 100191, China
Tel: +86-10-62304633-2079 Fax: +86-10-62304633-2504
E-mail: cttl@chinattl.com Http://www.chinattl.cn

CALIBRATION No. L0570

Client ATL Certificate No: Z15-97042

CALIBRATION CERTIFICATE

Object	D2450V2 - SN: 712
Calibration Procedure(s)	FD-Z11-2-003-01 Calibration Procedures for dipole validation kits
Calibration date:	March 12, 2015

This calibration Certificate documents the traceability to national standards, which realize the physical units of measurements(SI). The measurements and the uncertainties with confidence probability are given on the following pages and are part of the certificate.

All calibrations have been conducted in the closed laboratory facility: environment temperature(22±3)℃ and humidity<70%.

Calibration Equipment used (M&TE critical for calibration)

Primary Standards	ID #	Cal Date(Calibrated by, Certificate No.)	Scheduled Calibration
Power Meter NRP2	101919	01-Jul-14 (CTTL, No.J14X02146)	Jun-15
Power sensor NRP-Z91	101547	01-Jul-14 (CTTL, No.J14X02146)	Jun-15
Reference Probe ES3DV3	SN 3142	01-Sep-14(CTTL-SPEAG,No.Z14-97079)	Aug-15
DAE4	SN 1331	20-Jan-15(CTTL-SPEAG, No. Z15-97011)	Jan-16
Secondary Standards	**ID #**	**Cal Date(Calibrated by, Certificate No.)**	**Scheduled Calibration**
Signal Generator E4438C	MY49071430	02-Feb-15 (CTTL, No.J15X00729)	Feb-16
Network Analyzer E5071C	MY46110673	03-Feb-15 (CTTL, No.J15X00728)	Feb-16

	Name	Function	Signature
Calibrated by:	Zhao Jing	SAR Test Engineer	
Reviewed by:	Qi Dianyuan	SAR Project Leader	
Approved by:	Lu Bingsong	Deputy Director of the laboratory	

Issued: March 12, 2015

This calibration certificate shall not be reproduced except in full without written approval of the laboratory.

Certificate No: Z15-97042 Page 1 of 8

In Collaboration with
s p e a g
CALIBRATION LABORATORY
Add: No.51 Xueyuan Road, Haidian District, Beijing, 100191, China
Tel: +86-10-62304633-2079 Fax: +86-10-62304633-2504
E-mail: cttl@chinattl.com Http://www.chinattl.cn

Glossary:

TSL	tissue simulating liquid
ConvF	sensitivity in TSL / NORMx,y,z
N/A	not applicable or not measured

Calibration is Performed According to the Following Standards:

a) IEEE Std 1528-2013, "IEEE Recommended Practice for Determining the Peak Spatial-Averaged Specific Absorption Rate (SAR) in the Human Head from Wireless Communications Devices: Measurement Techniques", June 2013

b) IEC 62209-1, "Procedure to measure the Specific Absorption Rate (SAR) For hand-held devices used in close proximity to the ear (frequency range of 300MHz to 3GHz)", February 2005

c) KDB865664, SAR Measurement Requirements for 100 MHz to 6 GHz

Additional Documentation:

d) DASY4/5 System Handbook

Methods Applied and Interpretation of Parameters:

- *Measurement Conditions:* Further details are available from the Validation Report at the end of the certificate. All figures stated in the certificate are valid at the frequency indicated.
- *Antenna Parameters with TSL:* The dipole is mounted with the spacer to position its feed point exactly below the center marking of the flat phantom section, with the arms oriented parallel to the body axis.
- *Feed Point Impedance and Return Loss:* These parameters are measured with the dipole positioned under the liquid filled phantom. The impedance stated is transformed from the measurement at the SMA connector to the feed point. The Return Loss ensures low reflected power. No uncertainty required.
- *Electrical Delay:* One-way delay between the SMA connector and the antenna feed point. No uncertainty required.
- *SAR measured:* SAR measured at the stated antenna input power.
- *SAR normalized:* SAR as measured, normalized to an input power of 1 W at the antenna connector.
- *SAR for nominal TSL parameters:* The measured TSL parameters are used to calculate the nominal SAR result.

The reported uncertainty of measurement is stated as the standard uncertainty of Measurement multiplied by the coverage factor k=2, which for a normal distribution Corresponds to a coverage probability of approximately 95%.

©2015 A Test Lab Techno Corp.

In Collaboration with
s p e a g
CALIBRATION LABORATORY
Add: No.51 Xueyuan Road, Haidian District, Beijing, 100191, China
Tel: +86-10-62304633-2079 Fax: +86-10-62304633-2504
E-mail: cttl@chinattl.com Http://www.chinattl.cn

Measurement Conditions

DASY system configuration, as far as not given on page 1.

DASY Version	DASY52	52.8.8.1222
Extrapolation	Advanced Extrapolation	
Phantom	Triple Flat Phantom 5.1C	
Distance Dipole Center - TSL	10 mm	with Spacer
Zoom Scan Resolution	dx, dy, dz = 5 mm	
Frequency	2450 MHz ± 1 MHz	

Head TSL parameters

The following parameters and calculations were applied.

	Temperature	Permittivity	Conductivity
Nominal Head TSL parameters	22.0 °C	39.2	1.80 mho/m
Measured Head TSL parameters	(22.0 ± 0.2) °C	39.5 ± 6 %	1.77 mho/m ± 6 %
Head TSL temperature change during test	<1.0 °C	----	----

SAR result with Head TSL

SAR averaged over 1 cm^3 (1 g) of Head TSL	Condition	
SAR measured	250 mW input power	13.7 mW / g
SAR for nominal Head TSL parameters	normalized to 1W	**55.3 mW /g ± 20.8 % (k=2)**
SAR averaged over 10 cm^3 (10 g) of Head TSL	Condition	
SAR measured	250 mW input power	6.33 mW / g
SAR for nominal Head TSL parameters	normalized to 1W	**25.5 mW /g ± 20.4 % (k=2)**

Body TSL parameters

The following parameters and calculations were applied.

	Temperature	Permittivity	Conductivity
Nominal Body TSL parameters	22.0 °C	52.7	1.95 mho/m
Measured Body TSL parameters	(22.0 ± 0.2) °C	51.8 ± 6 %	1.96 mho/m ± 6 %
Body TSL temperature change during test	<1.0 °C	----	----

SAR result with Body TSL

SAR averaged over 1 cm^3 (1 g) of Body TSL	Condition	
SAR measured	250 mW input power	13.3 mW / g
SAR for nominal Body TSL parameters	normalized to 1W	**52.9 mW /g ± 20.8 % (k=2)**
SAR averaged over 10 cm^3 (10 g) of Body TSL	Condition	
SAR measured	250 mW input power	6.13 mW / g
SAR for nominal Body TSL parameters	normalized to 1W	**24.4 mW /g ± 20.4 % (k=2)**

©2015 A Test Lab Techno Corp.

In Collaboration with
s p e a g
CALIBRATION LABORATORY
Add: No.51 Xueyuan Road, Haidian District, Beijing, 100191, China
Tel: +86-10-62304633-2079 Fax: +86-10-62304633-2504
E-mail: cttl@chinattl.com Http://www.chinattl.cn

Appendix

Antenna Parameters with Head TSL

Impedance, transformed to feed point	52.7Ω+ 5.06jΩ
Return Loss	- 25.1dB

Antenna Parameters with Body TSL

Impedance, transformed to feed point	50.0Ω+ 6.01jΩ
Return Loss	- 24.4dB

General Antenna Parameters and Design

Electrical Delay (one direction)	1.037 ns

After long term use with 100W radiated power, only a slight warming of the dipole near the feedpoint can be measured.

The dipole is made of standard semirigid coaxial cable. The center conductor of the feeding line is directly connected to the second arm of the dipole. The antenna is therefore short-circuited for DC-signals. On some of the dipoles, small end caps are added to the dipole arms in order to improve matching when loaded according to the position as explained in the "Measurement Conditions" paragraph. The SAR data are not affected by this change. The overall dipole length is still according to the Standard.
No excessive force must be applied to the dipole arms, because they might bend or the soldered connections near the feedpoint may be damaged.

Additional EUT Data

Manufactured by	SPEAG

©2015 A Test Lab Techno Corp.

In Collaboration with
s p e a g
CALIBRATION LABORATORY
Add: No.51 Xueyuan Road, Haidian District, Beijing, 100191, China
Tel: +86-10-62304633-2079 Fax: +86-10-62304633-2504
E-mail: cttl@chinattl.com Http://www.chinattl.cn

DASY5 Validation Report for Head TSL Date: 03.12.2015

Test Laboratory: CTTL, Beijing, China

DUT: Dipole 2450 MHz; Type: D2450V2; Serial: D2450V2 - SN: 712

Communication System: UID 0, CW; Frequency: 2450 MHz;Duty Cycle: 1:1

Medium parameters used: f = 2450 MHz; σ = 1.774 S/m; εr = 39.52; ρ = 1000 kg/m3

Phantom section: Right Section

Measurement Standard: DASY5 (IEEE/IEC/ANSI C63.19-2007)

DASY5 Configuration:

- Probe: ES3DV3 - SN3142; ConvF(4.58, 4.58, 4.58); Calibrated: 2014-09-01;
- Sensor-Surface: 3mm (Mechanical Surface Detection)
- Electronics: DAE4 Sn1331; Calibrated: 2015-01-20
- Phantom: Triple Flat Phantom 5.1C; Type: QD 000 P51 CA; Serial: 1161/1
- Measurement SW: DASY52, Version 52.8 (8); SEMCAD X Version 14.6.10 (7331)

System Performance Check at Frequencies above 1 GHz/d=10mm, Pin=250 mW, dist=3.0mm (ES-Probe)/Zoom Scan (7x7x7) (7x7x7)/Cube 0: Measurement grid: dx=5mm, dy=5mm, dz=5mm

Reference Value = 99.87 V/m; Power Drift = 0.04 dB

Peak SAR (extrapolated) = 28.9 W/kg

SAR(1 g) = 13.7 W/kg; SAR(10 g) = 6.33 W/kg

Maximum value of SAR (measured) = 18.0 W/kg

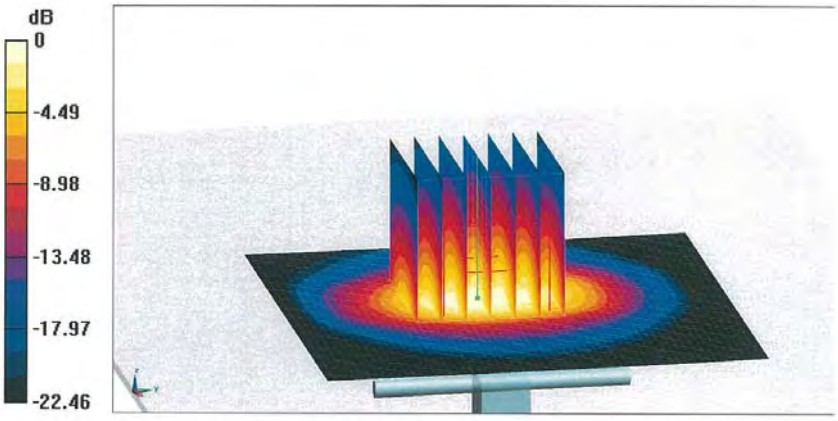

0 dB = 18.0 W/kg = 12.55 dBW/kg

Certificate No: Z15-97042 Page 5 of 8

In Collaboration with
s p e a g
CALIBRATION LABORATORY
Add: No.51 Xueyuan Road, Haidian District, Beijing, 100191, China
Tel: +86-10-62304633-2079 Fax: +86-10-62304633-2504
E-mail: cttl@chinattl.com Http://www.chinattl.cn

Impedance Measurement Plot for Head TSL

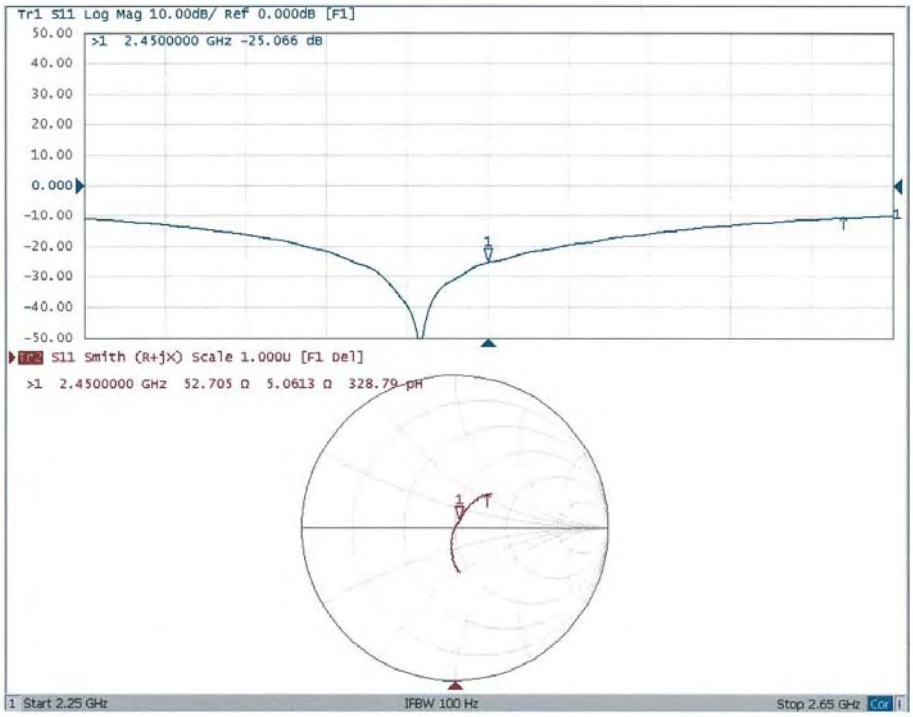

©2015 A Test Lab Techno Corp.

In Collaboration with
s p e a g
CALIBRATION LABORATORY
Add: No.51 Xueyuan Road, Haidian District, Beijing, 100191, China
Tel: +86-10-62304633-2079 Fax: +86-10-62304633-2504
E-mail: cttl@chinattl.com Http://www.chinattl.cn

DASY5 Validation Report for Body TSL Date: 03.12.2015

Test Laboratory: CTTL, Beijing, China

DUT: Dipole 2450 MHz; Type: D2450V2; Serial: D2450V2 - SN: 712

Communication System: UID 0, CW; Frequency: 2450 MHz;Duty Cycle: 1:1

Medium parameters used: f = 2450 MHz; σ = 1.962 S/m; ε_r = 51.82; ρ = 1000 kg/m^3

Phantom section: Center Section

Measurement Standard: DASY5 (IEEE/IEC/ANSI C63.19-2007)

DASY5 Configuration:

- Probe: ES3DV3 - SN3142; ConvF(4.29, 4.29, 4.29); Calibrated: 2014-09-01;
- Sensor-Surface: 3mm (Mechanical Surface Detection)
- Electronics: DAE4 Sn1331; Calibrated: 2015-01-20
- Phantom: Triple Flat Phantom 5.1C; Type: QD 000 P51 CA; Serial: 1161/1
- Measurement SW: DASY52, Version 52.8 (8); SEMCAD X Version 14.6.10 (7331)

System Performance Check at Frequencies above 1 GHz/d=10mm, Pin=250 mW, dist=3.0mm (ES-Probe)/Zoom Scan (7x7x7) (8x7x7)/Cube 0: Measurement grid: dx=5mm, dy=5mm, dz=5mm

Reference Value = 94.63 V/m; Power Drift = 0.02 dB

Peak SAR (extrapolated) = 27.6 W/kg

SAR(1 g) = 13.3 W/kg; SAR(10 g) = 6.13 W/kg

Maximum value of SAR (measured) = 17.6 W/kg

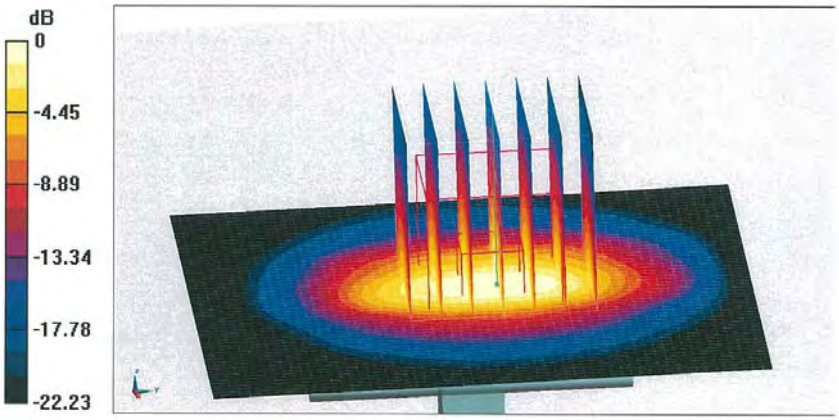

0 dB = 17.6 W/kg = 12.46 dBW/kg

©2015 A Test Lab Techno Corp.

In Collaboration with
speag
CALIBRATION LABORATORY

Add: No.51 Xueyuan Road, Haidian District, Beijing, 100191, China
Tel: +86-10-62304633-2079 Fax: +86-10-62304633-2504
E-mail: cttl@chinattl.com Http://www.chinattl.cn

Impedance Measurement Plot for Body TSL

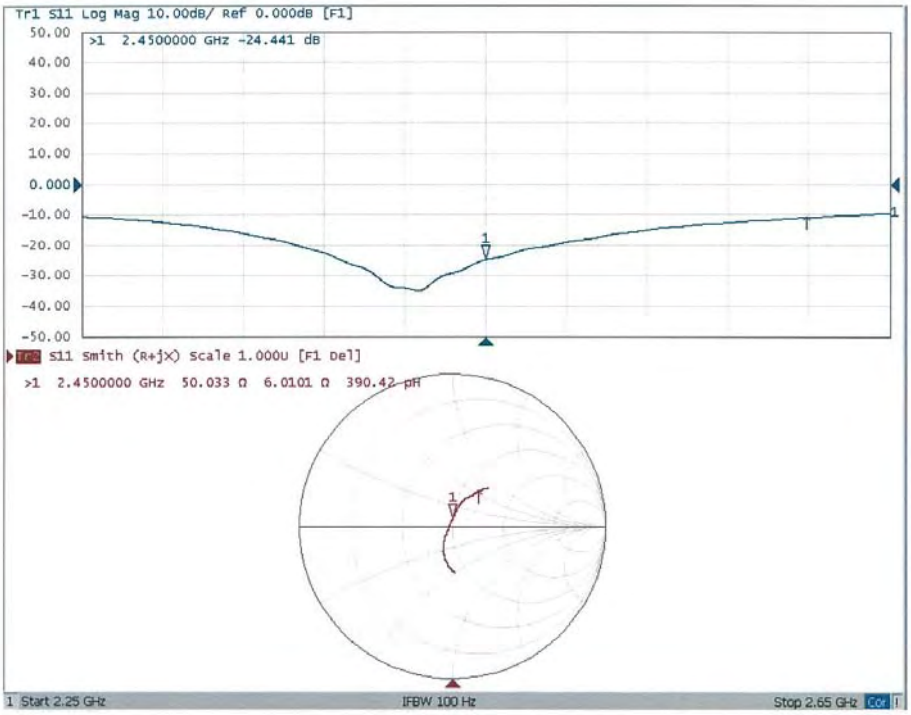

©2015 A Test Lab Techno Corp.

February 24, 2015

Acceptable Conditions for SAR Measurements Using Probes and Dipoles Calibrated under the SPEAG-CTTL Dual-Logo Calibration Program to Support FCC Equipment Certification

The acceptable conditions for SAR measurements using probes, dipoles and DAEs calibrated by CTTL (*China Telecommunication Technology Labs*), under the Dual-Logo Calibration Certificate program and quality assurance (QA) protocols established between SPEAG (*Schmid & Partner Engineering AG, Switzerland*) and CTTL, to support FCC (*U.S. Federal Communications Commission*) equipment certification are defined and described in the following. The conditions in this KDB are valid until December 31, 2015.

1) The agreement established between SPEAG and CTTL is only applicable to calibration services performed by CTTL where its clients (companies and divisions of such companies) are headquartered in the Greater China Region, including Taiwan and Hong Kong. CTTL shall inform the FCC of any changes or early termination to the agreement.
2) Only a subset of the calibration services specified in the SPEAG-CTTL agreement, while it remains valid, are applicable to SAR measurements performed using such equipment for supporting FCC equipment certification. These are identified in the following.
   a) Calibration of dosimetric (SAR) probes EX3DVx, ET3DVx and ES3DVx.
      i) Free-space E-field and H-field probes, including those used for HAC (hearing aid compatibility) evaluation, temperature probes, other probes or equipment not identified in this document, when calibrated by CTTL, are excluded and cannot be used for measurements to support FCC equipment certification.
      ii) Signal specific and bundled probe calibrations based on PMR (probe modulation response) characteristics or probe sensor model based linearization methods that are not fully described in SAR standards are excluded and cannot be used for measurements to support FCC equipment certification.
   b) Calibration of SAR system validation dipoles, excluding HAC dipoles.
   c) Calibration of data acquisition electronics DAE3Vx, DAE4Vx and DAEasyVx.
   d) For FCC equipment certification purposes, the frequency range of SAR probe and dipole calibrations is limited to 700 MHz - 6 GHz and provided it is supported by the equipment identified in the CTTL QA protocol (a separate attachment to this document).
   e) The identical system and equipment setup, measurement configurations, hardware, evaluation algorithms, calibration and QA protocols, including the format of calibration certificates and reports used by SPEAG shall be applied by CTTL. Equivalent test equipment and measurement configurations may be considered only when agreed by both SPEAG and the FCC.
   f) The calibrated items are only applicable to SPEAG DASY 4 and DASY 5 systems or higher version systems that satisfy the requirements of this KDB.
3) The SPEAG-CTTL agreement includes specific protocols identified in the following to ensure the quality of calibration services provided by CTTL under this SPEAG-

©2015 A Test Lab Techno Corp.

CTTL Dual-Logo calibration agreement are equivalent to the calibration services provided by SPEAG. CTTL shall apply the required protocols without modification and, upon request, provide copies of documentation to the FCC to substantiate program implementation.

a) The Inter-laboratory Calibration Evaluation (ILCE) stated in the CTTL QA protocol shall be performed between SPEAG and CTTL at least once every 12 months. The ILCE acceptance criteria defined in the CTTL QA protocol shall be satisfied for the CTTL, SPEAG and FCC agreements to remain valid.
b) Check of Calibration Certificate (CCC) shall be performed by SPEAG for all calibrations performed by CTTL. Written confirmation from SPEAG is required for CTTL to issue calibration certificates under the SPEAG-CTTL Dual-Logo calibration program. Quarterly reports for all calibrations performed by CTTL under the program are also issued by SPEAG.
c) The calibration equipment and measurement system used by CTTL shall be verified before each calibration service according to the specific reference SAR probes, dipoles, and DAE calibrated by SPEAG. The results shall be reproducible and within the defined acceptance criteria specified in the CTTL QA protocol before each actual calibration can commence. CTTL shall maintain records of the measurement and calibration system verification results for all calibrations.
d) Quality Check of Calibration (QCC) certificates shall be performed by SPEAG at least once every 12 months. SPEAG shall visit CTTL facilities to verify the laboratory, equipment, applied procedures and plausibility of randomly selected certificates.

4) A copy of this document shall be provided to CTTL clients that accept calibration services according to the SPEAG-CTTL Dual-Logo calibration program, which should be presented to a TCB (*Telecommunication Certification Body*), to facilitate FCC equipment approval.
5) CTTL shall address any questions raised by its clients or TCBs relating to the SPEAG-CTTL Dual-Logo calibration program and inform the FCC and SPEAG of any critical issues.

©2015 A Test Lab Techno Corp.

In Collaboration with
s p e a g
CALIBRATION LABORATORY

Add: No.51 Xueyuan Road, Haidian District, Beijing, 100191, China
Tel: +86-10-62304633-2079 Fax: +86-10-62304633-2504
E-mail: cttl@chinattl.com Http://www.chinattl.cn

CALIBRATION No. L0570

Client ATL Certificate No: Z15-97003

CALIBRATION CERTIFICATE

Object	EX3DV4 - SN:3847
Calibration Procedure(s)	FD-Z11-2-004-01 Calibration Procedures for Dosimetric E-field Probes
Calibration date:	January 30, 2015

This calibration Certificate documents the traceability to national standards, which realize the physical units of measurements(SI). The measurements and the uncertainties with confidence probability are given on the following pages and are part of the certificate.

All calibrations have been conducted in the closed laboratory facility: environment temperature(22±3)℃ and humidity<70%.

Calibration Equipment used (M&TE critical for calibration)

Primary Standards	ID #	Cal Date(Calibrated by, Certificate No.)	Scheduled Calibration
Power Meter NRP2	101919	01-Jul-14 (CTTL, No.J14X02146)	Jun-15
Power sensor NRP-Z91	101547	01-Jul-14 (CTTL, No.J14X02146)	Jun-15
Power sensor NRP-Z91	101548	01-Jul-14 (CTTL, No.J14X02146)	Jun-15
Reference10dBAttenuator	18N50W-10dB	13-Mar-14(TMC,No.JZ14-1103)	Mar-16
Reference20dBAttenuator	18N50W-20dB	13-Mar-14(TMC,No.JZ14-1104)	Mar-16
Reference Probe EX3DV4	SN 3617	28-Aug-14(SPEAG,No.EX3-3617_Aug14)	Aug-15
DAE4	SN 777	17-Sep-14 (SPEAG, DAE4-777_Sep14)	Sep -15
Secondary Standards	**ID #**	**Cal Date(Calibrated by, Certificate No.)**	**Scheduled Calibration**
SignalGeneratorMG3700A	6201052605	01-Jul-14 (CTTL, No.J14X02145)	Jun-15
Network Analyzer E5071C	MY46110673	15-Feb-14 (TMC, No.JZ14-781)	Feb-15

	Name	Function	Signature
Calibrated by:	Yu Zongying	SAR Test Engineer	
Reviewed by:	Qi Dianyuan	SAR Project Leader	
Approved by:	Lu Bingsong	Deputy Director of the laboratory	

Issued: January 31, 2015

This calibration certificate shall not be reproduced except in full without written approval of the laboratory.

Certificate No: Z15-97003 Page 1 of 11

In Collaboration with
s p e a g
CALIBRATION LABORATORY

Add: No.51 Xueyuan Road, Haidian District, Beijing, 100191, China
Tel: +86-10-62304633-2079 Fax: +86-10-62304633-2504
E-mail: cttl@chinattl.com Http://www.chinattl.cn

Glossary:

TSL	tissue simulating liquid
NORMx,y,z	sensitivity in free space
ConvF	sensitivity in TSL / NORMx,y,z
DCP	diode compression point
CF	crest factor (1/duty_cycle) of the RF signal
A,B,C,D	modulation dependent linearization parameters
Polarization Φ	Φ rotation around probe axis
Polarization θ	θ rotation around an axis that is in the plane normal to probe axis (at measurement center), i θ=0 is normal to probe axis
Connector Angle	information used in DASY system to align probe sensor X to the robot coordinate system

Calibration is Performed According to the Following Standards:

a) IEEE Std 1528-2013, "IEEE Recommended Practice for Determining the Peak Spatial-Averaged Specific Absorption Rate (SAR) in the Human Head from Wireless Communications Devices: Measurement Techniques", June 2013

b) IEC 62209-1, "Procedure to measure the Specific Absorption Rate (SAR) for hand-held devices used in close proximity to the ear (frequency range of 300MHz to 3GHz)", February 2005

Methods Applied and Interpretation of Parameters:

- *NORMx,y,z:* Assessed for E-field polarization θ=0 (f≤900MHz in TEM-cell; f>1800MHz: waveguide). NORMx,y,z are only intermediate values, i.e., the uncertainties of NORMx,y,z does not effect the E^2-field uncertainty inside TSL (see below ConvF).
- *NORM(f)x,y,z = NORMx,y,z* frequency_response* (see Frequency Response Chart). This linearization is implemented in DASY4 software versions later than 4.2. The uncertainty of the frequency response is included in the stated uncertainty of ConvF.
- *DCPx,y,z:* DCP are numerical linearization parameters assessed based on the data of power sweep (no uncertainty required). DCP does not depend on frequency nor media.
- PAR: PAR is the Peak to Average Ratio that is not calibrated but determined based on the signal characteristics.
- *Ax,y,z; Bx,y,z; Cx,y,z;VRx,y,z:*A,B,C are numerical linearization parameters assessed based on the data of power sweep for specific modulation signal. The parameters do not depend on frequency nor media. VR is the maximum calibration range expressed in RMS voltage across the diode.
- *ConvF and Boundary Effect Parameters:* Assessed in flat phantom using E-field (or Temperature Transfer Standard for f≤800MHz) and inside waveguide using analytical field distributions based on power measurements for f >800MHz. The same setups are used for assessment of the parameters applied for boundary compensation (alpha, depth) of which typical uncertainty valued are given. These parameters are used in DASY4 software to improve probe accuracy close to the boundary. The sensitivity in TSL corresponds to NORMx,y,z* ConvF whereby the uncertainty corresponds to that given for ConvF. A frequency dependent ConvF is used in DASY version 4.4 and higher which allows extending the validity from±50MHz to±100MHz.
- *Spherical isotropy (3D deviation from isotropy):* in a field of low gradients realized using a flat phantom exposed by a patch antenna.
- *Sensor Offset:* The sensor offset corresponds to the offset of virtual measurement center from the probe tip (on probe axis). No tolerance required.
- *Connector Angle:* The angle is assessed using the information gained by determining the *NORMx* (no uncertainty required).

©2015 A Test Lab Techno Corp.

In Collaboration with
s p e a g
CALIBRATION LABORATORY
Add: No.51 Xueyuan Road, Haidian District, Beijing, 100191, China
Tel: +86-10-62304633-2079 Fax: +86-10-62304633-2504
E-mail: cttl@chinattl.com Http://www.chinattl.cn

Probe EX3DV4

SN: 3847

Calibrated: January 30, 2015

Calibrated for DASY/EASY Systems

(Note: non-compatible with DASY2 system!)

©2015 A Test Lab Techno Corp.

In Collaboration with
s p e a g
CALIBRATION LABORATORY
Add: No.51 Xueyuan Road, Haidian District, Beijing, 100191, China
Tel: +86-10-62304633-2079 Fax: +86-10-62304633-2504
E-mail: cttl@chinattl.com Http://www.chinattl.cn

DASY/EASY – Parameters of Probe: EX3DV4 – SN: 3847

Basic Calibration Parameters

	Sensor X	Sensor Y	Sensor Z	Unc (k=2)
Norm(μV/(V/m)^2)[A]	0.45	0.35	0.42	±10.8%
DCP(mV)[B]	102.5	102.7	101.5	

Modulation Calibration Parameters

UID	Communication System Name		A dB	B dB√μV	C	D dB	VR mV	Unc[E] (k=2)
0	CW	X	0.0	0.0	1.0	0.00	176.8	±2.7%
		Y	0.0	0.0	1.0		158.5	
		Z	0.0	0.0	1.0		170.2	

The reported uncertainty of measurement is stated as the standard uncertainty of Measurement multiplied by the coverage factor k=2, which for a normal distribution Corresponds to a coverage probability of approximately 95%.

[A] The uncertainties of Norm X, Y, Z do not affect the E^2-field uncertainty inside TSL (see Page 5 and Page 6).
[B] Numerical linearization parameter: uncertainty not required.
[E] Uncertainly is determined using the max. deviation from linear response applying rectangular distribution and is expressed for the square of the field value.

©2015 A Test Lab Techno Corp.

In Collaboration with
s p e a g
CALIBRATION LABORATORY
Add: No.51 Xueyuan Road, Haidian District, Beijing, 100191, China
Tel: +86-10-62304633-2079 Fax: +86-10-62304633-2504
E-mail: cttl@chinattl.com Http://www.chinattl.cn

DASY/EASY – Parameters of Probe: EX3DV4 – SN: 3847

Calibration Parameter Determined in Head Tissue Simulating Media

f [MHz][C]	Relative Permittivity[F]	Conductivity (S/m)[F]	ConvF X	ConvF Y	ConvF Z	Alpha[G]	Depth[G] (mm)	Unct. (k=2)
750	41.9	0.89	9.71	9.71	9.71	0.13	1.25	±12%
835	41.5	0.90	9.12	9.12	9.12	0.14	1.26	±12%
900	41.5	0.97	8.99	8.99	8.99	0.13	1.34	±12%
1750	40.1	1.37	7.92	7.92	7.92	0.16	1.40	±12%
1900	40.0	1.40	7.79	7.79	7.79	0.17	1.35	±12%
2000	40.0	1.40	7.72	7.72	7.72	0.13	1.71	±12%
2300	39.5	1.67	7.48	7.48	7.48	0.28	0.91	±12%
2450	39.2	1.80	7.06	7.06	7.06	0.50	0.77	±12%
2600	39.0	1.96	6.91	6.91	6.91	0.66	0.67	±12%
5200	36.0	4.66	5.32	5.32	5.32	0.45	1.16	±13%
5300	35.9	4.76	5.04	5.04	5.04	0.43	1.18	±13%
5500	35.6	4.96	4.83	4.83	4.83	0.46	1.26	±13%
5600	35.5	5.07	4.77	4.77	4.77	0.52	1.10	±13%
5800	35.3	5.27	4.66	4.66	4.66	0.55	1.11	±13%

[C] Frequency validity of ±100MHz only applies for DASY v4.4 and higher (Page 2), else it is restricted to ±50MHz. The uncertainty is the RSS of ConvF uncertainty at calibration frequency and the uncertainty for the indicated frequency band.
[F] At frequency below 3 GHz, the validity of tissue parameters (ε and σ) can be relaxed to ±10% if liquid compensation formula is applied to measured SAR values. At frequencies above 3 GHz, the validity of tissue parameters (ε and σ) is restricted to ±5%. The uncertainty is the RSS of the ConvF uncertainty for indicated target tissue parameters.
[G] Alpha/Depth are determined during calibration. SPEAG warrants that the remaining deviation due to the boundary effect after compensation is always less than ± 1% for frequencies below 3 GHz and below ± 2% for the frequencies between 3-6 GHz at any distance larger than half the probe tip diameter from the boundary.

©2015 A Test Lab Techno Corp.

In Collaboration with
s p e a g
CALIBRATION LABORATORY
Add: No.51 Xueyuan Road, Haidian District, Beijing, 100191, China
Tel: +86-10-62304633-2079 Fax: +86-10-62304633-2504
E-mail: cttl@chinattl.com Http://www.chinattl.cn

DASY/EASY – Parameters of Probe: EX3DV4 – SN: 3847

Calibration Parameter Determined in Body Tissue Simulating Media

f [MHz][C]	Relative Permittivity[F]	Conductivity (S/m)[F]	ConvF X	ConvF Y	ConvF Z	Alpha[G]	Depth[G] (mm)	Unct. (k=2)
750	55.5	0.96	9.53	9.53	9.53	0.14	1.56	±12%
835	55.2	0.97	9.42	9.42	9.42	0.18	1.36	±12%
900	55.0	1.05	9.19	9.19	9.19	0.20	1.24	±12%
1750	53.4	1.49	7.65	7.65	7.65	0.13	1.80	±12%
1900	53.3	1.52	7.46	7.46	7.46	0.16	1.43	±12%
2000	53.3	1.52	7.65	7.65	7.65	0.13	2.07	±12%
2300	52.9	1.81	7.52	7.52	7.52	0.34	1.15	±12%
2450	52.7	1.95	7.29	7.29	7.29	0.32	1.18	±12%
2600	52.5	2.16	7.19	7.19	7.19	0.42	0.91	±12%
5200	49.0	5.30	4.96	4.96	4.96	0.52	1.21	±13%
5300	48.9	5.42	4.78	4.78	4.78	0.60	1.03	±13%
5500	48.6	5.65	4.42	4.42	4.42	0.58	1.19	±13%
5600	48.5	5.77	4.41	4.41	4.41	0.61	1.04	±13%
5800	48.2	6.00	4.35	4.35	4.35	0.66	0.90	±13%

[C] Frequency validity of ±100MHz only applies for DASY v4.4 and higher (Page 2), else it is restricted to ±50MHz. The uncertainty is the RSS of ConvF uncertainty at calibration frequency and the uncertainty for the indicated frequency band.
[F] At frequency below 3 GHz, the validity of tissue parameters (ε and σ) can be relaxed to ±10% if liquid compensation formula is applied to measured SAR values. At frequencies above 3 GHz, the validity of tissue parameters (ε and σ) is restricted to ±5%. The uncertainty is the RSS of the ConvF uncertainty for indicated target tissue parameters.
[G] Alpha/Depth are determined during calibration. SPEAG warrants that the remaining deviation due to the boundary effect after compensation is always less than ± 1% for frequencies below 3 GHz and below ± 2% for the frequencies between 3-6 GHz at any distance larger than half the probe tip diameter from the boundary.

©2015 A Test Lab Techno Corp.

In Collaboration with
s p e a g
CALIBRATION LABORATORY
Add: No.51 Xueyuan Road, Haidian District, Beijing, 100191, China
Tel: +86-10-62304633-2079 Fax: +86-10-62304633-2504
E-mail: cttl@chinattl.com Http://www.chinattl.cn

Frequency Response of E-Field
(TEM-Cell: ifi110 EXX, Waveguide: R22)

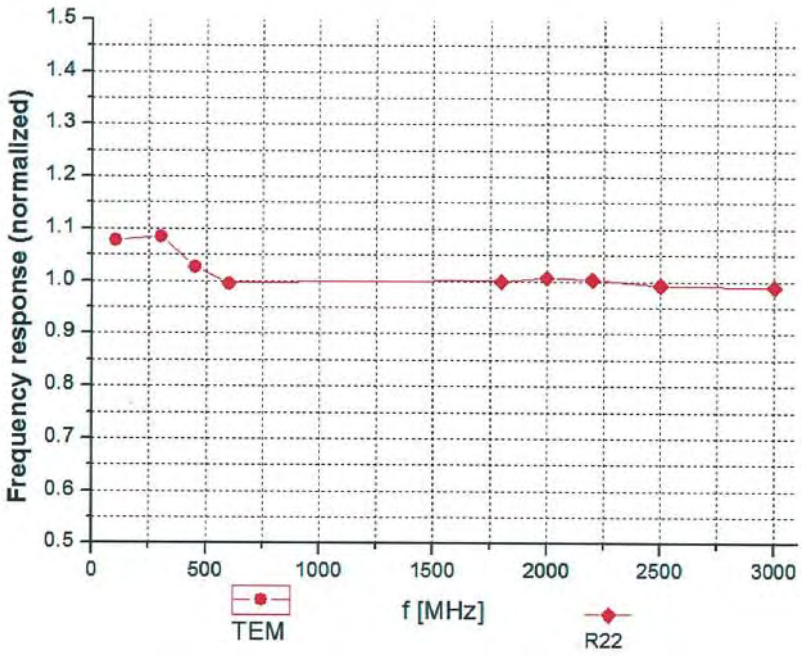

Uncertainty of Frequency Response of E-field: ±7.5% (k=2)

©2015 A Test Lab Techno Corp.

In Collaboration with
CTTL speag CALIBRATION LABORATORY
Add: No.51 Xueyuan Road, Haidian District, Beijing, 100191, China
Tel: +86-10-62304633-2079 Fax: +86-10-62304633-2504
E-mail: cttl@chinattl.com Http://www.chinattl.cn

Receiving Pattern (Φ), θ=0°

f=600 MHz, TEM

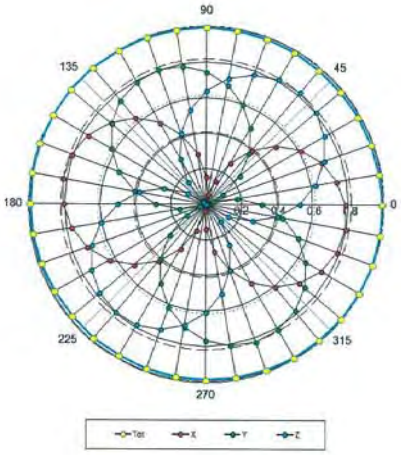

f=1800 MHz, R22

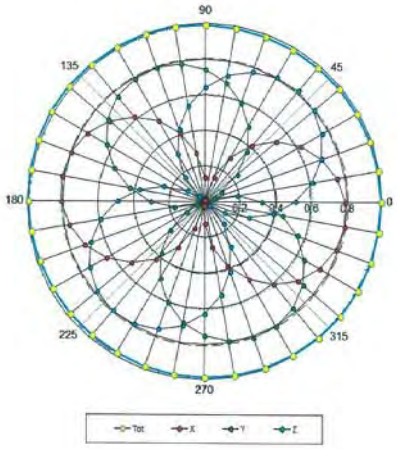

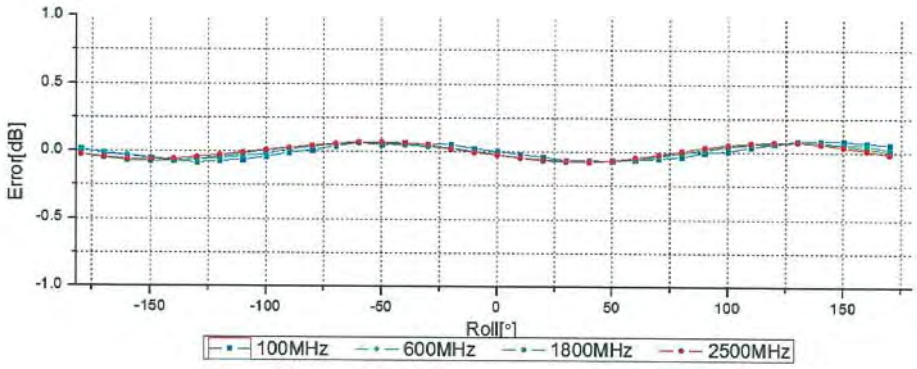

Uncertainty of Axial Isotropy Assessment: ±0.9% (k=2)

©2015 A Test Lab Techno Corp.

In Collaboration with
s p e a g
CALIBRATION LABORATORY
Add: No.51 Xueyuan Road, Haidian District, Beijing, 100191, China
Tel: +86-10-62304633-2079 Fax: +86-10-62304633-2504
E-mail: cttl@chinattl.com Http://www.chinattl.cn

Dynamic Range f(SAR_{head})
(TEM cell, f = 900 MHz)

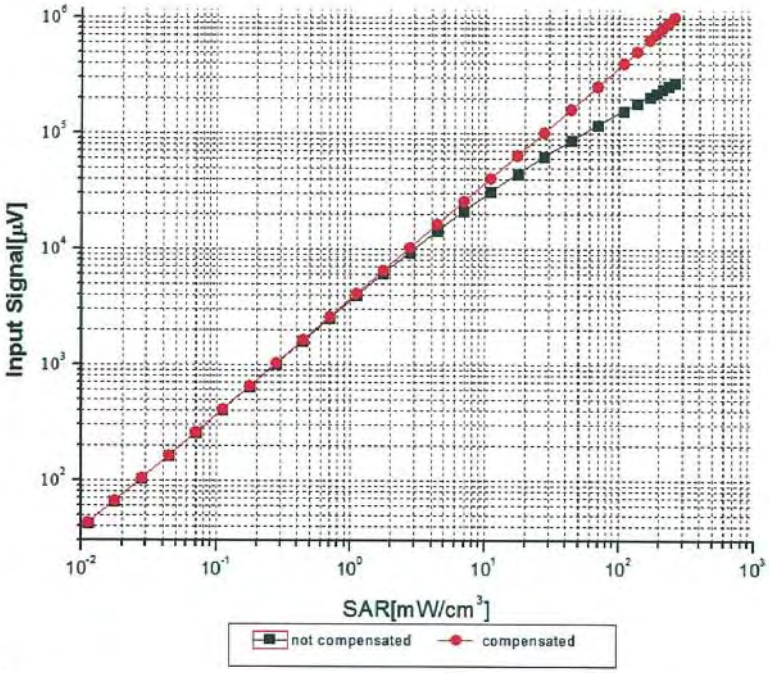

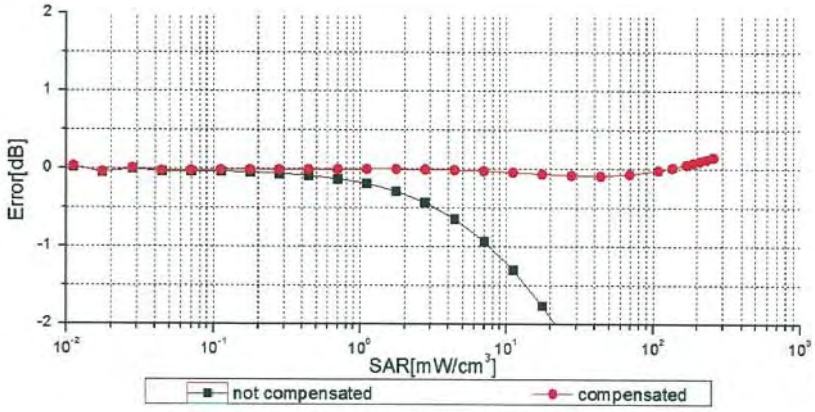

Uncertainty of Linearity Assessment: ±0.9% (k=2)

Certificate No: Z15-97003 Page 9 of 11

In Collaboration with
s p e a g
CALIBRATION LABORATORY
Add: No.51 Xueyuan Road, Haidian District, Beijing, 100191, China
Tel: +86-10-62304633-2079 Fax: +86-10-62304633-2504
E-mail: cttl@chinattl.com Http://www.chinattl.cn

Conversion Factor Assessment

f=900 MHz, WGLS R9(H_convF)

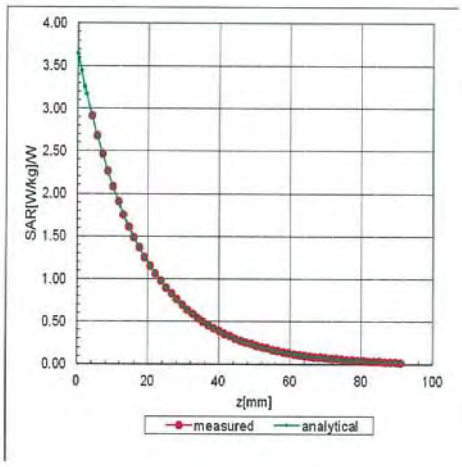

f=1750 MHz, WGLS R22(H_convF)

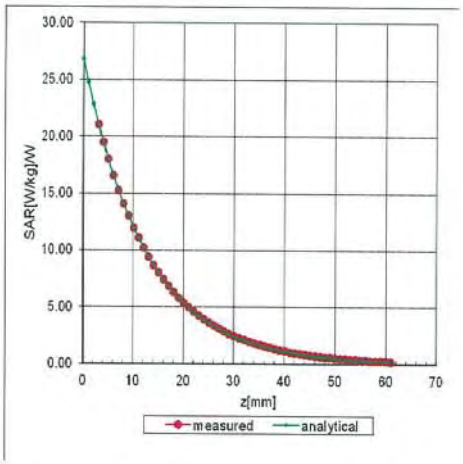

Deviation from Isotropy in Liquid

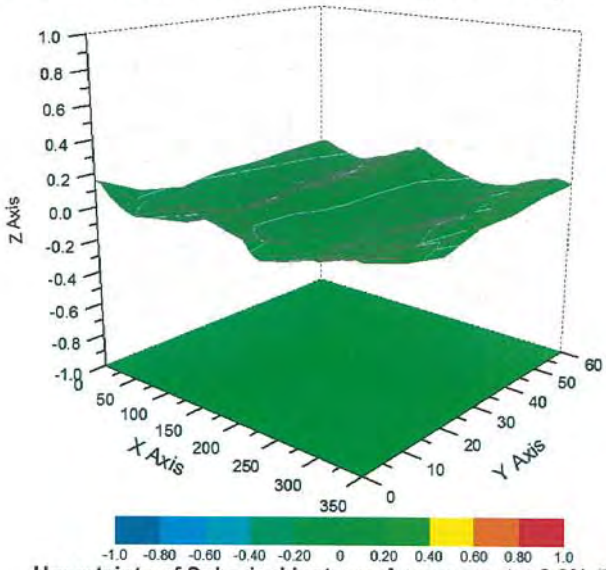

Uncertainty of Spherical Isotropy Assessment: ±2.8% (K=2)

©2015 A Test Lab Techno Corp.

In Collaboration with
s p e a g
CALIBRATION LABORATORY
Add: No.51 Xueyuan Road, Haidian District, Beijing, 100191, China
Tel: +86-10-62304633-2079 Fax: +86-10-62304633-2504
E-mail: cttl@chinattl.com Http://www.chinattl.cn

DASY/EASY – Parameters of Probe: EX3DV4 – SN: 3847

Other Probe Parameters

Sensor Arrangement	Triangular
Connector Angle (°)	12.6
Mechanical Surface Detection Mode	enabled
Optical Surface Detection Mode	disable
Probe Overall Length	337mm
Probe Body Diameter	10mm
Tip Length	9mm
Tip Diameter	2.5mm
Probe Tip to Sensor X Calibration Point	1mm
Probe Tip to Sensor Y Calibration Point	1mm
Probe Tip to Sensor Z Calibration Point	1mm
Recommended Measurement Distance from Surface	1.4mm

©2015 A Test Lab Techno Corp.

In Collaboration with
CTTL speag
CALIBRATION LABORATORY
Add: No.51 Xueyuan Road, Haidian District, Beijing, 100191, China
Tel: +86-10-62304633-2079 Fax: +86-10-62304633-2504
E-mail: cttl@chinattl.com Http://www.chinattl.cn

CALIBRATION No. L0570

Client : ATL Certificate No: Z15-97004

CALIBRATION CERTIFICATE

Object	DAE4 - SN: 541
Calibration Procedure(s)	FD-Z11-2-002-01 Calibration Procedure for the Data Acquisition Electronics (DAEx)
Calibration date:	February 03, 2015

This calibration Certificate documents the traceability to national standards, which realize the physical units of measurements(SI). The measurements and the uncertainties with confidence probability are given on the following pages and are part of the certificate.

All calibrations have been conducted in the closed laboratory facility: environment temperature(22±3)°C and humidity<70%.

Calibration Equipment used (M&TE critical for calibration)

Primary Standards	ID #	Cal Date(Calibrated by, Certificate No.)	Scheduled Calibration
Process Calibrator 753	1971018	01-July-14 (CTTL, No:J14X02147)	July-15

	Name	Function	Signature
Calibrated by:	Yu Zongying	SAR Test Engineer	
Reviewed by:	Qi Dianyuan	SAR Project Leader	
Approved by:	Lu Bingsong	Deputy Director of the laboratory	

Issued: February 04, 2015

This calibration certificate shall not be reproduced except in full without written approval of the laboratory.

Certificate No: Z15-97004 Page 1 of 3

In Collaboration with
s p e a g
CALIBRATION LABORATORY
Add: No.51 Xueyuan Road, Haidian District, Beijing, 100191, China
Tel: +86-10-62304633-2079 Fax: +86-10-62304633-2504
E-mail: cttl@chinattl.com Http://www.chinattl.cn

Glossary:

DAE	data acquisition electronics
Connector angle	information used in DASY system to align probe sensor X to the robot coordinate system.

Methods Applied and Interpretation of Parameters:

- *DC Voltage Measurement*: Calibration Factor assessed for use in DASY system by comparison with a calibrated instrument traceable to national standards. The figure given corresponds to the full scale range of the voltmeter in the respective range.
- *Connector angle*: The angle of the connector is assessed measuring the angle mechanically by a tool inserted. Uncertainty is not required.
- The report provide only calibration results for DAE, it does not contain other performance test results.

©2015 A Test Lab Techno Corp.

In Collaboration with
s p e a g
CALIBRATION LABORATORY
Add: No.51 Xueyuan Road, Haidian District, Beijing, 100191, China
Tel: +86-10-62304633-2079 Fax: +86-10-62304633-2504
E-mail: cttl@chinattl.com Http://www.chinattl.cn

DC Voltage Measurement

A/D - Converter Resolution nominal

High Range: 1LSB = 6.1μV , full range = -100...+300 mV
Low Range: 1LSB = 61nV , full range = -1.....+3mV

DASY measurement parameters: Auto Zero Time: 3 sec; Measuring time: 3 sec

Calibration Factors	X	Y	Z
High Range	404.549 ± 0.15% (k=2)	404.414 ± 0.15% (k=2)	404.175 ± 0.15% (k=2)
Low Range	3.96723 ± 0.7% (k=2)	3.93603 ± 0.7% (k=2)	3.97491 ± 0.7% (k=2)

Connector Angle

Connector Angle to be used in DASY system	290.5° ± 1 °

©2015 A Test Lab Techno Corp.