49.860MHZ VERSION

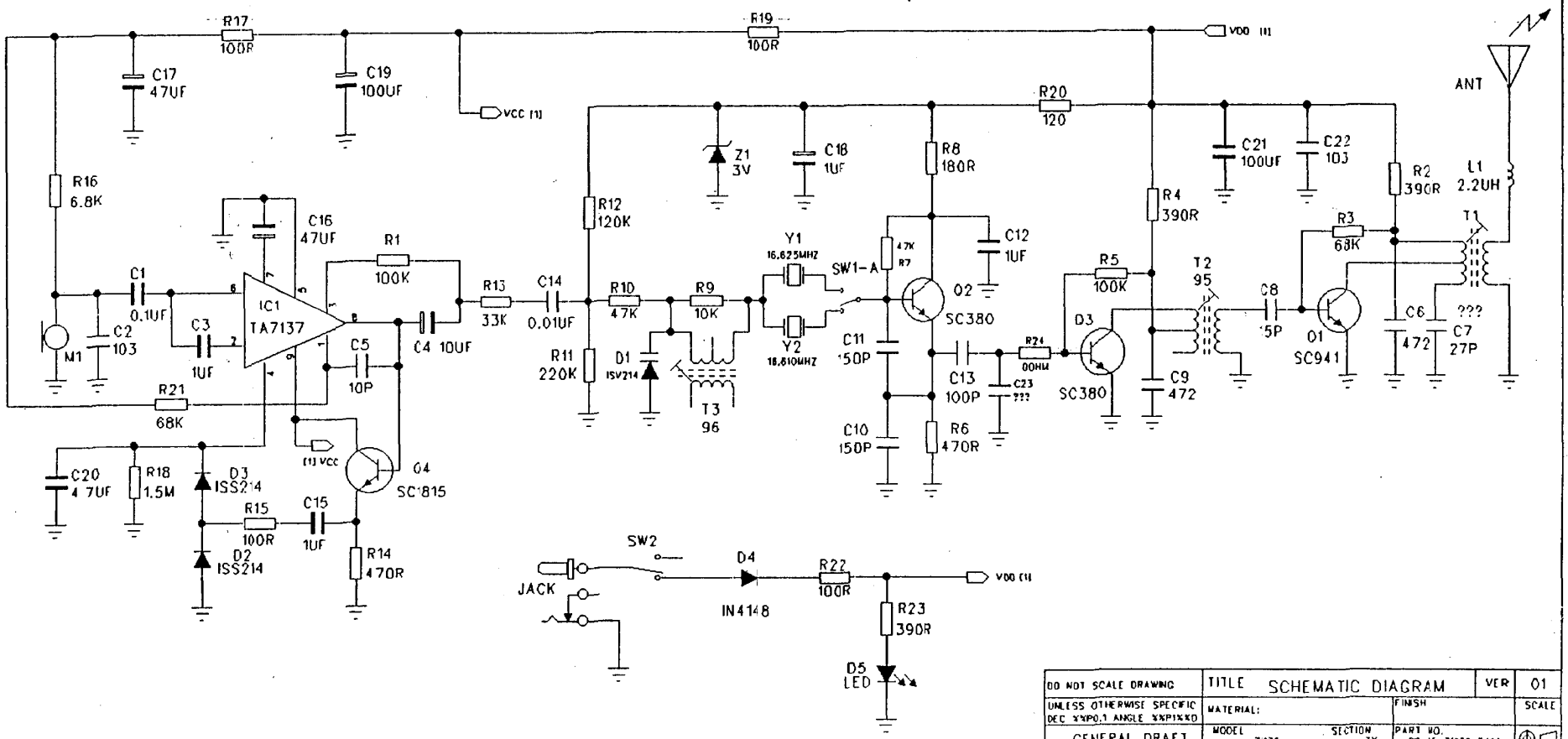

DO NOT SCALE DRAWING	TITLE SCHEMATIC DIAGRAM		VER	01
UNLESS OTHERWISE SPECIFIC DEC XXP0.1 ANGLE XXP1%XD	MATERIAL:		FINISH	SCALE
GENERAL DRAFT	MODEL 7638	SECTION TX	PART NO. SC-H-7638-T49A	
UNLESS OTHERWISE SPECIFIC WALL THICKNESS	DRAWN. LITTLE DATE:17/07/2001	CHECKED: DATE: CK WAN	APPROVED: DATE: BLEE	SIZE A4