**CDBR/AIU**

a) The mounting location of each CDBR/AIU should be accessible at later times for system checkout and troubleshooting.
b) Prior to unit installation, perform a visual inspection on each unit for damaged connectors or mounting hardware.
c) When connecting device cabling to a unit, insure that the connectors are fully engaged and that the screws joining the connectors are securely fastened. Also ensure that proper cable strain relief is provided at the unit interface to eliminate possible latent stress damage problems.
d) Only cables that are to be used with equipment presently installed in the aircraft shall be connected to each unit (i.e. **cables placed in the aircraft for future expansion of system capabilities shall not be connected to a CDBR/AIU).**

**Note: Only one digital phone shall be connected to a CDBR digital handset port. Do not connect more than one digital phone to a CDBR digital handset phone port. (Do not make a "split" phone cable to connect two phones or two jacks to one CDBR phone port.)**

**HANDSETS**

**5.1.16.1 General Infomation**

a) Prior to Handset installation, perform a visual inspection of each Handset and Handset cable for damaged connectors or mounting hardware.
b) When connecting a Handset to the Handset cabling, insure that the connector is fully engaged.
c) After the Handset is installed in the aircraft, remove the Handset from its holder and insure that the Handset cord ratchet mechanism functions properly.
d) Replace the Handset in the holder and insure that the Handset seats properly.

**5.1.6.2.1 System Overview**

The MagnaStar C-2000 Airborne Radio Telecommunications Unit (ARTU) operates a Local Area Network (LAN) bus, which LAN repeaters such as the CDBRs and the CAS use to interface with the ARTU. A Cabin Distribution Bus Repeater model 1 (CDBR-1) is used to interface one or two digital handsets to the system. A Call Alerter Switch (CAS) can be used to interface a ringer to each digital handset to the system.

**5.1.6.2.2 CDBR-1/Handset Cable (W6)**

The CDBR-1/Handset Cable is identified as cable W6 in the C-2000 Interface Control Document (ICD). If needed, refer to paragraph 2.3.4.1 of the C-2000 ICD for specific information about the pinouts or components of W6. W6 P1 connects to the CDBR-1 J3 or J4, and P2 provides a connection point for the digital handset

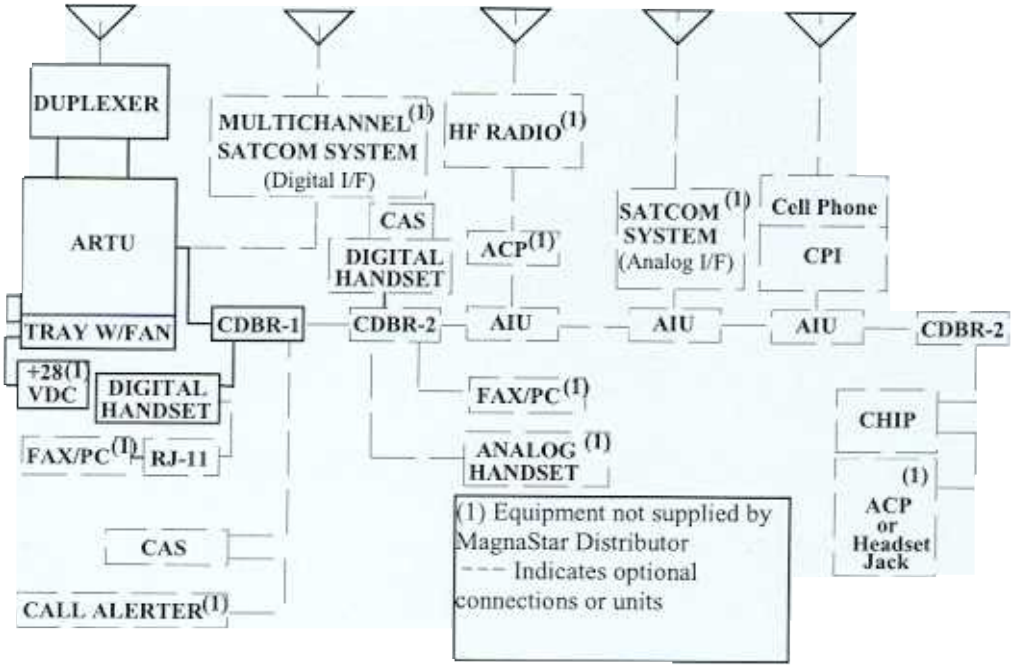


**Figure 5-2 MagnaStar C-2000 System**

### 5.1.7 FAX/MODEM CABLE

a) Prior to FAX/modem cable installation, perform a visual inspection on the FAX/modem, the Handset and the RJ-11 cable for damaged connectors or mounting hardware.

b) Remove the Handset from the bezel and connect the RJ-11 cable to the FAX/modem machine and the Handset.

c) When connecting the FAX/modem to the Handset, insure that the RJ-11 cable connectors are fully engaged.

d) Place the Handset back in the bezel. Insure that the RJ-11 cable is not pinched or damaged when the Handset is placed in the bezel.

## 5.2 AIU SOFTWARE COMPATIBILITY

The operation of the AIU requires MAGNASTAR software Version 2.2B or later.

After all the MagnaStar system components have been completely installed with the AIU connected to the HF or intercom equipment, apply power to the system and verify the software version of the ARTU. This is done by use of the Set-up and Maintenance screen on the handset. From the main menu press '9' to select Setup, press '3' to select Info from the Setup Menu, and finally press '+' from the Info menu. The ARTC software version will be displayed, verify that the version is 2.2B or later.

If the software version is not 2.2B or later you will need to download the current version of ARTC software. Contact your dealer or call Teledyne Controls (1-888-246-STAR) for a copy of the current software and technical assistance.

## 5.3 AIU FIELD ALIGNMENT PROCEDURE

The following alignment procedure should be used when an AIU is installed and interfaced to a HF radio or to other equipment, which will require input from J3 pin 3 of the AIU. This is a manual alignment procedure that adjusts the audio level that is output at J3 pin 3 of the AIU. The level of this output audio should be set to the specification of the external device that will be using it.

**A. Tools And Required Equipment:** The following items will be required:

1. Screwdriver: 1/16 Flat Head Adjustment Tool
2. Volt meter

**B. Alignment Procedure:** The following procedure outlines the required tasks to perform this alignment.

| Step | Procedure |
|---|---|
| 1 | Using the specification of the external device, which will receive audio from J3 pin 3 of the AIU, note the nominal level which should be applied to its input for normal operation.<br><br>Audio Input Level for the Extrnal Device_____VAC RMS. |
| 2. | Connect the positive lead of the voltmeter to the AIU test point located on the side of the AIU case and then place the negative lead on any point of the AIU case. Set the meter to measure AC volts RMS. |
| 3. | Using one of the MagnaStar handsets setup a HF Link:<br>From the handset's Main Menu,<br>Press '6' to select the "Link" option.<br>Press '3' to select "HF Radio" (this label can be customized). |
| 4. | With the HF link now connected continually press (or with ARTC 4.0A software and above press and release repeatedly) any one of the handset's numeric keypad digits to generate a fixed tone. This tone will in turn generate and audio signal at J3 pin 3 of the AIU. |
| 5. | Using the voltage measurement read on the voltmeter and the adjustment tool/screwdriver, set the AIU audio output level to the level noted in step 1, by turning the adjustment potentiometer located through the hole in the AIU cover. |
| 6. | Terminate the call and remove the meter. Place the adhesive backed circular aluminum cover PN 513917-2 packed with the unit over the AIU adjustment hole. |

# EQUIPMENT CHECKOUT WITH MAGNASTAR MAINTENANCE TERMINAL (MMT)

6.0 EQUIPMENT CHECKOUT WITH MAGNASTAR MAINTENANCE TERMINAL (MMT) .. 6-1
6.1 INTRODUCTION ..... 6-1
6.2 TEST EQUIPMENT REQUIREMENTS ..... 6-1
6.3 C-2000 INSTALLATION CHECKOUT with MMT ..... 6-2
6.3.1 MMT COMPUTER SET-UP ..... 6-2
6.3.2 MMT CABLE CONNECTION ..... 6-2
6.3.3 EXECUTING MMT SOFTWARE ..... 6-2
6.3.4 MMT OPERATION ..... 6-3
6.3.5 INTRODUCTION TO THE MMT INSTALLATION TUTORIAL ..... 6-4
6.3.6 C-2000 SYSTEM POWER UP ..... 6-5
6.3.7 MMT COMMUNICATION VERIFICATION ..... 6-6
6.3.8 START ARTU OPERATIONAL SOFTWARE ..... 6-7
6.3.9 LOCKED OFF-LINE STATE ..... 6-10
6.3.10 ARTU MOUNTING TRAY FAN TEST ..... 6-11
6.3.11 ARTU TRANSMITTER POWER OUTPUT MEASUREMENT ..... 6-12
6.3.12 RECEIVE SIGNAL STRENGTH MEASUREMENT ..... 6-14
6.3.13 HANDSET / LAN TEST ..... 6-17
6.3.14 RESET MAINTENANCE ACCESS PIN ..... 6-18
6.3.15 UNLOCKED ONLINE STATE ..... 6-19
6.3.16 RECEIVE SIGNAL STRENGTH MEASUREMENT USING GENSTAR GROUND STATION ..... 6-20
6.3.17 C-2000 INSTALLATION CONCLUSION ..... 6-22

## 6.0 EQUIPMENT CHECKOUT WITH MAGNASTAR MAINTENANCE TERMINAL (MMT)

### 6.1 INTRODUCTION

The MagnaStar Maintenance Terminal (MMT) consists of a laptop computer executing application software. The MMT is connected to the ARTU via the computer's serial port. The MMT is used to control the ARTU and monitor its functions. The MMT software includes an Installation Tutorial. This tutorial is a step-by-step procedural test that verifies the C-2000 installation. When the tutorial runs a particular test, a description of the test, the expected results of the test, and the actual results of the test will be displayed to the user. A troubleshoot screen is also available with each test step that provides a short description of steps to use for troubleshooting the system. The MMT is a very powerful tool for verifying and troubleshooting a MagnaStar C-2000 installation.

This section of the equipment checkout provides a text description for each individual test step of the MMT and a procedure with the necessary steps to accomplish each test step. The text describing the necessary steps to perform each test are shown in bold print.

Cable checkout, Section 4.0, and equipment installation, Section 5.0, should be completed before starting this section. Troubleshooting procedures screens are available while using the MMTI. These screens and troubleshooting information can be found in Section 9.0.

The following MMTI screen information corresponds with MMTI software version 4.0.A.

### 6.2 TEST EQUIPMENT REQUIREMENTS

The following list defines the test equipment necessary to completely check the functionality of the C-2000 system using the MagnaStar Maintenance Terminal.

1) MagnaStar MMT Installation software version 4.0 (MX 902156)
2) 386 or 486 IBM compatible computer with 4 Megabytes of extended RAM
3) Power Meter or Thru-line Watt meter for 895 MHz (20 watt minimum capability @ 900 MHz)
4) MMT cable (MX 422632-801)
5) MagnaStar Loop-Around Test Set (MX 902185-802)

### 6.3 C-2000 INSTALLATION CHECKOUT with MMT

The installer must know the following information before starting the MMT Installation:

a) The number of CDBRs and AIU's that are used in the installation.
b) The number of Handsets that are to be used in the installation.
c) If the location at which the installation is being performed will support communications with a GTE AIRFONE GenStar™ System Ground Station.

#### 6.3.1 MMT COMPUTER SET-UP

See Section 8 for computer set-up.

#### 6.3.2 MMT CABLE CONNECTION

The MMT computer is to be connected to the ARTU using the MMT cable. (The MMT interface is a RS-232C serial interface.)

**Connect the 9 pin D type connector of the MMT cable to the "COM " port of the MMT computer.**

**Remove the protective cap from the MMT connector of the ARTU.**

**Connect the circular connector of the MMT cable to the MMT connector on the ARTU.**

#### 6.3.3 EXECUTING MMT SOFTWARE

The following commands are to be used to start execution of the MMT application software in the computer.

**If required, power up the computer and wait for the computer to complete the boot process. It is assumed that the computer will boot up to the "C" drive with and have no other applications running.**

**Change the directory to the MTU directory, type: "CD MTU and press "ENTER".**

```
C:> cd mtu
```

**To start execution of the MMT software from the MTU directory, type: "MMTI" and press "ENTER".**

```
C:\MTU> mmti
```

**Note:** when the computer is executing the MMT software, the computer will be referenced as the "MMT".

### 6.3.4 MMT OPERATION

This step selects the installation tutorial mode of operation for the MMT from the from the start-up options menu after the MMT software has started execution.

When the MMT software has started execution, the computer screen will display information in two windows as shown below in Figure 6-1. The upper window is the MMT Radio Responses window which is used to display feedback (response) information from the ARTU. The installer will view the information in this window to verify proper performance of the C-2000 system during the installation. The lower window is the MMT Menu Prompt window which provides the installer with command options and provides a short summary of tasks for the installer to perform.

**Verify that the MMT cable connects the computer to the ARTU.**

**With the MMT computer screen display shown in Figure 6-1, type "2" and then press "ENTER" to select the MMT Installation option.**

**Note:** The MMT - Command Menus option is reserved for troubleshooting activities.

```
+---------------------------V4.0A MMT Radio Responses---------------------------+
|                                Proprietary Software                          |
|                        MagnaStar MMT Version 4.0A                            |
|                             INSTALLER VERSION                                |
|                (C) Copyright 1994 Raytheon Systems Company                   |
| TNT DOS-Extender (C) Copyright 1986-1994 Phar Lap Software, Inc. SN DE1-9503 |
|            =====>           Attach Serial Cable          <=====             |
|                                                                              |
+------------------------------------------------------------------------------+
+-----------------------------MMT Menu Prompts-----------------------------+
|                    C-2000  MMT  STARTUP  OPTION  MENU                      |
|                                                                            |
|  1 - Start MMT - Command Menus (ARTU or CDBI)                              |
|  2 - Start MMT - Installation                                              |
| ---------------------------------------------------                        |
| Select MMT start-up option (1 - 2, Q to quit MMT): _                       |
|                                                                            |
|                                                                            |
+------------------------------------------------------------------------------+
```

Figure 6-1. MMT Installer display screen #1.

### 6.3.5 INTRODUCTION TO THE MMT INSTALLATION TUTORIAL

An introduction to the MMT Installation tutorial will be displayed on the MMT as shown in Figure 6-2. This screen provides information on the instructions necessary to move from one test step to another within the installation procedure. After reading the introduction, continue with the installation as follows:

**Type "C" to go to the next screen.**

```
+-------------------------------V4.0A MMT Radio Responses-----------------------+
|                                                                                |
|                                                                                |
|                                                                                |
+--------------------------------------------------------------------------------+
+-------------------------------V1A MMT Tutorial--------------------------------+
|INS1A101              MMT  MAGNASTAR  INSTALLATION                              |
|                                                                                |
|  This tutorial is conducted step-by-step with information presented in this   |
|  'MMT Tutorial' window, instructing you what actions to take to accomplish     |
|  the objective of the step and what results to expect (measurements to take,   |
|  displays to observe, etc.).  The MMT operations will be automated for you.    |
|                                                                                |
|  After each step, you may choose one of the following options at the prompt:   |
|                                                                                |
|    'C'ontinue       - Step completed, ready for the next installation step     |
|    'T'roubleshoot   - Direct me to troubleshooting information for this step  |
|    'R'epeat         - Let's try this step again                                |
|    'Q'uit           - I'm finished, quit the MMT installation                  |
|                 (C)ontinue, (T)roubleshoot, (R)epeat, (Q)uit: _                |
+--------------------------------------------------------------------------------+
```

Figure 6-2. MMT Installer display screen #2.

### 6.3.6 C-2000 SYSTEM POWER UP

This step will apply aircraft power to the C-2000 system. The installer should view the indicators on the front of the ARTU to verify proper operation.

**Verify that the MMT display screen is as shown in Figure 6-3.**

**Apply aircraft power to the ARTU.**

**Note:** insure that power has been removed from the unit for greater that ten seconds prior to power up if the unit has been previously had power applied.

**Observe the condition of the two indicators on the front of the ARTU.**

**The FAULT indicator should be "Off" (not illuminated).**

**The POWER indicator should be "On" (illuminated green).**

**If the condition of the two indicators is correct, type "C" to continue the installation.**

**If the condition of the two indicators is not correct, proceed to troubleshooting procedures (Section 9).**

```
+-------------------------------V4.0A MMT Radio Responses-----------------------+
|                                                                                |
|                                                                                |
|                                                                                |
+--------------------------------------------------------------------------------+
+-------------------------------V1A MMT Tutorial--------------------------------+
|INS1A102                    MMT  MAGNASTAR  INSTALLATION                        |
|OBJECTIVE:                                                                      |
|  Power-up the ARTU.                                                            |
|                                                                                |
|EXPECTED RESULTS:                                                               |
|  Power indicator on front of ARTU is illuminated (green).                      |
|                                                                                |
|ACTIONS:                                                                        |
|  o Apply power to ARTU.                                                        |
|  o Observe power indicator is illuminated (green).                             |


|                (C)ontinue, (T)roubleshoot, (R)epeat, (Q)uit: _                |
+--------------------------------------------------------------------------------+
```

Figure 6-3. MMT Installer display screen #3.

### 6.3.7 MMT COMMUNICATION VERIFICATION

This step will verify that the MMT is properly communicating with the ARTU. View the data in the MMT Radio Responses display window. The MMT display screen will be similar to that shown in Figure 6-4.

**Observe that the MMT display screen is similar to that shown in Figure 6-4.**

**Verify that the MMT Radio Responses screen displays the ARTU software file names.**

(**Note**: the actual version numbers of the software loaded in the ARTU will be displayed on the MMT in place of the # characters shown in the window below. A letter will replace the X.)

**If the MMT Radio Responses window displays the software file names, type "C" to continue the MMT installation.**

```
+-----------------------------V4.0A MMT Radio Responses-----------------------+
|                                                                              |
|Power-up Status:  80376 Microprocessor OK, SRAM OK.                          |
|   ARTC code File ARTCC##X.HEX Ver #.#  Date ##/##/## ##:##  Bank # CRC:####  |
|   DSP  code File MDSPC##X.HEX Ver #.#  Date ##/##/## ##:##  Bank # CRC:####  |
|   BIT  code File MBITC##X.HEX Ver #.#  Date ##/##/## ##:##  Bank # CRC:####  |
|   Boot code File M_BTC##X.HEX Ver #.#  Date ##/##/## ##:##  Bank # CRC:####  |
|Radio software is not executing                                               |
+------------------------------------------------------------------------------+
+-----------------------------V1A MMT Tutorial--------------------------------+
|INS1A103                 MMT  MAGNASTAR  INSTALLATION                         |
|OBJECTIVE:                                                                    |
|  Verify that the ARTU is communicating properly with the MMT.                |
|                                                                              |
|EXPECTED RESULTS:                                                             |
|  ARTU's software filenames are displayed in the MMT Radio Responses window:  |
|                                                                              |
|  "ARTC code File ARTCC##X.HEX Ver #.#  Date ##/##/## ##:##  Bank # CRC:####"  |
|  "DSP  code File MDSPC##X.HEX Ver #.#  Date ##/##/## ##:##  Bank # CRC:####"  |
|                                                                              |
|ACTIONS:                                                                      |
|  o Observe software filenames displayed in MMT Radio Responses window.       |
|                                                                              |
|                (C)ontinue, (T)roubleshoot, (R)epeat, (Q)uit: _               |
+------------------------------------------------------------------------------+
```

Figure 6-4. MMT Installer display screen #4.

### 6.3.8 START ARTU OPERATIONAL SOFTWARE

In the following steps, the installer will start the execution of the ARTU operational software and verify successful completion of Power-up Built-In-Test (BIT). Operation of the Power-up BIT is verified by observing the status of the ARTU FAULT indicator and viewing the results in the MMT Radio Responses window.

Type "C" to start ARTU operational software. Once the command is given to start the operational software, Power-up BIT will begin execution.

**Note**: The time to complete Power-up BIT may vary from one to five minutes depending on the amount of time the ARTU frequency reference requires to warm-up.

**Observe that the MMT display screen is similar to that shown in Figure 6-5.**

```
+------------------------------ V4.0A MMT Radio Responses-----------------------+
|                                                                                |
|Power-up Status:  80376 Microprocessor OK, SRAM OK.                            |
|   ARTC code File ARTCC##X.HEX Ver #.#  Date ##/##/## ##:##  Bank # CRC:####    |
|   DSP  code File MDSPC##X.HEX Ver #.#  Date ##/##/## ##:##  Bank # CRC:####    |
|   BIT  code File MBITC##X.HEX Ver #.#  Date ##/##/## ##:##  Bank # CRC:####    |
|   Boot code File M_BTC##X.HEX Ver #.#  Date ##/##/## ##:##  Bank # CRC:####    |
|Radio software is not executing                                                 |
|                                                                                |
+--------------------------------------------------------------------------------+
+------------------------------V1A MMT Tutorial--------------------------------+
|INS1A104                 MMT  MAGNASTAR  INSTALLATION                           |
|OBJECTIVE:                                                                      |
|  Verify that power-up Built-In Test (BIT) begins execution.                    |
|                                                                                |
|EXPECTED RESULTS:                                                               |
|  Fault indicator on front of ARTU is illuminated (red).                        |
|  Power-up BIT result messages are displayed in MMT Radio Responses window.     |
|                                                                                |
|ACTIONS:                                                                        |
|  o Press 'C'ontinue to begin power-up BIT execution.                           |
|                                                                                |
|                 (C)ontinue, (T)roubleshoot, (R)epeat, (Q)uit: _                |
+--------------------------------------------------------------------------------+
```

Figure 6-5. MMT Installer display screen #5.

Type "C" to start ARTU operational software.

Observe that the MMT display screen is now similar to that shown in Figure 6-6.

Observe that the FAULT indicator should be "On" (illuminated red) indicating that Power-up BIT has started.

Next observe that the MMT Radio Responses window display is similar to that shown in Figure 6-6 for approximately 10-15 seconds after the start of Power-up BIT.

After approximately a 10-15 second delay, the MMT Radio Responses window will display the various BIT tests and a pass/fail status as each test is completed.

After approximately 30 seconds, Power-up BIT may appear to stop running. During this time period the ARTU software is waiting for the frequency reference to warm-up. This warm-up time may vary from 1 to 5 minutes (at room temperature). After the frequency reference has warmed-up, several more BIT tests will then be completed.

```
+---------------------------- V4.0A MMT Radio Responses-----------------------+
|                                                                              |
|                 WAITING FOR POWER-UP BIT RESULTS (<5 MINUTE DELAY)           |
|                            Press 'Esc' to Terminate Wait                     |
| Radio software starting execution.                                           |
| The MMT has been reconfigured for COM Port 1 at 9.6 kbs.                     |
|                                                                              |
+------------------------------------------------------------------------------+
+------------------------------V1A MMT Tutorial------------------------------+
|INS1A105            MMT  MAGNASTAR  C-2000  INSTALLATION                      |
|OBJECTIVE:                                                                    |
|  Verify that power-up Built-In Test (BIT) completes successfully.            |
|                                                                              |
|EXPECTED RESULTS:                                                             |
|  Fault indicator on front of ARTU is extinguished (off).                     |
|  Summary Power-up BIT result message is displayed in MMT Responses window:   |
|    "C-2000 POWER-UP BIT Passed"                                              |
|                                                                              |
|ACTIONS:                                                                      |
|  o Wait for power-up BIT to complete (may take up to five minutes).          |
|  o Observe fault indicator light is extinguished (off).                      |
|  o Observe summary power-up BIT result message indicates passed.             |
|                      (C)ontinue, (T)roubleshoot, (Q)uit: _                   |
+------------------------------------------------------------------------------+
```

Figure 6-6. MMT Installer display screen #6.

**The installer should observe two indications that Power-up BIT testing has successfully been completed:**

**First, the MMT Radio Responses window will display "C-2000 Power-up BIT Passed", as shown in Figure 6-7.**

**Second, the installer is to observe the FAULT indicator. The FAULT indicator should be "Off" (not illuminated).**

**After successful completion of Power-up BIT, type "C" to continue the MMT installation.**

**If the ARTU does not successfully pass Power-up BIT, proceed to Troubleshooting Procedures (Section 9).**

```
+------------------------------ V4.0A MMT Radio Responses----------------------+
| BIT Test POWER-UP BIT                Passed, Fault: 00 00 00 00                |
|                                                                                |
|                 C-2000 POWER-UP BIT Passed                                     |
|        Select 0 from Commanded BIT Menu to View BIT Results                    |
|                                                                                |
| Radio software executing in unlocked online state.                             |
+--------------------------------------------------------------------------------+
+--------------------------------V1A MMT Tutorial------------------------------+
|INS1A105            MMT  MAGNASTAR  C-2000  INSTALLATION                        |
|OBJECTIVE:                                                                      |
|  Verify that power-up Built-In Test (BIT) completes successfully.              |
|                                                                                |
|EXPECTED RESULTS:                                                               |
|  Fault indicator on front of ARTU is extinguished (off).                       |
|  Summary Power-up BIT result message is displayed in MMT Responses window:     |
|    "C-2000 POWER-UP BIT Passed"                                                |
|                                                                                |
|ACTIONS:                                                                        |
|  o Wait for power-up BIT to complete (may take up to five minutes).            |
|  o Observe fault indicator light is extinguished (off).                        |
|  o Observe summary power-up BIT result message indicates passed.               |
|                     (C)ontinue, (T)roubleshoot, (Q)uit: _                      |
+--------------------------------------------------------------------------------+
```

Figure 6-7. MMT Installer display screen #7.

### 6.3.9 LOCKED OFF-LINE STATE

After successful completion of Power-up BIT, the ARTU is to be placed into a locked Off-line state by the MMT software. This mode of operation will allow the installer to control and test selected **ARTU** functions that cannot be easily tested in a normal operational mode.

**The MMT display screen should be as shown in Figure 6-8.**

**Verify that the ARTU is in a Locked Off-line state by observing the MMT Radio Responses window for the "Radio software executing in locked offline state" message.**

**Type "C" to continue.**

```
+----------------------------- V4.0A MMT Radio Responses-----------------------+
|                                                                              |
| Radio software executing in locked offline state.                            |
|                                                                              |
|                                                                              |
|                                                                              |
+------------------------------------------------------------------------------+
+------------------------------V1A MMT Tutorial-------------------------------+
|INS1A106                 MMT  MAGNASTAR  INSTALLATION                         |
|OBJECTIVE:                                                                    |
|  Verify that ARTU was put into locked/offline state.                         |
|                                                                              |
|EXPECTED RESULTS:                                                             |
|  Following message displayed in MMT Radio Responses window:                  |
|    "Radio software executing in locked offline state."                       |
|                                                                              |
|ACTIONS:                                                                      |
|  o Observe above message in MMT Radio Responses window.                      |
|                                                                              |
|                                                                              |
|                (C)ontinue, (T)roubleshoot, (R)epeat, (Q)uit: _               |
+------------------------------------------------------------------------------+
```

Figure 6-8. MMT Installer display screen #8.

### 6.3.10 ARTU MOUNTING TRAY FAN TEST

This step will verify that the ARTU Mounting Tray fan is functional.

**The MMT display screen shall be as shown in Figure 6-9.**

**Verify that the ARTU Mounting Tray fan is operating.**

**Observe that the Mounting Tray fan exit airflow is not restricted or blocked.**

**Type "C" to continue.**

```
+---------------------------- V4.0A MMT Radio Responses-----------------------+
|
| C-2000 reports engineering test FAN CONTROL performed.
|
|
|
+-----------------------------------------------------------------------------+
+------------------------------V1A MMT Tutorial-------------------------------+
|INS1A107                 MMT  MAGNASTAR  INSTALLATION
|OBJECTIVE:
|  Verify that ARTU's Mounting Tray Fan operates properly.
|
|EXPECTED RESULTS:
|  ARTU Mounting Tray Fan operates.
|  Airflow out of back of ARTU Mounting Tray is not restricted.
|
|ACTIONS:
|  o Observe that ARTU Mounting Tray Fan is operating.
|  o Observe that airflow is not restricted out of back of Mounting Tray.
|
|
|                (C)ontinue, (T)roubleshoot, (R)epeat, (Q)uit: _
+-----------------------------------------------------------------------------+
```

Figure 6-9. MMT Installer display screen #9.

### 6.3.11 ARTU TRANSMITTER POWER OUTPUT MEASUREMENT

These test steps will measure the ARTU transmitter power level at the Antenna port of the Duplexer. The installer will be required to disconnect the Antenna coaxial cable from the Antenna port of the Duplexer and insert a power meter or thru-line watt meter between this port and the antenna. Be sure to have either a 50 ohm RF load or antenna connected to the thru-line watt meter. The ARTU will then be commanded to transmit a CW carrier for measurement. It is very important that the installer properly protect the test equipment from damage by the ARTU transmitter output which can have an average power level as high as +42 dBm (16 watts). After the power measurement is completed, the ARTU will be commanded to stop transmitting and the Antenna coaxial cable is to be reconnected.

**The MMT display screen should be as shown in Figure 6-10.**

**The installer is to disconnect the Antenna coaxial cable from the Antenna port of the Duplexer. A Power Meter is to then to be connected to the Antenna port of the Duplexer. If a thru-line watt meter is used, be sure to reconnect the antenna to the output terminal of the thru-line.**

**CAUTION: PRESSING "C" WILL MAKE THE ARTU TRANSMIT. THIS PRESENTS A RADIATION HAZARD FOR PERSONNEL WITHIN 5 FOOT OF THE ANTENNA. ENSURE THAT THE LOOP-AROUND TEST SET IS SET UP AND CONNECTED PRIOR TO INITIATING THE TEST SEQUENCE.** The Power Meter, with or without padding, shall be capable of withstanding average power levels as high as +42 dBm (16 watts) without damage.

**Once the Power Meter is connected to the Duplexer, the installer is ready to command the ARTU to transmit. Type "C" to command the ARTU to start transmitting.**

**Note:** Execution of this command may take from ten to thirty seconds to complete during which time the MMT may appear to be stopped or several command screens may appear to flash by and momentarily stop before the test is configured in the MMT.

```
+---------------------------- V4.0A MMT Radio Responses-----------------------+
|                                                                              |
| C-2000 reports engineering test FAN CONTROL performed.                       |
|                                                                              |
+------------------------------------------------------------------------------+
+------------------------------V1A MMT Tutorial------------------------------+
|INS1A108                 MMT  MAGNASTAR  INSTALLATION                         |
|OBJECTIVE:                                                                    |
|  Prepare to measure ARTU's output power on power meter.                      |
|                                                                              |
|EXPECTED RESULTS:                                                             |
|  Power meter connected to duplexer in preparation to measure power output.   |
|                                                                              |
|ACTIONS:                                                                      |
|  o Disconnect antenna cable from duplexer.                                   |
|  o Connect RF power meter to duplexer.                                       |
|                                                                              |
|  Note: Pressing 'C'ontinue now will cause the radio to begin transmitting.   |
|                                                                              |
|                (C)ontinue, (T)roubleshoot, (R)epeat, (Q)uit: _               |
+------------------------------------------------------------------------------+
```

Figure 6-10. MMT Installer display screen #10.

The MMT display screen shall be as shown in Figure 6-11.

Observe the ARTU transmitter output power at the Antenna port of the Duplexer using the Power Meter. This level shall be greater than +36 dBm (4 watts).

```
+---------------------------- V4.0A MMT Radio Responses-----------------------+
|                                                                              |
|   C-2000 reports engineering test TUNE SYNTHESIZER performed.                |
|                                                                              |
|                                                                              |
+------------------------------------------------------------------------------+
+------------------------------V1A MMT Tutorial------------------------------+
|INS1A109                 MMT  MAGNASTAR  INSTALLATION                         |
|OBJECTIVE:                                                                    |
|  Verify power output of ARTU.                                                |
|                                                                              |
|EXPECTED RESULTS:                                                             |
|  Power meter reading should be greater than +36 dBm (4 Watts).               |
|                                                                              |
|ACTIONS:                                                                      |
|  o Observe power meter reading to be as expected.                            |
|                                                                              |
|                                                                              |
|                (C)ontinue, (T)roubleshoot, (R)epeat, (Q)uit: _               |
+------------------------------------------------------------------------------+
```

Figure 6-11. MMT Installer display screen #11

Type "C" to command the ARTU to stop transmitting.

The MMT display screen should now be as shown in Figure 6-12.

Reconnect the Antenna coaxial cable to the Antenna port of the Duplexer.

```
+---------------------------- V4.0A MMT Radio Responses-----------------------+
|                                                                              |
| C-2000 reports engineering test STOP TRANSMIT performed.                     |
|                                                                              |
|                                                                              |
|                                                                              |
+------------------------------------------------------------------------------+
+------------------------------V1A MMT Tutorial------------------------------+
|INS1A110                 MMT  MAGNASTAR  INSTALLATION                         |
|OBJECTIVE:                                                                    |
|  Verify ARTU has stopped transmitting.                                       |
|                                                                              |
|EXPECTED RESULTS:                                                             |
|  Power meter reading should indicate no transmit signal present.             |
|                                                                              |
|ACTIONS:                                                                      |
|  o Observe power meter reading to be as expected.                            |
|  o Disconnect power meter from duplexer.                                     |
|  o Connect antenna cable to duplexer.                                        |
|                                                                              |
|                (C)ontinue, (T)roubleshoot, (R)epeat, (Q)uit: _               |
+------------------------------------------------------------------------------+
```

Figure 6-12. MMT Installer display screen #12.

### 6.3.12 RECEIVE SIGNAL STRENGTH MEASUREMENT

This step will use the ARTU to measure the Receive Signal Strength (RSS) of the C-2000 system in an RF loop-around configuration using the MagnaStar Loop-Around Test Set. This test will verify the performance of the aircraft RF interface between the ARTU and the Antenna.

In this test, the ARTU will transmit a QAM signal at frequency of 894.9495 MHz. This signal will be frequency translated (i.e. mixed) by 45 MHz to a frequency of 849.9495 MHz and transmitted back to the ARTU via the MagnaStar Loop-Around Test Set. Both the TSC and Pilot receivers are tuned to the receive frequency. The installer is to the view the RSS value of the loop-around signal to verify the RF signal path of the C-2000 system.

The following steps are to be used with the MagnaStar Loop-Around Test Set.

**Type "C" to begin the Receive Signal Strength test step. The MMT display screen should be as shown in Figure 6-13.**

**Turn "ON" the Loop-Around Test Set.**

**Measure that the MagnaStar Loop-Around Test Set battery voltage is greater than 6.0 volts DC by pressing the battery check switch. If the Battery check LED illuminated, then the battery is within tolerance. Otherwise replace the battery.**

**Carefully place the clip-on antenna test fixture (at one end of the MagnaStar Loop-Around Test Set cable) onto the center of the MagnaStar antenna. Centerng of the clip-on antenna onto the aircraft antenna is necessary for best results.**

**Set the attenuator on the Test Set for 30 dB attenuation. (Attenuation switched "On".)**

```
+---------------------------- V4.0A MMT Radio Responses-----------------------+
|                                                                              |
|                                                                              |
|                                                                              |
|                                                                              |
+------------------------------------------------------------------------------+
+-----------------------------V1A MMT Tutorial-------------------------------+
|INS1A200            MMT  MAGNASTAR  C-2000  INSTALLATION                      |
|OBJECTIVE:                                                                    |
|  Prepare to measure system receive signal strength.                          |
|                                                                              |
|EXPECTED RESULTS:                                                             |
|  The MagnaStar loop around test box is to be connected to the aircraft       |
|  antenna in preparation to measure receive signal strength.                  |
|                                                                              |
|ACTIONS:                                                                      |
|  o Connect the MagnaStar loop around test box to the aircraft antenna.       |
|  o Set power and attenuator switch to the "ON" position.                     |
|                                                                              |
|  Note: Pressing 'C'ontinue now will cause the radio to begin transmitting.   |
|                (C)ontinue, (T)roubleshoot, (R)epeat, (Q)uit: _               |
+------------------------------------------------------------------------------+
```

Figure 6-13. MMT Installer display screen #13.

**Type "C" to start the ARTU transmitting a QAM signal for loop-around testing.**

**Note:** Execution of this command may take from ten to thirty seconds to complete during which time the MMT may appear to be stopped or several command screens may appear to flash by and momentarily stop before the test is configured in the MMT.

**CAUTION: THE ARTU IS NOW TRANSMITTING ABOUT 10 WATTS. THIS PRESENTS A RADIATION HAZARD FOR PERSONNEL WITHIN 5 FOOT OF THE ANTENNA. ENSURE THAT THE LOOP-AROUND TEST SET IS SET UP AND CONNECTED PRIOR TO INITIATING THE TEST SEQUENCE.**

**The MMT display screen should be as shown in Figure 6-14.**

**The installer will observe the RSS value for both the TSC receiver (TxRx) and the Pilot receiver (Rx) in the MMT Status Updates window as explained in the next step.**

```
+------------------------- V4.0A MMT Radio Responses-------------------------+
|
| C-2000 reports status update ENABLED.
|
|
|                         Press F2 to View Status Display
|
+----------------------------------------------------------------------------+
+------------------------------V1A MMT Tutorial------------------------------+
|INS1A201                 MMT  MAGNASTAR  INSTALLATION
|OBJECTIVE:
|  Verify Received Signal Strength (RSS) from TSC/Pilot Looparound.
|
|EXPECTED RESULTS:
|  RSS reported for TxRx and for Rx on the MMT Status Updates window are each
|  > -95 dBm (as shown below):
|   "                 TxRx  RBS TxRx       Rx"
|   "Assignment:    T06:25            MON  1"
|   "RSS (dbm):       - ##    0.0       - ##"
|
|ACTIONS:
|  o Press F2 to view RSS as above on MMT Status Updates window.
|                (C)ontinue, (T)roubleshoot, (R)epeat, (Q)uit: _
+----------------------------------------------------------------------------+
```

Figure 6-14. MMT Installer display screen #14.

**Press the "F2" function key once to view the MMT Status Updates window.**

**After pressing "F2" key, the MMT Status Updates window should be similar to the that shown in Figure 6-15.**

**Note the values of the RSS readings of the TxRx and Rx receivers. These values should be between -107 dBm and -99 dBm. (The RSS readings will vary dependent on the placement of Loop-Around Test Set clip-on antenna placement, cable losses and other system variables.)**

**Set the attenuator switch settings on the MagnaStar Loop-Around Test Set for 0 dB of attenuation. (Set the attenuator switch to "Off".)**

**View the RSS values on the MMT Status Update windows. These values should be approximately 30 dB higher than the values noted prior to the attenuator change.**

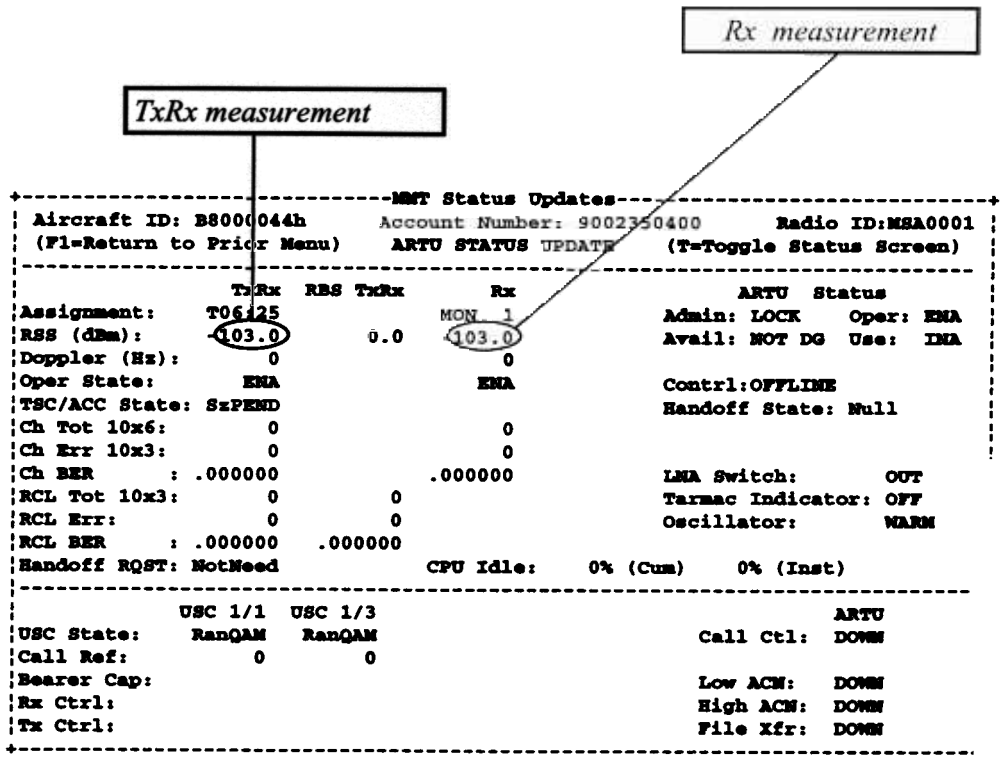


Figure 6-15. MMT Installer display screen #15.

**Press the "F1" function key once to return to the MMT installation menu. The MMT display screen will again be similar to that shown in Figure 6-14.**

**Next type "C" to proceed to the next step and to turn "Off" the ARTU transmitter.**

**Turn the MagnaStar Loop-Around Test Set "OFF" to conserve battery life.**

### 6.3.13 HANDSET / LAN TEST

This step will verify the number of CDBR/AIUs and Handsets that are connected to the ARTU. The installer is required to know the number of CDBR/AIUs and Handsets connected to the system so that these numbers may be compared to the value with which the ARTU is able to communicate. It should be noted that the Handset /LAN test will report an AIU as a CDBR.

**The MMT display screen will now be similar to that shown in Figure 6-16.**

**Note:** The MMT Radio Response window may require as long as 20 seconds to return with the a proper response.

**Compare the number of Handsets assigned as reported in the MMT Radio Responses window to the actual number of Handsets installed in the aircraft.**

**Compare the number of CDBR/AIUs present as reported in the MMT Radio Responses window to the actual number of CDBR/AIUs installed in the aircraft.**

**Note**: The Handset /LAN test will report an AIU as a CDBR. A CAS will not be reported as being present.

```
                                  MMT Radio Responses--------------------------+
|                                                                              |
| ENG Test ESTABLISH HANDSET LAN Results: PASS
|        TDM In Sync
|        2 Handsets Assigned
|        1 CDBRs Present
| C-2000 reports engineering test ESTABLISH HANDSET LAN performed.
|
+------------------------------------------------------------------------------+
+-------------------------------V1A MMT Tutorial-------------------------------+
|INS1A202              MMT  MAGNASTAR  C-2000  INSTALLATION                    |
|OBJECTIVE:                                                                    |
|  Verify number of connected CDBRs and Handsets.                              |
|                                                                              |
|EXPECTED RESULTS:                                                             |
|  Following message displayed in MMT Radio Responses window:                  |
|    "ENG Test ESTABLISH HANDSET LAN Results: PASS"                            |
|    "       TDM In Sync                          "                            |
|    "       # Handsets Assigned                  "                            |
|    "       # CDBRs Present                      "                            |
|ACTIONS:                                                                      |
|  o Wait at least 15 seconds for above response to be displayed.              |
|  o Verify correct number of connected CDBRs and Handsets reported.           |
|                (C)ontinue, (T)roubleshoot, (R)epeat, (Q)uit: _               |
+------------------------------------------------------------------------------+
```

Figure 6-16 MMT Installer display screen #16

### 6.3.14 RESET MAINTENANCE ACCESS PIN

This test step will reset the Maintenance Access Passcode, stored in the ARTU Non-Volatile memory, to the default value of (0000). This action is to insure that the installer knows the number to which the Maintenance Access Passcode has been set.

**The MMT display screen will be similar to that shown in Figure 6-17.**

**Verify that the MMT Radio Responses window displays the following message: "C-2000 reports engineering test RESET MAINTENANCE ACCESS PIN performed".**

**Type "C" to continue with this test step.**

```
+----------------------------- V4.0A MMT Radio Responses-----------------------+
|
|   C-2000 reports engineering test RESET MAINT ACCESS PIN performed.          |
|                                                                              |
|                                                                              |
|                                                                              |
|                                                                              |
|                                                                              |
+------------------------------------------------------------------------------+
+-------------------------------V1A MMT Tutorial-------------------------------+
|INS1A204                  MMT  MAGNASTAR  INSTALLATION                        |
|OBJECTIVE:                                                                    |
|  Verify that the Handset maintenance access PASSCODE is reported as reset.   |
|                                                                              |
|EXPECTED RESULTS:                                                             |
|  Following message displayed in MMT Radio Responses window:                  |
|    "C-2000 reports engineering test RESET MAINT ACCESS PIN performed."       |
|                                                                              |
|ACTIONS:                                                                      |
|  o Verify above message displayed in MMT Radio Responses window.             |
|                                                                              |
|  The maintenance access PASSCODE has now been set to the default value of   |
|  (0000).  The PASSCODE may be changed using the Handsets setup option.       |
|                (C)ontinue, (T)roubleshoot, (R)epeat, (Q)uit: _               |
+------------------------------------------------------------------------------+
```

Figure 6-17. MMT Installer display screen #17

### 6.3.15 UNLOCKED ONLINE STATE

This step will set the **ARTU** software executing in an unlocked online state. This command will change the C-2000 operation from a test mode to an operational mode to allow the installer to perform normal operational functions.

**The MMT display screen will be similar to that shown in Figure 6-18.**

**Verify that the MMT Radio Responses window displays the following message: "Radio software executing in unlocked online state".**

**Type "C" to continue with this test step.**

```
+---------------------------- V4.0A MMT Radio Responses-----------------------+
|                                                                              |
| Radio software executing in unlocked online state.                           |
|                                                                              |
|                                                                              |
+------------------------------------------------------------------------------+
+-----------------------------V1A MMT Tutorial-------------------------------+
|INS1A205                 MMT  MAGNASTAR  INSTALLATION                         |
|OBJECTIVE:                                                                    |
|  Verify that ARTU was put into unlocked/online state.                        |
|                                                                              |
|EXPECTED RESULTS:                                                             |
|  Following message displayed in MMT Radio Responses window:                  |
|    "Radio software executing in unlocked online state."                      |
|                                                                              |
|ACTIONS:                                                                      |
|  o Observe above message in MMT Radio Responses window.                      |
|                                                                              |
|                                                                              |
|                 (C)ontinue, (T)roubleshoot, (R)epeat, (Q)uit: _              |
+------------------------------------------------------------------------------+
```

Figure 6-18. MMT Installer display screen #18

### 6.3.16 RECEIVE SIGNAL STRENGTH MEASUREMENT USING GENSTAR GROUND STATION

This test step will verify the ability of the MagnaStar system to properly monitor a GTE AIRFONE GenStar™ system ground station. This step will use the ARTU to measure the Receive Signal Strength (RSS) of the Pilot signal from the GenStar™ system ground station. This test will verify the performance of the aircraft RF interface between the ARTU and the Antenna. (This measurement is a relative measurement because of the possible RF link variations between the C-2000 Antenna and the GenStar™ ground station). **This test is only valid if the test location will support an RF link with a GenStar™ system ground station.**

The installer is to view the MMT Status Updates window and verify that the ARTU has acquired and is monitoring the pilot signal from a nearby GenStar™ ground station. The MMT Status Updates window will indicate that the ARTU is monitoring a pilot signal by the presence of the "MON" indication in the "Assignment" row. This indication will be associated with only one of the ten possible subbands on which pilot signals may be present. If the "MON" indication is not present, then the ARTU has not acquired the signal from a ground station. In the column below the "MON" indication the installer will find the associated RSS value in units of dBm. A value between -50dBm and -105 dBm will allow the installer to establish normal communications with the GenStar™ ground station. However, values less than -105 dBm may not constitute a failure.

Because the ARTU is in a normal operational mode when this test is performed, the pilot receiver will periodically scan each of the ten different subbands searching for the best quality pilot signal from a ground station. For this reason the reported RSS value may change to a different value while the pilot receiver is scanning other subbands.

**The MMT display screen will be similar to that shown in Figure 6-19.**

```
                              V4.0A MMT Radio Responses-----------------------+
|
| C-2000 reports status update ENABLED
|
|
                         Press F2 to View Status Display
|                                                                             |
|                                                                             |
+-----------------------------------------------------------------------------+
+-------------------------------V1A MMT Tutorial-------------------------------+
|INS1A115              MMT  MAGNASTAR C-2000 INSTALLATION                     |
|OBJECTIVE:                                                                   |
|  Verify Received Signal Strength (RSS) from a GenStar ground station.       |
|                                                                             |
|EXPECTED RESULTS:                                                            |
|  ARTU operating in monitor mode on MMT Status Updates window as shown below:|
|   "Assignment      MON                                                     "|
|   "RSS (dBm)      ##.#  ##.#  ##.#  ##.#  ##.#  ##.#  ##.#  ##.#  ##.#  ##.#"|
|ACTIONS:                                                                     |
|  o Press F2 to view monitor status above on MMT Status Updates window.      |
|                                                                             |
| Note that one or more subbands may show RSS and that 'MON' will be shown   |
| as that subband's assignment when a suitable subband is located.           |
|                (C)ontinue, (T)roubleshoot, (R)epeat, (Q)uit: _              |
+-----------------------------------------------------------------------------+
```

Figure 6-19. MMT Installer display screen #19.

**Press the "F2" function key to view the MMT Status Updates window.**

**The MMT display screen will be similar to that shown in Figure 6-20.**

**The installer can verify that the ARTU is monitoring the ground station by the presence of a "MON" indication in the "Assignment" row of the MMT Status Updates window.**

**The installer is to verify that the RSS value of the received pilot signal is greater than -105 dBm (between -50dBm and -105 dBm ) in the column directly below the "MON" indication. It should be noted that a value less than -105 dBm may not constitute a failure.**

**Press the "F1" function key to return to the MMT Status Updates window.**

**Type "C" to go to the next step.**

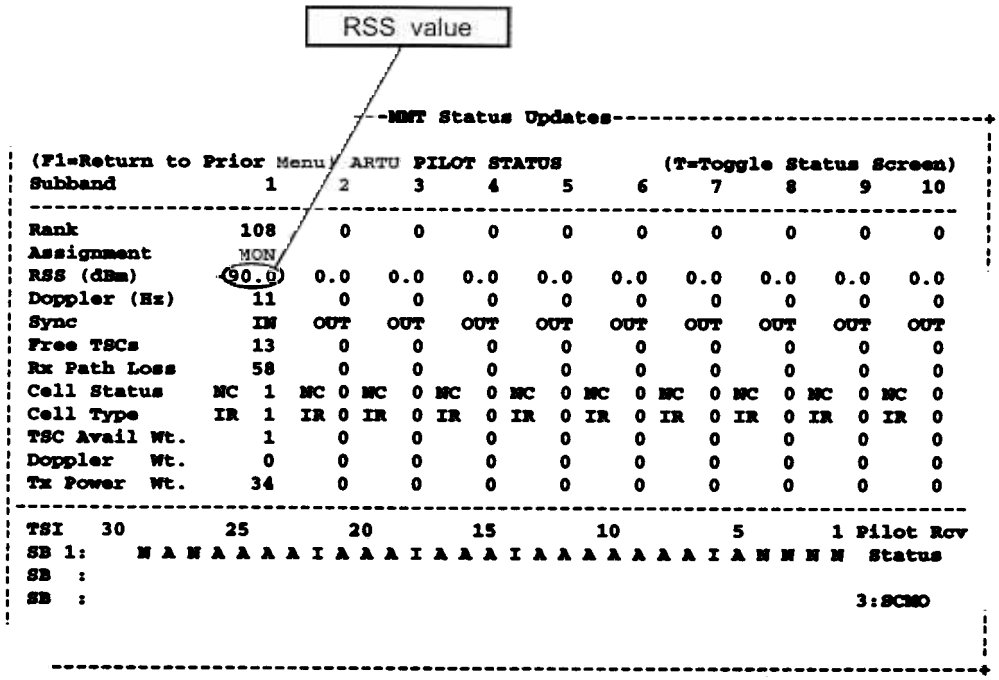


Figure 6-20. MMT Installer display screen #20.

### 6.3.17 C-2000 INSTALLATION CONCLUSION

The C-2000 Installation testing with the GTE Airfone GenStar™ Ground Station is finished at this point. Any further installation steps may not require MMT connection to the **ARTU**. If this is new installation, the next step is Handset Configuration (Section 7). This step concludes the MMT Installation by having the installer enter a command to quit the MMT Installation mode.

**Quitting the MMT**

To quit the MMT at this point, continue with the following steps:

**The MMT display screen will be similar to that shown in Figure 6-21.**

**Type "Q" to quit the MMT C-2000 Installation.**

**Note:** Turn "off" the MMT computer to conserve battery power.

**Disconnect the MMT cable from the ARTU.**

**Reconnect the MMT dust cover to the MMT connector.**

```
+---------------------------- V4.0A MMT Radio Responses-----------------------+
|                                                                              |
|                                                                              |
|                                                                              |
+------------------------------------------------------------------------------+
+------------------------------V1A MMT Tutorial-------------------------------+
|INS1A116            MMT  MAGNASTAR  C-2000  INSTALLATION                      |
|  This concludes the MMT C-2000 Installation.                                 |
|  To quit the MMT, press 'Q' at this time.                                    |
|  To re-execute the MMT Tutorial, press 'C' at this time.                     |
|                                                                              |
|                                                                              |
|                (C)ontinue, (T)roubleshoot, (R)epeat, (Q)uit: _               |
+------------------------------------------------------------------------------+
```

Figure 6-21. MMT Installer display screen #21

**Re-executing the MMT**

The MMT tutorial may be also be re-executed at this point. If the MMT is to be re-executed, power to the ARTU must be removed for greater than ten seconds.

**The MMT display screen will be similar to that shown in Figure 6-21**

**Remove power to the ARTU for greater than 20 seconds.**

**Type "C" to re-execute the MMT C-2000 Installation.**

## PROGRAMMING THE MAGNASTAR SYSTEM

7.0 PROGRAMMING THE MAGNASTAR SYSTEM ..... 7-1
7.1 HANDSET CONFIGURATION SCREENS 7-1
7.1.1 CONFIGURATION SCREEN FLOW CHART ..... 7-1
7.1.2 DETAILED CONFIGURATION SCREENS ..... 7-5
7.1.2.1 Services Screen ..... 7-5
7.1.2.2 Main Menu ..... 7-5
7.1.2.3 Checking Handset Setup Information Screens ..... 7-6
7.1.2.4 Starting a Maintenance Session ..... 7-6
7.1.2.5 Maintenance Screen #1 ..... 7-7
7.1.2.5.1 Changing the Passcode and Billing Mode ..... 7-7
7.1.2.5.2 Inplane Numbers ..... 7-8
7.1.2.5.3 Aircall Numbers ..... 7-9
7.1.2.5.3.1 Disabling a Handset From Ringing with an Aircraft Aircall Number ..... 7-10
7.1.2.5.3.2 Direct Call Pickup ..... 7-10
7.1.2.5.4 SATCOM Terminal ID's ..... 7-11
7.1.2.5.4.1 Disabling a Station From Ringing with a SATCOM Aircraft Terminal ID 7-11
7.1.2.5.5 Call Waiting ..... 7-12
7.1.2.5.6 Speed Dial ..... 7-12
7.1.2.5.7 AIU Configuration - SATCOM ..... 7-12
7.1.2.5.8 AIU Configuration - HF Radio ..... 7-13
7.1.2.6 Maintenance Screen #2 ..... 7-13
7.1.2.6.1 Station Setup ..... 7-15
7.1.2.6.2 Select Aero-H or Aero-I SATCOM Service ..... 7-15
7.1.2.6.3 Ringer Enable/Disable ..... 7-16
7.1.2.6.4 Dialing Plan ..... 7-16
7.1.2.6.5 Default Link and Auto Link Switch ..... 7-16
7.1.2.6.6 Service Availability and Call In Progress Indicators ..... 7-17
7.1.2.6.7 MODEM Settings ..... 7-18
7.1.2.6.8 Handset Attributes ..... 7-18
7.1.2.7.1 Handset Alerter and RJ-11 Gain Settings ..... 7-19
7.1.2.7.2 Auxiliary Call Alerter and Auxiliary Call Alerter Cadence ..... 7-19
7.1.2.7.3 Speaker Gain: ..... 7-20
7.1.2.7.4 LED Blink Rates ..... 7-20
7.1.2.7.5 Sidetone Gains ..... 7-21
7.1.2.7.6 Autodial DTMF Monitor ..... 7-21
7.1.2.7.7 Microphone TX Gain ..... 7-22
7.1.2.8 Aircall Screens ..... 7-23
7.1.2.8.1 Personal Aircall Number Register ..... 7-23
7.1.2.8.2 Viewing Stored Aircall Numbers (Messages) ..... 7-23
7.1.2.8.3 Viewing Programmed Aircall and SATCOM Terminal ID Numbers ..... 7-23
7.1.2.9 Remote Station Programming ..... 7-25
7.1.2.10 CDBR-2 Station Setup ..... 7-25
7.2 AIRCRAFT CONFIGURATION SHEET ..... 7-26