Decoder
Decoder.Sch

Scalar
Scalar.Sch

SVGA LCD
SVGA.Sch

MCU
MCU.Sch

Power
Power.Sch

CONFIDENTIAL

Size: B	Sheet of	Revision
File:	Drawn By:	

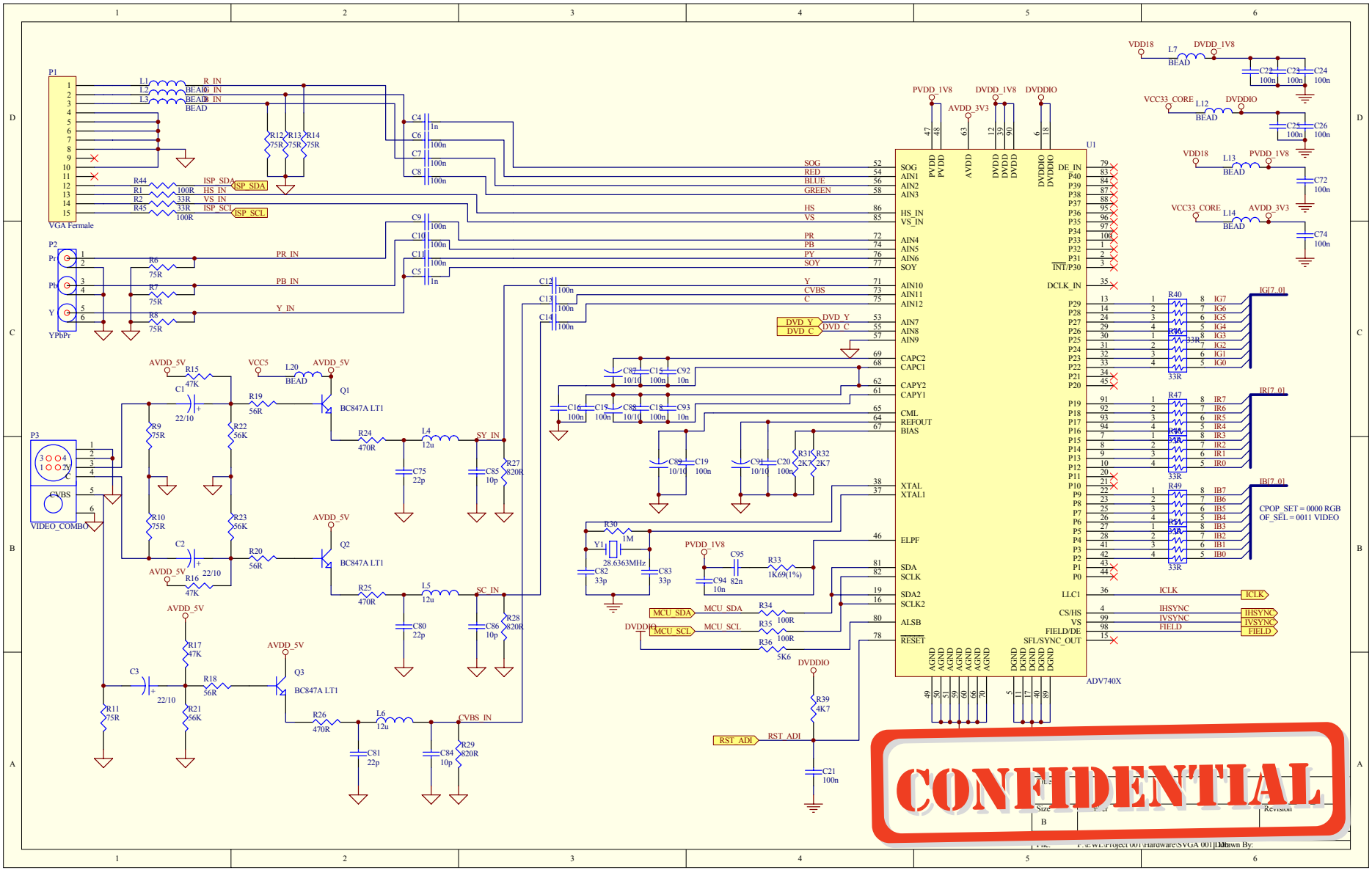
P1
VGA Female
R_IN
G_IN
B_IN
ISP_SDA
HS_IN
VS_IN
ISP_SCL
P2
YPbPr
PR_IN
PB_IN
Y_IN
P3
VIDEO_COMBO
CVBS
AVDD_5V
VCC5
Q1
Q2
Q3
BC847A LT1
SY_IN
SC_IN
CVBS_IN
U1
ADV740X
SOG
RED
BLUE
GREEN
HS
VS
PR
PB
PY
SOY
Y
CVBS
C
DVD_Y
DVD_C
CAPC2
CAPC1
CAPY2
CAPY1
CML
REFOUT
BIAS
XTAL
XTAL1
ELPF
SDA
SCLK
SDA2
SCLK2
ALSB
RESET
MCU_SDA
MCU_SCL
RST_ADI
DVDDIO
PVDD_1V8
AVDD_3V3
DVDD_1V8
VDD18
VCC33_CORE
DE_IN
DCLK_IN
INT/P30
LLC1
CS/HS
VS
FIELD/DE
SFL/SYNC_OUT
IG[7..0]
IR[7..0]
IB[7..0]
ICLK
IHSYNC
IVSYNC
FIELD
CPOP_SET = 0000 RGB
OF_SEL = 0011 VIDEO
CONFIDENTIAL

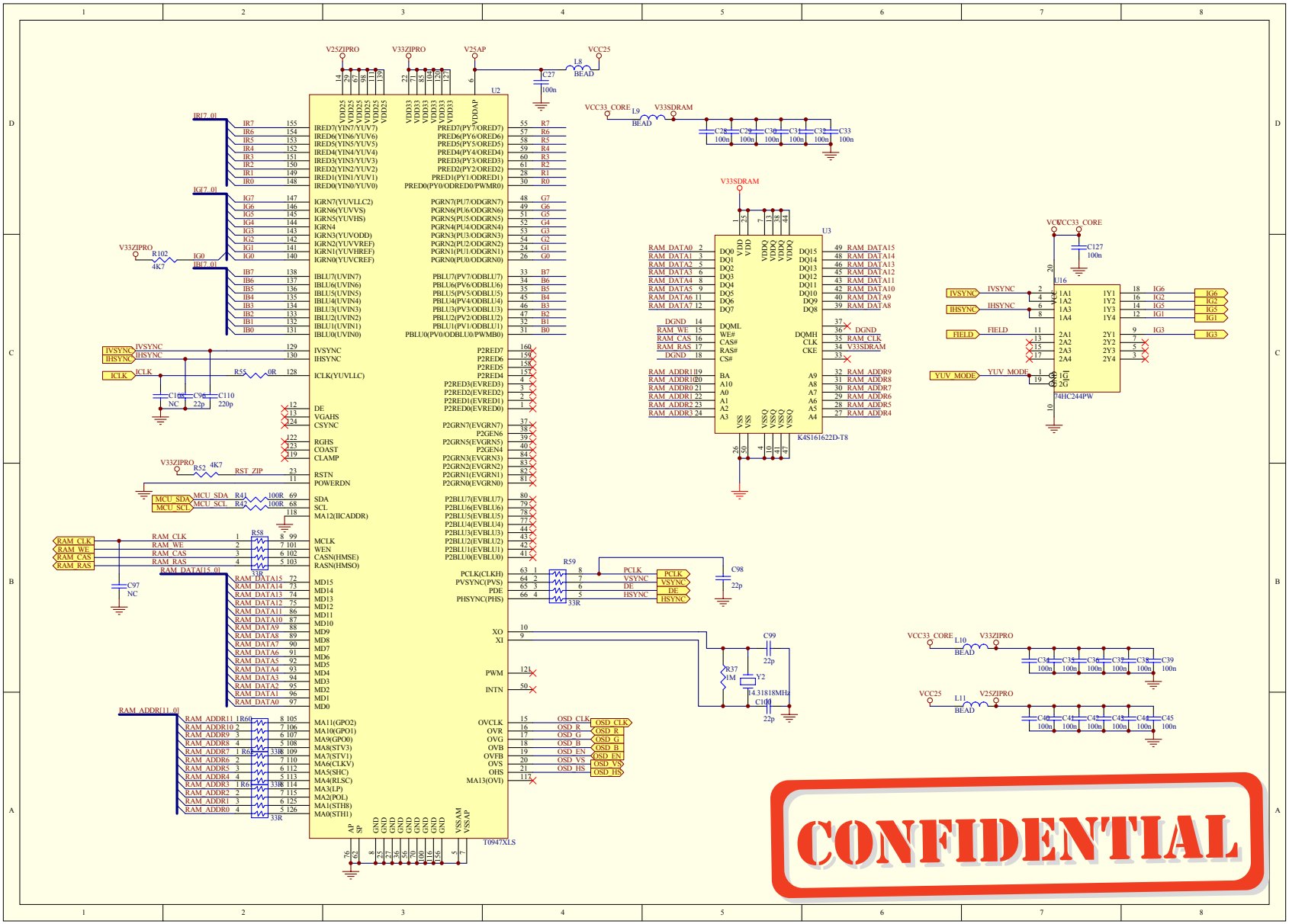
U2
T0947XLS
U3
K4S161622D-T8
U16
74HC244PW
V25ZIPRO
V33ZIPRO
V25AP
VCC25
VCC33_CORE
V33SDRAM
V33ZIPRO
IR[7..0]
IG[7..0]
IB[7..0]
IVSYNC
IHSYNC
ICLK
FIELD
YUV_MODE
MCU_SDA
MCU_SCL
RST_ZIP
RAM_CLK
RAM_WE
RAM_CAS
RAM_RAS
RAM_DATA[15..0]
RAM_ADDR[11..0]
PCLK
VSYNC
DE
HSYNC
OSD_CLK
OSD_R
OSD_G
OSD_B
OSD_EN
OSD_VS
OSD_HS
14.31818MHz
CONFIDENTIAL

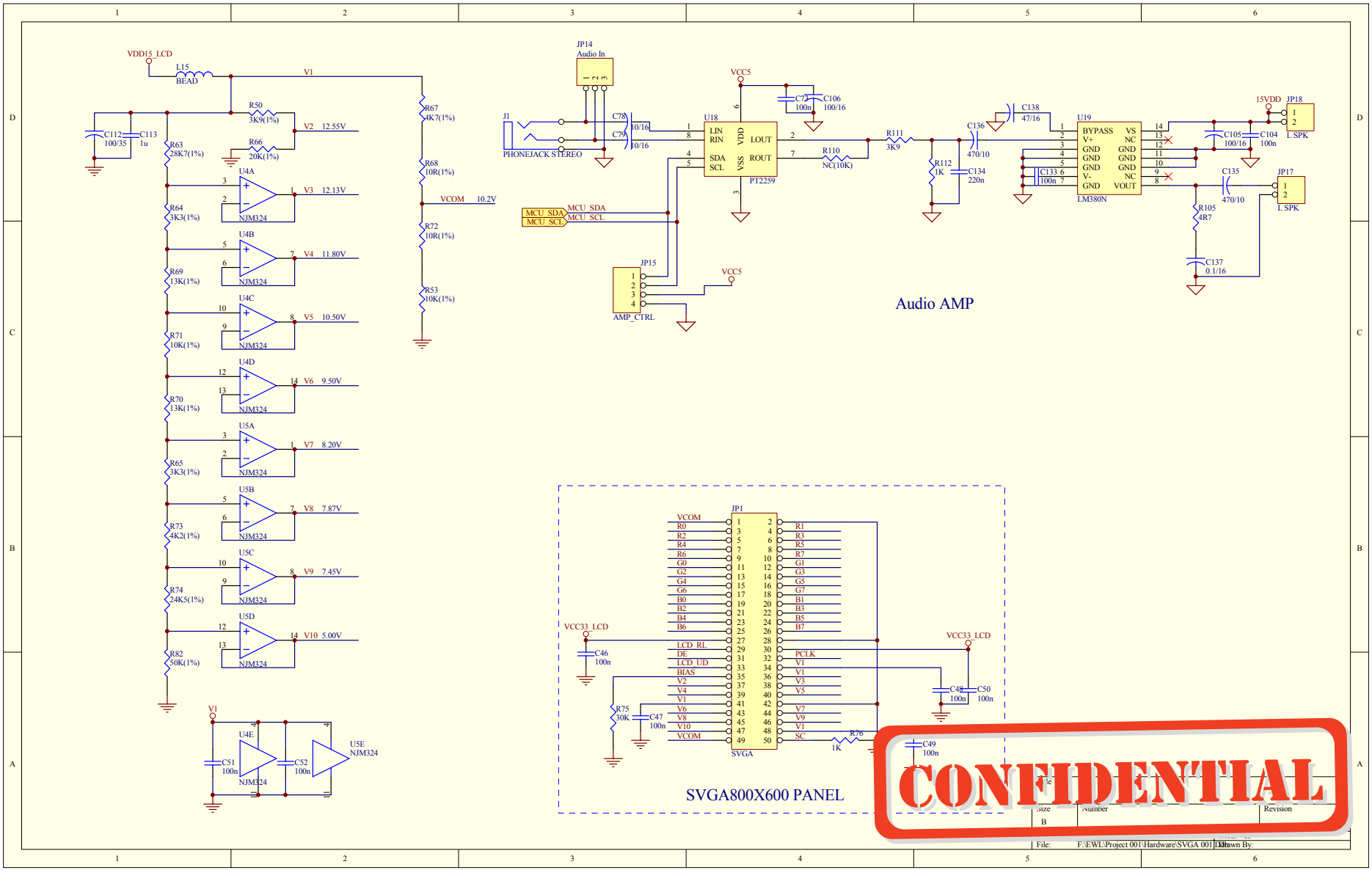
VDD15_LCD
L15
BEAD
V1
R50
3K9(1%)
V2 12.55V
R66
20K(1%)
C112
100/35
C113
1u
R63
28K7(1%)
R64
3K3(1%)
R69
13K(1%)
R71
10K(1%)
R70
13K(1%)
R65
3K3(1%)
R73
4K2(1%)
R74
24K5(1%)
R82
50K(1%)
U4A
NJM324
V3 12.13V
U4B
V4 11.80V
U4C
V5 10.50V
U4D
V6 9.50V
U5A
V7 8.20V
U5B
V8 7.87V
U5C
V9 7.45V
U5D
V10 5.00V
R67
4K7(1%)
R68
10R(1%)
VCOM 10.2V
R72
10R(1%)
R53
10K(1%)
U4E
U5E
C51
100n
C52
100n
JP14
Audio In
J1
PHONEJACK STEREO
C78
10/16
C79
10/16
U18
LIN
RIN
SDA
SCL
VDD
VSS
LOUT
ROUT
PT2259
VCC5
C72
100n
C106
100/16
R111
3K9
R110
NC(10K)
R112
1K
C134
220n
C136
470/10
C138
47/16
MCU_SDA
MCU_SCL
JP15
AMP_CTRL
U19
BYPASS
V+
GND
V-
VS
NC
VOUT
LM380N
C133
100n
15VDD
JP18
L SPK
C105
100/16
C104
100n
C135
470/10
JP17
R105
4R7
C137
0.1/16
Audio AMP
JP1
VCOM
R0
R2
R4
R6
G0
G2
G4
G6
B0
B2
B4
B6
LCD_RL
DE
LCD_UD
BIAS
V2
V4
V1
V6
V8
V10
VCOM
R1
R3
R5
R7
G1
G3
G5
G7
B1
B3
B5
B7
PCLK
V1
V3
V5
V7
V9
V1
SC
SVGA
VCC33_LCD
C46
100n
R75
30K
C47
100n
R76
1K
C48
100n
C50
100n
C49
100n
SVGA800X600 PANEL
CONFIDENTIAL
Size
B
Number
Revision
File:
F:\EWL\Project 001\Hardware\SVGA 001.Ddb
Drawn By:

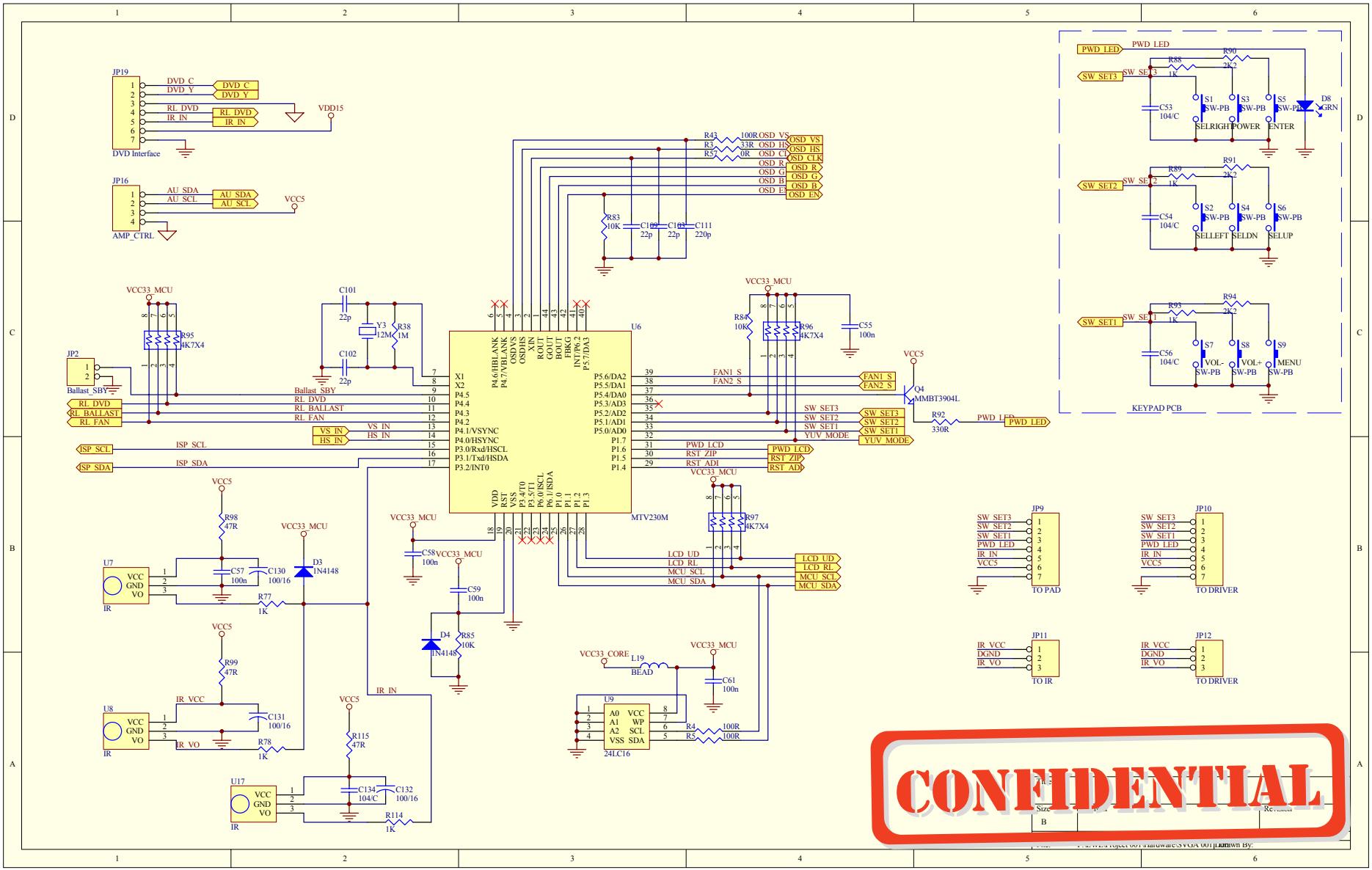
JP19
DVD Interface
DVD_C
DVD_Y
RL_DVD
IR_IN
VDD15
JP16
AMP_CTRL
AU_SDA
AU_SCL
VCC5
U6
MTV230M
VCC33_MCU
JP2
Ballast_SBY
RL_BALLAST
RL_FAN
VS_IN
HS_IN
ISP_SCL
ISP_SDA
OSD_VS
OSD_HS
OSD_CLK
OSD_R
OSD_G
OSD_B
OSD_EN
FAN1_S
FAN2_S
SW_SET3
SW_SET2
SW_SET1
YUV_MODE
PWD_LCD
RST_ZIP
RST_ADI
LCD_UD
LCD_RL
MCU_SCL
MCU_SDA
PWD_LED
Q4
MMBT3904L
KEYPAD PCB
SELRIGHT
POWER
ENTER
SELLEFT
SELDN
SELUP
VOL-
VOL+
MENU
U7
U8
U17
IR
D3
1N4148
D4
1N4148
U9
24LC16
L19
BEAD
IR_VCC
IR_VO
JP9
TO PAD
JP10
TO DRIVER
JP11
TO IR
JP12
TO DRIVER
CONFIDENTIAL

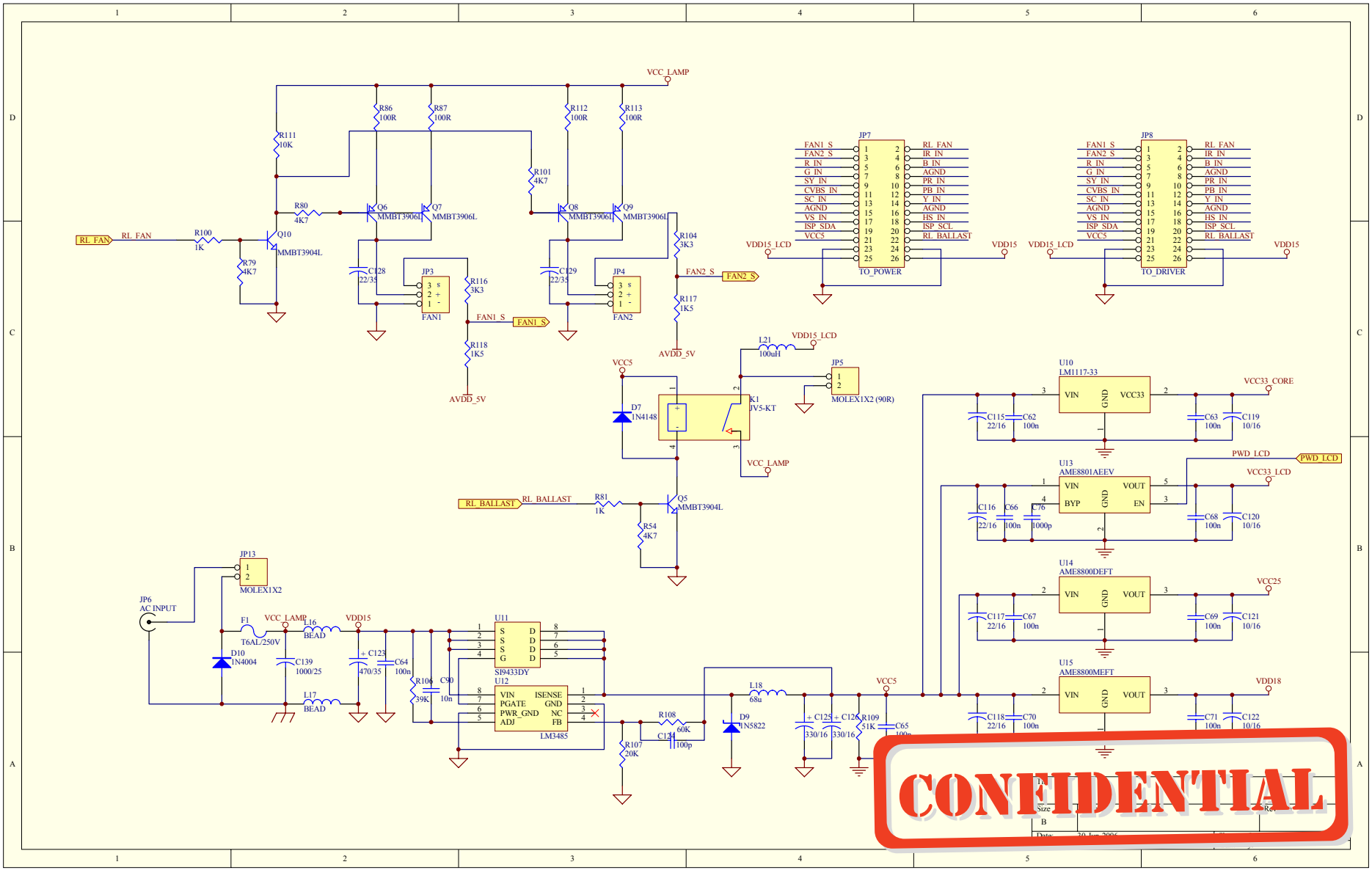
VCC_LAMP
R86 100R
R87 100R
R112 100R
R113 100R
R111 10K
R101 4K7
R80 4K7
Q6 MMBT3906L
Q7 MMBT3906L
Q8 MMBT3906L
Q9 MMBT3906L
RL_FAN
R100 1K
Q10 MMBT3904L
R79 4K7
C128 22/35
C129 22/35
JP3 FAN1
JP4 FAN2
R116 3K3
R118 1K5
FAN1_S
R104 3K3
R117 1K5
FAN2_S
AVDD_5V
JP7 TO_POWER
JP8 TO_DRIVER
FAN1_S
FAN2_S
R_IN
G_IN
SY_IN
CVBS_IN
SC_IN
AGND
VS_IN
ISP_SDA
VCC5
RL_FAN
IR_IN
B_IN
AGND
PR_IN
PB_IN
Y_IN
AGND
HS_IN
ISP_SCL
RL_BALLAST
VDD15_LCD
VDD15
L21 100uH
JP5 MOLEX1X2 (90R)
VCC5
D7 1N4148
K1 JV5-KT
VCC_LAMP
RL_BALLAST
R81 1K
Q5 MMBT3904L
R54 4K7
U10 LM1117-33
VIN
GND
VCC33
VCC33_CORE
C115 22/16
C62 100n
C63 100n
C119 10/16
U13 AME8801AEEV
VIN
VOUT
BYP
GND
EN
PWD_LCD
VCC33_LCD
C116 22/16
C66 100n
C76 1000p
C68 100n
C120 10/16
U14 AME8800DEFT
VIN
GND
VOUT
VCC25
C117 22/16
C67 100n
C69 100n
C121 10/16
U15 AME8800MEFT
VIN
GND
VOUT
VDD18
C118 22/16
C70 100n
C71 100n
C122 10/16
JP13 MOLEX1X2
JP6 AC INPUT
F1 T6AL/250V
D10 1N4004
C139 1000/25
L16 BEAD
L17 BEAD
VDD15
C123 470/35
C64 100n
R106 39K
C90 10n
U11 SI9433DY
S
D
G
U12 LM3485
VIN
ISENSE
PGATE
GND
PWR_GND
NC
ADJ
FB
R107 20K
R108 60K
C124 100p
L18 68u
D9 1N5822
C125 330/16
C126 330/16
R109 51K
C65 100n
CONFIDENTIAL