Dual-Band Radio Unit

Release 1.0
Issue 1.1, May 2021

User Guide

Contents

1	Overview			p. 16
2	RU Hardware Feature			p. 18
	2.1	RU Profile		p. 19
	2.2	RU Specifications		p. 20
		2.2.1	Environmental Specifications	p. 23
		2.2.2	Transport and Storage Requirements	p. 24
		2.2.3	Product Safety Specification	p. 24
		2.2.4	Electromagnetic Compatibility	p. 25
			Conducted Emission	p. 25
			Radiated Emission	p. 25
			Immunity Performance	p. 25
			Immunity Specification	p. 25
			Radiated Immunity	p. 26
			Electric Discharge	p. 26
			Fast Transients Common Mode	p. 26
			RF Common Mode	p. 27
			Resistability of Lightning	p. 27
	2.3	RU Downlink/Uplink Default Parameters		p. 28
	2.4	Antenna Configuration		p. 29
	2.5	Carrier Configuration		p. 31
	2.6	Functional Block Diagram		p. 53
	2.7	External Interface		p. 55
		2.7.1	RF Ports	p. 55
		2.7.2	Optical Port	p. 55
		2.7.3	DC Power and Ground Ports	p. 56
		2.7.4	RET Port	p. 57
		2.7.5	Debug/Test Port	p. 58
		2.7.6	Maintenance Interface	p. 58
	2.8	TX Control Function		p. 61
	2.9	Performance Requirement		p. 63
		2.9.1	eCPRI	p. 63
			Line Bit Rate	p. 63
			Selecting Recovery Clock	p. 63
			Counter	p. 64
			Optical Module	p. 64

	2.9.2	Radio Performance	p. 64
		General Specifications	p. 65
		Transmitter Specification	p. 66
		Receiver Specification	p. 74
	2.9.3	Power Supply	p. 78
		Electrical Specifications	p. 79
		DC Power Specification	p. 79
3	Ordering Information		p. 80
	3.1	Radio Unit	p. 81
	3.2	Mounting Kits	p. 82
	3.3	Accessories	p. 83
4	Installation		p. 84
	4.1	Unpack	p. 85
	4.2	Mounting	p. 86
	4.3	Installation Precautions	p. 92
	4.4	Returning of Defective Equipment	p. 94
	4.5	RU Installation	p. 95
	4.5.1	Installation Prerequisites	p. 95
	4.5.2	Attach L-Brackets and Eye Bolts	p. 96
	4.5.3	Attach RU Mounting Adapter Plate	p. 97
	4.5.4	Attach RU to Pole	p. 99
	4.5.5	Attach RU to Wall	p. 105
	4.6	Cable Installation	p. 112
	4.6.1	Connect Frame Ground Cable	p. 112
	4.6.2	Connect eCPRI Optical Cable	p. 114
	4.6.3	Connect AISG Cables	p. 120
	4.6.4	Connect RF Cables	p. 121
	4.6.5	Connect DC –48 V Power Cable	p. 123
5	Power Up		p. 126
	5.1	Check Connections and DC Power Polarity	p. 128
	5.2	Apply Power to RU	p. 129
	5.3	Check LED Status	p. 130
	5.4	LED Display	p. 131
	5.5	Verify Alarm Status	p. 133
	5.6	RU Confirmation	p. 134
6	Maintenance and Trouble Clearing		p. 135
	6.1	RU Alarms	p. 136
	6.2	Replace RU Mounted on Pole	p. 140
	6.3	Replace RU Mounted on Wall	p. 144

7	Removal		p. 150
	7.1	Cable Removal	p. 151
		7.1.1 Disconnect Power Cable	p. 151
		7.1.2 Remove RF Cables	p. 152
		7.1.3 Remove AISG Cable	p. 152
		7.1.4 Remove Optical Cable	p. 153
		7.1.5 Remove SFP Module	p. 154
		7.1.6 Detach Frame Ground Cable	p. 155
	7.2	Detach RU From Pole	p. 157
	7.3	Detach RU from Wall	p. 160
	7.4	Detach RU Mounting Adapter Plate	p. 164
	7.5	Remove L-Brackets and Eye Bolts	p. 166
A	References		p. 168
B	ZTP Overview		p. 170
C	Optical Connector Cleaning		p. 173
	C.1	LC End Surface Cleaning	p. 175
	C.2	End Surface Cleaning In LC	p. 177
D	Weatherproofing RU Connections		p. 178
E	Glossary		p. 179
Index			p. 182

About this Guide

Intended Audience: This user guide is intended for personnel responsible for installation and operations of this Dual-Band (n70 and n66) Radio Unit (RU).

This document contains hardware specifications, ordering information, and procedures for installing, removing, and maintaining the RU.

Contact Information

Knowledge Creation

For comments or suggestions about this documentation, contact us at:

Email: knowledge.creation@fujitsu.com

Product documentation is available on the Fujitsu *Partners* website, https://partners.fnc.fujitsu.com/documentation.

Technical Assistance Center

For technical assistance, contact the Fujitsu Technical Assistance Center (FTAC) at:

Phone: 1-800-USE-FTAC (1-800-873-3822)

Knowledge Delivery

For information about training services, contact Educational Services at:

Fujitsu Training Center
2801 Telecom Parkway
Richardson, Texas 75082

Phone: 1-972-479-4022

Training inquiries and requests, email: knowledge.delivery@fujitsu.com

Class registration through the Fujitsu *Partners* website: https://partners.fnc.fujitsu.com/training

Sales

This documentation is supplied as a service to our customers. For sales and general information, contact us at:

Phone: 1-800-777-FAST (1-800-777-3278)

Trademarks and Disclaimers

Trademarks

FUJITSU (and design)® and "shaping tomorrow with you" are trademarks of Fujitsu Limited in the United States and other countries. All Rights Reserved.

Torx®, is a registered trademark of Acument Intellectual Properties, LLC in the United States or other countries.

General Disclaimers

Note: All other products or services mentioned in this document are by the trademarks, service marks, or product names as designated by the companies that market those products or services or own those marks. Inquiries concerning such products, services, or marks should be made directly to those companies.

Fujitsu and Fujitsu Customer Use Only: This document and its contents are provided by Fujitsu Network Communications Inc. for guidance purposes only. This document is provided "as is" with no warranties or representations whatsoever, either express or implied, without notice, to make including without limitation the implied warranties of merchantability and for purpose. Fujitsu Network Communications Inc. does not warrant or represent that the contents of this document are error free. Furthermore, the contents of this document are subject to update and change at any time without notice by Fujitsu Network Communications Inc., since it reserves the right, changes in equipment design or components as progress in engineering methods may warrant. No part of the contents of this document may be copied, or otherwise reproduced without the express written consent of Fujitsu Network Communications Inc.

Compliance Information

FCC

This device complies with part 15 of the FCC Rules. Operation is subject to the following two conditions: (1) This device may not cause harmful interference, and (2) this device must accept any interference received, including interference that may cause undesired operation.

When the device is so small or for such use that it is impracticable to label it with the statement specified under paragraph (a) of this section in a font that is four-point or larger, and the device does not have a display that can show electronic labeling, then the information required by this paragraph shall be placed in the user manual and must also either be placed on the device packaging or on a removable label attached to the device.

This equipment has been tested and found to comply with the limits for Class B digital devices, pursuant to Part 15 of the FCC Rules. These limits are designed to provide reasonable protection against harmful interferences when the equipment is operated in a commercial environment. This equipment generates, uses, and can radiate radio energy and if not installed in accordance with the instruction manual, may cause harmful interference to radio communications. However, there is no guarantee that interference will not occur in a particular installation. If this equipment does cause harmful interference to radio or television reception, which can be determined by turning the equipment off and on, the user is encouraged to try to correct the interference by one or more of the following measures: Reorient or relocate the receiving antenna; increase the separation between the equipment and receiver; consult the dealer or an experienced radio technician for help. Operation of this equipment in a residential area is likely to cause harmful interference, which the user is required to correct at his/her expense.

Class B Emission Limits

Standards for Class B Emission limits for North America as follows:

FCC Part 15, Class B (U.S.A.)

Product Safety Regulatory Standards

Product safety regulatory standards as follows:

- UL-cUL Listed at 45°C ambient to UL62368-1
- UL-cUL Listed UL60950-22
- UL 50E (Enclosures for Electrical Equipment, Environmental Considerations)
- CAN/CSA C22.2 No. 62368-1
- 47 CFR Part 1.130, RF Radiation Exposure
- 47 CFR Part 15B, Unintentional Radiation
- 47 CFR Part 27, Wireless Communications Services
- 47 CFR Part 90, Private Land Mobile Radio Services
- 21 CFR Chapter 1, Subchapter J, Class 1 Laser Product

UL Label

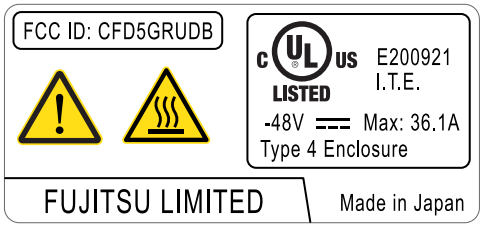

FNC00163 1_Rev_01

Important Warnings and Cautions

Observe all warnings in the text or on equipment labels regarding high-voltage or high-temperature conditions. The following warnings and figures apply to most Fujitsu products.

Respectez tous les avertissements dans le texte ou sur les étiquettes de l'équipement concernant les conditions de haute tension ou de haute température. Les avertissements suivants et les chiffres s'appliquent à la plupart des produits Fujitsu.

ESD Cautions

Units are stamped with the following anti-electrostatic markings. Observe the following precautions to avoid damage from ESD:

- Always transport and store the unit in an ESD approved shipping bag.
- Always wear an ESD wrist strap, with a minimum 1-megohm resistance, that is connected to safety ground. Do not use a damaged wrist strap.

Précautions ESD

Les appareils portent les marquages anti-électrostatiques suivants. Observez les précautions suivantes pour éviter les dommages dus aux décharges électrostatiques:

- Transportez et stockez toujours l'appareil dans un sac d'expédition approuvé ESD.
- Portez toujours un bracelet antistatique, avec une résistance minimale de 1 mégohm, qui est connecté à la terre de sécurité. N'utilisez pas un Dragonne.

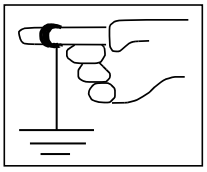

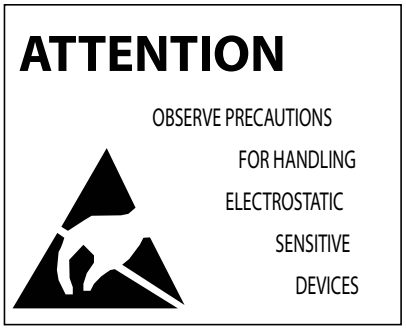

Figure 1
Anti-Electrostatic Markings

Table 1
RF Safety

Safety Warning

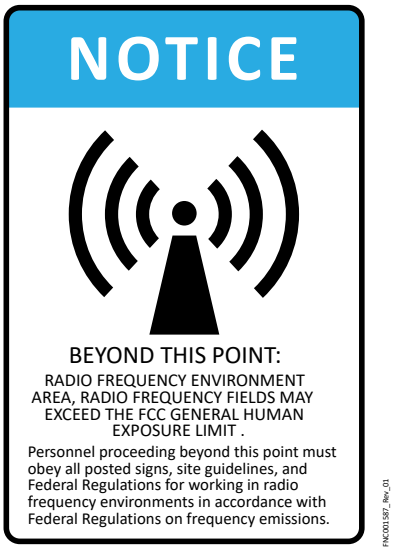

Locations where RF field levels may exceed the FCC Maximum Permissible Exposure limits for General Population/Uncontrolled exposure but are definitely below the FCC MPE limits for Occupational/Controlled exposure.

Alerte de Sécurité

Tout site ou l'intensité des fréquences radio (RF) peuvent excéder l'intensité maximale générale permise par le FCC pour une exposition non contrôlée et simultanément être inferieure a la limite maximale d'exposition permise (MPE) du FCC en regard de l'exposition professionnelle contrôlée.

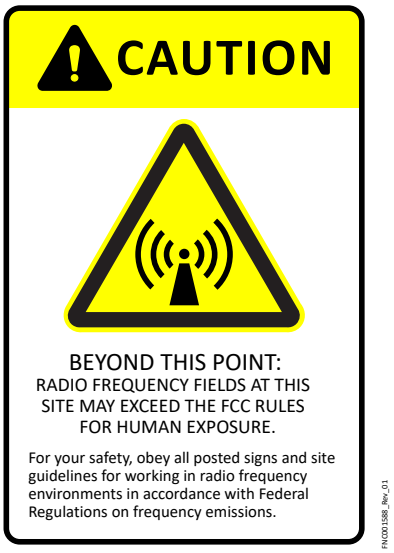

Locations where RF field levels in some areas of the site may exceed the FCC MPE limits for Occupational/Controlled exposure.

Tout site, en tout ou en partie, où l'intensité des fréquences radio (RF) peuvent excéder la limite maximale d'exposition permise (MPE) du FCC en regard de l'exposition professionnelle contrôlée.

Table 1 (Cont.)
RF Safety

Safety Warning

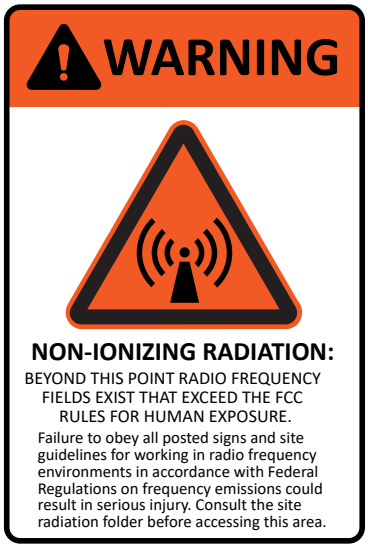

FNC001589_Rev_01

The strong language used on this sign is designed to mark areas with very high RF field levels. This sign is rarely needed to mark ground-level sites. No access should be allowed into areas marked by this sign unless power has been reduced or the transmitter has been shut off.

Alerte de Sécurité

L'intention de cette mise en garde est d'indiquer les endroits sujet a des fréquences radio de haute intensité. Cette mise en garde est rarement requise au niveau du sol. Tout site en présence de cet avertissement ne devrait pas être accédé par le personnel avant de s'assurer que le transmetteur radio est complètement désactivé ou que l'intensité du signal radio transmis a été réduis à des niveaux acceptables.

Warnings

Fiber Warnings

Danger: Never handle exposed fiber with your bare hands or touch it to bare skin. Fiber fragments can enter the skin and are difficult to detect and remove.

Avertissements de Fibre

Danger: Ne jamais manipuler une fibre exposée à mains nues et ne jamais la faire entrer directement en contact avec une partie du corps. Des fragments de fibre peuvent pénétrer la peau et leur détection et extraction sont extrêmement difficile.

Laser Safety Precautions

RUs consist of IEC/EN 60825-1 Class 1 optical interface units.

Avertissements Relié au Laser

RUs contient des interfaces optiques basées sur des lasers de IEC/EN 60825-1 Classe 1.

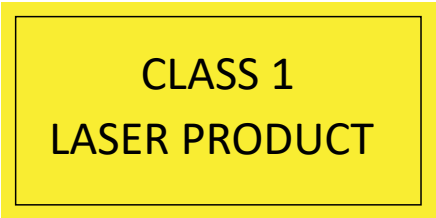

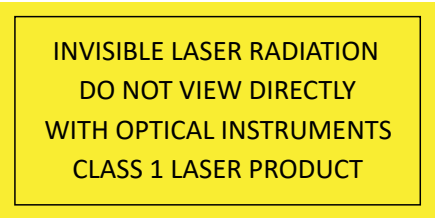

FNC000895_Rev_02

Laser Safety Precautions

The RU is compliant with IEC/EN 60825-1:2007 & 2014.

The RUs consist of IEC/EN 60825-1, Hazard Level 1 Optical interface units.

Danger: The RUs generate invisible laser radiation. Observe the following precautions:

- Avoid direct exposure to the beam.
- Never look into the end of a fiber, fiber cable, or fiber pigtail. Permanent eye damage or blindness can occur quickly when laser radiation is present.
- Viewing the laser output with certain optical instruments designed for use at a distance (for example, telescopes and binoculars) may pose an eye hazard.
- Use of controls, adjustments, or procedures other than those specified may result in hazardous laser radiation exposure.

Installation Restrictions

The following guidelines apply to the installation of this equipment:

- Equipment is intended for installation in Restricted Access Area in accordance with the National Electrical Code, ANSI/NFPA 70.
- A suitable disconnect device must be provided for the equipment. Caution: To de-energize the equipment, all input power circuits (–48 V DC battery) must be removed prior to maintenance/ servicing or upgrading.
- Circuits Overloading—Consideration should be given to the connection of the equipment to the supply circuit and the effect that overloading of the circuits might have on overcurrent protection and supply wiring. Appropriate consideration of equipment nameplate ratings should be used when addressing this concern.

Avertissements Relié au Laser

RU est conforme aux normes IEC/EN 60825-1:2007 & 2014.

RUs est constitué de modules d'interface optique compatibles avec la norme de sécurité IEC/EN 60825-1, niveau 1.

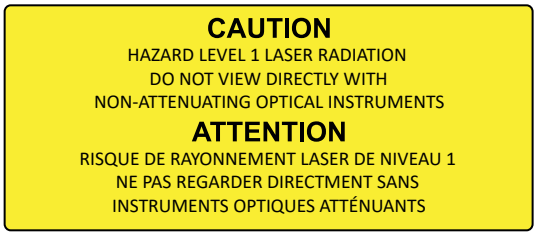

FNC000896_Rev_01

Danger: RUs génèrent du rayonnement laser invisible. Veuillez toujours observer les précautions suivantes:

- Eviter toute exposition directe au rayon.
- Ne jamais regarder dans l'extrémité ouverte d'une optique ou dans son connecteur. La présence, meme tres brève, d'un signal optique invisible peux engendrer des dommages permanent à l'oeil et à la vision.
- L'observation du signal laser avec certains instruments optiques conçus pour l'observation à longue distance (par exemple, les téléscopes et les jumelles) peuvent causer des dommages sévères à l'oeil et à la vision.
- L'application de procédures, calibration ou ajustements autres que celles dans ce manuel peuvent causer une exposition dangereuse aux radiations optiques transmises par cet équipement.

Restrictions d'Installation

Les mesures de sécurité suivantes s'appliquent lors de l'installation de cet équipement:

- Les matériels sont destinés à être installés dans des EMPLACEMENTS À ACCÈS RESTREINT conforme au Code Electrique Canadian (CEC) Partie 1 CAN/CSA C22.1.
- Cet équipement devrait être accompagne d'un dispositif ad équat de d é connection. Avertissement: S'assurer que toute source d'alimentation électrique, sous la forme de batterie ou courant direct a –48 V DC ou les deux cordons, est proprement d é connect é e avant d'entreprendre toute op é ration de maintenance sur l' équipement.
- Surcharge de Circuits—L'installation de l'équipement doit prendre en consideration le risque et l'impact d'une surcharge électrique sur le circuit d'alimentation et le dispositif de protection de surcharge de courant. Veuillez considérer les directives de classification électrique fournies sur l'étiquette d'identification de l'équipement.

Installation Restrictions

- Reliable Earthing—Reliable earthing of the equipment should be maintained. Particular attention should be given to supply connections other than direct connections to the branch circuit (for example, use of power strips).
- Use UL Listed Lugs suitable for the wire size and bolt patterns/ size.
- Use copper conductors only for power circuits.
- The unit must be connected to a reliable earth (grounded) to comply with international safety standards and the NEC. use 2ea. M8 type screws to mount the safety ground wire (6AWG).
- A 50A branch circuit protection is required when installed per the NEC.
- This equipment is not suitable for use in locations where children are likely to be present.
- This will connect to an Ethernet network with outside plant routing.
- For the AISG cable - CM3 minimum requirement for the AISG cable.

Restrictions d'Installation

- Mise à la terre fiable: mise à la terre fiable de l'équipement doit être maintenu. Une attention particulière doit être accordée les connexions d'alimentation autres que les connexions directes à la branche circuit (par exemple, utilisation de multiprises).
- Utilisez seulement des écrous et terminaisons approuvées par Underwriters Laboratoire (UL) qui sont compatibles avec les fils d'alimentation ainsi que la grosseur et le filetage des boulons utilisés avec cet équipement.
- Utilisez des conducteurs en cuivre pour les circuits d'alimentation.
- L'unité doit être connectée à une terre fiable (mise à la terre) pour se conformer aux normes de sécurité internationales et au NEC. utilisez 2ea. Vis de type M8 pour monter le fil de terre de sécurité (6AWG).
- Une protection de circuit de dérivation de 50 A est requise une fois installée.
- Cet équipement ne convient pas pour une utilisation dans des endroits où des enfants sont susceptibles d'être présents.
- Cet équipement pas susceptibles de se connecter à un réseau Ethernet avec le routage des installations extérieures.
- Pour le câble AISG - Exigence minimale CM3 pour le câble AISG.

Flammable Liquids Warning

Danger: Do not use flammable liquids or sprays around telecommunications equipment. Electrical fan motors and other potential ignition sources within the equipment might ignite the flammable material and cause personal injury or damage to the equipment. If uncertain about whether a liquid or spray is flammable, contact the manufacturer.

Mise en Garde Concernant les Liquides Inflammables

Danger: Ne pas utiliser de liquides ou aérosols volatiles près de l'équipement de télécommunication. Les ventilateurs électriques ainsi que d'autres sources d'allumage à l'intérieur de l'équipement pourraient enflammer les liquides ou aérosols et causer des blessures corporelles ou du dommage a l'équipement. Veuillez consulter le fabricant de tout liquide ou aérosols utilise près de l'équipement si vous êtes incertains de son degré d'inflammabilité.

Proper Disposal Procedures for Information Technology Equipment within EU

All electrical and electronic equipment or units must be disposed of in accordance with European Directive 2012/19/EU for Waste Electrical and Electronic Equipment (WEEE).

Network communications or commercial equipment customers can dispose of Fujitsu equipment by contacting the Fujitsu regional office in their country. Customers can locate regional offices at http://www.fujitsu.com/global/.

Fujitsu will ensure the proper recycling, reuse, and other forms of recovery of WEEE. Potential hazardous substances in WEEE can harm the environment. You can contribute to the elimination of these effects through your cooperation.

Additional WEEE disposal information may be found at http://www.fujitsu.com/global/about/environment/approach/policy/.

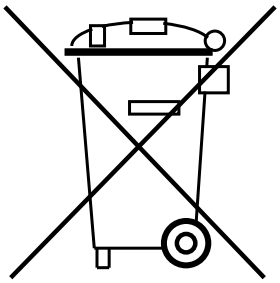

General Terms and Conditions of Sale Notice

Use of the software or documentation is subject to the General Terms and Conditions of Sale (GENTS) in effect between Fujitsu and the customer at the time the customer accesses, downloads, or installs the software. If no GENTS are in effect, use of the software or documentation is subject to the terms posted at http://responder.fnc.fujitsu.com/gents/reseller/index.htm. If you do not agree with terms and conditions, Fujitsu is unwilling to grant a license to use the software, and you should promptly return the software and all accompanying items for a full refund of money paid.

Document Change Notice

Issue 1.1

Location of Change	Description of Change
Throughout	■ Added warnings about maximum power input level ■ Updated graphics to adhere to internal standards

Issue 1

Location of Change	Description of Change
Throughout	■ Initial release

1
Overview

Fujitsu's Radio Unit (RU) is compliant with the ORAN interface specifications supporting the 7.2x split network configuration. The RU supports Open Radio Access Network (ORAN) interface. The RU comes equipped with one 10G eCPRI optical interface port to communicate with the Distributed Unit (DU) for fronthaul network interfacing. This compact, multi-band, multi-technology RU provide a standard open interface to other ORAN compliant vendor CU/DU, EMS, EPC and OSS products. Furthermore, the RU also supports the specifications set out in 3GPP Release 15.

The following figure shows how the RU connects to the DU using the eCPRI optical port.

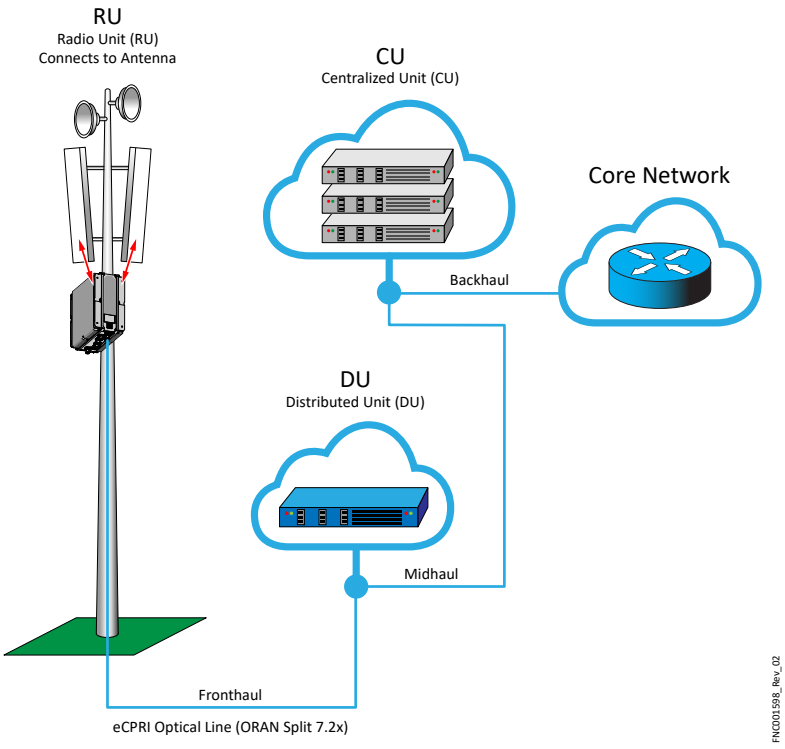

Figure 2
RU Connections Overview

The RU has the following features:

- Four antenna ports shared across frequency bands
- Supports 4 x 40 W for Band 70 and 4 x 60 W for Band 66, with maximum output power of 320 watts
- One 10G eCPRI port for Distributed Unit (DU) communication, one Remote Electrical Tilt (RET) port, and one DC power port, as external interfaces
- ORAN Opt 7.2x
- eCPRI
- 3GPP Release 15 (upgradable to Release 16)
- Software Download (SWDL)
- Zero Touch Provisioning
- IPv4 and IPv6 support
- Downlink Carrier Aggregation (CA)

2
RU Hardware Feature

In this chapter:

2.1 RU Profile
2.2 RU Specifications
2.3 RU Downlink/Uplink Default Parameters
2.4 Antenna Configuration
2.5 Carrier Configuration
2.6 Functional Block Diagram
2.7 External Interface
2.8 TX Control Function
2.9 Performance Requirement

2.1
RU Profile

The following figure shows the different profile views of the RU.

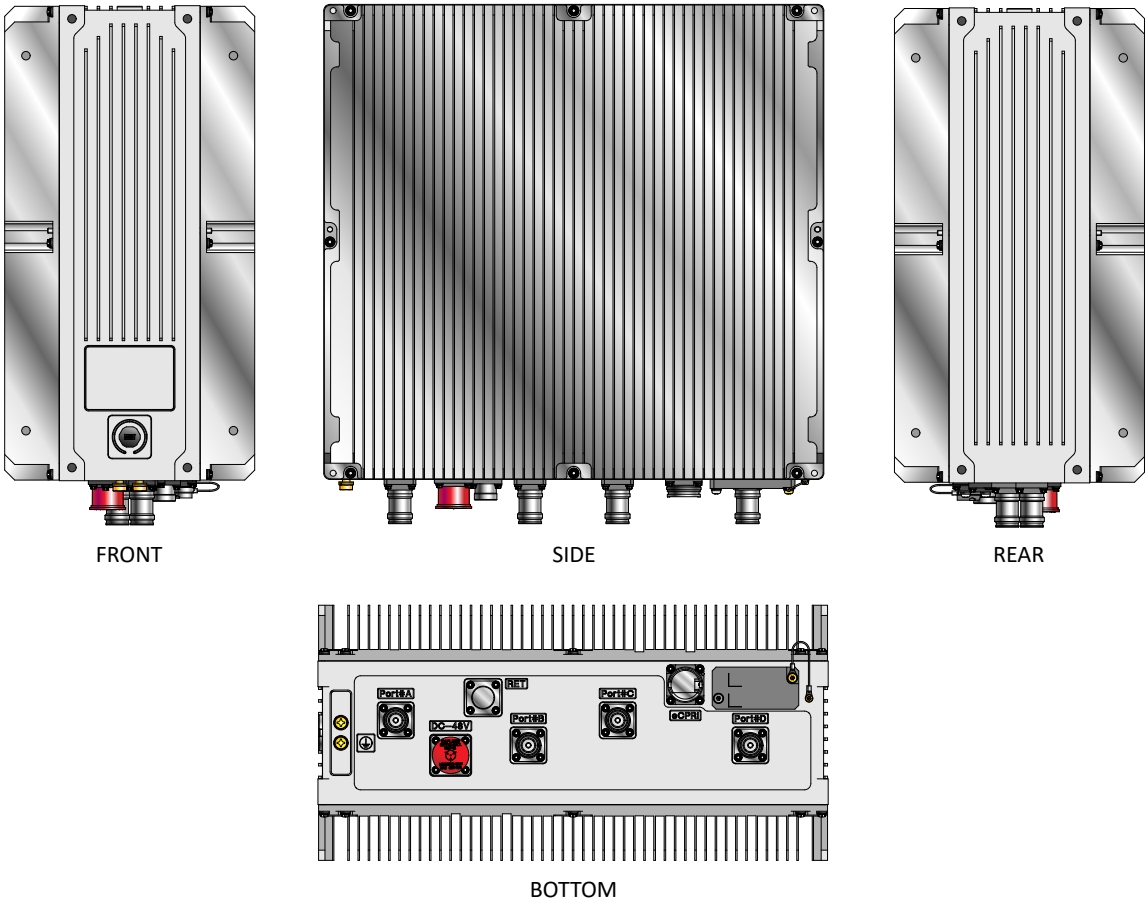

Figure 3
RU Profile Views

2.2
RU Specifications

In this section:

2.2.1 Environmental Specifications
2.2.2 Transport and Storage Requirements
2.2.3 Product Safety Specification
2.2.4 Electromagnetic Compatibility

Table 2
RU General Specifications

Item	Specification	
Frequency band	Band 70 UL: 1695…1710 MHz DL: 1995…2020 MHz (DL/UL Gap=285 MHz)	Band 66 UL: 1710…1780 MHz DL: 2110…2200 MHz (DL/UL Gap=330 MHz)
Antenna configuration	4T4R, 4 x 40 W	4T4R, 4 x 60 W
	Total power: 320 W Refer to Antenna Configuration.	
Carrier configuration	LTE: 5, 10, 15[1], 20, 25 MHz BW	LTE: 5, 10, 15, 20 MHz BW
	Up to 2 carriers Refer to Carrier Configuration.	Up to 3 carriers Refer to Carrier Configuration.
Operating temperature	–40…+45 ℃, with 1.0 m/s ambient wind speed (without sun shield or sun shade)[2, 3, 4]	
5G-NR	RU supports 5G-NR on two carriers on n70 and n66 bands. Single-carrier 5G-NR support is available on both n70 and n66 bands. RU supports a maximum of four carriers per port.	
Volume	< 30L (The volume calculation does not include connectors, protrusions, or manufacturing tolerances.)	
Dimension (W x H X D)	400 x 380 x 200 mm	
Weight	< 29.0 kg max (except the mounting brackets, other options)	
Power consumption	< 1300 W (under all operational condition, with AISG)	

Table 2 (Cont.)
RU General Specifications

Item	Specification
Interface	▪ Optical interface x1 for ORAN (10G SFP) • SFPs are changeable in the field. • Cascading of RU is not supported. ▪ ANT port x 4 (4.3-10 RF connectors) ***Warning:*** Avoid excessive power input to prevent RU damage. The maximum absolute input level of the Rx port is +3.5 dBm (5 minute max) based on 3GPP in-band blocking specifications. ***Avertissement:*** Évitez une alimentation électrique excessive pour éviter d'endommager RU. Le niveau d'entrée absolu maximal du port Rx est de +3,5 dBm (5 minutes maximum) sur la base des spécifications de blocage dans la bande 3GPP. ▪ RET (AISG 8-pin circular connector conforming to *IEC 60130-9 - Ed. 3.0* with screw-ring lock.) ▪ LED (For indication of RU status, green: normal condition, red: failure. The eCPRI condition indicator) ▪ Debug/Test port (RJ45 supports 100Base-T or 1GE. **Only for manufacturing use**. ▪ Power connector (Amphe-BTS connector series or compatible connector is used. 2 wire (–48 V DC, Return)) ▪ 6AWG FG (M6 bolts x 2), 0.625 mm hole spacing
Optical bit rate	10.3125 Gb/s
Antenna Connector Type	4.3-10 RF Connector
Antenna Control Interface	AISG, C485 connector
Power Supply	–58…–36 V DC

1 15 MHz is not currently supported
2 The RU is designed to be more efficient with heat dissipation by expecting air convection.
3 TX Power down at temperature range of +45 to +55 ℃.
4 The RU supports Cold start operation. Refer to TX Control Function and Environmental Specifications.

Table 3
Measurement Function

Item	Specification
VSWR alarm reporting	The RU supports Voltage Standing Wave Radio (VSWR) alarm reporting on all external TX RF connections by measuring the TX RF-signal return loss. The VSWR is less than 1.5 for each port under all operating and environmental conditions. When VSWR at any port exceeds 1.5, the RU reports an alarm to the EMS and the RU stops transmit power in order to protect the RU from damage. The alarm indicates which port has exceeded the VSWR requirement. Refer to RU Alarms.
Noise floor measurement	The RU supports the function of measuring the Received Total Wideband Power (RTWP), when initiated by EMS or when initiated by the DU.

Table 3 (Cont.)
Measurement Function

Item	Specification
Alarm/control	The RU reports an alarm when the following status changes occur on the RU. The RU provides alarm to the EMS, in case of the RU HW failure. ▪ TX Power status change ▪ Cold start ▪ Fronthaul Port Status Change ▪ Node Shutdown ▪ Channel Frequency Change ▪ RU Parameter Change ▪ Node Voltage out-of-range condition ▪ Node Temperature out-of-range condition ▪ RU generates high-temperature, low-temperature and shutdown temperature alarms, which report to the EMS. ▪ Sync status changes (fail, not locked, or out-of-sync, disabled) ▪ Node Synchronization Lock Status Changed ▪ Node Internal Clock Status Change ▪ Node PTP Master/Slave Status Change ▪ RU Local Access Attempt

Table 4
ORAN

Item	Specification
Synchronization	The RU supports the following standards: ▪ Telecom Slave Clock (T-TSC) to G8275.1. RU provides additional noise filtering to filter front-haul interface dynamic noise, which helps to meet 3GPP frequency accuracy requirement ▪ RU maintains sync holdover with SyncE, in case of GPS or IEEE 1588 loss for 24 hours. ▪ RU supports G.8275.1 synchronization. ▪ RU supports IEEE 1914.1, ITU-T G.826x, G.827x series. ▪ RU can connect to a DU on site located remotely in a data center as far as 200 microseconds away.
Internet protocol	RU supports IPv4 and IPv6.
Service interruption at SW upgrading	< 90 sec Service interruption is defined as the preparation for the RU to establish the M/S-Plane with the host device.
Mean Time Between Failures (MTBF)	> 175,320 hours at RU internal temperature. RU MTBF exceeds 20 years or higher.
YRR (FRR)	< 2%

Table 5
Port Descriptions

Name	Description	Connector type
DC –48V	Power connector	Amphe-BTS compatible, 10-761296-Z2S
Port A through D	Antenna port A through D	4.3-10
Maintenance Window	Michigan Manufacturing International (MMI) interface, waterproof by Machine Tool Wire (MTW) cover	
LED	Three LEDs in Maintenance window	n/a
Eth (not used)	Mounted for measurement function	RJ45
eCPRI	The eCPRI format is based on ORAN specification	FullAXS mini compatible Cage for SFP+
RET	AISG port	Compliant to AISG v2.0 connector

2.2.1 Environmental Specifications

Operational Humidity
0.03 g/m3 and 30 g/m3 of absolute humidity
Operational Temperature Range
–40 to +45 ℃ (with solar radiation, without sun-shade) Wind speed condition = 1.0 m/s
IP Rating (Water Resistance)
IP65
Cooling
Passive
Cold Start
When the system temperature at startup is –40 to –20 ℃, the system reports to the EMS as a Cold Start state. RF transmission is not performed and power amp is set to on for warmup. The temperature is monitored from the start of the device, and the Cold start state is released when the temperature reaches –20 ℃ and reported to the EMS.
Air Pressure
70-106 kPa Compliant to IEC 60068-2 standards

Wind Pressure	
When installed on the back of the antenna or installed on its own (away from the antenna), the RU is functional, operational, and able to withstand winds in excess of 240 Km/hour (66.6 m/s).	
Earthquake	
Telcordia GR-63, Zone 4	
Environmental Exposure	
Gas Exposure	IEC-60068-2-60 Test method: JIS-C-0048 Method-4 Criteria: Test piece is used. Rating 4 in JIS H8502.
Salt fog	Telcordia GR-487

2.2.2 Transport and Storage Requirements

Packaged Equipment Shock Drop	
Telcordia GR 63	
Mass: < 40 kg Height	500 mm
Mass: < 50 kg Height	400 mm
Criteria	Must not sustain any physical damage or deterioration in functional performance Compliant with GR-63 standards
Storage Temperature	
–33…+40 °C (91.4…104 °F)	
Relative Humidity	15…100%
Absolute Humidity	0.26…25 g/m3
Change of Temperature	0.5 °C/min (32.9 °F/min)
Vibration	
ETSI EN 300 019-2-4, Severity class 1	

2.2.3 Product Safety Specification

Basic Specification	UL62368-1 2nd edition
Outdoor Specification	UL 50E (UL60950-22) CSA-C22.2

Product Safety Approvals / Certification	RU has been tested by a Nationally Recognized Testing Laboratory (NRTL). A test report issued by a NRTL shows compliance against UL 50E Ed. 1-2007, CAN/CSA-C22.2 NO. 94.2-07 and required encapsulation class.

2.2.4 Electromagnetic Compatibility

Conducted Emission

Power Port	Unintentional radiation: CFR 47, Part 15B Test mode: traffic mode
RET Port	Conducted emissions 3GPP 38.113 Test mode: traffic mode

Radiated Emission

Unintentional radiation	CFR 47, Part 15B
Test Standards	3GPP 38.113
Radio frequency radiation exposure limits	CFR 47, Part 1.1310

Immunity Performance

Test standard	3GPP 38.113
Performance Criteria A	The Equipment Under Test (EUT) must continue to operate as intended during and after test. No degradation of performance or loss of functions.
Performance Criteria B	Temporary loss of function is allowed, provided the function is self-recoverable. Radio must meet performance criteria before and after completion of test.

Immunity Specification

Table 6
Specification In 3GPP 38.113

Phenomenon	Application	Reference Standard	Detail Specification	Criteria
RF electromagnetic field (80… 6000 MHz)	Enclosure	IEC 61000-4-3	Radiated Immunity	A

Table 6 (Cont.)
Specification In 3GPP 38.113

Phenomenon	Application	Reference Standard	Detail Specification	Criteria
Electrostatic discharge	Enclosure	IEC 61000-4-2	Electric Discharge	B
Fast transients common mode	Signal, telecommunications and control ports, DC power input ports	IEC 61000-4-4	Fast Transients Common Mode	B
RF common mode 0, 15…80 MHz	Signal, telecommunications and control ports, DC power input ports	IEC 61000-4-6	RF Common Mode	A
Surges, common and differential mode	AC power input ports, telecommunications port	IEC 61000-4-5	Resistability of Lightning	B

Radiated Immunity

Test Standard	3GPP 38.113 IEC 61000-4-3 Level 3
Test mode	Traffic mode, excludes receiver exclusion band.
80…6000 MHz	3 V/m, AM 80%
Performance Criteria	A

Electric Discharge

Test standard	3GPP 38.113 IEC 61000-4-2
Contact discharge	±4 kV
Air discharge	±8 kV
Performance Criteria	B

Fast Transients Common Mode

Test standard	3GPP 38.113 IEC 61000-4-4 0.5 kV
Performance criteria	B
Injected port	Power consistency, RET consistency

RF Common Mode

Test standard	3GPP 38.113 IEC 61000-4-6 Level 2
150 kHz…80 MHz	3 Vrms
Performance criteria	A
Injected port	Power port, RET port

Resistability of Lightning

DC Power Port

IEC61000-4-5 (Combination wave)	Level 4
L-L (Differential mode)	±2 kV(1.2/50 µs)
L-FG (Common mode)	±4 kV(1.2/50 µs)
Performance criteria	B
Injected port	Power port

RET Port

IEC61000-4-5 (Combination wave)	Level 4
L-L (Differential mode)	±2 kV(10/700 µs)
L-FG (Common mode)	±4 kV(10/700 µs)
Performance criteria	B
Injected port	RET port

RF Port

IEC61000-4-5 (Combination wave)	Level 4
L-FG (Common mode)	±20 kV (1.2/50 µs)
Performance criteria	B
Injected port	RF port

2.3
RU Downlink/Uplink Default Parameters

Down Link/Up Link	Item	Band	Min	Max	Recommended setting
Down Link	Frequency (MHz)	n66	2110	2200	2190
		n70	1995	2020	2010
	BW (MHz)	n66	5	20	20
		n70	5	20	20
	Power/port (dBm)	n66	37.8	47.8	47.8
		n70	36.0	46.0	46.0
Up Link	Frequency (MHz)	n66	1710	1780	1745
		n70	1695	1710	1705
	BW (MHz)	n66	5	20	20
		n70	5	10	10

2.4
Antenna Configuration

The RU communication interface has connections between antenna devices. The RU has 4 RF ports, with n70, n66 sharing the same RF ports. The layout of antenna ports is shown in the following figure.

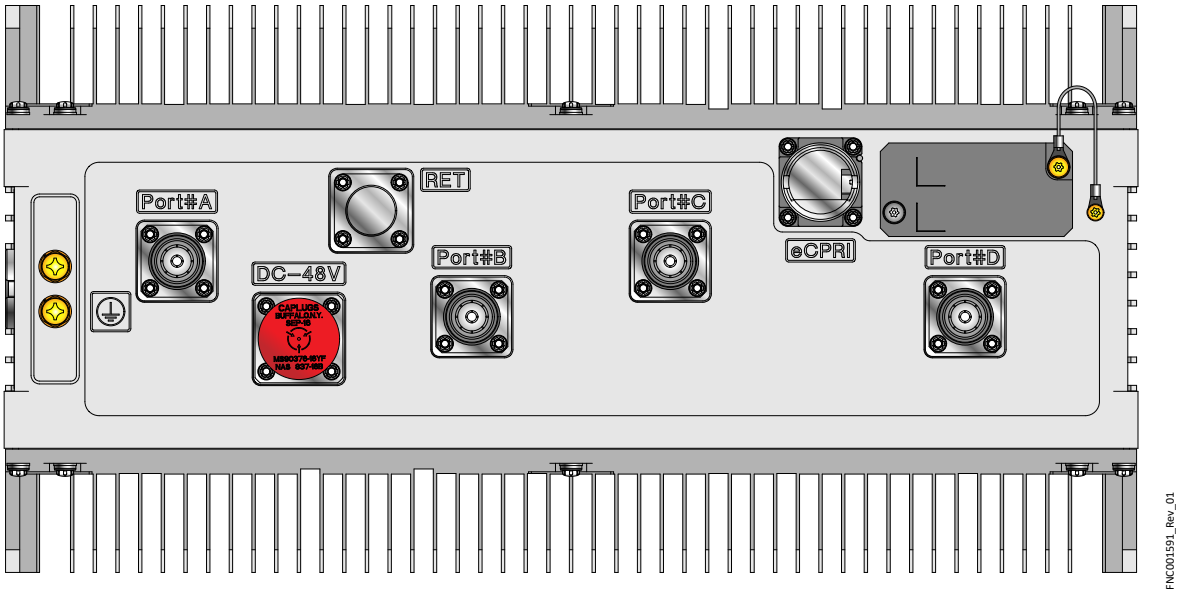

Figure 4
Layout of Antenna Ports (Bottom of RU)

Warning: Avoid excessive power input to prevent RU damage. The maximum absolute input level of the Rx port is +3.5 dBm (5 minute max) based on 3GPP in-band blocking specifications.

Avertissement: Évitez une alimentation électrique excessive pour éviter d'endommager RU. Le niveau d'entrée absolu maximal du port Rx est de +3,5 dBm (5 minutes maximum) sur la base des spécifications de blocage dans la bande 3GPP.

The RU can transmit maximum 80 W per antenna port, and the maximum output power is 320 W. The features of the antenna configuration are listed in the following table.

Table 7
Antenna Configuration

Port	Port Type	Maximum output power	Remarks
Port#A	4.3-10	Band 70: 40 W Band 66: 60 W	Maximum 80 W per antenna port.
Port#B		Band 70: 40 W Band 66: 60 W	
Port#C		Band 70: 40 W Band 66: 60 W	
Port#D		Band 70: 40 W Band 66: 60 W	
Total Power	320 W ***Note:*** All band combinations support a maximum power output of 320 W.		

2.5
Carrier Configuration

The RU supports 5G-NR carrier configuration as shown in the following table.

Each band has the following available carrier and maximum transmit power:

n70: Up to two carriers, 40 W/port

n66: Up to three carriers, 60 W/port

Note: RU supports a maximum of four carriers and 80 W per port (total 320 W) as the possible combination of carrier and maximum transmit power.

Table 8
Downlink (n70)

H[1]	AWS-4[2]	Carrier Power (W)		Total Power (W)	Power Density (W/MHz)	Default	Max
		C0	C1				
1C Downlink							
5 MHz	—	20.0	n/a	20.0	4.00	x	—
5 MHz	—	40.0	n/a	40.0	8.00	—	x
—	20 MHz	20.0	n/a	20.0	1.00	x	—
—	20 MHz	40.0	n/a	40.0	2.00	—	x
25 MHz		20.0	n/a	20.0	0.80	x	—
25 MHz		40.0	n/a	40.0	1.60	—	x
25 MHz		20.0	n/a	20.0	0.80	x	—
25 MHz		40.0	n/a	40.0	1.60	—	x
25 MHz		20.0	n/a	20.0	0.80	x	—
25 MHz		40.0	n/a	40.0	1.60	—	x
2C Downlink							
5 MHz	20 MHz	8.0	32.0	40.0	1.60	x	x

1 H: Bandwidth is 1995…2000 nm and frequency is 5 MHz.
2 AWS-4: Bandwidth is 2000…2020 nm and frequency is 20 MHz.

Table 9
Uplink (n70)

AWS-3 A1[1]	AWS-3 B1[2]
1C Uplink	
5 MHz	—
5 MHz	—
—	10 MHz
—	10 MHz
15 MHz[3]	
15 MHz[3]	
5 MHz	—
5 MHz	—
—	10 MHz
—	10 MHz
2C Uplink	
5 MHz	10 MHz

1 AWS-3 A1: Bandwidth is 1695…1700 nm and frequency is 5 MHz.
2 AWS-3 B1: Bandwidth is 1700…1710 nm and frequency is 10 MHz.
3 15 MHz is not currently supported.

Table 10
Downlink (n66)

AWS-3 G[1]	AWS-3 H[2]	AWS-3 I[3]	AWS-3 J[4]	AWS-4 A[5]	AWS-4 B[6]	Carrier BW (MHz)			Carrier Power (W])			Total Power	Power Density	Default	Max
						C0	C1	C2	C0	C1	C2	(W)	(W/ MHz)		
1C Downlink															
—	—	—	—	—	20 MHz	20 MHz	—	—	40.0	—	—	40.0	2.00	x	—
—	—	—	—	—	20 MHz	20 MHz	—	—	60.0	—	—	60.0	3.00	—	x
2C Downlink															
—	—	—	—	—	20 MHz	5 MHz	20 MHz	—	8.0	32.0	—	40.0	1.60	x	—
—	—	—	—	—	20 MHz	5 MHz	20 MHz	—	12.0	48.0	—	60.0	2.40	—	x
—	—	—	—	—	20 MHz	5 MHz	20 MHz	—	8.0	32.0	—	40.0	1.60	x	—
—	—	—	—	—	20 MHz	5 MHz	20 MHz	—	12.0	48.0	—	60.0	2.40	—	x

Table 10 (Cont.)
Downlink (n66)

AWS-3 G[1]	AWS-3 H[2]	AWS-3 I[3]	AWS-3 J[4]		AWS-4 A[5]	AWS-4 B[6]	Carrier BW (MHz)			Carrier Power (W])			Total Power	Power Density	Default	Max
							C0	C1	C2	C0	C1	C2	(W)	(W/ MHz)		
—	—	—	—	—	20 MHz		5 MHz	20 MHz	—	8.0	32.0	—	40.0	1.60	x	—
—	—	—	—	—	20 MHz		5 MHz	20 MHz	—	12.0	48.0	—	60.0	2.40	—	x
5 MHz	—	—	—	—	20 MHz		5 MHz	20 MHz	—	8.0	32.0	—	40.0	1.60	x	—
5 MHz	—	—	—	—	20 MHz		5 MHz	20 MHz	—	12.0	48.0	—	60.0	2.40	—	x
—	5 MHz	—	—	—	20 MHz		5 MHz	20 MHz	—	8.0	32.0	—	40.0	1.60	x	—
—	5 MHz	—	—	—	20 MHz		5 MHz	20 MHz	—	12.0	48.0	—	60.0	2.40	—	x
—	—	5 MHz	—	—	20 MHz		5 MHz	20 MHz	—	8.0	32.0	—	40.0	1.60	x	—
—	—	5 MHz	—	—	20 MHz		5 MHz	20 MHz	—	12.0	48.0	—	60.0	2.40	—	x
—	—	—	—	—	20 MHz		10 MHz	20 MHz	—	13.3	26.7	—	40.0	1.33	x	—
—	—	—	—	—	20 MHz		10 MHz	20 MHz	—	20.0	40.0	—	60.0	2.00	—	x
—	—	—	—	—	20 MHz		10 MHz	20 MHz	—	13.3	26.7	—	40.0	1.33	x	—
—	—	—	—	—	20 MHz		10 MHz	20 MHz	—	20.0	40.0	—	60.0	2.00	—	x
—	—	—	—	—	20 MHz		10 MHz	20 MHz	—	13.3	26.7	—	40.0	1.33	x	—
—	—	—	—	—	20 MHz		10 MHz	20 MHz	—	20.0	40.0	—	60.0	2.00	—	x
—	—	—	—	—	20 MHz		10 MHz	20 MHz	—	13.3	26.7	—	40.0	1.33	x	—
—	—	—	—	—	20 MHz		10 MHz	20 MHz	—	20.0	40.0	—	60.0	2.00	—	x
—	—	—	—	—	20 MHz		10 MHz	20 MHz	—	13.3	26.7	—	40.0	1.33	x	—
—	—	—	—	—	20 MHz		10 MHz	20 MHz	—	20.0	40.0	—	60.0	2.00	—	x
10 MHz		—	—	—	20 MHz		10 MHz	20 MHz	—	13.3	26.7	—	40.0	1.33	x	—
10 MHz		—	—	—	20 MHz		10 MHz	20 MHz	—	20.0	40.0	—	60.0	2.00	—	x
—	10 MHz		—	—	20 MHz		10 MHz	20 MHz	—	13.3	26.7	—	40.0	1.33	x	—
—	10 MHz		—	—	20 MHz		10 MHz	20 MHz	—	20.0	40.0	—	60.0	2.00	—	x
—	—	—	10 MHz		20 MHz		10 MHz	20 MHz	—	13.3	26.7	—	40.0	1.33	x	—
—	—	—	10 MHz		20 MHz		10 MHz	20 MHz	—	20.0	40.0	—	60.0	2.00	—	x
—	—	—	—	—	20 MHz		15 MHz[7]	20 MHz	—	17.1	22.9	—	40.0	1.14	x	—
—	—	—	—	—	20 MHz		15 MHz[7]	20 MHz	—	25.7	34.3	—	60.0	1.71	—	x
—	—	—	—	—	20 MHz		15 MHz[7]	20 MHz	—	17.1	22.9	—	40.0	1.14	x	—
—	—	—	—	—	20 MHz		15 MHz[7]	20 MHz	—	25.7	34.3	—	60.0	1.71	—	x
—	—	—	—	—	20 MHz		15 MHz[7]	20 MHz	—	17.1	22.9	—	40.0	1.14	x	—
—	—	—	—	—	20 MHz		15 MHz[7]	20 MHz	—	25.7	34.3	—	60.0	1.71	—	x
15 MHz[7]	—	—	—	—	20 MHz		15 MHz[7]	20 MHz	—	17.1	22.9	—	40.0	1.14	x	—

Table 10 (Cont.)
Downlink (n66)

AWS-3 G[1]	AWS-3 H[2]	AWS-3 I[3]	AWS-3 J[4]		AWS-4 A[5]	AWS-4 B[6]	Carrier BW (MHz)			Carrier Power (W])			Total Power	Power Density	Default	Max
							C0	C1	C2	C0	C1	C2	(W)	(W/ MHz)		
15 MHz[7]	—	—	—	—	20 MHz		15 MHz[7]	20 MHz	—	25.7	34.3	—	60.0	1.71	—	x
15 MHz[7]			—	—	20 MHz		15 MHz[7]	20 MHz	—	17.1	22.9	—	40.0	1.14	x	—
15 MHz[7]			—	—	20 MHz		15 MHz[7]	20 MHz	—	25.7	34.3	—	60.0	1.71	—	x
—	—	15 MHz[7]			20 MHz		15 MHz[7]	20 MHz	—	17.1	22.9	—	40.0	1.14	x	—
—	—	15 MHz[7]			20 MHz		15 MHz[7]	20 MHz	—	25.7	34.3	—	60.0	1.71	—	x
—	—	—	—	—	20 MHz		20 MHz	20 MHz	—	20.0	20.0	—	40.0	1.00	x	—
—	—	—	—	—	20 MHz		20 MHz	20 MHz	—	30.0	30.0	—	60.0	1.50	—	x
—	—	—	—	—	20 MHz		20 MHz	20 MHz	—	20.0	20.0	—	40.0	1.00	x	—
—	—	—	—	—	20 MHz		20 MHz	20 MHz	—	30.0	30.0	—	60.0	1.50	—	x
—	20 MHz				20 MHz		20 MHz	20 MHz	—	20.0	20.0	—	40.0	1.00	x	—
—	20 MHz				20 MHz		20 MHz	20 MHz	—	30.0	30.0	—	60.0	1.50	—	x
3C Downlink																
—	—	—	—	—	20 MHz		5 MHz	5 MHz	20 MHz	10.0	10.0	40.0	60.0	2.00	x	x
—	—	—	—	—	20 MHz		5 MHz	5 MHz	20 MHz	10.0	10.0	40.0	60.0	2.00	x	x
5 MHz	—	—	—	—	20 MHz		5 MHz	5 MHz	20 MHz	10.0	10.0	40.0	60.0	2.00	x	x
—	5 MHz	—	—	—	20 MHz		5 MHz	5 MHz	20 MHz	10.0	10.0	40.0	60.0	2.00	x	x
—	—	5 MHz	—	—	20 MHz		5 MHz	5 MHz	20 MHz	10.0	10.0	40.0	60.0	2.00	x	x
—	—	—	—	—	20 MHz		5 MHz	5 MHz	20 MHz	10.0	10.0	40.0	60.0	2.00	x	x
5 MHz	—	—	—	—	20 MHz		5 MHz	5 MHz	20 MHz	10.0	10.0	40.0	60.0	2.00	x	x
—	5 MHz	—	—	—	20 MHz		5 MHz	5 MHz	20 MHz	10.0	10.0	40.0	60.0	2.00	x	x
—	—	5 MHz	—	—	20 MHz		5 MHz	5 MHz	20 MHz	10.0	10.0	40.0	60.0	2.00	x	x
5 MHz	—	—	—	—	20 MHz		5 MHz	5 MHz	20 MHz	10.0	10.0	40.0	60.0	2.00	x	x
—	5 MHz	—	—	—	20 MHz		5 MHz	5 MHz	20 MHz	10.0	10.0	40.0	60.0	2.00	x	x
—	—	5 MHz	—	—	20 MHz		5 MHz	5 MHz	20 MHz	10.0	10.0	40.0	60.0	2.00	x	x
5 MHz	5 MHz	—	—	—	20 MHz		5 MHz	5 MHz	20 MHz	10.0	10.0	40.0	60.0	2.00	x	x
5 MHz	—	5 MHz	—	—	20 MHz		5 MHz	5 MHz	20 MHz	10.0	10.0	40.0	60.0	2.00	x	x
—	5 MHz	5 MHz	—	—	20 MHz		5 MHz	5 MHz	20 MHz	10.0	10.0	40.0	60.0	2.00	x	x
—	—	—	—	—	20 MHz		5 MHz	10 MHz	20 MHz	8.6	17.1	34.3	60.0	1.71	x	x
—	—	—	—	—	20 MHz		5 MHz	10 MHz	20 MHz	8.6	17.1	34.3	60.0	1.71	x	x
—	—	—	—	—	20 MHz		5 MHz	10 MHz	20 MHz	8.6	17.1	34.3	60.0	1.71	x	x
—	—	—	—	—	20 MHz		5 MHz	10 MHz	20 MHz	8.6	17.1	34.3	60.0	1.71	x	x

Table 10 (Cont.)
Downlink (n66)

AWS-3 G[1]	AWS-3 H[2]	AWS-3 I[3]	AWS-3 J[4]		AWS-4 A[5]	AWS-4 B[6]	Carrier BW (MHz)			Carrier Power (W])			Total Power	Power Density	Default	Max
							C0	C1	C2	C0	C1	C2	(W)	(W/ MHz)		
10 MHz		—	—	—	20 MHz		5 MHz	10 MHz	20 MHz	8.6	17.1	34.3	60.0	1.71	x	x
—	10 MHz		—	—	20 MHz		5 MHz	10 MHz	20 MHz	8.6	17.1	34.3	60.0	1.71	x	x
—	—	—	10 MHz		20 MHz		5 MHz	10 MHz	20 MHz	8.6	17.1	34.3	60.0	1.71	x	x
—	—	—	—	—	20 MHz		5 MHz	10 MHz	20 MHz	8.6	17.1	34.3	60.0	1.71	x	x
—	—	—	—	—	20 MHz		5 MHz	10 MHz	20 MHz	8.6	17.1	34.3	60.0	1.71	x	x
—	—	—	—	—	20 MHz		5 MHz	10 MHz	20 MHz	8.6	17.1	34.3	60.0	1.71	x	x
10 MHz		—	—	—	20 MHz		5 MHz	10 MHz	20 MHz	8.6	17.1	34.3	60.0	1.71	x	x
—	10 MHz		—	—	20 MHz		5 MHz	10 MHz	20 MHz	8.6	17.1	34.3	60.0	1.71	x	x
—	—	—	10 MHz		20 MHz		5 MHz	10 MHz	20 MHz	8.6	17.1	34.3	60.0	1.71	x	x
—	—	—	—	—	20 MHz		5 MHz	10 MHz	20 MHz	8.6	17.1	34.3	60.0	1.71	x	x
—	—	—	—	—	20 MHz		5 MHz	10 MHz	20 MHz	8.6	17.1	34.3	60.0	1.71	x	x
—	—	—	—	—	20 MHz		5 MHz	10 MHz	20 MHz	8.6	17.1	34.3	60.0	1.71	x	x
—	—	—	—	—	20 MHz		5 MHz	10 MHz	20 MHz	8.6	17.1	34.3	60.0	1.71	x	x
10 MHz		—	—	—	20 MHz		5 MHz	10 MHz	20 MHz	8.6	17.1	34.3	60.0	1.71	x	x
—	10 MHz		—	—	20 MHz		5 MHz	10 MHz	20 MHz	8.6	17.1	34.3	60.0	1.71	x	x
—	—	—	10 MHz		20 MHz		5 MHz	10 MHz	20 MHz	8.6	17.1	34.3	60.0	1.71	x	x
5 MHz	—	—	—	—	20 MHz		5 MHz	10 MHz	20 MHz	8.6	17.1	34.3	60.0	1.71	x	x
5 MHz	—	—	—	—	20 MHz		5 MHz	10 MHz	20 MHz	8.6	17.1	34.3	60.0	1.71	x	x
5 MHz	—	—	—	—	20 MHz		5 MHz	10 MHz	20 MHz	8.6	17.1	34.3	60.0	1.71	x	x
5 MHz	—	—	—	—	20 MHz		5 MHz	10 MHz	20 MHz	8.6	17.1	34.3	60.0	1.71	x	x
5 MHz	—	—	—	—	20 MHz		5 MHz	10 MHz	20 MHz	8.6	17.1	34.3	60.0	1.71	x	x
5 MHz	10 MHz		—	—	20 MHz		5 MHz	10 MHz	20 MHz	8.6	17.1	34.3	60.0	1.71	x	x
5 MHz	—	—	10 MHz		20 MHz		5 MHz	10 MHz	20 MHz	8.6	17.1	34.3	60.0	1.71	x	x
—	5 MHz	—	—	—	20 MHz		5 MHz	10 MHz	20 MHz	8.6	17.1	34.3	60.0	1.71	x	x
—	5 MHz	—	—	—	20 MHz		5 MHz	10 MHz	20 MHz	8.6	17.1	34.3	60.0	1.71	x	x
—	5 MHz	—	—	—	20 MHz		5 MHz	10 MHz	20 MHz	8.6	17.1	34.3	60.0	1.71	x	x
—	5 MHz	—	—	—	20 MHz		5 MHz	10 MHz	20 MHz	8.6	17.1	34.3	60.0	1.71	x	x
—	5 MHz	—	—	—	20 MHz		5 MHz	10 MHz	20 MHz	8.6	17.1	34.3	60.0	1.71	x	x
—	5 MHz	—	10 MHz		20 MHz		5 MHz	10 MHz	20 MHz	8.6	17.1	34.3	60.0	1.71	x	x
—	—	5 MHz	—	—	20 MHz		5 MHz	10 MHz	20 MHz	8.6	17.1	34.3	60.0	1.71	x	x
—	—	5 MHz	—	—	20 MHz		5 MHz	10 MHz	20 MHz	8.6	17.1	34.3	60.0	1.71	x	x

Table 10 (Cont.)
Downlink (n66)

AWS-3 G[1]	AWS-3 H[2]	AWS-3 I[3]	AWS-3 J[4]		AWS-4 A[5]	AWS-4 B[6]	Carrier BW (MHz)			Carrier Power (W])			Total Power	Power Density	Default	Max
							C0	C1	C2	C0	C1	C2	(W)	(W/ MHz)		
—	—	5 MHz	—	—	20 MHz		5 MHz	10 MHz	20 MHz	8.6	17.1	34.3	60.0	1.71	x	x
—	—	5 MHz	—	—	20 MHz		5 MHz	10 MHz	20 MHz	8.6	17.1	34.3	60.0	1.71	x	x
—	—	5 MHz	—	—	20 MHz		5 MHz	10 MHz	20 MHz	8.6	17.1	34.3	60.0	1.71	x	x
10 MHz		5 MHz	—	—	20 MHz		5 MHz	10 MHz	20 MHz	8.6	17.1	34.3	60.0	1.71	x	x
—	—	5 MHz	10 MHz		20 MHz		5 MHz	10 MHz	20 MHz	8.6	17.1	34.3	60.0	1.71	x	x
—	—	—	—	—	20 MHz		5 MHz	15 MHz[7]	20 MHz	7.5	22.5	30.0	60.0	1.50	x	x
15 MHz[7]	—	—	—	—	20 MHz		5 MHz	15 MHz[7]	20 MHz	7.5	22.5	30.0	60.0	1.50	x	x
15 MHz[7]			—	—	20 MHz		5 MHz	15 MHz[7]	20 MHz	7.5	22.5	30.0	60.0	1.50	x	x
—	—	15 MHz[7]			20 MHz		5 MHz	15 MHz[7]	20 MHz	7.5	22.5	30.0	60.0	1.50	x	x
—	—	—	—	—	20 MHz		5 MHz	15 MHz[7]	20 MHz	7.5	22.5	30.0	60.0	1.50	x	x
—	—	—	—	—	20 MHz		5 MHz	15 MHz[7]	20 MHz	7.5	22.5	30.0	60.0	1.50	x	x
15 MHz[7]	—	—	—	—	20 MHz		5 MHz	15 MHz[7]	20 MHz	7.5	22.5	30.0	60.0	1.50	x	x
15 MHz[7]			—	—	20 MHz		5 MHz	15 MHz[7]	20 MHz	7.5	22.5	30.0	60.0	1.50	x	x
—	—	15 MHz[7]			20 MHz		5 MHz	15 MHz[7]	20 MHz	7.5	22.5	30.0	60.0	1.50	x	x
—	—	—	—	—	20 MHz		5 MHz	15 MHz[7]	20 MHz	7.5	22.5	30.0	60.0	1.50	x	x
15 MHz[7]	—	—	—	—	20 MHz		5 MHz	15 MHz[7]	20 MHz	7.5	22.5	30.0	60.0	1.50	x	x
15 MHz[7]			—	—	20 MHz		5 MHz	15 MHz[7]	20 MHz	7.5	22.5	30.0	60.0	1.50	x	x
—	—	15 MHz[7]			20 MHz		5 MHz	15 MHz[7]	20 MHz	7.5	22.5	30.0	60.0	1.50	x	x
5 MHz	—	—	—	—	20 MHz		5 MHz	15 MHz[7]	20 MHz	7.5	22.5	30.0	60.0	1.50	x	x
5 MHz	—	—	—	—	20 MHz		5 MHz	15 MHz[7]	20 MHz	7.5	22.5	30.0	60.0	1.50	x	x
5 MHz	—	—	—	—	20 MHz		5 MHz	15 MHz[7]	20 MHz	7.5	22.5	30.0	60.0	1.50	x	x
5 MHz	—	15 MHz[7]			20 MHz		5 MHz	15 MHz[7]	20 MHz	7.5	22.5	30.0	60.0	1.50	x	x
—	5 MHz	—	—	—	20 MHz		5 MHz	15 MHz[7]	20 MHz	7.5	22.5	30.0	60.0	1.50	x	x
—	5 MHz	—	—	—	20 MHz		5 MHz	15 MHz[7]	20 MHz	7.5	22.5	30.0	60.0	1.50	x	x
—	5 MHz	—	—	—	20 MHz		5 MHz	15 MHz[7]	20 MHz	7.5	22.5	30.0	60.0	1.50	x	x
15 MHz[7]	5 MHz	—	—	—	20 MHz		5 MHz	15 MHz[7]	20 MHz	7.5	22.5	30.0	60.0	1.50	x	x
—	5 MHz	15 MHz[7]			20 MHz		5 MHz	15 MHz[7]	20 MHz	7.5	22.5	30.0	60.0	1.50	x	x
—	—	5 MHz	—	—	20 MHz		5 MHz	15 MHz[7]	20 MHz	7.5	22.5	30.0	60.0	1.50	x	x
—	—	5 MHz	—	—	20 MHz		5 MHz	15 MHz[7]	20 MHz	7.5	22.5	30.0	60.0	1.50	x	x
—	—	5 MHz	—	—	20 MHz		5 MHz	15 MHz[7]	20 MHz	7.5	22.5	30.0	60.0	1.50	x	x
15 MHz[7]	—	5 MHz	—	—	20 MHz		5 MHz	15 MHz[7]	20 MHz	7.5	22.5	30.0	60.0	1.50	x	x

Table 10 (Cont.)
Downlink (n66)

AWS-3 G[1]	AWS-3 H[2]	AWS-3 I[3]	AWS-3 J[4]		AWS-4 A[5]	AWS-4 B[6]	Carrier BW (MHz)			Carrier Power (W])			Total Power	Power Density	Default	Max
							C0	C1	C2	C0	C1	C2	(W)	(W/ MHz)		
—	—	—	—	—	20 MHz		5 MHz	20 MHz	20 MHz	6.7	26.7	26.7	60.0	1.33	x	x
—	—	—	—	—	20 MHz		5 MHz	20 MHz	20 MHz	6.7	26.7	26.7	60.0	1.33	x	x
20 MHz		—	—	—	20 MHz		5 MHz	20 MHz	20 MHz	6.7	26.7	26.7	60.0	1.33	x	x
—	20 MHz				20 MHz		5 MHz	20 MHz	20 MHz	6.7	26.7	26.7	60.0	1.33	x	x
—	—	—	—	—	20 MHz		5 MHz	20 MHz	20 MHz	6.7	26.7	26.7	60.0	1.33	x	x
20 MHz		—	—	—	20 MHz		5 MHz	20 MHz	20 MHz	6.7	26.7	26.7	60.0	1.33	x	x
—	20 MHz				20 MHz		5 MHz	20 MHz	20 MHz	6.7	26.7	26.7	60.0	1.33	x	x
—	—	—	—	—	20 MHz		5 MHz	20 MHz	20 MHz	6.7	26.7	26.7	60.0	1.33	x	x
—	—	—	—	—	20 MHz		5 MHz	20 MHz	20 MHz	6.7	26.7	26.7	60.0	1.33	x	x
20 MHz		—	—	—	20 MHz		5 MHz	20 MHz	20 MHz	6.7	26.7	26.7	60.0	1.33	x	x
—	20 MHz				20 MHz		5 MHz	20 MHz	20 MHz	6.7	26.7	26.7	60.0	1.33	x	x
5 MHz	—	—	—	—	20 MHz		5 MHz	20 MHz	20 MHz	6.7	26.7	26.7	60.0	1.33	x	x
5 MHz	—	—	—	—	20 MHz		5 MHz	20 MHz	20 MHz	6.7	26.7	26.7	60.0	1.33	x	x
5 MHz	—	—	—	—	20 MHz		5 MHz	20 MHz	20 MHz	6.7	26.7	26.7	60.0	1.33	x	x
5 MHz	20 MHz				20 MHz		5 MHz	20 MHz	20 MHz	6.7	26.7	26.7	60.0	1.33	x	x
—	5 MHz	—	—	—	20 MHz		5 MHz	20 MHz	20 MHz	6.7	26.7	26.7	60.0	1.33	x	x
—	5 MHz	—	—	—	20 MHz		5 MHz	20 MHz	20 MHz	6.7	26.7	26.7	60.0	1.33	x	x
—	5 MHz	—	—	—	20 MHz		5 MHz	20 MHz	20 MHz	6.7	26.7	26.7	60.0	1.33	x	x
—	—	5 MHz	—	—	20 MHz		5 MHz	20 MHz	20 MHz	6.7	26.7	26.7	60.0	1.33	x	x
—	—	5 MHz	—	—	20 MHz		5 MHz	20 MHz	20 MHz	6.7	26.7	26.7	60.0	1.33	x	x
—	—	5 MHz	—	—	20 MHz		5 MHz	20 MHz	20 MHz	6.7	26.7	26.7	60.0	1.33	x	x
20 MHz		5 MHz	—	—	20 MHz		5 MHz	20 MHz	20 MHz	6.7	26.7	26.7	60.0	1.33	x	x
—	—	—	—	—	20 MHz		10 MHz	10 MHz	20 MHz	15.0	15.0	30.0	60.0	1.50	x	x
—	—	—	—	—	20 MHz		10 MHz	10 MHz	20 MHz	15.0	15.0	30.0	60.0	1.50	x	x
—	—	—	—	—	20 MHz		10 MHz	10 MHz	20 MHz	15.0	15.0	30.0	60.0	1.50	x	x
—	—	—	—	—	20 MHz		10 MHz	10 MHz	20 MHz	15.0	15.0	30.0	60.0	1.50	x	x
10 MHz		—	—	—	20 MHz		10 MHz	10 MHz	20 MHz	15.0	15.0	30.0	60.0	1.50	x	x
—	10 MHz		—	—	20 MHz		10 MHz	10 MHz	20 MHz	15.0	15.0	30.0	60.0	1.50	x	x
—	—	—	10 MHz		20 MHz		10 MHz	10 MHz	20 MHz	15.0	15.0	30.0	60.0	1.50	x	x
—	—	—	—	—	20 MHz		10 MHz	10 MHz	20 MHz	15.0	15.0	30.0	60.0	1.50	x	x
—	—	—	—	—	20 MHz		10 MHz	10 MHz	20 MHz	15.0	15.0	30.0	60.0	1.50	x	x

Table 10 (Cont.)
Downlink (n66)

AWS-3 G[1]	AWS-3 H[2]	AWS-3 I[3]	AWS-3 J[4]		AWS-4 A[5]	AWS-4 B[6]	Carrier BW (MHz)			Carrier Power (W])			Total Power	Power Density	Default	Max
							C0	C1	C2	C0	C1	C2	(W)	(W/ MHz)		
—	—	—	—	—	20 MHz		10 MHz	10 MHz	20 MHz	15.0	15.0	30.0	60.0	1.50	x	x
10 MHz		—	—	—	20 MHz		10 MHz	10 MHz	20 MHz	15.0	15.0	30.0	60.0	1.50	x	x
—	10 MHz		—	—	20 MHz		10 MHz	10 MHz	20 MHz	15.0	15.0	30.0	60.0	1.50	x	x
—	—	—	10 MHz		20 MHz		10 MHz	10 MHz	20 MHz	15.0	15.0	30.0	60.0	1.50	x	x
—	—	—	—	—	20 MHz		10 MHz	10 MHz	20 MHz	15.0	15.0	30.0	60.0	1.50	x	x
10 MHz		—	—	—	20 MHz		10 MHz	10 MHz	20 MHz	15.0	15.0	30.0	60.0	1.50	x	x
—	10 MHz		—	—	20 MHz		10 MHz	10 MHz	20 MHz	15.0	15.0	30.0	60.0	1.50	x	x
—	—	—	10 MHz		20 MHz		10 MHz	10 MHz	20 MHz	15.0	15.0	30.0	60.0	1.50	x	x
—	—	—	—	—	20 MHz		10 MHz	10 MHz	20 MHz	15.0	15.0	30.0	60.0	1.50	x	x
10 MHz		—	—	—	20 MHz		10 MHz	10 MHz	20 MHz	15.0	15.0	30.0	60.0	1.50	x	x
—	10 MHz		—	—	20 MHz		10 MHz	10 MHz	20 MHz	15.0	15.0	30.0	60.0	1.50	x	x
—	—	—	10 MHz		20 MHz		10 MHz	10 MHz	20 MHz	15.0	15.0	30.0	60.0	1.50	x	x
10 MHz		—	—	—	20 MHz		10 MHz	10 MHz	20 MHz	15.0	15.0	30.0	60.0	1.50	x	x
—	10 MHz		—	—	20 MHz		10 MHz	10 MHz	20 MHz	15.0	15.0	30.0	60.0	1.50	x	x
—	—	—	10 MHz		20 MHz		10 MHz	10 MHz	20 MHz	15.0	15.0	30.0	60.0	1.50	x	x
10 MHz		—	10 MHz		20 MHz		10 MHz	10 MHz	20 MHz	15.0	15.0	30.0	60.0	1.50	x	x
—	10 MHz		10 MHz		20 MHz		10 MHz	10 MHz	20 MHz	15.0	15.0	30.0	60.0	1.50	x	x
—	—	—	—	—	20 MHz		10 MHz	15 MHz[7]	20 MHz	13.3	20.0	26.7	60.0	1.33	x	x
—	—	—	—	—	20 MHz		10 MHz	15 MHz[7]	20 MHz	13.3	20.0	26.7	60.0	1.33	x	x
—	—	—	—	—	20 MHz		10 MHz	15 MHz[7]	20 MHz	13.3	20.0	26.7	60.0	1.33	x	x
15 MHz[7]	—	—	—	—	20 MHz		10 MHz	15 MHz[7]	20 MHz	13.3	20.0	26.7	60.0	1.33	x	x
15 MHz[7]			—	—	20 MHz		10 MHz	15 MHz[7]	20 MHz	13.3	20.0	26.7	60.0	1.33	x	x
—	—	15 MHz[7]			20 MHz		10 MHz	15 MHz[7]	20 MHz	13.3	20.0	26.7	60.0	1.33	x	x
—	—	—	—	—	20 MHz		10 MHz	15 MHz[7]	20 MHz	13.3	20.0	26.7	60.0	1.33	x	x
—	—	—	—	—	20 MHz		10 MHz	15 MHz[7]	20 MHz	13.3	20.0	26.7	60.0	1.33	x	x
15 MHz[7]	—	—	—	—	20 MHz		10 MHz	15 MHz[7]	20 MHz	13.3	20.0	26.7	60.0	1.33	x	x
15 MHz[7]			—	—	20 MHz		10 MHz	15 MHz[7]	20 MHz	13.3	20.0	26.7	60.0	1.33	x	x
—	—	15 MHz[7]			20 MHz		10 MHz	15 MHz[7]	20 MHz	13.3	20.0	26.7	60.0	1.33	x	x
—	—	—	—	—	20 MHz		10 MHz	15 MHz[7]	20 MHz	13.3	20.0	26.7	60.0	1.33	x	x
15 MHz[7]	—	—	—	—	20 MHz		10 MHz	15 MHz[7]	20 MHz	13.3	20.0	26.7	60.0	1.33	x	x
15 MHz[7]			—	—	20 MHz		10 MHz	15 MHz[7]	20 MHz	13.3	20.0	26.7	60.0	1.33	x	x

Table 10 (Cont.)
Downlink (n66)

AWS-3 G[1]	AWS-3 H[2]	AWS-3 I[3]	AWS-3 J[4]		AWS-4 A[5]	AWS-4 B[6]	Carrier BW (MHz)			Carrier Power (W])			Total Power	Power Density	Default	Max
							C0	C1	C2	C0	C1	C2	(W)	(W/ MHz)		
—	—	15 MHz[7]			20 MHz		10 MHz	15 MHz[7]	20 MHz	13.3	20.0	26.7	60.0	1.33	x	x
—	—	—	—	—	20 MHz		10 MHz	15 MHz[7]	20 MHz	13.3	20.0	26.7	60.0	1.33	x	x
15 MHz[7]	—	—	—	—	20 MHz		10 MHz	15 MHz[7]	20 MHz	13.3	20.0	26.7	60.0	1.33	x	x
15 MHz[7]			—	—	20 MHz		10 MHz	15 MHz[7]	20 MHz	13.3	20.0	26.7	60.0	1.33	x	x
—	—	15 MHz[7]			20 MHz		10 MHz	15 MHz[7]	20 MHz	13.3	20.0	26.7	60.0	1.33	x	x
—	—	—	—	—	20 MHz		10 MHz	15 MHz[7]	20 MHz	13.3	20.0	26.7	60.0	1.33	x	x
15 MHz[7]			—	—	20 MHz		10 MHz	15 MHz[7]	20 MHz	13.3	20.0	26.7	60.0	1.33	x	x
—	—	15 MHz[7]			20 MHz		10 MHz	15 MHz[7]	20 MHz	13.3	20.0	26.7	60.0	1.33	x	x
10 MHz		—	—	—	20 MHz		10 MHz	15 MHz[7]	20 MHz	13.3	20.0	26.7	60.0	1.33	x	x
10 MHz		—	—	—	20 MHz		10 MHz	15 MHz[7]	20 MHz	13.3	20.0	26.7	60.0	1.33	x	x
10 MHz		—	—	—	20 MHz		10 MHz	15 MHz[7]	20 MHz	13.3	20.0	26.7	60.0	1.33	x	x
10 MHz		15 MHz[7]			20 MHz		10 MHz	15 MHz[7]	20 MHz	13.3	20.0	26.7	60.0	1.33	x	x
—	10 MHz		—	—	20 MHz		10 MHz	15 MHz[7]	20 MHz	13.3	20.0	26.7	60.0	1.33	x	x
—	10 MHz		—	—	20 MHz		10 MHz	15 MHz[7]	20 MHz	13.3	20.0	26.7	60.0	1.33	x	x
—	10 MHz		—	—	20 MHz		10 MHz	15 MHz[7]	20 MHz	13.3	20.0	26.7	60.0	1.33	x	x
15 MHz[7]	10 MHz		—	—	20 MHz		10 MHz	15 MHz[7]	20 MHz	13.3	20.0	26.7	60.0	1.33	x	x
—	—	—	10 MHz		20 MHz		10 MHz	15 MHz[7]	20 MHz	13.3	20.0	26.7	60.0	1.33	x	x
—	—	—	10 MHz		20 MHz		10 MHz	15 MHz[7]	20 MHz	13.3	20.0	26.7	60.0	1.33	x	x
—	—	—	10 MHz		20 MHz		10 MHz	15 MHz[7]	20 MHz	13.3	20.0	26.7	60.0	1.33	x	x
15 MHz[7]	—	—	10 MHz		20 MHz		10 MHz	15 MHz[7]	20 MHz	13.3	20.0	26.7	60.0	1.33	x	x
15 MHz[7]			10 MHz		20 MHz		10 MHz	15 MHz[7]	20 MHz	13.3	20.0	26.7	60.0	1.33	x	x
—	—	—	—	—	20 MHz		10 MHz	20 MHz	20 MHz	12.0	24.0	24.0	60.0	1.20	x	x
—	—	—	—	—	20 MHz		10 MHz	20 MHz	20 MHz	12.0	24.0	24.0	60.0	1.20	x	x
20 MHz		—	—	—	20 MHz		10 MHz	20 MHz	20 MHz	12.0	24.0	24.0	60.0	1.20	x	x
—	20 MHz				20 MHz		10 MHz	20 MHz	20 MHz	12.0	24.0	24.0	60.0	1.20	x	x
—	—	—	—	—	20 MHz		10 MHz	20 MHz	20 MHz	12.0	24.0	24.0	60.0	1.20	x	x
20 MHz		—	—	—	20 MHz		10 MHz	20 MHz	20 MHz	12.0	24.0	24.0	60.0	1.20	x	x
—	20 MHz				20 MHz		10 MHz	20 MHz	20 MHz	12.0	24.0	24.0	60.0	1.20	x	x
—	—	—	—	—	20 MHz		10 MHz	20 MHz	20 MHz	12.0	24.0	24.0	60.0	1.20	x	x
20 MHz		—	—	—	20 MHz		10 MHz	20 MHz	20 MHz	12.0	24.0	24.0	60.0	1.20	x	x
—	20 MHz				20 MHz		10 MHz	20 MHz	20 MHz	12.0	24.0	24.0	60.0	1.20	x	x

Table 10 (Cont.)
Downlink (n66)

AWS-3 G[1]	AWS-3 H[2]	AWS-3 I[3]	AWS-3 J[4]		AWS-4 A[5]	AWS-4 B[6]	Carrier BW (MHz)			Carrier Power (W])			Total Power	Power Density	Default	Max
							C0	C1	C2	C0	C1	C2	(W)	(W/ MHz)		
—	—	—	—	—	20 MHz		10 MHz	20 MHz	20 MHz	12.0	24.0	24.0	60.0	1.20	x	x
20 MHz		—	—	—	20 MHz		10 MHz	20 MHz	20 MHz	12.0	24.0	24.0	60.0	1.20	x	x
—	20 MHz				20 MHz		10 MHz	20 MHz	20 MHz	12.0	24.0	24.0	60.0	1.20	x	x
—	—	—	—	—	20 MHz		10 MHz	20 MHz	20 MHz	12.0	24.0	24.0	60.0	1.20	x	x
—	—	—	—	—	20 MHz		10 MHz	20 MHz	20 MHz	12.0	24.0	24.0	60.0	1.20	x	x
—	20 MHz				20 MHz		10 MHz	20 MHz	20 MHz	12.0	24.0	24.0	60.0	1.20	x	x
10 MHz		—	—	—	20 MHz		10 MHz	20 MHz	20 MHz	12.0	24.0	24.0	60.0	1.20	x	x
10 MHz		—	—	—	20 MHz		10 MHz	20 MHz	20 MHz	12.0	24.0	24.0	60.0	1.20	x	x
10 MHz		—	—	—	20 MHz		10 MHz	20 MHz	20 MHz	12.0	24.0	24.0	60.0	1.20	x	x
—	10 MHz		—	—	20 MHz		10 MHz	20 MHz	20 MHz	12.0	24.0	24.0	60.0	1.20	x	x
—	10 MHz		—	—	20 MHz		10 MHz	20 MHz	20 MHz	12.0	24.0	24.0	60.0	1.20	x	x
—	10 MHz		—	—	20 MHz		10 MHz	20 MHz	20 MHz	12.0	24.0	24.0	60.0	1.20	x	x
—	—	—	10 MHz		20 MHz		10 MHz	20 MHz	20 MHz	12.0	24.0	24.0	60.0	1.20	x	x
—	—	—	10 MHz		20 MHz		10 MHz	20 MHz	20 MHz	12.0	24.0	24.0	60.0	1.20	x	x
—	—	—	10 MHz		20 MHz		10 MHz	20 MHz	20 MHz	12.0	24.0	24.0	60.0	1.20	x	x
20 MHz		—	10 MHz		20 MHz		10 MHz	20 MHz	20 MHz	12.0	24.0	24.0	60.0	1.20	x	x
—	—	—	—	—	20 MHz		15 MHz[7]	15 MHz[7]	20 MHz	18.0	18.0	24.0	60.0	1.20	x	x
15 MHz[7]	—	—	—	—	20 MHz		15 MHz[7]	15 MHz[7]	20 MHz	18.0	18.0	24.0	60.0	1.20	x	x
15 MHz[7]			—	—	20 MHz		15 MHz[7]	15 MHz[7]	20 MHz	18.0	18.0	24.0	60.0	1.20	x	x
—	—	15 MHz[7]			20 MHz		15 MHz[7]	15 MHz[7]	20 MHz	18.0	18.0	24.0	60.0	1.20	x	x
15 MHz[7]	—	—	—	—	20 MHz		15 MHz[7]	15 MHz[7]	20 MHz	18.0	18.0	24.0	60.0	1.20	x	x
15 MHz[7]			—	—	20 MHz		15 MHz[7]	15 MHz[7]	20 MHz	18.0	18.0	24.0	60.0	1.20	x	x
—	—	15 MHz[7]			20 MHz		15 MHz[7]	15 MHz[7]	20 MHz	18.0	18.0	24.0	60.0	1.20	x	x
15 MHz[7]			—	—	20 MHz		15 MHz[7]	15 MHz[7]	20 MHz	18.0	18.0	24.0	60.0	1.20	x	x
—	—	15 MHz[7]			20 MHz		15 MHz[7]	15 MHz[7]	20 MHz	18.0	18.0	24.0	60.0	1.20	x	x
15 MHz[7]	—	15 MHz[7]			20 MHz		15 MHz[7]	15 MHz[7]	20 MHz	18.0	18.0	24.0	60.0	1.20	x	x
—	—	—	—	—	20 MHz		15 MHz[7]	20 MHz	20 MHz	16.4	21.8	21.8	60.0	1.09	x	x
20 MHz		—	—	—	20 MHz		15 MHz[7]	20 MHz	20 MHz	16.4	21.8	21.8	60.0	1.09	x	x
—	20 MHz				20 MHz		15 MHz[7]	20 MHz	20 MHz	16.4	21.8	21.8	60.0	1.09	x	x
—	—	—	—	—	20 MHz		15 MHz[7]	20 MHz	20 MHz	16.4	21.8	21.8	60.0	1.09	x	x
20 MHz		—	—	—	20 MHz		15 MHz[7]	20 MHz	20 MHz	16.4	21.8	21.8	60.0	1.09	x	x

Table 10 (Cont.)
Downlink (n66)

AWS-3 G[1]	AWS-3 H[2]	AWS-3 I[3]	AWS-3 J[4]		AWS-4 A[5]	AWS-4 B[6]	Carrier BW (MHz)			Carrier Power (W])			Total Power	Power Density	Default	Max
							C0	C1	C2	C0	C1	C2	(W)	(W/ MHz)		
—	20 MHz				20 MHz		15 MHz[7]	20 MHz	20 MHz	16.4	21.8	21.8	60.0	1.09	x	x
—	—	—	—	—	20 MHz		15 MHz[7]	20 MHz	20 MHz	16.4	21.8	21.8	60.0	1.09	x	x
—	—	—	—	—	20 MHz		15 MHz[7]	20 MHz	20 MHz	16.4	21.8	21.8	60.0	1.09	x	x
—	20 MHz				20 MHz		15 MHz[7]	20 MHz	20 MHz	16.4	21.8	21.8	60.0	1.09	x	x
15 MHz[7]	—	—	—	—	20 MHz		15 MHz[7]	20 MHz	20 MHz	16.4	21.8	21.8	60.0	1.09	x	x
15 MHz[7]	—	—	—	—	20 MHz		15 MHz[7]	20 MHz	20 MHz	16.4	21.8	21.8	60.0	1.09	x	x
15 MHz[7]	20 MHz				20 MHz		15 MHz[7]	20 MHz	20 MHz	16.4	21.8	21.8	60.0	1.09	x	x
15 MHz[7]			—	—	20 MHz		15 MHz[7]	20 MHz	20 MHz	16.4	21.8	21.8	60.0	1.09	x	x
15 MHz[7]			—	—	20 MHz		15 MHz[7]	20 MHz	20 MHz	16.4	21.8	21.8	60.0	1.09	x	x
15 MHz[7]			—	—	20 MHz		15 MHz[7]	20 MHz	20 MHz	16.4	21.8	21.8	60.0	1.09	x	x
—	—	15 MHz[7]			20 MHz		15 MHz[7]	20 MHz	20 MHz	16.4	21.8	21.8	60.0	1.09	x	x
—	—	15 MHz[7]			20 MHz		15 MHz[7]	20 MHz	20 MHz	16.4	21.8	21.8	60.0	1.09	x	x
—	—	15 MHz[7]			20 MHz		15 MHz[7]	20 MHz	20 MHz	16.4	21.8	21.8	60.0	1.09	x	x
20 MHz		15 MHz[7]			20 MHz		15 MHz[7]	20 MHz	20 MHz	16.4	21.8	21.8	60.0	1.09	x	x
—	—	—	—	—	20 MHz		20 MHz	20 MHz	20 MHz	20.0	20.0	20.0	60.0	1.00	x	x
20 MHz		—	—	—	20 MHz		20 MHz	20 MHz	20 MHz	20.0	20.0	20.0	60.0	1.00	x	x
—	20 MHz				20 MHz		20 MHz	20 MHz	20 MHz	20.0	20.0	20.0	60.0	1.00	x	x
20 MHz		—	—	—	20 MHz		20 MHz	20 MHz	20 MHz	20.0	20.0	20.0	60.0	1.00	x	x
—	20 MHz				20 MHz		20 MHz	20 MHz	20 MHz	20.0	20.0	20.0	60.0	1.00	x	x
—	20 MHz				20 MHz		20 MHz	20 MHz	20 MHz	20.0	20.0	20.0	60.0	1.00	x	x

1 AWS-3 G: Bandwidth is 2155…2160 nm and frequency is 5 MHz.
2 AWS-3 H: Bandwidth is 2160…2165 nm and frequency is 5 MHz.
3 AWS-3 I: Bandwidth is 2165…2170 nm and frequency is 5 MHz.
4 AWS-3 J: Bandwidth is 2170…2180 nm and frequency is 10 MHz.
5 AWS-4 A: Bandwidth is 2180…2200 nm and frequency is 20 MHz.
6 AWS-4 B: Bandwidth is 2180…2200 nm and frequency is 20 MHz.
7 15 MHz is not currently supported.

Table 11
Uplink (n66)

AWS-1 A[1]		AWS-1 B[2]		AWS-1 C[3]	AWS-1 D[4]	AWS-1 E[5]	AWS-1 F[6]		AWS-3 G[7]	AWS-3 H[8]	AWS-3 I[9]	AWS-3 J[10]	
1C Uplink													
—	—	—	—	—	—	—	—	—	—	—	—	—	—

Table 11 (Cont.)
Uplink (n66)

AWS-1 A[1]		AWS-1 B[2]		AWS-1 C[3]	AWS-1 D[4]	AWS-1 E[5]	AWS-1 F[6]		AWS-3 G[7]	AWS-3 H[8]	AWS-3 I[9]	AWS-3 J[10]	
—	—	—	—	—	—	—	—	—	—	—	—	—	—
2C Uplink													
—	—	—	—	5 MHz	—	—	—	—	—	—	—	—	—
—	—	—	—	5 MHz	—	—	—	—	—	—	—	—	—
—	—	—	—	—	5 MHz	—	—	—	—	—	—	—	—
—	—	—	—	—	5 MHz	—	—	—	—	—	—	—	—
—	—	—	—	—	—	5 MHz	—	—	—	—	—	—	—
—	—	—	—	—	—	5 MHz	—	—	—	—	—	—	—
—	—	—	—	—	—	—	—	—	5 MHz	—	—	—	—
—	—	—	—	—	—	—	—	—	5 MHz	—	—	—	—
—	—	—	—	—	—	—	—	—	—	5 MHz	—	—	—
—	—	—	—	—	—	—	—	—	—	5 MHz	—	—	—
—	—	—	—	—	—	—	—	—	—	—	5 MHz	—	—
—	—	—	—	—	—	—	—	—	—	—	5 MHz	—	—
10 MHz		—	—	—	—	—	—	—	—	—	—	—	—
10 MHz		—	—	—	—	—	—	—	—	—	—	—	—
—	—	10 MHz		—	—	—	—	—	—	—	—	—	—
—	—	10 MHz		—	—	—	—	—	—	—	—	—	—
—	—	—	—	10 MHz		—	—	—	—	—	—	—	—
—	—	—	—	10 MHz		—	—	—	—	—	—	—	—
—	—	—	—	—	10 MHz		—	—	—	—	—	—	—
—	—	—	—	—	10 MHz		—	—	—	—	—	—	—
—	—	—	—	—	—	—	10 MHz		—	—	—	—	—
—	—	—	—	—	—	—	10 MHz		—	—	—	—	—
—	—	—	—	—	—	—	—	—	10 MHz		—	—	—
—	—	—	—	—	—	—	—	—	10 MHz		—	—	—
—	—	—	—	—	—	—	—	—	—	10 MHz		—	—
—	—	—	—	—	—	—	—	—	—	10 MHz		—	—
—	—	—	—	—	—	—	—	—	—	—	—	10 MHz	
—	—	—	—	—	—	—	—	—	—	—	—	10 MHz	
—	—	15 MHz[11]			—	—	—	—	—	—	—	—	—
—	—	15 MHz[11]			—	—	—	—	—	—	—	—	—
—	—	—	—	15 MHz[11]			—	—	—	—	—	—	—

Table 11 (Cont.)
Uplink (n66)

AWS-1 A[1]		AWS-1 B[2]		AWS-1 C[3]	AWS-1 D[4]	AWS-1 E[5]	AWS-1 F[6]		AWS-3 G[7]	AWS-3 H[8]	AWS-3 I[9]	AWS-3 J[10]	
—	—	—	—	15 MHz[11]			—	—	—	—	—	—	—
—	—	—	—	—	—	15 MHz[11]			—	—	—	—	—
—	—	—	—	—	—	15 MHz[11]			—	—	—	—	—
—	—	—	—	—	—	—	15 MHz[11]			—	—	—	—
—	—	—	—	—	—	—	15 MHz[11]			—	—	—	—
—	—	—	—	—	—	—	—	—	15 MHz[11]			—	—
—	—	—	—	—	—	—	—	—	15 MHz[11]			—	—
—	—	—	—	—	—	—	—	—	—	—	15 MHz[11]		
—	—	—	—	—	—	—	—	—	—	—	15 MHz[11]		
20 MHz				—	—	—	—	—	—	—	—	—	—
20 MHz				—	—	—	—	—	—	—	—	—	—
—	—	20 MHz				—	—	—	—	—	—	—	—
—	—	20 MHz				—	—	—	—	—	—	—	—
—	—	—	—	—	—	—	—	—	—	20 MHz			
—	—	—	—	—	—	—	—	—	—	20 MHz			
3C Uplink													
—	—	—	—	5 MHz	5 MHz	—	—	—	—	—	—	—	—
—	—	—	—	5 MHz	—	5 MHz	—	—	—	—	—	—	—
—	—	—	—	5 MHz	—	—	—	—	5 MHz	—	—	—	—
—	—	—	—	5 MHz	—	—	—	—	—	5 MHz	—	—	—
—	—	—	—	5 MHz	—	—	—	—	—	—	5 MHz	—	—
—	—	—	—	—	5 MHz	5 MHz	—	—	—	—	—	—	—
—	—	—	—	—	5 MHz	—	—	—	5 MHz	—	—	—	—
—	—	—	—	—	5 MHz	—	—	—	—	5 MHz	—	—	—
—	—	—	—	—	5 MHz	—	—	—	—	—	5 MHz	—	—
—	—	—	—	—	—	5 MHz	—	—	5 MHz	—	—	—	—
—	—	—	—	—	—	5 MHz	—	—	—	5 MHz	—	—	—
—	—	—	—	—	—	5 MHz	—	—	—	—	5 MHz	—	—
—	—	—	—	—	—	—	—	—	5 MHz	5 MHz	—	—	—
—	—	—	—	—	—	—	—	—	5 MHz	—	5 MHz	—	—
—	—	—	—	—	—	—	—	—	—	5 MHz	5 MHz	—	—
10 MHz		—	—	5 MHz	—	—	—	—	—	—	—	—	—
—	—	10 MHz		5 MHz	—	—	—	—	—	—	—	—	—

Table 11 (Cont.)
Uplink (n66)

AWS-1 A[1]		AWS-1 B[2]		AWS-1 C[3]	AWS-1 D[4]	AWS-1 E[5]	AWS-1 F[6]		AWS-3 G[7]	AWS-3 H[8]	AWS-3 I[9]	AWS-3 J[10]	
—	—	—	—	5 MHz	10 MHz		—	—	—	—	—	—	—
—	—	—	—	5 MHz	—	—	10 MHz		—	—	—	—	—
—	—	—	—	5 MHz	—	—	—	—	10 MHz		—	—	—
—	—	—	—	5 MHz	—	—	—	—	—	10 MHz		—	—
—	—	—	—	5 MHz	—	—	—	—	—	—	—	10 MHz	
10 MHz		—	—	—	5 MHz	—	—	—	—	—	—	—	—
—	—	10 MHz		—	5 MHz	—	—	—	—	—	—	—	—
—	—	—	—	—	5 MHz	—	10 MHz		—	—	—	—	—
—	—	—	—	—	5 MHz	—	—	—	10 MHz		—	—	—
—	—	—	—	—	5 MHz	—	—	—	—	10 MHz		—	—
—	—	—	—	—	5 MHz	—	—	—	—	—	—	10 MHz	
10 MHz		—	—	—	—	5 MHz	—	—	—	—	—	—	—
—	—	10 MHz		—	—	5 MHz	—	—	—	—	—	—	—
—	—	—	—	10 MHz		5 MHz	—	—	—	—	—	—	—
—	—	—	—	—	—	5 MHz	10 MHz		—	—	—	—	—
—	—	—	—	—	—	5 MHz	—	—	10 MHz		—	—	—
—	—	—	—	—	—	5 MHz	—	—	—	10 MHz		—	—
—	—	—	—	—	—	5 MHz	—	—	—	—	—	10 MHz	
10 MHz		—	—	—	—	—	—	—	5 MHz	—	—	—	—
—	—	10 MHz		—	—	—	—	—	5 MHz	—	—	—	—
—	—	—	—	10 MHz		—	—	—	5 MHz	—	—	—	—
—	—	—	—	—	10 MHz		—	—	5 MHz	—	—	—	—
—	—	—	—	—	—	—	10 MHz		5 MHz	—	—	—	—
—	—	—	—	—	—	—	—	—	5 MHz	10 MHz		—	—
—	—	—	—	—	—	—	—	—	5 MHz	—	—	10 MHz	
10 MHz		—	—	—	—	—	—	—	—	5 MHz	—	—	—
—	—	10 MHz		—	—	—	—	—	—	5 MHz	—	—	—
—	—	—	—	10 MHz		—	—	—	—	5 MHz	—	—	—
—	—	—	—	—	10 MHz		—	—	—	5 MHz	—	—	—
—	—	—	—	—	—	—	10 MHz		—	5 MHz	—	—	—
—	—	—	—	—	—	—	—	—	—	5 MHz	—	10 MHz	
10 MHz		—	—	—	—	—	—	—	—	—	5 MHz	—	—
—	—	10 MHz		—	—	—	—	—	—	—	5 MHz	—	—

Table 11 (Cont.)
Uplink (n66)

AWS-1 A[1]		AWS-1 B[2]		AWS-1 C[3]	AWS-1 D[4]	AWS-1 E[5]	AWS-1 F[6]		AWS-3 G[7]	AWS-3 H[8]	AWS-3 I[9]	AWS-3 J[10]	
—	—	—	—	10 MHz		—	—	—	—	—	5 MHz	—	—
—	—	—	—	—	10 MHz		—	—	—	—	5 MHz	—	—
—	—	—	—	—	—	—	10 MHz		—	—	5 MHz	—	—
—	—	—	—	—	—	—	—	—	10 MHz		5 MHz	—	—
—	—	—	—	—	—	—	—	—	—	—	5 MHz	10 MHz	
—	—	—	—	5 MHz	—	15 MHz[11]			—	—	—	—	—
—	—	—	—	5 MHz	—	—	15 MHz[11]			—	—	—	—
—	—	—	—	5 MHz	—	—	—	—	15 MHz[11]			—	—
—	—	—	—	5 MHz	—	—	—	—	—	—	15 MHz[11]		
—	—	15 MHz[11]			5 MHz	—	—	—	—	—	—	—	—
—	—	—	—	—	5 MHz	15 MHz[11]			—	—	—	—	—
—	—	—	—	—	5 MHz	—	15 MHz[11]			—	—	—	—
—	—	—	—	—	5 MHz	—	—	—	15 MHz[11]			—	—
—	—	—	—	—	5 MHz	—	—	—	—	—	15 MHz[11]		
—	—	15 MHz[11]			—	5 MHz	—	—	—	—	—	—	—
—	—	—	—	—	—	5 MHz	15 MHz[11]			—	—	—	—
—	—	—	—	—	—	5 MHz	—	—	15 MHz[11]			—	—
—	—	—	—	—	—	5 MHz	—	—	—	—	15 MHz[11]		
—	—	15 MHz[11]			—	—	—	—	5 MHz	—	—	—	—
—	—	—	—	15 MHz[11]			—	—	5 MHz	—	—	—	—
—	—	—	—	—	—	15 MHz[11]			5 MHz	—	—	—	—
—	—	—	—	—	—	—	—	—	5 MHz	—	15 MHz[11]		
—	—	15 MHz[11]			—	—	—	—	—	5 MHz	—	—	—
—	—	—	—	15 MHz[11]			—	—	—	5 MHz	—	—	—
—	—	—	—	—	—	15 MHz[11]			—	5 MHz	—	—	—
—	—	—	—	—	—	—	15 MHz[11]			5 MHz	—	—	—
—	—	—	—	—	—	—	—	—	—	5 MHz	15 MHz[11]		
—	—	15 MHz[11]			—	—	—	—	—	—	5 MHz	—	—
—	—	—	—	15 MHz[11]			—	—	—	—	5 MHz	—	—
—	—	—	—	—	—	15 MHz[11]			—	—	5 MHz	—	—
—	—	—	—	—	—	—	15 MHz[11]			—	5 MHz	—	—
20 MHz				5 MHz	—	—	—	—	—	—	—	—	—
—	—	—	—	5 MHz	20 MHz				—	—	—	—	—

Table 11 (Cont.)
Uplink (n66)

AWS-1 A[1]		AWS-1 B[2]		AWS-1 C[3]	AWS-1 D[4]	AWS-1 E[5]	AWS-1 F[6]		AWS-3 G[7]	AWS-3 H[8]	AWS-3 I[9]	AWS-3 J[10]	
—	—	—	—	5 MHz	—	—	20 MHz				—	—	—
—	—	—	—	5 MHz	—	—	—	—	—	20 MHz			
20 MHz				—	5 MHz	—	—	—	—	—	—	—	—
—	—	—	—	—	5 MHz	—	20 MHz				—	—	—
—	—	—	—	—	5 MHz	—	—	—	—	20 MHz			
20 MHz				—	—	5 MHz	—	—	—	—	—	—	—
—	—	20 MHz				5 MHz	—	—	—	—	—	—	—
—	—	—	—	—	—	5 MHz	20 MHz				—	—	—
—	—	—	—	—	—	5 MHz	—	—	—	20 MHz			
20 MHz				—	—	—	—	—	5 MHz	—	—	—	—
—	—	20 MHz				—	—	—	5 MHz	—	—	—	—
—	—	—	—	—	20 MHz				5 MHz	—	—	—	—
—	—	—	—	—	—	—	—	—	5 MHz	20 MHz			
20 MHz				—	—	—	—	—	—	5 MHz	—	—	—
—	—	20 MHz				—	—	—	—	5 MHz	—	—	—
—	—	—	—	—	20 MHz				—	5 MHz	—	—	—
20 MHz				—	—	—	—	—	—	—	5 MHz	—	—
—	—	20 MHz				—	—	—	—	—	5 MHz	—	—
—	—	—	—	—	20 MHz				—	—	5 MHz	—	—
—	—	—	—	—	—	—	20 MHz				5 MHz	—	—
10 MHz		10 MHz		—	—	—	—	—	—	—	—	—	—
10 MHz		—	—	10 MHz		—	—	—	—	—	—	—	—
10 MHz		—	—	—	10 MHz		—	—	—	—	—	—	—
10 MHz		—	—	—	—	—	10 MHz		—	—	—	—	—
10 MHz		—	—	—	—	—	—	—	10 MHz		—	—	—
10 MHz		—	—	—	—	—	—	—	—	10 MHz		—	—
10 MHz		—	—	—	—	—	—	—	—	—	—	10 MHz	
—	—	10 MHz		10 MHz		—	—	—	—	—	—	—	—
—	—	10 MHz		—	10 MHz		—	—	—	—	—	—	—
—	—	10 MHz		—	—	—	10 MHz		—	—	—	—	—
—	—	10 MHz		—	—	—	—	—	10 MHz		—	—	—
—	—	10 MHz		—	—	—	—	—	—	10 MHz		—	—
—	—	10 MHz		—	—	—	—	—	—	—	—	10 MHz	

Table 11 (Cont.)
Uplink (n66)

AWS-1 A[1]		AWS-1 B[2]		AWS-1 C[3]	AWS-1 D[4]	AWS-1 E[5]	AWS-1 F[6]		AWS-3 G[7]	AWS-3 H[8]	AWS-3 I[9]	AWS-3 J[10]	
—	—	—	—	10 MHz		—	10 MHz		—	—	—	—	—
—	—	—	—	10 MHz		—	—	—	10 MHz		—	—	—
—	—	—	—	10 MHz		—	—	—	—	10 MHz		—	—
—	—	—	—	10 MHz		—	—	—	—	—	—	10 MHz	
—	—	—	—	—	10 MHz		10 MHz		—	—	—	—	—
—	—	—	—	—	10 MHz		—	—	10 MHz		—	—	—
—	—	—	—	—	10 MHz		—	—	—	10 MHz		—	—
—	—	—	—	—	10 MHz		—	—	—	—	—	10 MHz	
—	—	—	—	—	—	—	10 MHz		10 MHz		—	—	—
—	—	—	—	—	—	—	10 MHz		—	10 MHz		—	—
—	—	—	—	—	—	—	10 MHz		—	—	—	10 MHz	
—	—	—	—	—	—	—	—	—	10 MHz		—	10 MHz	
—	—	—	—	—	—	—	—	—	—	10 MHz		10 MHz	
10 MHz		15 MHz[11]			—	—	—	—	—	—	—	—	—
10 MHz		—	—	15 MHz[11]			—	—	—	—	—	—	—
10 MHz		—	—	—	—	15 MHz[11]			—	—	—	—	—
10 MHz		—	—	—	—	—	15 MHz[11]			—	—	—	—
10 MHz		—	—	—	—	—	—	—	15 MHz[11]			—	—
10 MHz		—	—	—	—	—	—	—	—	—	15 MHz[11]		
—	—	10 MHz		15 MHz[11]			—	—	—	—	—	—	—
—	—	10 MHz		—	—	15 MHz[11]			—	—	—	—	—
—	—	10 MHz		—	—	—	15 MHz[11]			—	—	—	—
—	—	10 MHz		—	—	—	—	—	15 MHz[11]			—	—
—	—	10 MHz		—	—	—	—	—	—	—	15 MHz[11]		
—	—	—	—	10 MHz		15 MHz[11]			—	—	—	—	—
—	—	—	—	10 MHz		—	15 MHz[11]			—	—	—	—
—	—	—	—	10 MHz		—	—	—	15 MHz[11]			—	—
—	—	—	—	10 MHz		—	—	—	—	—	15 MHz[11]		
—	—	15 MHz[11]			10 MHz		—	—	—	—	—	—	—
—	—	—	—	—	10 MHz		15 MHz[11]			—	—	—	—
—	—	—	—	—	10 MHz		—	—	15 MHz[11]			—	—
—	—	—	—	—	10 MHz		—	—	—	—	15 MHz[11]		
—	—	15 MHz[11]			—	—	10 MHz		—	—	—	—	—

Table 11 (Cont.)
Uplink (n66)

AWS-1 A[1]		AWS-1 B[2]		AWS-1 C[3]	AWS-1 D[4]	AWS-1 E[5]	AWS-1 F[6]		AWS-3 G[7]	AWS-3 H[8]	AWS-3 I[9]	AWS-3 J[10]	
—	—	—	—	—	—	—	10 MHz		15 MHz[11]			—	—
—	—	—	—	—	—	—	10 MHz		—	—	15 MHz[11]		
—	—	15 MHz[11]			—	—	—	—	10 MHz		—	—	—
—	—	—	—	15 MHz[11]			—	—	10 MHz		—	—	—
—	—	—	—	—	—	15 MHz[11]			10 MHz		—	—	—
—	—	—	—	—	—	—	—	—	10 MHz		15 MHz[11]		
—	—	15 MHz[11]			—	—	—	—	—	10 MHz		—	—
—	—	—	—	15 MHz[11]			—	—	—	10 MHz		—	—
—	—	—	—	—	—	15 MHz[11]			—	10 MHz		—	—
—	—	—	—	—	—	—	15 MHz[11]			10 MHz		—	—
—	—	15 MHz[11]			—	—	—	—	—	—	—	10 MHz	
—	—	—	—	15 MHz[11]			—	—	—	—	—	10 MHz	
—	—	—	—	—	—	15 MHz[11]			—	—	—	10 MHz	
—	—	—	—	—	—	—	15 MHz[11]			—	—	10 MHz	
—	—	—	—	—	—	—	—	—	15 MHz[11]			10 MHz	
10 MHz		20 MHz				—	—	—	—	—	—	—	—
10 MHz		—	—	—	20 MHz				—	—	—	—	—
10 MHz		—	—	—	—	—	20 MHz				—	—	—
10 MHz		—	—	—	—	—	—	—	—	20 MHz			
—	—	10 MHz		—	20 MHz				—	—	—	—	—
—	—	10 MHz		—	—	—	20 MHz				—	—	—
—	—	10 MHz		—	—	—	—	—	—	20 MHz			
20 MHz				10 MHz		—	—	—	—	—	—	—	—
—	—	—	—	10 MHz		—	20 MHz				—	—	—
—	—	—	—	10 MHz		—	—	—	—	20 MHz			
20 MHz				—	10 MHz		—	—	—	—	—	—	—
—	—	—	—	—	10 MHz		20 MHz				—	—	—
—	—	—	—	—	10 MHz		—	—	—	20 MHz			
20 MHz				—	—	—	10 MHz		—	—	—	—	—
—	—	20 MHz				—	10 MHz		—	—	—	—	—
—	—	—	—	—	—	—	10 MHz		—	20 MHz			
20 MHz				—	—	—	—	—	10 MHz		—	—	—
—	—	20 MHz				—	—	—	10 MHz		—	—	—

Table 11 (Cont.)
Uplink (n66)

AWS-1 A[1]		AWS-1 B[2]		AWS-1 C[3]	AWS-1 D[4]	AWS-1 E[5]	AWS-1 F[6]		AWS-3 G[7]	AWS-3 H[8]	AWS-3 I[9]	AWS-3 J[10]	
—	—	—	—	—	20 MHz				10 MHz		—	—	—
20 MHz				—	—	—	—	—	—	10 MHz		—	—
—	—	20 MHz				—	—	—	—	10 MHz		—	—
—	—	—	—	—	20 MHz				—	10 MHz		—	—
20 MHz				—	—	—	—	—	—	—	—	10 MHz	
—	—	20 MHz				—	—	—	—	—	—	10 MHz	
—	—	—	—	—	20 MHz				—	—	—	10 MHz	
—	—	—	—	—	—	—	20 MHz				—	10 MHz	
—	—	15 MHz[11]			—	15 MHz[11]			—	—	—	—	—
—	—	15 MHz[11]			—	—	15 MHz[11]			—	—	—	—
—	—	15 MHz[11]			—	—	—	—	15 MHz[11]			—	—
—	—	15 MHz[11]			—	—	—	—	—	—	15 MHz[11]		
—	—	—	—	15 MHz[11]			15 MHz[11]			—	—	—	—
—	—	—	—	15 MHz[11]			—	—	15 MHz[11]			—	—
—	—	—	—	15 MHz[11]			—	—	—	—	15 MHz[11]		
—	—	—	—	—	—	15 MHz[11]			15 MHz[11]			—	—
—	—	—	—	—	—	15 MHz[11]			—	—	15 MHz[11]		
—	—	—	—	—	—	—	15 MHz[11]			—	15 MHz[11]		
—	—	15 MHz[11]			20 MHz				—	—	—	—	—
—	—	15 MHz[11]			—	—	20 MHz				—	—	—
—	—	15 MHz[11]			—	—	—	—	—	20 MHz			
20 MHz				15 MHz[11]			—	—	—	—	—	—	—
—	—	—	—	15 MHz[11]			20 MHz				—	—	—
—	—	—	—	15 MHz[11]			—	—	—	20 MHz			
20 MHz				—	—	15 MHz[11]			—	—	—	—	—
—	—	20 MHz				15 MHz[11]			—	—	—	—	—
—	—	—	—	—	—	15 MHz[11]			—	20 MHz			
20 MHz				—	—	—	15 MHz[11]			—	—	—	—
—	—	20 MHz				—	15 MHz[11]			—	—	—	—
—	—	—	—	—	—	—	15 MHz[11]			20 MHz			
20 MHz				—	—	—	—	—	15 MHz[11]			—	—
—	—	20 MHz				—	—	—	15 MHz[11]			—	—
—	—	—	—	—	20 MHz				15 MHz[11]			—	—

Table 11 (Cont.)
Uplink (n66)

AWS-1 A[1]		AWS-1 B[2]		AWS-1 C[3]	AWS-1 D[4]	AWS-1 E[5]	AWS-1 F[6]		AWS-3 G[7]	AWS-3 H[8]	AWS-3 I[9]	AWS-3 J[10]	
20 MHz				—	—	—	—	—	—	—	15 MHz[11]		
—	—	20 MHz				—	—	—	—	—	15 MHz[11]		
—	—	—	—	—	20 MHz				—	—	15 MHz[11]		
—	—	—	—	—	—	—	20 MHz				15 MHz[11]		
20 MHz				—	20 MHz				—	—	—	—	—
20 MHz				—	—	—	20 MHz				—	—	—
20 MHz				—	—	—	—	—	—	20 MHz			
—	—	20 MHz				—	20 MHz				—	—	—
—	—	20 MHz				—	—	—	—	20 MHz			
—	—	—	—	—	20 MHz				—	20 MHz			

1 AWS-1 A: Bandwidth is 1710…1720 nm and frequency is 10 MHz.
2 AWS-1 B: Bandwidth is 1720…1730 nm and frequency is 10 MHz.
3 AWS-1 C: Bandwidth is 1730…1735 nm and frequency is 5 MHz.
4 AWS-1 D: Bandwidth is 1735…1740 nm and frequency is 5 MHz.
5 AWS-1 E: Bandwidth is 1740…1745 nm and frequency is 5 MHz.
6 AWS-1 F: Bandwidth is 1745…1755 nm and frequency is 10 MHz.
7 AWS-3 G: Bandwidth is 1755…1760 nm and frequency is 5 MHz.
8 AWS-3 H: Bandwidth is 1760…1765 nm and frequency is 5 MHz.
9 AWS-3 I: Bandwidth is 1765…1770 nm and frequency is 5 MHz.
10 AWS-3 J: Bandwidth is 1770…1780 nm and frequency is 10 MHz.
11 15 MHz is not currently supported.

Table 12
2 W/MHz, n70 (Max. 40 W/Antenna, up to 2 Carriers)

Carrier Configuration			Max. output power/antenna				Output (4ANT)
Occupied Bandwidth (OBW)	Carrier 1	Carrier 2	1	2	3	4	
20 MHz	20 MHz	—	40 W				160 W
20 MHz	15 MHz	5 MHz	30 W + 10 W				160 W
20 MHz	10 MHz	10 MHz	20 W + 20 W				160 W
15 MHz	15 MHz	—	30 W				120 W
15 MHz	10 MHz	5 MHz	20 W + 10 W				120 W
10 MHz	10 MHz	—	20 W				80 W
10 MHz	5 MHz	5 MHz	10 W + 10 W				80 W
5 MHz	5 MHz	—	10 W				40 W

Table 13
1 W/MHz, n66 (Max 60 W, up to 3 Carriers)

Carrier Configuration				Max. output power/antenna				Output (4ANT)
OBW	Carrier 1	Carrier 2	Carrier 3	1	2	3	4	
60 MHz	20 MHz	20 MHz	20 MHz	20 W + 20 W + 20 W				240 W
55 MHz	20 MHz	20 MHz	15 MHz	20 W + 20 W + 15 W				220 W
50 MHz	20 MHz	20 MHz	10 MHz	20 W + 20 W + 10 W				200 W
50 MHz	20 MHz	15 MHz	15 MHz	20 W + 15 W + 15 W				200 W
45 MHz	20 MHz	20 MHz	5 MHz	20 W + 20 W + 5 W				180 W
45 MHz	20 MHz	15 MHz	10 MHz	20 W + 15 W + 10 W				180 W
45 MHz	15 MHz	15 MHz	15 MHz	15 W + 15 W + 15 W				180 W
40 MHz	20 MHz	20 MHz	—	20 W + 20 W				160 W
40 MHz	20 MHz	15 MHz	5 MHz	20 W + 15 W + 5 W				160 W
40 MHz	20 MHz	10 MHz	10 MHz	20 W + 10 W + 10 W				160 W
40 MHz	15 MHz	15 MHz	10 MHz	15 W + 15 W + 10 W				160 W
35 MHz	20 MHz	15 MHz	—	20 W + 15 W				140 W
35 MHz	20 MHz	10 MHz	5 MHz	20 W + 10 W + 5 W				140 W
35 MHz	15 MHz	15 MHz	5 MHz	15 W + 15 W + 5 W				140 W
35 MHz	15 MHz	10 MHz	10 MHz	15 W + 10 W + 10 W				140 W
30 MHz	20 MHz	10 MHz	—	20 W + 10 W				120 W
30 MHz	20 MHz	5 MHz	5 MHz	20 W + 5 W + 5 W				120 W
30 MHz	15 MHz	15 MHz	—	15 W + 15 W				120 W
30 MHz	15 MHz	10 MHz	5 MHz	15 W + 10 W + 5 W				120 W
30 MHz	10 MHz	10 MHz	10 MHz	10 W + 10 W + 10 W				120 W
25 MHz	20 MHz	5 MHz	—	20 W + 5 W				100 W
25 MHz	15 MHz	10 MHz	—	15 W + 10 W				100 W
25 MHz	15 MHz	5 MHz	5 MHz	15 W + 5 W + 5 W				100 W
25 MHz	10 MHz	10 MHz	5 MHz	10 W + 10 W + 5 W				100 W
20 MHz	20 MHz	—	—	20 W				80 W
20 MHz	15 MHz	5 MHz	—	15 W + 5 W				80 W
20 MHz	10 MHz	10 MHz	—	10 W + 10 W				80 W

Table 13 (Cont.)
1 W/MHz, n66 (Max 60 W, up to 3 Carriers)

Carrier Configuration				Max. output power/antenna				Output (4ANT)
OBW	Carrier 1	Carrier 2	Carrier 3	1	2	3	4	
20 MHz	10 MHz	5 MHz	5 MHz	10 W + 5 W + 5 W				80 W
15 MHz	15 MHz	—	—	15 W				60 W
15 MHz	10 MHz	5 MHz	—	10 W + 5 W				60 W
15 MHz	5 MHz	5 MHz	5 MHz	5 W + 5 W + 5 W				60 W
10 MHz	10 MHz	—	—	10 W				40 W
10 MHz	5 MHz	5 MHz	—	5 W + 5 W				40 W
5 MHz	5 MHz	—	—	5 W				20 W

2.6
Functional Block Diagram

The following figure shows a functional diagram of the RU.

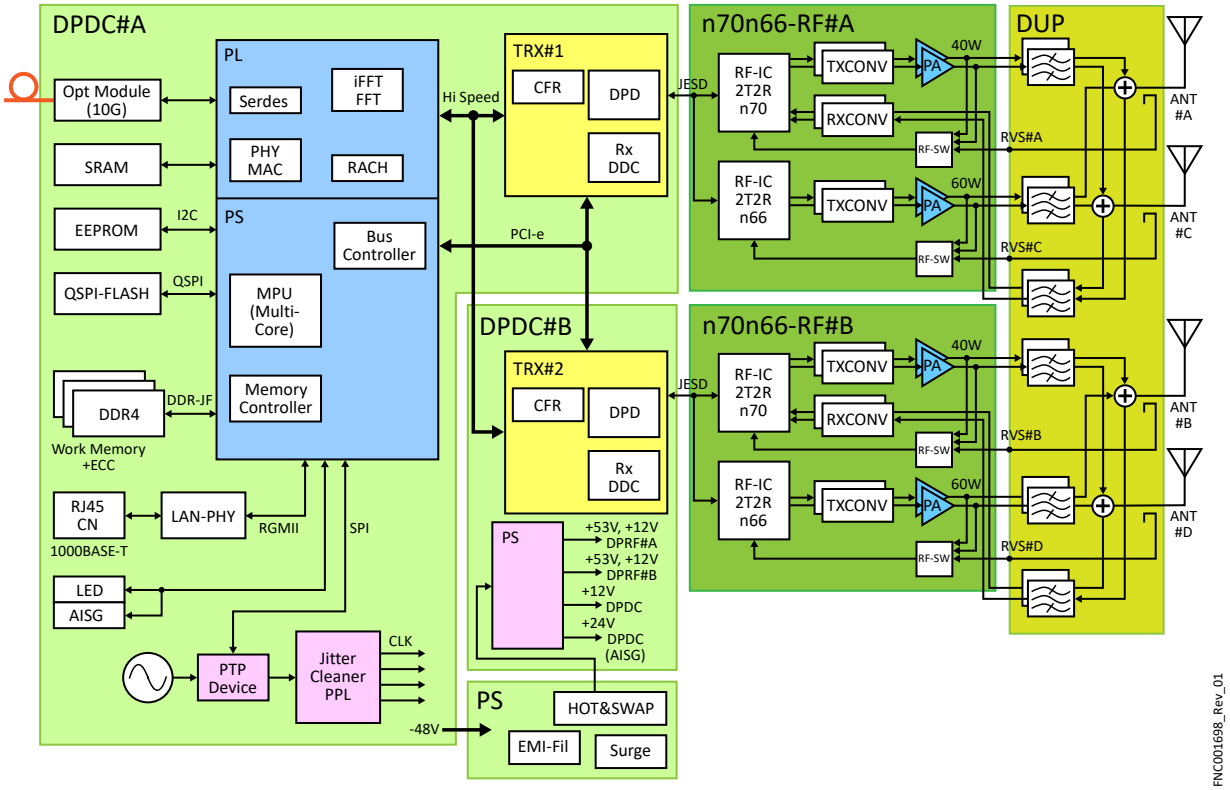

Figure 5
Functional Diagram

Table 14
Description of Function Block

Function Block	Name	Function
DPDC#A	Digital Pre-Distortion Central unit#A	▪ DPDC#A monitors and controls each interface in the RU by LLB. It has a Digital Pre-Distortion (DPD) and Crest Factor Reduction (CFR) control function for PA of n70n66-RF#A. ▪ The eCPRI block in the LLB has a Serdes interface with the optical module and a PHY/MAC unit that constructs the frame format of the C/U/S/M-Plane. ▪ The iFFT/FFT block performs IQ conversion/inverse conversion of the uplink ad downlink U-planes. ▪ The RACH Block is a processing function for the random access channel.

Table 14 (Cont.)
Description of Function Block

Function Block	Name	Function
DPDC#B	Digital Pre-Distortion Central unit#B	▪ DPDC#B has a Power Supply (PS) function for the RU. It has a DPD and CFR control function for PA of n70n66-RF#B.
n70n66-RF	n70n66-RF#A n70n66-RF#B	▪ A transmission RF signal from the RF-IC is amplified by a power amplifier (PA) for each band. ▪ A received RF signal from a duplexer is amplified by a Low Noise Amplifier (LNA). ▪ Transmission digital signal from TRX is converted into a transmission RF signal after performing D/A conversion and orthogonal modulation at RF-IC and Received RF signal from a duplexer is demodulated and A/D converted, and the received digital signal is an output to TRX.
DUP	Duplexer	▪ The RF signals of each frequency bands (n70, n66) are combined and separated, and the frequency bands of the transmitted RF signal and the received RF signal are passed and the out-of-band components are removed.
PS	Power Supply	▪ Provides necessary power voltage to the RU from a DC power supply input (DC-36.0 V…–58.0 V).
TRX	Transmitter and Receiver	▪ It has a high-speed data (baseband signals) interface of LLB. It also has an interface with the Radio Frequency Integrated Circuit (RFIC), to perform DPD and CFR processing of the transmission signal and Digital Down Conversion (DDC) processing of the received RF signal.
LLB	Lower Layer Baseband	▪ IQ signals in Lower Layer Split (LLS) and monitoring signals are transmitted between a higher NR system CU device and TRX by an optical fiber according to an eCPRI format.

2.7 External Interface

In this section:

2.7.1 RF Ports
2.7.2 Optical Port
2.7.3 DC Power and Ground Ports
2.7.4 RET Port
2.7.5 Debug/Test Port
2.7.6 Maintenance Interface

2.7.1 RF Ports

The RU has four RF ports, which both n70 and n66 use.

Physical interface	4.3-10
Electrical interface	■ Impedance: 50 ohm ■ VSWR: 1.5
Other	■ Lightning protection circuit on the RU (Refer to Resistability of Lightning) ■ IP65 is supported with the function of waterproofing with connected cable. No guarantee for waterproof when cable is loose contact or not connected. The RU is shipped with a protective dust cap on all the RF connectors to protect against dust and other small particles. The water ingress protection is not required for these caps.

2.7.2 Optical Port

The RU has one optical interface to connect to/from DU by eCPRI, which supports up-link and down-link base band data, clock and timing signals, and communication with the RU and Antenna Line Device (ALD).

- The SFP is not installed in the RU at shipment and needs to be prepared by operator side.
- The SFP is changeable in the field.
- The eCPRI format is based on ORAN specification, and O&M support can be provided by the DU vendor.

Physical interface	Fiber connector is type SM UPC LC in Opt cable. The FullAXS mini (product number: 2061981) or the compatible connector is adopted as the waterproof connector. The product number of external cable plug is 2061980.
Electrical interface	eCPRI: 10 Gb/s at least. Electrical interface is compliant to INF-8074.

Other	IP65 is supported for the function of waterproofing with fitted cap or connected cable. No guarantee for waterproof when cap or cable is loose contact or not connected.

2.7.3 DC Power and Ground Ports

The RU has a 2-wire (–48V, Return) power connector for the power Input. An example of the RU power connection and grounding is shown in the following figure.

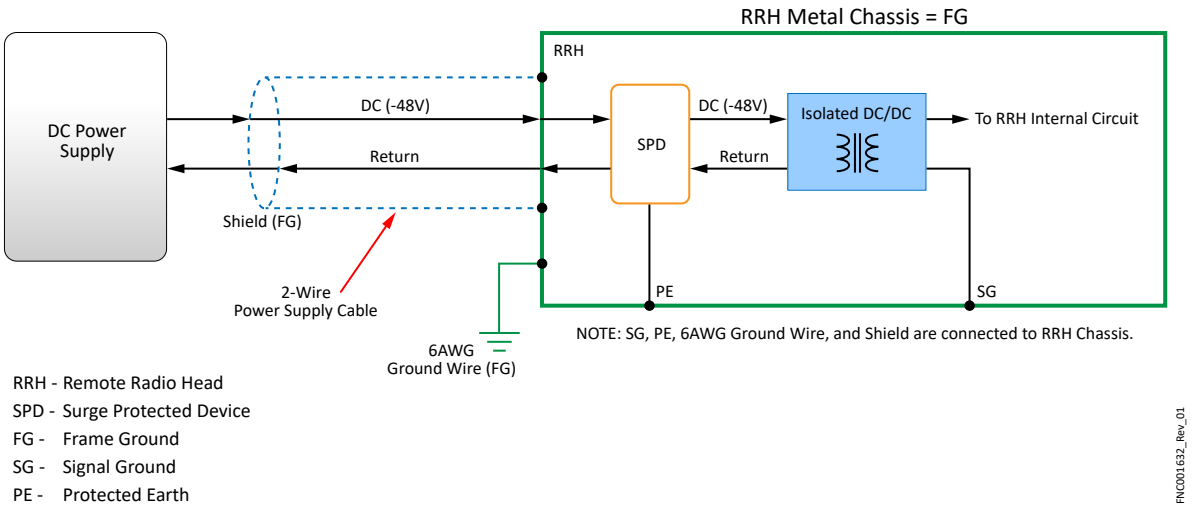

Figure 6
DC Power and Frame Ground Connection

Physical interface	10-752508-Z2P or the compatible connector of Amphe-BTS series is used. The product number of external cable plug is 10-761296-Z2S for AWG shielded cable or 10-761297-Z2S for 7-5 AWG shielded cable. Power cable length: 300 ft maximum. 6 AWG is required.
Electrical interface	–36.0 to –58.0 V DC input (Normal –48V)
Other	Lightning protection circuit on RU (Refer to Resistability of Lightning) IP65 is supported with the function of waterproofing with connected cable. No guarantee for waterproof when cable is loose contact or not connected. The RU to be shipped with a protective dust cap on the DC Power connector to protect against dust and other small particles. The water ingress protection is not required for these caps.

The RU has two M6 bolts and nuts for lug ground connection.

Physical interface	Two M6 C-C 5/8 in. ISO metric screw threads, coarse pitch ISO 261 and ISO 965. Hole diameter 1/4. ***Note:*** The bolt attachment torque must be tightened to at least 5.6 Nm.

Table 15
Power Cable Pinout

Pin	Output Type	Description
Pin A	–48 V DC	Red Wire
Pin B	Return	Black Wire

2.7.4 RET Port

This RU has one communication interface between antenna line devices. The four RU antenna ports connect to the antenna with 4.3-10 RF connectors. The RU RET port supports antenna beam adjustment using two combined RS-485 connectors and DC power circuits (required by 3GPP Technical Specification (TS) 25.461, Layer 1) and AISG 3.0.

Physical interface	■ IEC 60130-9 Ed. 3.0 with screw-ring locking 8 pins, female ■ 5 A on any pin
Electrical interface	■ RS-485 Based on 3GPP TS 25.461/AISG 3.0 Bit rates: 9.6/38.4/115.2 (kb/s) ■ DC Voltage supply DC Voltage 28.5 V (Accuracy ±1.5 V on RU connector) is supplied from pin number 6. Current capability 0…1.0 A (normal range)
Other	■ Lightning protection circuit on RU (refer to Resistability of Lightning) IP65 is supported for the function of waterproofing with fitted cap or connected cable. No guarantee for waterproof when cap or cable is loose contact or not connected.

Table 16
RET Interface Connector Pin Assignment

Pin	Description
1	Not connected
2	Not connected

Table 16 (Cont.)
RET Interface Connector Pin Assignment

Pin	Description
3	RS-485 inverting
4	Not connected
5	RS-485 non-inverting
6	10...30 V DC
7	DC return
8	Not connected

2.7.5 Debug/Test Port

The RU has a RJ-45 debug/test port for pre-deployment purposes, for example, development and manufacturing verification.

Attention: This port is for factory use only.

2.7.6 Maintenance Interface

A maintenance interface area is located on the bottom of the RU. This area is sealed by maintenance cover for protection against water ingress. The maintenance window cover can be opened manually using a Torx screwdriver. When not in use, the maintenance window cover must be fastened with screws torqued to 1.8 Nm.

The RU maintenance window has three LEDs that indicate the status of the RU for example, operation, failure (machine status) and eCPRI link.

- One Fault, Red color
- One Operational, Green color
- One Interfaces, Green color (one corresponding to eCPRI port)

The software controls the on/off and blinking LEDs according to the status of the RU.

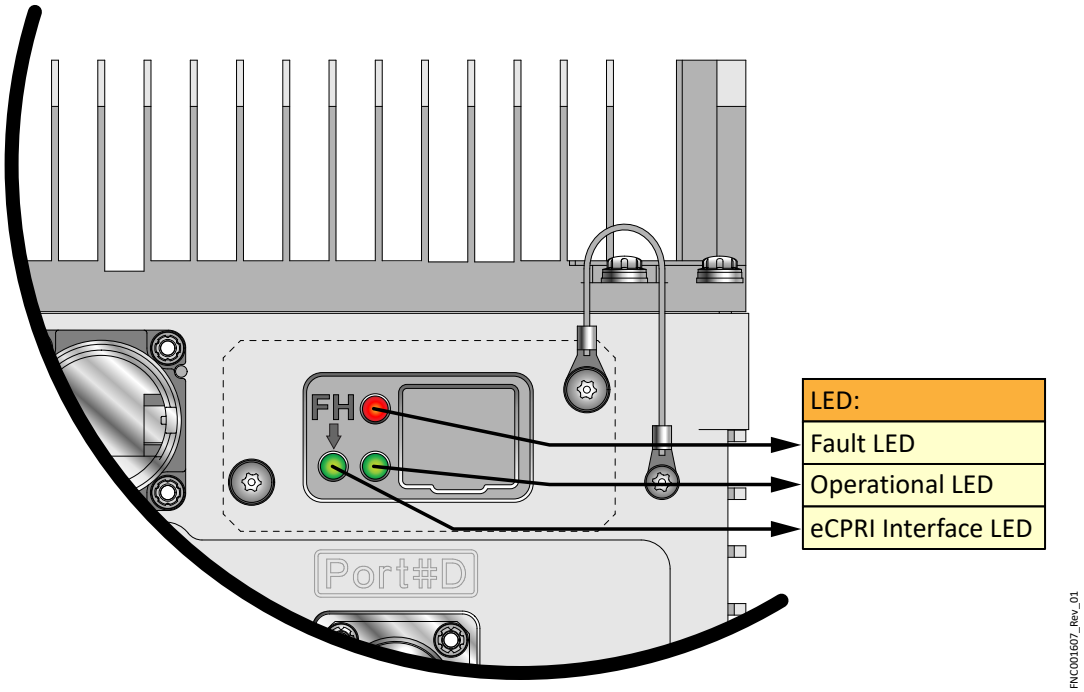

Figure 7
Maintenance Window

Table 17
RU Status by LED Combination

RU status	LED		
	Operation	Fault	Fronthaul
Operational	Green blinking	Red off	n/a
Transmitter On	Green on	Red off	n/a
Blocking	Green blinking	Red blinking	n/a
Major Alarm	Green off	Red blinking	n/a
Critical Alarm	Green off	Red on	n/a
Minor Alarm	Green blinking or Green on	Red blinking	n/a
L1 disconnection	n/a	n/a	Green off
L1 link found (M-Plane not found)	n/a	n/a	Green blinking
L1 & M-Plane link found	n/a	n/a	Green on

Table 18
Status of MMI LEDs

LED	OFF	Blink	Steady ON
Operational LED	No power	Communication with BBU is not found	Operation
Fault LED	No fault	Warning	Alarm
eCPRI interface LED	Not operating	n/a	Operation

2.8
TX Control Function

Tx Power Control

The output power of the RU is set and controlled remotely via M-plane on ORAN interface. The output power of the RU is controlled by 1 dB steps for each band and for each TX port (the controllable range is 10dB from the maximum TX power for a single carrier).

Cold Start

When the system temperature at startup is –40 to –20 ℃, the system reports to the EMS as a Cold Start state (refer to RU Alarms). RF transmission is not operating and power amp is set to on for warmup.

The temperature is monitored from the start of the device, and the Cold start state is released when the temperature reaches –20 ℃ and reported to the EMS.

TX Power Reduction

The RU supports the TX power reduction on switching to battery backup at the cell site. The TX power reduction is configured by DL Gain control (controllable range is 3 dB) for each band via M-plane message.

When the power source is restored from battery backup, the RU resume normal operation before switching to battery backup automatically by DL Gain controlling from host system.

In case the power source is restored after power loss, the RU resumes normal operation at the condition before power loss automatically as well as any other settings, for example, frequency and output power via M-plane control from host system.

Transmission Blanking

The RU supports transmission blanking by PA on/off control for each RF port via C-plane control from host system.

In case of warmup status, for example, cold start, PA on is set without transmission output regardless of C-plane control from host system.

Drain Voltage Control

Dual-band RU has a transmit power of 80 W/Port and has two transmit modes, depending on the transmit power of each band.

1. n70 + n66: 20 W + 60 W
2. n70 + n66: 40 W + 40 W

In order to reduce power consumption, the RU controls the drain voltage of the power amp in accordance with the transmission mode. The drain voltage is switched according to the transmission output power of each band. The transmission output power of each band is checked by the DL Gain value in the M-plane "TX-Array-Carrier" message.

When transmission carrier setting is added or changed during operation and switching of transmission mode occurs, transmission is turned off to change drain voltage, and transmission control is performed again after switching drain voltage.

The following flow image is sample for 3 carriers, maximum 60 W at n66.

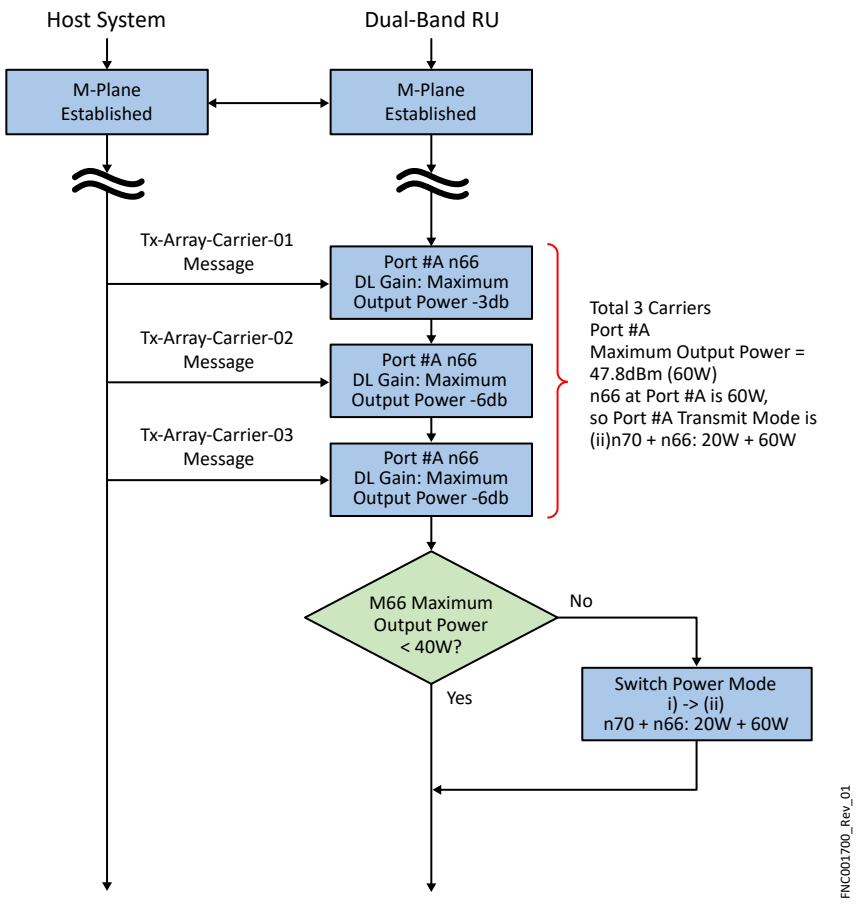

2.9 Performance Requirement

In this section:

2.9.1 eCPRI
2.9.2 Radio Performance
2.9.3 Power Supply

2.9.1 eCPRI

Line Bit Rate

The RU has one optical interface for eCPRI. Supporting eCPRI a line bit rate of at least 10 Gb/s (10.3125 Gb/s) is necessary.

The RU is compliant with ORAN 7-2A Spec.

Each plane, for example, control, user, synchronization, management, are compliant with the following documents:

Control, User, and Synchronization Plane	ORAN-WG4.CUS.0-v02.00
Management Plane	ORAN-WG4.MP.0-v02.00

Selecting Recovery Clock

The RU supports the following standards:

- Telecom Slave Clock (T-TSC) to G8275.1
- IEEE 1588 (PTP)
- ITU-T G.8262 (SyncE)
- IEEE 1914.1

The RU supports Telecom Slave Clock (T-TSC) to G8275.1 and does not support G8275.2. The RU provides additional noise filtering to filter fronthaul interface dynamic noise which will help meet 3GPP frequency accuracy requirement.

The RU maintains sync holdover with SyncE, in case of PTP GPS or IEEE 1588 loss for 24 hrs. The synchronization accuracy of SyncE is maintained for 24 hrs under the following condition.

- SyncE clock at Grandmaster Clock (GMC) synchronizes with 1 pps of PTP.
- SyncE clock of RU is synchronized with the GMC before loss of PTP.

The RU supports IEEE 1914.1, ITU-T G.826x, G.827x series specified in ORAN-WG4.CUS.0-v02.00.

Counter

The RU supports the counters of *object-unit RU* on Key Performance Indicator (KPI) counter specified in ORAN-WG4.CUS.0-v02.00.

Optical Module

The following table lists the recommended SFP parts that can be installed in the RU.

Table 19
Recommended SFP Parts

SFP Type (Transmission distance)	Vendor	Part Number
10 km	Molex	TPP4XGFLRIFUJE2x
	II-VI Incorporated	FTLX1472M3BTL-FW
	Accelink Technologies Co., Ltd	RTXM228-409-C74
40 km	Sumitomo Electric Industries, Ltd.	SPP5200SV-FG-W
	Accelink Technologies Co., Ltd.	RTXM228-424-C74
	APAC Opto Electronics Inc.	LE48-H3L-TI-N-LF

2.9.2 Radio Performance

The RU meets the radio specifications described in this section under all environmental conditions specified, unless otherwise noted.

General Specifications

Table 20
General Specification

Item	Specification				
Channel Bandwidth	System	5G-NR			
	Channel Bandwidth (MHz)	5	10	15[1]	20
	Transmission bandwidth configuration N_{RB}	25	52	79	106
	Bandwidth occupied by sub carriers (MHz)	4.500	9.360	14.220	19.080
	Sampling frequency (Fs) (MHz)	7.68	15.36	23.04	30.72
	Number of Sub-Carriers (incl. 1 DC)	300	624	948	1272
Operating Band	3GPP n70/n66				
Instantaneous Bandwidth (IBW)	n70: 25 MHz n66: 90 MHz				
TX and RX Frequency Interval	n70: 25 MHz n66: 330 MHz				
Sub carrier spacing	5G-NR	15 kHz, 30 kHz			
Carrier Configurations	Refer to Carrier Configuration				

1 15 MHz is not currently supported

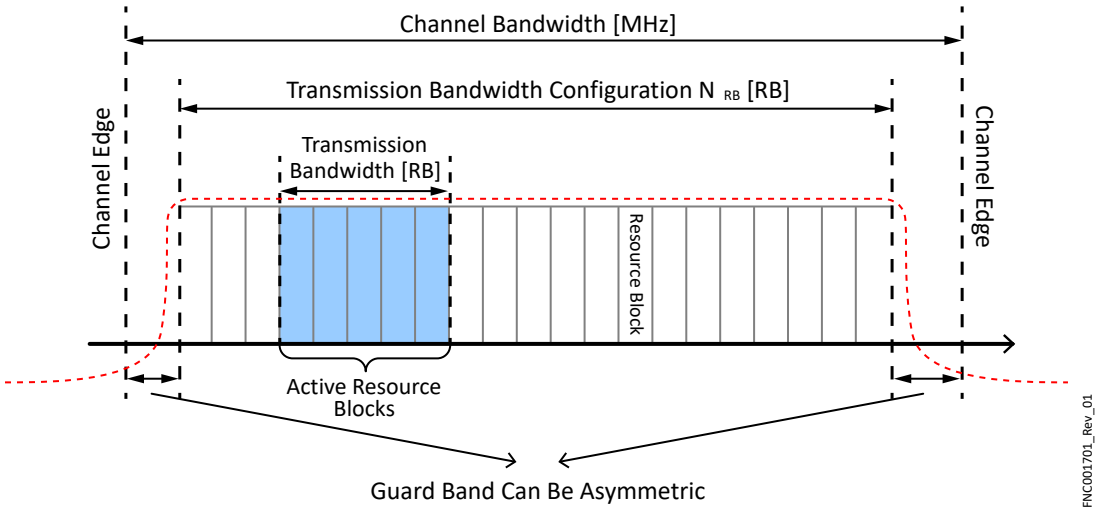

Figure 8
Definition of Channel Bandwidth and Transmission Bandwidth Configuration for One NR Channel

Transmitter Specification

The RF performance requirements in this section are applicable only after the RU DPD system has converged.

Operating Band

NR n70	617 MHz…652 MHz
NR n66	717 MHz…728 MHz

Frequency Error

Specification	< ±0.05 ppm
Test Tolerance	±12 Hz

VSWR

< 1.5 @antenna port

Maximum Output Power

Channel BW	Maximum Output Power	Digital Input IQ Power Level (Vrms)
n70		
25 MHz	40 W (44.8 dBm) Or 40 W (41.8 dBm)	Compliant with ORAN
20 MHz		
10 MHz		
5 MHz		
n66		
20 MHz	40 W (46.0 dBm) Or 20 W (43.0 dBm)	Compliant with ORAN
10 MHz		
5 MHz		

Power Accuracy

–40 to +45 ℃	< ±1.0 dB
+45 to +55 ℃	< ±1.0 dB
Test tolerance	±0.7 dB

Occupied Bandwidth

5G-NR

5 MHz	< 5 MHz (99% Bandwidth)
10 MHz	< 10 MHz (99% Bandwidth)
20 MHz	< 20 MHz (99% Bandwidth)
25 MHz	< 25 MHz (99% Bandwidth)

Adjacent Channel Leakage Power Ratio (ACLR)

Table 21
ACLR

Channel Bandwidth	Base Station Adjacent Channel Center Frequency Offset Below The Lowest Or Above The Highest Carrier Center Frequency Transmitted[1]	Filter On The Adjacent Channel Frequency And Corresponding Filter Bandwidth[2]	ACLR Limit	Test Tolerance
5, 10, 15[3], 20 MHz	$BW_{Channel}$×2	Square (BW_{config})	45 dB	0.8 dB
	$BW_{channel}$×2	Square (BW_{config})		
	$BW_{Channel}/2 + 2.5$	Square (4.5 MHz)	45 dB[4]	
	$BW_{Channel}/2 + 7.5$	Square (4.5 MHz)		

1 $BW_{channel}$ and BW_{config} are the Base Station channel bandwidth and transmission bandwidth configuration of the lowest/highest carrier transmitted on the assigned channel frequency.
2 With SCS that provides largest transmission bandwidth configuration (BW_{config}).
3 15 MHz is not currently supported.
4 The requirements are applicable when the band is also defined for Universal Terrestrial Radio Access (UTRA) Evolved UTRA (E-UTRA).

Table 22
ACLR (In Non-Contiguous Spectrum)

Channel Bandwidth	Sub-block or Inter RF Bandwidth gap Size (Wgap) Where the limit Applies (MHz)	Base Station Adjacent Channel Center Frequency Offset Below Or Above The Sub-block Or Base Station RF Bandwidth Edge (inside The Gap)	Assumed Adjacent Channel Carrier	Filter On The Adjacent Channel Frequency and Corresponding Filter Bandwidth	ACLR Limit	Test Tolerance
5, 10, 15[1], 20 MHz	Wgap ≥ 15[2]	2.5 MHz	5 MHz NR[3]	Square (BW_{config}[4])	45 dB	0.8 dB
	Wgap ≥ 20[2]	7.5 MHz	5 MHz NR[3]	Square (BW_{config}[4])	45 dB	

1 15 MHz is not currently supported.
2 Applicable in case the base station channel bandwidth of the NR carrier transmitted at the other edge of the gap is 5, 10, 15, 20 MHz.
3 With SCS that provides largest transmission bandwidth configuration (BW_{config}).
4 BW_{config} is the transmission bandwidth configuration of the assumed adjacent channel carrier.

Table 23
CACLR

Channel Bandwidth	Sub-block Or Inter RF Bandwidth Gap Size (Wgap) Where The Limit Applies (MHz)	Base Station Adjacent Channel Center Frequency Offset Below Or Above The Sub-block Or Base Station RF Bandwidth Edge (inside The Gap)	Assumed Adjacent Channel Carrier	Filter On the Adjacent Channel Frequency and Corresponding Filter Bandwidth	CACLR Limit	Test Tolerance
5, 10, 15[1], 20 MHz	5 < Wgap < 15[2]	2.5 MHz	5 MHz NR[3]	Square (BW_{config}[4])	45 dB	0.8 dB
	10 < Wgap < 20[2]	7.5 MHz	5 MHz NR[3]	Square (BW_{config}[4])	45 dB	

1 15 MHz is not currently supported.
2 Applicable in case the base station channel bandwidth of the NR carrier transmitted at the other edge of the gap is 5, 10, 15, 20 MHz.
3 With Subcarrier Spacing (SCS) that provides largest transmission BW_{config}
4 BW_{config} is the transmission bandwidth configuration of the assumed adjacent channel carrier.

Table 24
Operating Band Unwanted Emission

Measurement Frequency[1, 2]	Minimum Requirement[3]	Measurement Bandwidth	Test Tolerance
0.05 MHz ≤ f_offset < 5.05 MHz	$-7\ dbm - \frac{7}{5} \cdot \left(\frac{f_offset}{MHz} - 0.05 \right) dB$	100 kHz	1.5 dB
5.05 MHz ≤ f_offset < min (10.05 MHz, f_offset max)	-14 dBm	100 kHz	
10.05 MHz ≤ f_offset < f_offset max	-16 dBm[4]	100 kHz	0 dB
Maximum offset of Operating Band Unwanted Emission (OBUE) outside the downlink operating band	Δf_{OBUE} MHz: 10 MHz		

1 For a base station supporting non-contiguous spectrum operation within any operating band, the emission limits within sub-block gaps is calculated as a cumulative sum of contributions from adjacent sub-blocks on each side of the sub-block gap, where the contribution from the far-end sub-block is scaled according to the measurement bandwidth of the near-end sub-block. Exception is Δf ≥ 10 MHz from both adjacent sub-blocks on each side of the sub-block gap, where the emission limits within sub-block gaps is –16 dBm/100 kHz.
2 f_offset is the separation between the channel edge frequency and the center of the measuring filter.
3 For a multi-band connector with Inter RF Bandwidth gap < $2*\Delta f_{OBUE}$ the emission limits within the Inter RF Bandwidth gaps is calculated as a cumulative sum of contributions from adjacent sub-blocks or RF Bandwidth on each side of the Inter RF Bandwidth gap, where the contribution from the far-end sub-block or RF Bandwidth is scaled according to the measurement bandwidth of the near-end sub-block or RF Bandwidth.
4 The requirement is not applicable when Δf_{max}< 10 MHz.

Table 25
Spurious Emissions

Frequency Range	Maximum Level*	Measurement Bandwidth
9 kHz…150 kHz	< –36 dBm	1 kHz

Table 25 (Cont.)
Spurious Emissions

Frequency Range	Maximum Level*	Measurement Bandwidth
150 kHz…30 MHz	< –36 dBm	10 kHz
30 MHz…452.5 MHz	< –36 dBm	100 kHz
452.5 MHz…457.5 MHz	< –96 dBm	100 kHz
457.5 MHz…462.5 MHz	< –36 dBm	100 kHz
462.5 MHz…467.5 MHz	< –52 dBm	1 MHz
467.5 MHz…470 MHz	< –36 dBm	100 kHz
470 MHz…607 MHz	< –60 dBm	100 kHz
662 MHz…663 MHz	< –60 dBm	100 kHz
663 MHz… 707 MHz	< –96 dBm	100 kHz
738 MHz…756 MHz	< –52 dBm	1 MHz
756 MHz…758 MHz	< –36 dBm	100 kHz
758 MHz…768 MHz	< –52 dBm	1 MHz
768 MHz…777 MHz	< –36 dBm	100 kHz
777 MHz…787 MHz	< –96 dBm	100 kHz
787 MHz…788 MHz	< –36 dBm	100 kHz
788 MHz…798 MHz	< –96 dBm	100 kHz
798 MHz…807 MHz	< –36 dBm	100 kHz
80 7MHz…824 MHz	< –96 dBm	100kHz
824 MHz…849 MHz	< –98 dBm	100kHz
904 MHz…915 MHz	< –98 dBm	100 kHz
915 MHz…921 MHz	< –36 dBm	100 kHz
921 MHz…925 MHz	< –57 dBm	100 kHz
925 MHz…960 MHz	< –52 dBm	1 MHz
960 MHz…1000 MHz	< –36 dBm	100 kHz
1000 MHz…1427 MHz	< –30 dBm	1 MHz
1427 MHz…1517 MHz	< –96 dBm	100 kHz
1517 MHz…1518 MHz	< –52 dBm	1 MHz
1518 MHz…1525 MHz	< –30 dBm	1 MHz

Table 25 (Cont.)
Spurious Emissions

Frequency Range	Maximum Level*	Measurement Bandwidth
1525 MHz…1559 MHz	< –52 dBm	1 MHz
1559 MHz…1626.5 MHz	< –30 dBm	1 MHz
1626.5 MHz…1660.5 MHz	< –96 dBm	100 kHz
1660.5 MHz…1695 MHz	< –30 dBm	1 MHz
1695 MHz…1710 MHz	< –96 dBm	100 kHz
1710 MHz…1785 MHz	< –98 dBm	100 kHz
1785 MHz…1805 MHz	< –30 dBm	1 MHz
1805 MHz…1850 MHz	< –52 dBm	1 MHz
1850 MHz…1910 MHz	< –98 dBm	100 kHz
1910 MHz…2025 MHz	< –96 dBm	100 kHz
2025 MHz…2110 MHz	< –30 dBm	1 MHz
2110 MHz…2200 MHz	< –52 dBm	1 MHz
2200 MHz…2305 MHz	< –30 dBm	1 MHz
2305 MHz…2315 MHz	< –96 dBm	100 kHz
2315 MHz…2350 MHz	< –30 dBm	1 MHz
2350 MHz…2360 MHz	< –52 dBm	1 MHz
2360 MHz…2400 MHz	< –30 dBm	1 MHz
2400 MHz…2483.5 MHz	< –70 dBm	100 kHz
2483.5 MHz…2495 MHz	< –52 dBm	1 MHz
2495 MHz…2496 MHz	< –30 dBm	1 MHz
2496 MHz…2690 MHz	< –96 dBm	100 kHz
2690 MHz…2700 MHz	< –30 dBm	1 MHz
2700 MHz…2900 MHz	< –90 dBm	1 MHz
2900 MHz…3300 MHz	< –30 dBm	1 MHz
3300 MHz…4200 MHz	< –96 dBm	100 kHz
4200 MHz…4400 MHz	< –30 dBm	1 MHz
4400 MHz…5000 MHz	< –96 dBm	100 kHz
5000 MHz…5091 MHz	< –70 dBm	100 kHz

Table 25 (Cont.)
Spurious Emissions

Frequency Range	Maximum Level*	Measurement Bandwidth
5091 MHz...5150 MHz	< –30 dBm	1 MHz
5150 MHz...5350 MHz	< –70 dBm	100 kHz
5350 MHz...5470 MHz	< –52 dBm	1 MHz
5470 MHz...5850 MHz	< –70 dBm	100 kHz
5850 MHz...5925 MHz	< –52 dBm	1 MHz
5925 MHz...127500 MHz	< –30 dBm	1 MHz

Transmitter Intermodulation

The transmitter intermodulation level does not exceed the unwanted emission limits in clauses ACLR, OBUE and Spurious Emissions in the presence of an NR interfering signal according to the following criteria:

Wanted Signal type	NR single carrier, or multi-carrier, or multiple intra-band contiguously or non-contiguously aggregated carriers, with NB-IoT operation in NR in-band if supported.
Interfering Signal type	NR signal, the minimum base station channel bandwidth with 15 kHz SCS: 5 MHz for n70, n66
Interfering Signal level	Rated total output power (Prated, t, AC) in the operating band –30 dB
Interfering signal center frequency offset from the lower/upper edge of the wanted signal or edge of sub-block inside a sub-block gap	for n=1, 2, and 3

Modulation Quality

Table 26
Error Vector Magnitude (EVM)

Modulation Scheme	Required EVM	Test Tolerance
QPSK	≤ 17.5%	1.0%
16QAM	≤ 12.5%	
64QAM	≤ 8%	
256QAM	≤ 3.5%	

Dynamic Range

Table 27
Total Power Dynamic Range (15 kHz SCS)

Base Station Channel Bandwidth (MHz)	Total Power Dynamic Range	Test Tolerance
5	≥ 13.9 dB	0.4dB
10	≥ 17.1 dB	
15[1]	≥ 18.9 dB	
20	≥ 20.2 dB	

1 15 MHz is not currently supported.

Table 28
RE (Resource Element) Power Control Dynamic Range

Modulation Scheme Used On The RE	RE Power Control Dynamic Range	
	Down	Up
QPSK Physical Downlink Control Channel (PDCCH)	–6 dB	+4 dB
QPSK (PDSCH)	–6 dB	+3 dB
16QAM PDSCH	–3 dB	+3 dB
64QAM PDSCH	0 dB	0 dB
256QAM PDSCH	0 dB	0 dB

Note: Total TX power is always less or equal to maximum base station output power.

FCC Out-of-Band Emission Specification

FCC rule	
CFR 47 § 27.53, CFR 47 § 27.1134 for n70, n66 –19 dBm/RBW per port [= –13 dBm/single-transmit –6 dB (10 x log (4, No. of TX)].	
Resolution Bandwidth for Frequency (RBW)	
>1 MHz bands immediately outside and adjacent to the frequency block have the following specifications:	
n70	200 kHz (Max)
n66	200 kHz (Max)
Outside 1 MHz, the reference bandwidth (1 MHz) is applied.	

Note: FCC Out-of-Block emission specification apply to the Δf_{OBUE} (=10 MHz) range

Time Alignment Error

- For Multiple-Input and Multiple-Output (MIMO) transmission, at each carrier frequency, TAE must not exceed 65 ns.
- For intra-band contiguous carrier aggregation, with or without MIMO, Time Alignment Error (TAE) must not exceed 260 ns.
- For intra-band non-contiguous carrier aggregation, with or without MIMO, TAE must not exceed 3 µs.
- For inter-band carrier aggregation, with or without MIMO, TAE must not exceed 3 µs.

Receiver Specification

Operating Band

n70	1695...1710 MHz
n66	1710...1780 MHz

VSWR

< 1.5 @antenna port

Reference Sensitivity (NF)

NF_{REF}+ 2.5 dB

Dynamic Range (EVM)

Dynamic range (SCS=15 kHz)

EVM≤28.9%					
Base Station Channel Bandwidth (MHz)	**Subcarrier Spacing (kHz)**	**Reference Measurement Channel**	**Wanted Signal Mean Power (dBm)**	**Interfering Signal Mean Power (dBm)/BW_{config}**	**Type of Interfering Signal**
5	15	G-FR1-A2-1	–70.7	–82.5	Additive White Gaussian Noise (AWGN)
10	15	G-FR1-A2-1	–70.7	–79.3	AWGN
15 [1]	15	G-FR1-A2-1	–70.7	–77.5	AWGN

EVM≤28.9%					
Base Station Channel Bandwidth (MHz)	Subcarrier Spacing (kHz)	Reference Measurement Channel	Wanted Signal Mean Power (dBm)	Interfering Signal Mean Power (dBm)/BW_{config}	Type of Interfering Signal
20	15	G-FR1-A2-4	–64.5	–76.2	AWGN

1 15 MHz is not currently supported.

Adjacent Channel Selectivity

Base Station Channel Bandwidth of the Lowest/ Highest Carrier Received (MHz)	Interfering Signal Mean Power (dBm)	Interfering Signal Center Frequency Offset from the Lower/Upper Base Station RF Bandwidth Edge or Sub-block Edge Inside a Sub-Block gGap (MHz)	Type of Interfering Signal	Additional Notes
5	–52	±2.5025	5 MHz Discrete Fourier Transform Spread Orthogonal Frequency Division Multiplexing (DFT-s-OFDM) NR signal 15 kHz SCS, 25 Resource Blocks (RBs)	(NF) NF_{REF} + 6 dB
10	–52	±2.5075		
15[1]	–52	±2.5125		
20	–52	±2.5025		

1 15 MHz is not currently supported

In-band Blocking

Table 29
General Blocking

Base Station Channel Bandwidth of the Lowest/ Highest Carrier Received (MHz)	NF	Interfering Signal Mean Power (dBm)	Interfering Signal Center Frequency Minimum Offset from the Lower/Upper Base Station RF Bandwidth Edge or Sub-block Edge Inside a Sub-block Gap (MHz)	Type of Interfering Signal
5, 10, 15, 20[1]	NF_{REF} + 6 dB	–43	±7.5	5 MHz DFT-s-OFDM NR signal 15 kHz SCS, 25 RBs

1 15 MHz is not currently supported.

Out-of-band Blocking

Table 30
General Blocking

Frequency Range (MHz)	Interfering Signal Mean Power (dBm)	Type of Interfering Signal	Additional Notes
1 ... (FUL_low-20) (FUL_low+20) ... 12750	–15	CW carrier	(NF) NF_{REF} + 6 dB

Table 31
Blocking Performance Requirement for NR Base Station when Co-located with Base Station in Other Frequency Bands

Co-located Base Station type	Centre Frequency of Interfering Signal (MHz)	Interfering Signal Mean Power (dBm)	Type of Interfering Signal
Macro GSM850 or CDMA850	869-894	16	CW carrier
Macro PCS1900	1930-1990	16	CW carrier
WA NR Band 2	1930-1990	16	CW carrier
WA NR Band 4	2110-2155	16	CW carrier
WA NR Band 5	869-894	16	CW carrier
WA NR Band 12	729-746	16	CW carrier
WA NR Band 13	746-756	16	CW carrier
WA NR Band 14	758-768	16	CW carrier
WA NR Band 17	734-746	16	CW carrier
WA NR Band 25	1930-1995	16	CW carrier
WA NR Band 26	859-862 869-894	16	CW carrier
WA NR Band 30	2350...2360	16	CW carrier
WA NR Band 41	2496...2690	16	CW carrier
WA NR Band 66	2110...2200	16	CW carrier
WA NR Band 70	1995...2020	16	CW carrier
Digital TV (DTV) band	470...698	16	CW carrier

Receiver Intermodulation

Table 32
General

Mean Power of Interfering Signals (dBm)	NF	
−52	NF_{REF} + 6 dB	
Base Station Channel Bandwidth Of The Lowest/highest Carrier Received (MHz)[1]	**Interfering Signal Centre Frequency Offset From The Lower/upper Base Station RF Bandwidth Edge (MHz)[2]**	**Type of Interfering Signal[3]**
5	±7.5	CW
	±17.5	5 MHz DFT-s-OFDM NR signal
10	±7.465	CW
	±17.5	5 MHz DFT-s-OFDM NR signal
15[4]	±7.43	CW
	±17.5	5 MHz DFT-s-OFDM NR signal
20	±7.395	CW
	±17.5	5 MHz DFT-s-OFDM NR signal

1 Number of RBs is 25 for 15 kHz subcarrier spacing and 10 for 30 kHz subcarrier spacing.
2 Number of RBs is 100 for 15 kHz subcarrier spacing, 50 for 30 kHz subcarrier spacing and 24 for 60 kHz subcarrier spacing.
3 The RBs must be placed adjacent to the transmission bandwidth configuration edge which is closer to the Base Station RF Bandwidth edge.
4 15 MHz is not currently supported

Table 33
Narrowband Intermodulation

Mean power of interfering signals (dBm)	NF	
−52	NF_{REF} + 6 dB	
Base Station Channel Bandwidth Of The Lowest/highest Carrier Received (MHz)[1, 2]	**Interfering RB Center Frequency Offset From The Lower/upper Base Station RF Bandwidth Edge Or Sub-block Edge Inside A Sub-block Gap (kHz)[3]**	**Type of Interfering Signal**
5	±360	CW
	±1420	5 MHz DFT-s-OFDM NR signal, 1 RB
10	±370	CW
	±1960	5 MHz DFT-s-OFDM NR signal, 1 RB

Base Station Channel Bandwidth Of The Lowest/highest Carrier Received (MHz)[1, 2]	Interfering RB Center Frequency Offset From The Lower/upper Base Station RF Bandwidth Edge Or Sub-block Edge Inside A Sub-block Gap (kHz)[3]	Type of Interfering Signal
15[4],	±380	CW
	±1960	5 MHz DFT-s-OFDM NR signal, 1 RB
20	±390	CW
	±2320	5 MHz DFT-s-OFDM NR signal, 1 RB

1 Interfering signal consisting of one resource block positioned at the stated offset, the base station channel bandwidth of the interfering signal is located adjacently to the lower/upper Base Station RF Bandwidth edge or sub-block edge inside a sub-block gap.
2 This requirement applies only for a G-FRC mapped to the frequency range at the channel edge adjacent to the interfering signals.
3 The center of the interfering RB refers to the frequency location between the two central subcarriers.
4 15 MHz is not currently supported

In-Channel Selectivity

Table 34
General (SCS=15 kHz)

Base Station Channel Bandwidth (MHz)	Reference Measurement Channel	Wanted Signal Mean Power (dBm)	Interfering Signal Mean Power (dBm)	NF (dB)	Type of Interfering Signal
5	G-FR1-A1-7	–100.6	–81.4	NF_{REF} + 3.3	DFT-s-OFDM NR signal, 15 kHz SCS, 10 RBs
10	G-FR1-A1-1	–98.7	–77.4	NF_{REF} + 3	DFT-s-OFDM NR signal, 15 kHz SCS, 25 RBs
15[1]	G-FR1-A1-1	–98.7	–77.4	NF_{REF} + 3	DFT-s-OFDM NR signal, 15 kHz SCS, 25 RBs
20	G-FR1-A1-1	–98.7	–77.4	NF_{REF} + 3	DFT-s-OFDM NR signal, 15 kHz SCS, 25 RBs

1 15 MHz is not currently supported

Note: Wanted and interfering signals are placed adjacently around frequency of the carrier center frequency (Fc), where the Fc is defined for base station channel bandwidth of the wanted signal. The aggregated wanted and interfering signal must be centered in the base station channel bandwidth of the wanted signal.

2.9.3
Power Supply

Electrical Specifications

Nominal Voltage	Nominal voltage: –48.0 V (ATIS-0600315)
Operating Voltage Range	–36.0 to –58.0 V In this voltage, RU satisfies the performance described in this hardware specification.
Abnormal Voltage Range	0.0 to –36.0 V Less than –58.0 V
Over Voltage Transient	–75 V (9.5 ±0.5 ms) (ATIS-0600315) Criteria: non destruction

DC Power Specification

DC Current	36.5 Amps maximum
DC Power Consumption	1300 W maximum (include AISG)

3
Ordering Information

In this chapter:

3.1 Radio Unit
3.2 Mounting Kits
3.3 Accessories

3.1
Radio Unit

Unit Name	Part Number
Dual-Band Radio (n66, n70)	TA08025-B604

3.2
Mounting Kits

Unit Name	Part Number	Description
Radio Bracket Kit	PCD4B780-0007-C001	▪ 2 x L-shape bracket ▪ 16 x bracket fitting bolt ▪ 16 x bracket fitting spring washer ▪ 16 x bracket fitting flat washer ▪ 4 x ANT mount/wall/pole fitting bolt ▪ 4 x insulation bush ▪ 4 x insulation washer
Wall Mounting Kit	PCD4B780-0005-C001	▪ Large wall mounting bracket ▪ Small wall mounting bracket ▪ 4 x Insulation Bushings A M10, Flat ▪ 4 x Insulation Bushings B M10, Stepped ▪ 4 x SS Bolt M10 x 30 ▪ 2 x SS Bolt M10 x 40 ▪ 6 x SS M10 Spring Washer ▪ 6 x SS M10 Washer ▪ Wall mount screw kit ▪ Fasteners
Pole Mounting Kit	PCD4B780-0006-C001	▪ 1 x Pole mounting plate ▪ 4 x SS bolt 3/16 3.5L ▪ 4 x SS bolt 3/16 10.0L ▪ 1 x Mount Plate Adapter ▪ 4 x M10 x 30L bolt ▪ 2 x M10 x 40L bolt ▪ 2 x Large Crossmembers ▪ 2 x Small Crossmembers ▪ 4 x Insulator Bushings M10, Stepped ▪ 4 x Insulator Bushings M10, Flat ▪ 16 x 3/8 Nuts ▪ 6 x M10 SS Washers, Split ▪ 8 x M10 Lock Washers, 0.375 ▪ 6 x M10 SS Washers, Flat, 0.375 ▪ 6 x M10 SS Washers, Flat ▪ Fasteners
Eye Bolt Kit	10-578-000 F6-WB8-200 F6-WM8-200	▪ 2 x M8 eye bolts ▪ 2 x M8 spring washer SS ▪ 2 x M8 washer SS

3.3 Accessories

Attention: The RU requires the following customer-provided accessories to operate.

Unit Name	Description
DC Power Cable	Connects to RU DC power connector
RF Cable	Connect RU antenna port to antenna
AISG Cable	Cable connects to the RU RET port
Optional Cable	Optical cable connects from RU eCPRI optical port to the DU
Optics, SFP	10G SFP
Antenna Bracket	Allows the antenna to mount to RU
Antenna	Transmits and receives radio signals

4
Installation

In this chapter:

4.1 Unpack
4.2 Mounting
4.3 Installation Precautions
4.4 Returning of Defective Equipment
4.5 RU Installation
4.6 Cable Installation

The following sections describe how to attach the RU to a wall or pole using a mounting kit.

Caution: Use care when handling the RU, as it is heavy. Fujitsu recommends installing the RU on a two-person team to avoid damage to the unit or injury to the user.

Caution: If the RU is to be installed at high location on a pole, Fujitsu recommends using lifting equipment to hoist the RU by a pair of eye bolts mounted on the RU.

Attention: Manipulez le RU avec précaution car il est lourd. Fujitsu recommande d'installer le RU sur deuxéquipe de personnes pour éviter d'endommager l'unité ou de blesser l'utilisateur.

Attention: Si le RU doit être installé en hauteur, Fujitsu recommande d'utiliser un équipement de levage pour l'EF par une paire de boulons à œil montés sur l'EF.

4.1
Unpack

When unpacking the RU, do not remove the foam blocks attached to the antenna connectors, as the foam protects the antenna connectors during installation.

Warning: While unpacking the RU, do not remove the foam blocks attached to the antenna connectors, as the foam protects the antenna connectors during installation.

Avertissement: Lors du déballage du RU, ne retirez pas les blocs de mousse attachés aux connecteurs d'antenne, car la mousse protège les connecteurs d'antenne lors de l'installation.

Note: If the RU is not being installed immediately after unpacking, keep the caps on the connectors of the RU and store it in an area protected from rain and water in accordance with Transport and Storage Requirements.

To unpack the shipping package:

Step 1
Open the shipping package and carefully remove the contents.

Step 2
Place the RU on packing foam or an anti-static mat.

Step 3
Remove all packing foam that is around the heat sink and unit.

✓ **This task is complete.**

4.2
Mounting

RU can be installed on a wall or pole away from the antenna. Heat generated by the RU can be radiated to the antenna through the mounting bracket. Mounting details, for example, configuration and position of the mounting bracket, are determined after consultation with the antenna vendor.

Mounting an RU has the following requirements.

- Mounting the RU requires a pole to be within 2 to 4.5 inches in diameter.
- The wall mounting surface and anchors must be able to withstand up to 240 lbs (108.862 kg) of weight.

The following graphic shows an RU attached to a pole with a pole mounting kit.

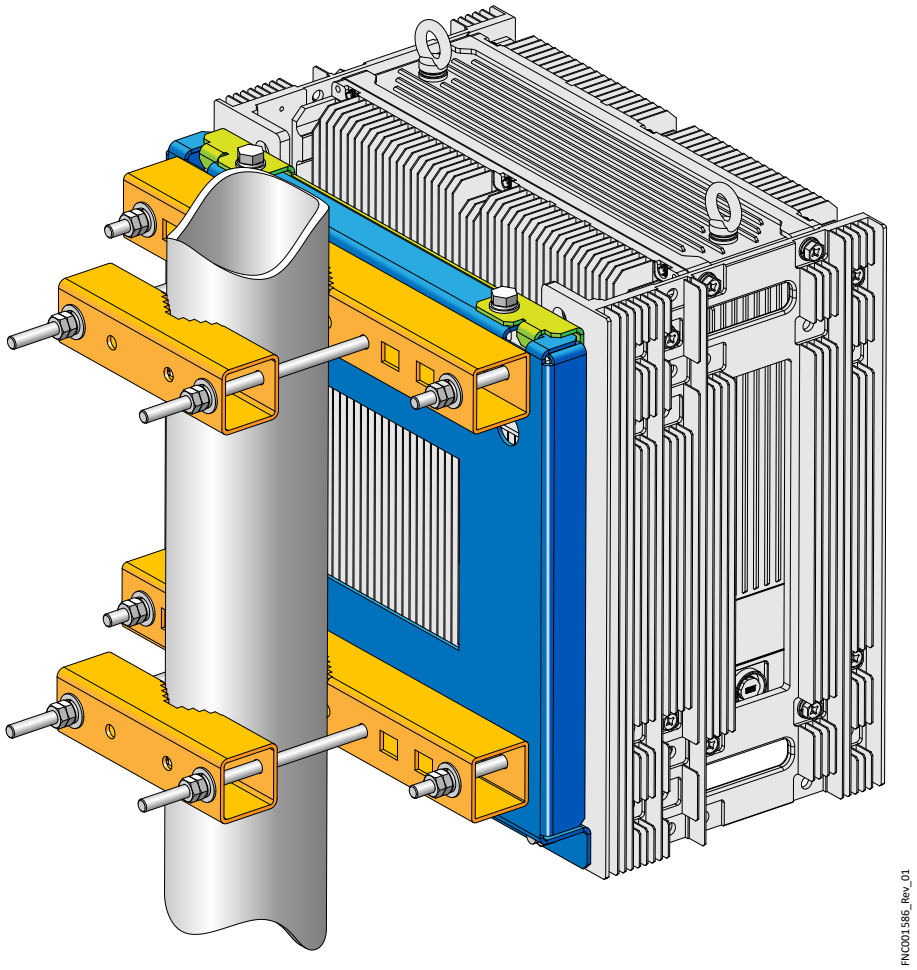

Figure 9
Pole Mount Final Result

The following graphic shows an RU mounted on a wall with a wall mounting kit.

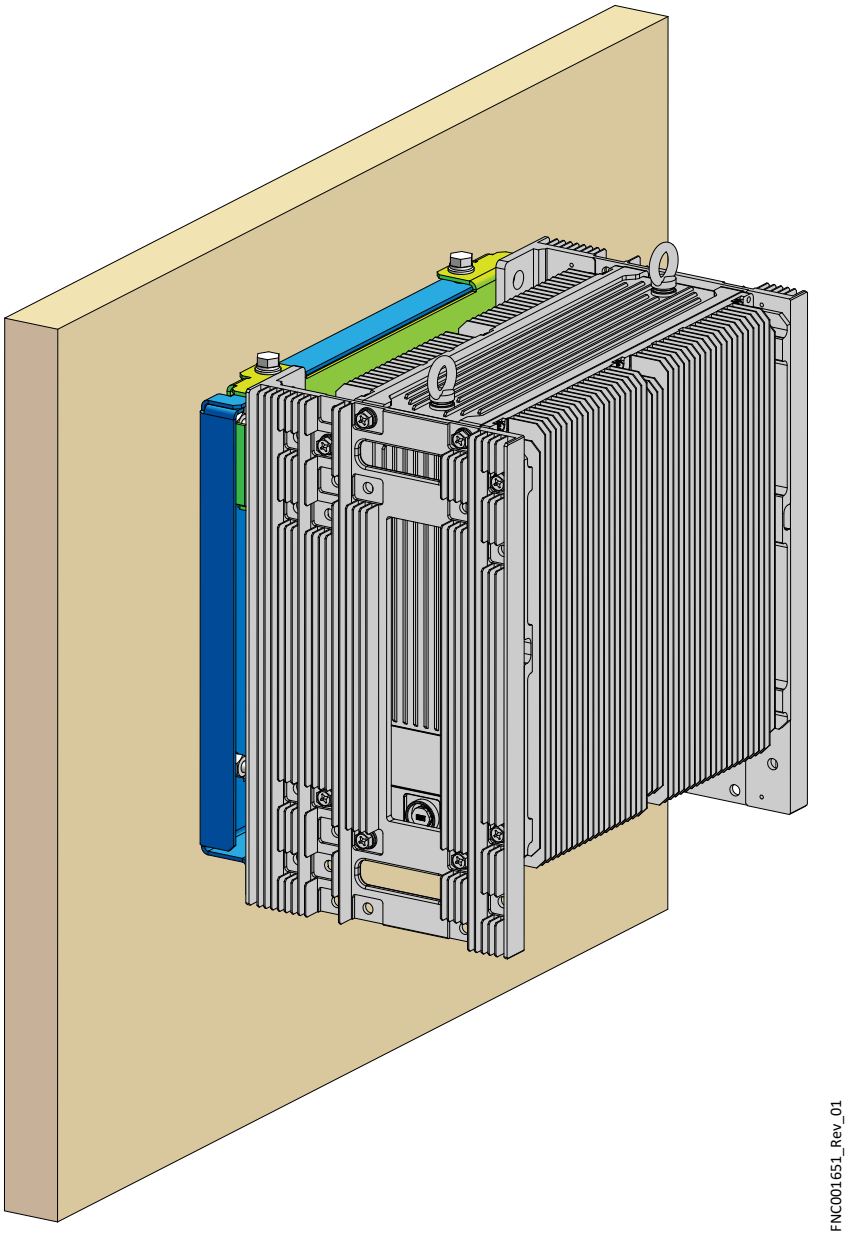

Figure 10
Wall Mount Final Result

The following graphic shows how to mount an RU to a pole using a pole mounting kit.

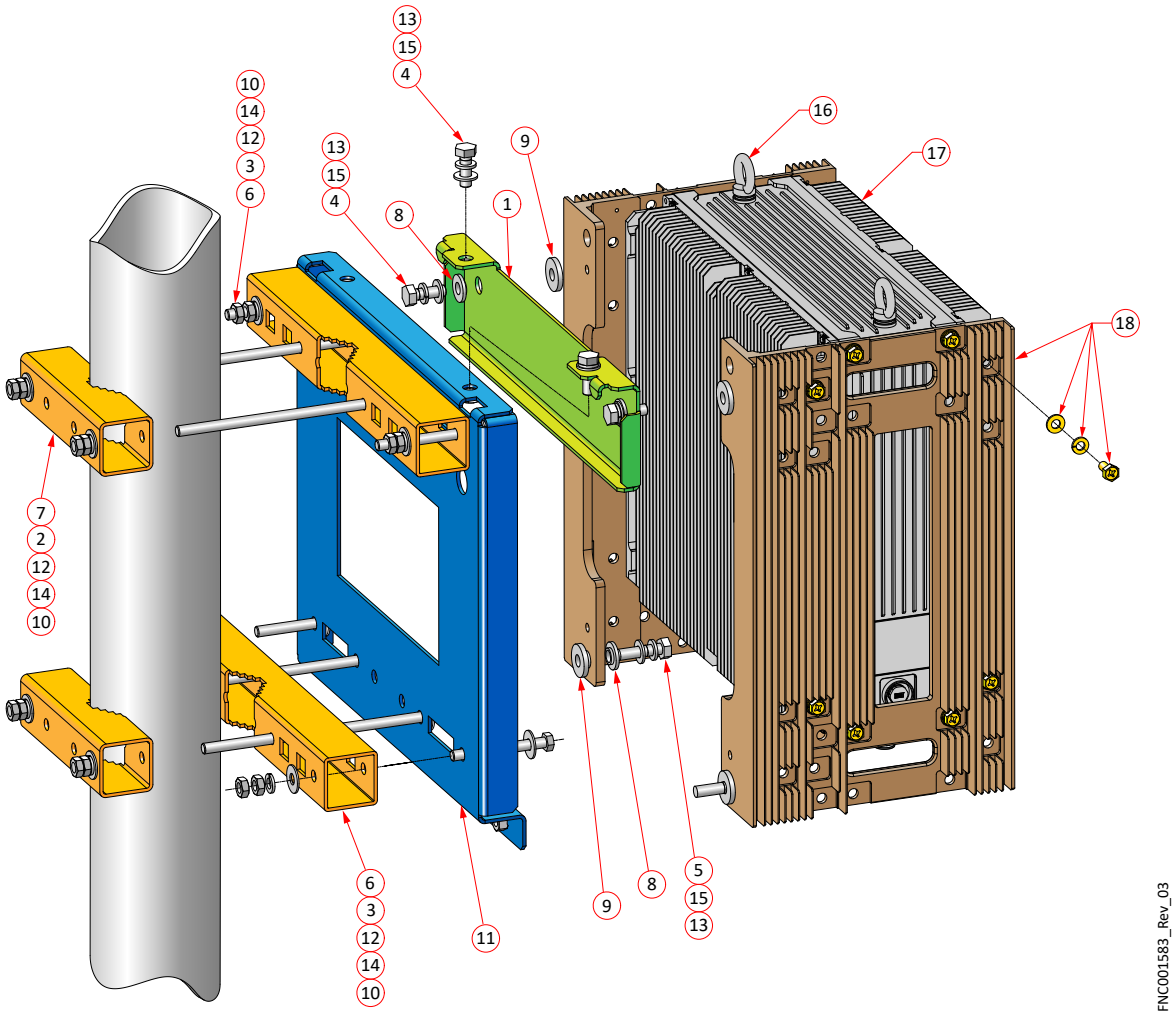

Figure 11
RU Pole Mount Kit

The RU wall mounting kit contains the parts and installation hardware detailed in the following table.

Table 35
Pole Mount Kit Assembly Legend

Item	Description
1	Mounting Plate Adapter
2	Bolt, HEX, HD, 3/16-16 x 10.0 L, 18-8 SS
3	Washer, Split, M10, SS
4	Bolt, HEX HD, M10 x 30L, SS
5	Bolt, HEX HD, M10 x 40L, SS

Table 35 (Cont.)
Pole Mount Kit Assembly Legend

Item	Description
6	Crossmember (Large)
7	Crossmember (Small)
8	Insulator, Washer, Flat, M10
9	Insulator, Washer, Flat, M10
10	Washer, Flat, M10, SS
11	Wall Mount Plate
12	.375 Flat Washer
13	M10 SS Flat Washer
14	.375 Lock Washer
15	M10, SS, Split Washer
16	Eye Bolts
17	Radio Unit
18	L-Brackets with Hardware

The following figure shows how to mount an RU to a outdoor wall using a wall mounting kit.

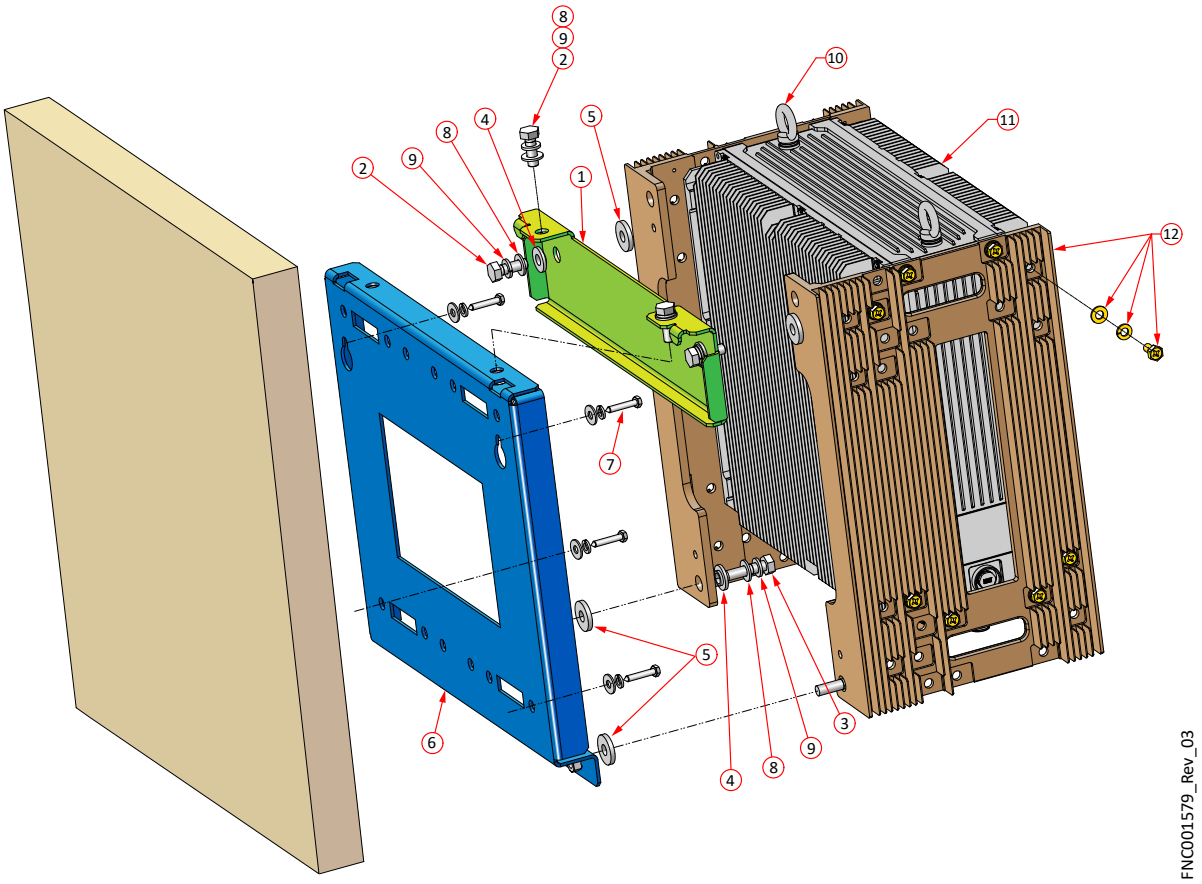

Figure 12
RU Wall Mount

Table 36
Wall Mount Kit Assembly Legend

Item	Description
1	Adapter, Mounting Plate Adapter
2	Bolt, Hex HD, M10 X 30 mm, SS
3	Bolt, Hex HD, M10 X 40 mm, SS
4	Insulator, Step Washer, Flat, M10
5	Insulator, Washer, Flat, M10
6	Plate, Wall Mount
7	Screw Kit, Wall Mount[1]
8	Washer, Flat, M10, SS

Table 36 (Cont.)
Wall Mount Kit Assembly Legend

Item	Description
9	Washer, Split, M10, SS
10	Eye Bolts
11	Radio Unit
12	L-Brackets with Hardware

1 Only used for mounting onto a wood surface. If mounting on another surface, for example, concrete, brick, or unistrut, the proper mounting equipment will need to be acquired.

4.3
Installation Precautions

The following general safety precautions must be observed during operation and service of the product. Failure to comply with these precautions or with specific warnings willfully violates standards of design, manufacture and intended use of the product.

- To avoid danger to local personnel in lightning-prone geographic areas, ensure proper techniques are followed.
- To protect against voltage surges and built-up static charges, ensure that outdoor equipment is properly grounded according to local building and electrical code regulations. In the event of a short circuit, grounding reduces the risk of electrical shock. Refer to Articles 810830 of the National Electrical Code, ANSI/NFPA No. 70, for information on proper grounding and applicable lightning protection for DC cables.
- Determine the source and connection points for building-to-earth ground near the antenna location. Proper grounding of the outdoor equipment reduces electromagnetic interference, provides lightning protection and protects against electrical discharge.
- Do not install or operate this equipment in the presence of flammable gases or flumes. Operation of any electrical instrument in such an environment constitutes a definite safety hazard.
- Do not install substitute parts or perform any unauthorized modification to the equipment. Changes or modifications not expressly approved by the vendor may void authority to operate the equipment.
- Follow local guidelines when attaching an identification tags, for example, to cables, cable ties, and nameplates.
- The radios meet all applicable FCC and UL safety requirements for general population exposure to radio frequency emissions.
- This device complies with FCC Part 1 and Part 15, and UL-cUL Listed at 45 ° C to UL62368-1/60950-22.
- This device may receive interferences that may cause undesired operation.

Les précautions générales de sécurité suivantes doivent être observées pendant l'utilisation et l'entretien du produit. Échec se conformer à ces précautions ou à des avertissements spécifiques viole volontairement les normes de conception, de fabrication et l'utilisation prévue du produit.

- Pour éviter tout danger pour le personnel local dans les zones géographiques exposées à la foudre, assurez-vous que les suivi.
- Pour vous protéger contre les surtensions et les charges électrostatiques accumulées, assurez-vous que l'équipement extérieur est correctement mise à la terre conformément aux réglementations locales du code du bâtiment et de l'électricité. En cas de court-circuit, mise à la terre réduit le risque de choc électrique. Reportez-vous aux articles 810830 du National Electrical Code, ANSI/NFPA n ° 70, pour plus d'informations sur la mise à la terre correcte et la protection contre la foudre applicable pour les câbles CC.
- Déterminez la source et les points de connexion pour la mise à la terre du bâtiment à la terre à proximité de l'emplacement de l'antenne. Correct la mise à la terre de l'équipement extérieur réduit les interférences électromagnétiques, fournit une protection contre la foudre et protège contre les décharges électriques.
- N'installez pas et n'utilisez pas cet équipement en présence de gaz ou de fumées inflammables. Fonctionnement de tout un instrument électrique dans un tel environnement constitue un danger certain pour la sécurité.
- N'installez pas de pièces de remplacement et n'effectuez aucune modification non autorisée de l'équipement. Changements ou les modifications non expressément approuvées par le fournisseur peuvent annuler l'autorisation d'utiliser l'équipement.
- Suivez les directives locales lors de la fixation d'étiquettes d'identification, par exemple sur des câbles, des serre-câbles et plaques signalétiques.
- Les radios répondent à toutes les exigences de sécurité FCC et UL applicables pour l'exposition de la population générale à la radio émissions de fréquence.
- Cet appareil est conforme aux parties 1 et 15 de la FCC et homologué UL-cUL à 45 ° C selon UL62368-1 / 60950-22.
- Cet appareil peut recevoir des interférences susceptibles d'entraîner un fonctionnement indésirable.

- Operation of this device is subject to the following two conditions:
  - This device is not used to cause harmful interference.
  - These radios are designed to withstand weather conditions typically encountered when installed outdoors.

- Le fonctionnement de cet appareil est soumis aux deux conditions suivantes:
  - Cet appareil n'est pas utilisé pour provoquer des interférences nuisibles.
  - Ces radios sont conçues pour résister aux conditions météorologiques généralement rencontrées lorsqu'elles sont installées à l'extérieur.

4.4
Returning of Defective Equipment

Defective equipment must be returned to Fujitsu for repair or replacement which requires a **Return Material Authorization (RMA)**.

If you have purchased TAC support, contact FTAC to assist with equipment failures. FTAC can help with a ***Unit Investigation Request*** **(UIR)**:

Phone: 1-800-USE-FTAC (1-800-873-3822)

Online: https://partners.fnc.fujitsu.com (Partners account required)

If you have not purchased TAC support for the product or for issues related to packaging/physical defects, contact Order Management in Richardson, Texas, to obtain instructions and an **RMA** number:

Phone: 1-800-525-0303

Email: order_admin@fujitsu.com

Online: https://partners.fnc.fujitsu.com (Partners account required)

Note: To use the online **RMA** request tool, establish a Partners account and contact Order Management to have the RMA request tool added to the account.

4.5 RU Installation

In this section:

4.5.1 Installation Prerequisites
4.5.2 Attach L-Brackets and Eye Bolts
4.5.3 Attach RU Mounting Adapter Plate
4.5.4 Attach RU to Pole
4.5.5 Attach RU to Wall

The following procedures describe how to install the RU.

Note: All hardware is stainless steel that will not corrode.

Note: Use care when handling the RU, as it is heavy. Fujitsu recommends installing the RU on a two-person team to avoid damage to the unit or injury to the user. If the RU is to be installed at a high location, Fujitsu recommends using lifting equipment to hoist the RU by a pair of eye bolts mounted on the RU.

4.5.1 Installation Prerequisites

Installation requires the following basic tools and accessories:

- Power cable
- Optical cable
- RF cables
- RET cable
- Frame ground cable
- SFP
- Torque wrench
- Torx® screwdriver
- Metric and SAE toolkit
- Screw drivers
- Wire strippers

Note: This list of tools and accessories is the minimum required to install the RU. Depending on the situation, more may be required. Any additional tools required for each installation procedure need to be identified and prepared before starting installation.

Caution: The RU is heavy. Fujitsu recommends installing the RU with a two-person team to avoid damage to the unit or injury to the user.

Attention: Le RU est lourd. Fujitsu recommande d'installer l'EF sur une équipe de deux personnes pour éviter d'endommager l'appareil ou des blessures à l'utilisateur.

4.5.2 Attach L-Brackets and Eye Bolts

This procedure describes how to attach the L-brackets and eye bolts to the RU.

Recommended Tools:

- 13 mm socket
- 5/8 in. wrench
- Power tools (optional)
- Metric and SAE toolkit

Note: If the RU is to be installed at a high location, Fujitsu recommends using lifting equipment to hoist the RU by a pair of eye bolts mounted on the RU.

Step 1
With the RU on its side and using the Radio Bracket Kit (PCD4B780-0007-C001), install the L-brackets to each side of the RU, securing them using the M8 screws, flat and split washers.

Note: Ensure proper L-bracket positioning on the RU. Refer to Figure 13 for an example.

Step 2
Torque each M8 bolt to 9.28 Nm to secure the L-brackets to the RU.

Step 3
Screw in two M8 eye bolts (PCD4B780-0008-C001) with flat and split washers in the two holes on top of the RU and torque them to 13.4 Nm.

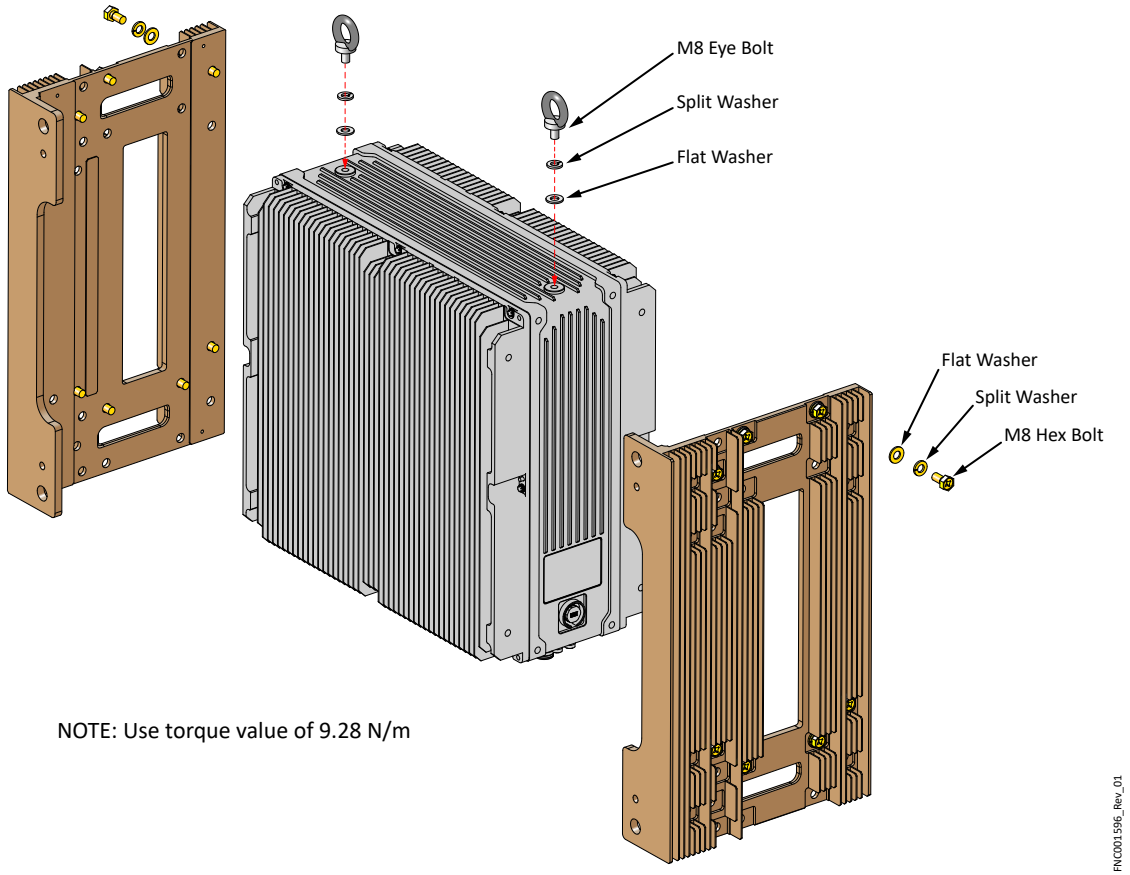

Figure 13
Installing L-Brackets and Eye Bolts

Continue with the next task.

4.5.3
Attach RU Mounting Adapter Plate

This procedure describes how to attach the mounting adapter plate to the RU.

Prerequisites:

- Loctite LB 8012 or equivalent lubricant applied to all bolts
- 17 mm socket
- 5/8 in. wrench

- Power tools (optional)
- Metric and SAE toolkit

Step 1
With the RU on its back, align flat bushings with the smaller holes at the top of each L-bracket and place the adapter plate on top with the holes also aligned.

Step 2
Insert step bushings into each of the adapter plate holes. Ensure the shoulder of the stepped bushing is perfectly fit inside of the hole on the L-bracket for proper alignment.

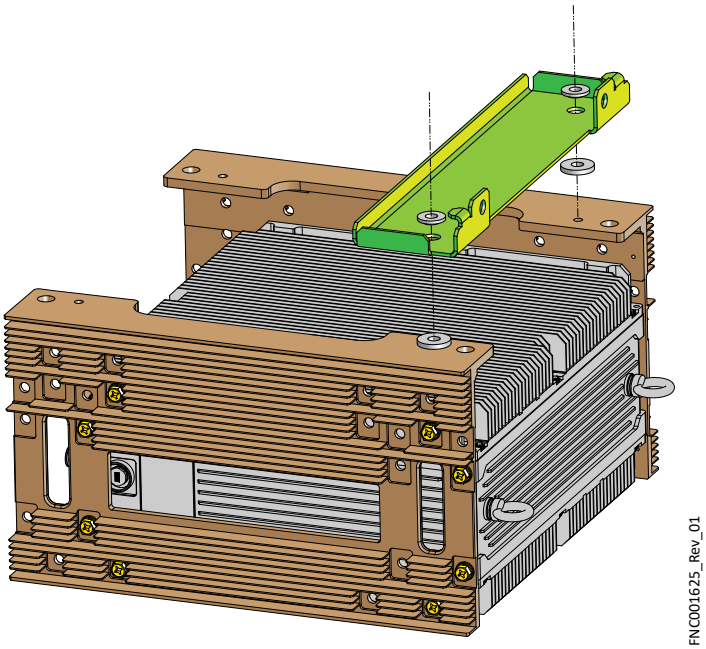

Figure 14
Aligning Mounting Adapter Plate and Bushings

Step 3
Secure the mounting adapter plate to the L-Brackets using M10 x 30 screws with flat and split washers as shown in the following graphic.

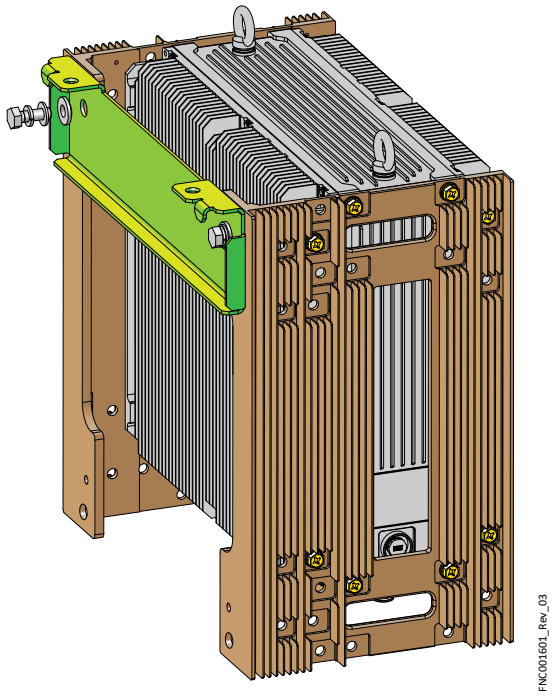

Figure 15
Securing Mounting Adapter Plate

Step 4
Torque the M10 x 30 bolts to 27 Nm.

✓ **This task is complete.**

4.5.4
Attach RU to Pole

This procedure describes how to attach a RU to a pole using a pole mount kit.

Prerequisites:

- Loctite LB 8012 or equivalent lubricant applied to bolts
- 17 mm socket
- 13 mm socket
- 5/8 in. wrench
- Torque wrench

- Philips screw driver
- Power tools (optional)
- Metric and SAE toolkit

Caution: All power and cabling to the RU must be disconnected from the RU before starting this procedure.

Caution: The RU is heavy. Fujitsu recommends removing the RU on a two-person team to avoid damage to the unit or injury to the user.

Attention: Toute l'alimentation et le câblage doivent être déconnectés de l'EF avant de commencer cette procédure.

Attention: Le RU est lourd. Fujitsu recommande de retirer l'EF d'une équipe de deux personnes pour éviter d'endommager l'appareil ou des blessures à l'utilisateur.

Step 1
Attach both large crossmembers to the Wall Mounting Plate using 3/8-16 x 3.5L bolts, nuts, and flat washers as shown in the following figure.

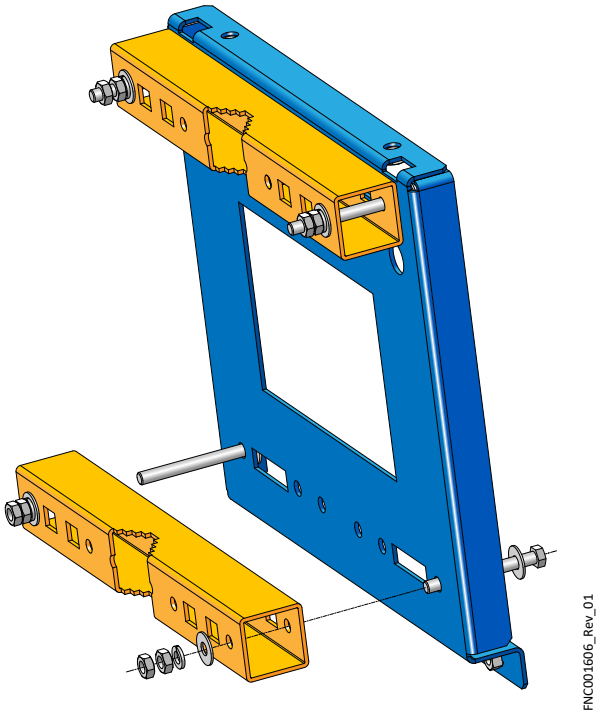

Figure 16
Attach Large Crossmembers to Wall Mount Plate

Step 2
Secure the large crossmembers to the mounting plate until tightened using a 9/16 socket for the bolts and a 5/8 in. wrench for the nuts.

Step 3
Add jam nuts to each 3/8-16 x 3.5L bolts and secure until tightened.

Step 4
Connect the small crossmembers from opposite side of pole to the large crossmembers on the mounting plate using four 3/8-16 x 10L bolts, washers, and nuts as shown in Figure 17. Secure them together using a 17 mm socket.

Note: Fujitsu recommends a second person assist with this step.

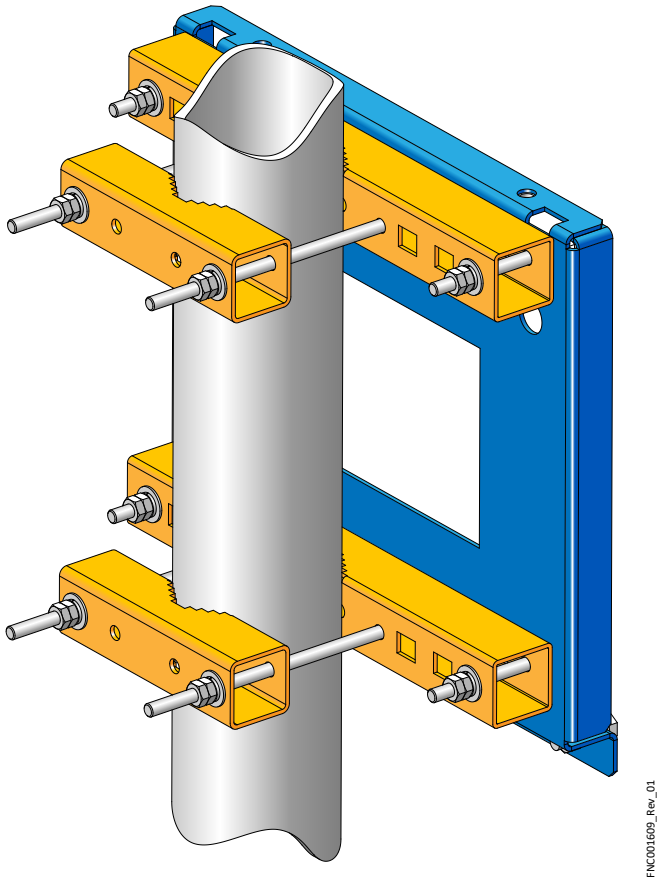

Figure 17
Pole Mount Crossmembers

Step 5
Add jam nuts to each 3/8-16 x 10L bolts and secure until tightened.

Step 6
Place large insulating bushings on the wall plate by performing the following substeps:

a) Peel the adhesive covering off of the large insulating bushings.

b) Align the sticky side of the insulating bushings with the threaded holes on the lower front lip of the wall plate and stick them in place as shown in the following graphic.

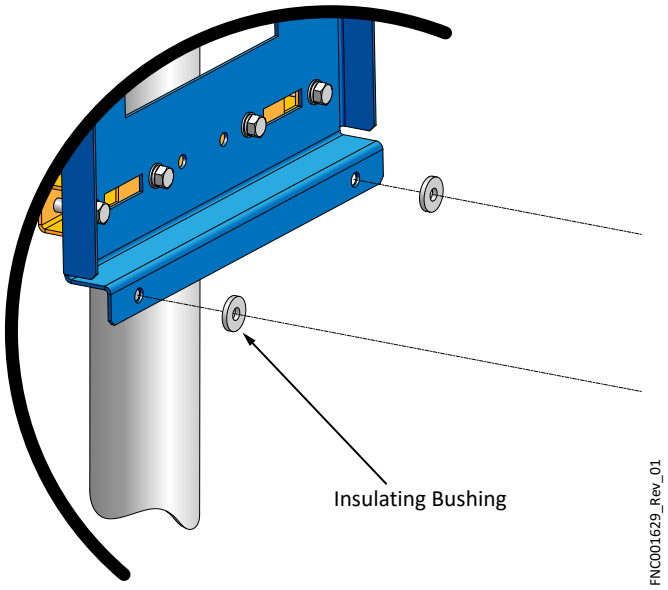

Figure 18
Attach Insulating Bushings

Step 7
Mount the RU to the pole by aligning the hooks on the plate adapter with the two holes at the top of the wall mounting plate.

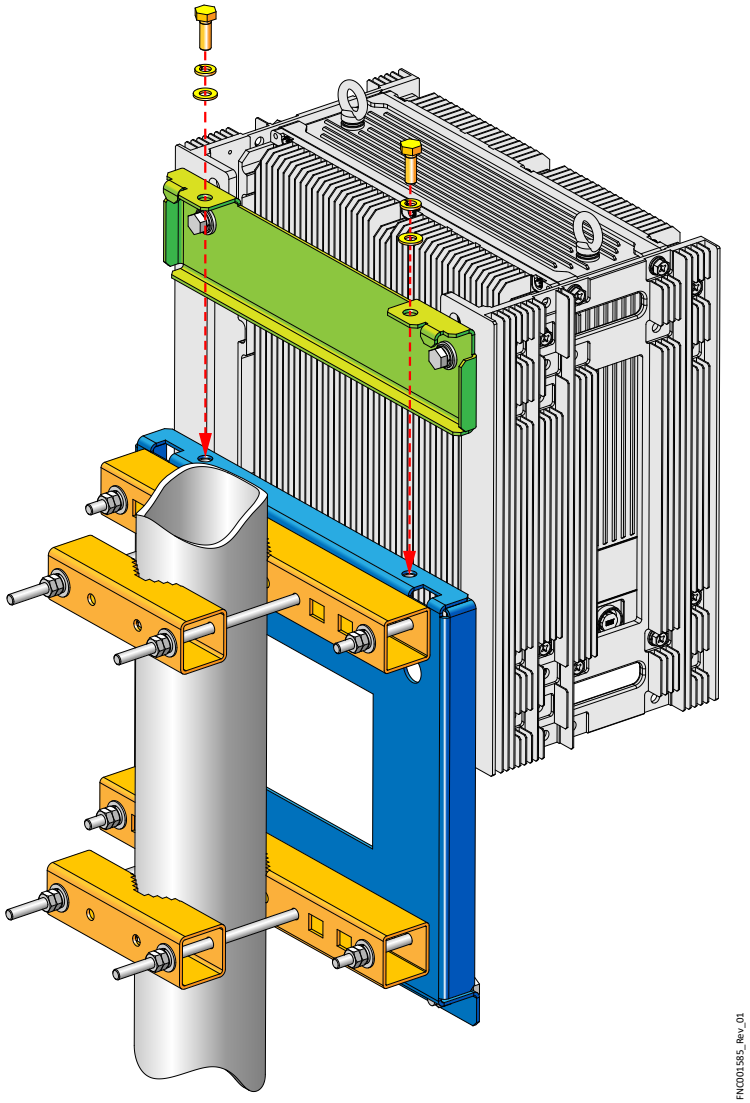

Figure 19
Mount RU on Wall Mounting Plate

Note: If necessary, use the eye bolts to hoist the RU up the pole.

Step 8
Using a 17 mm socket, secure the mounting adapter plate to the mounting plate using M10 x 30 mm bolts and split and flat washers. Do not tighten the bolts yet.

Step 9
Secure the L-brackets to the mounting adapter plate using two M10 x 40 mm bolts, split washers, and flat washers.

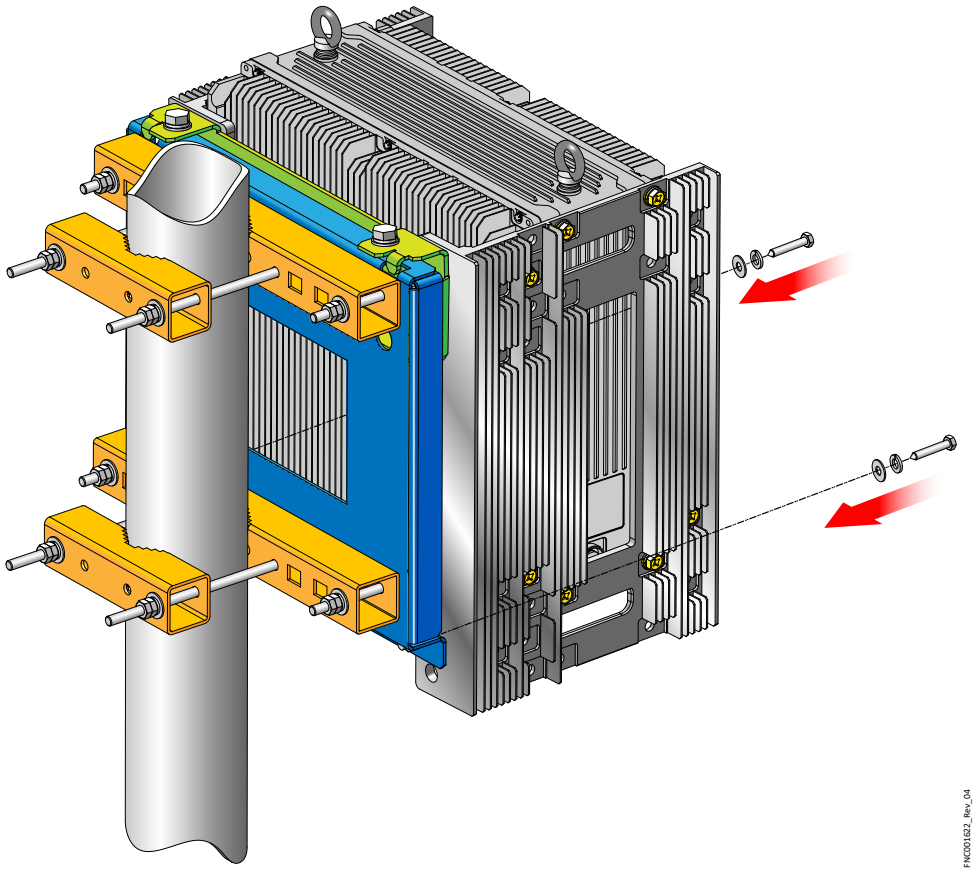

Figure 20
Connect L-Brackets to Plate

Step 10
Torque each bolt on the top and bottom of the mounting plate using a 11/16 socket to 27 Nm.

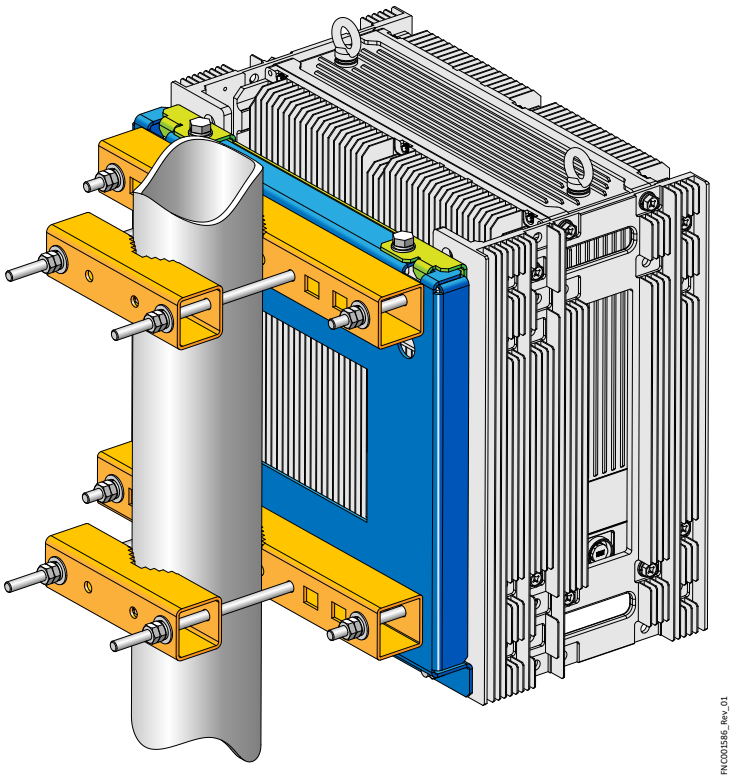

Figure 21
Pole Mount Final Result

✓ **This task is complete.**

4.5.5
Attach RU to Wall

This procedure describes how to mount the RU to a wall using the Wall Mounting Kit.

Prerequisites:

- Loctite LB 8012 or equivalent lubricant applied to all bolts
- 17 mm socket
- 5/8 in. wrench
- Philips screw driver
- Power tools (optional)
- Metric and SAE toolkit

Caution: All power and cabling to the RU must be disconnected from the RU before starting this procedure.

Caution: The RU is heavy. Fujitsu recommends removing the RU on a two-person team to avoid damage to the unit or injury to the user.

Attention: Toute l'alimentation et le câblage doivent être déconnectés de l'EF avant de commencer cette procédure.

Attention: Le RU est lourd. Fujitsu recommande de retirer l'EF d'une équipe de deux personnes pour éviter d'endommager l'appareil ou des blessures à l'utilisateur.

Note: The screws included in the Wall Mount Kit are intended for installing the RU onto a wood surface. To install on other surfaces, for example, concrete, brick, or unistrut, the appropriate hardware mounting anchors must be acquired separately.

Note: Always ensure that the mounting surface and anchors can withstand up to 240 lbs (108.862 kg) of weight.

Step 1
Install the Wall Mounting Plate to a designated wall location using M10 bolts with flat and split washers in each of the four holes circled in the following graphic to secure it in place.

Note: The wall mount plate can be used to mark the location for the bolts on the wall surface prior to installation.

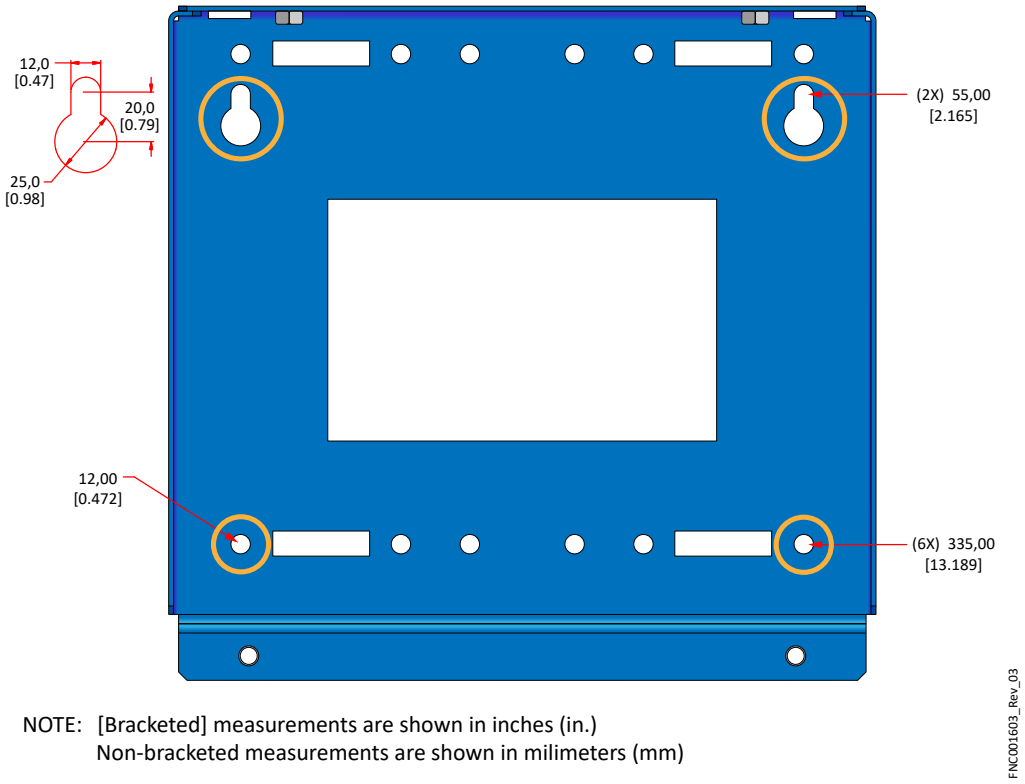

NOTE: [Bracketed] measurements are shown in inches (in.)
Non-bracketed measurements are shown in milimeters (mm)

Figure 22
Wall Mount Plate

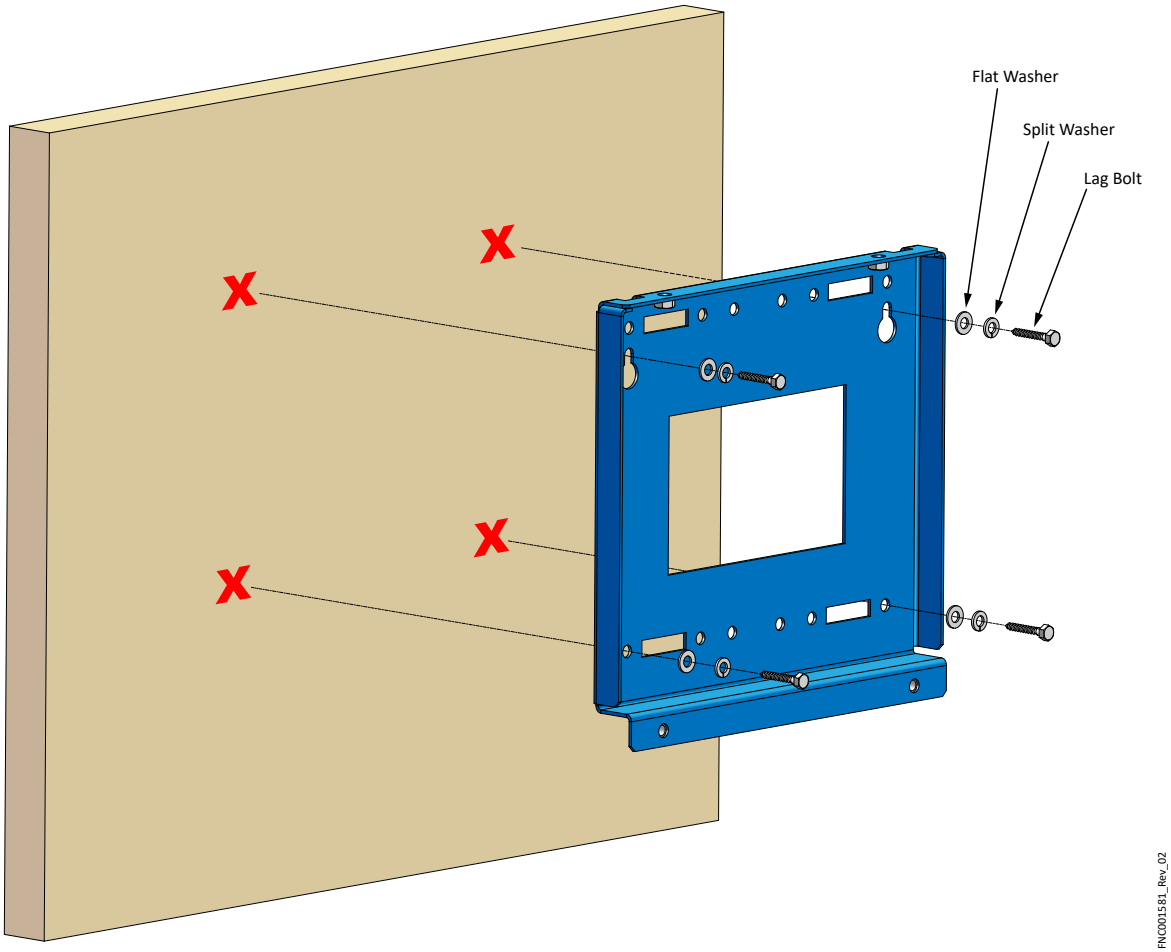

Figure 23
Attaching Wall Mount Plate to Wall Surface

Step 2
Torque each of the four bolts to 27 Nm.

Step 3
Place large insulating bushings on the wall plate by performing the following substeps:

a) Peel the adhesive covering off of the large insulating bushings.

b) Align the sticky side of the bushings with the threaded holes on the lower front lip of the wall plate and stick them in place as shown in the following graphic.

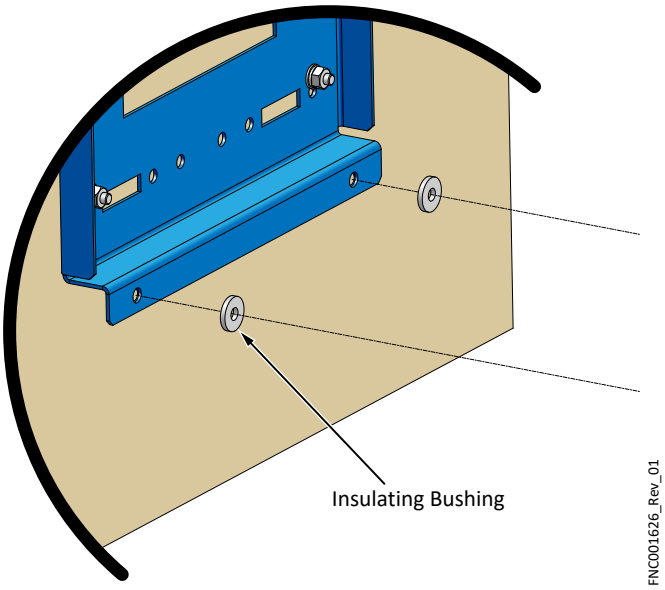

Figure 24
Adhesive Insulating Bushing

Step 4
Align the holes on the Wall Mount Plate Adapter with the holes on the top of the Wall Mount Plate and hook it in place.

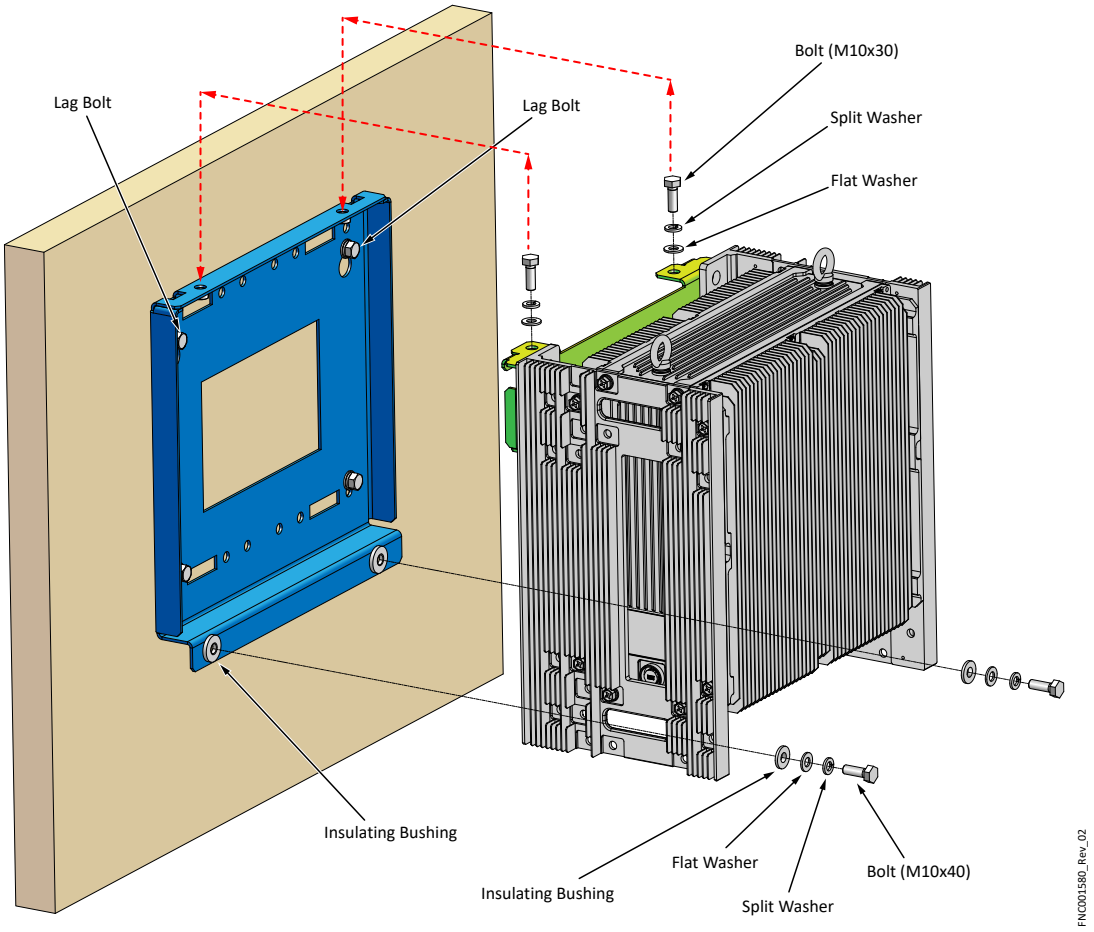

Figure 25
Attaching Radio to Wall Mount Plate

Step 5
Secure the RU in place using M10 bolts by performing the following substeps:

a) Loosely screw two M10 x 30 bolts into the holes on the top of the RU with flat and split washers used for spacing.

b) Loosely screw two M10 x 40 bolts into the holes on the lower front of the RU with an insulating stepped bushing and flat and split washers used for spacing. Ensure the shoulder of the stepped bushing is perfectly fit inside of the hole on the L-bracket for proper alignment.

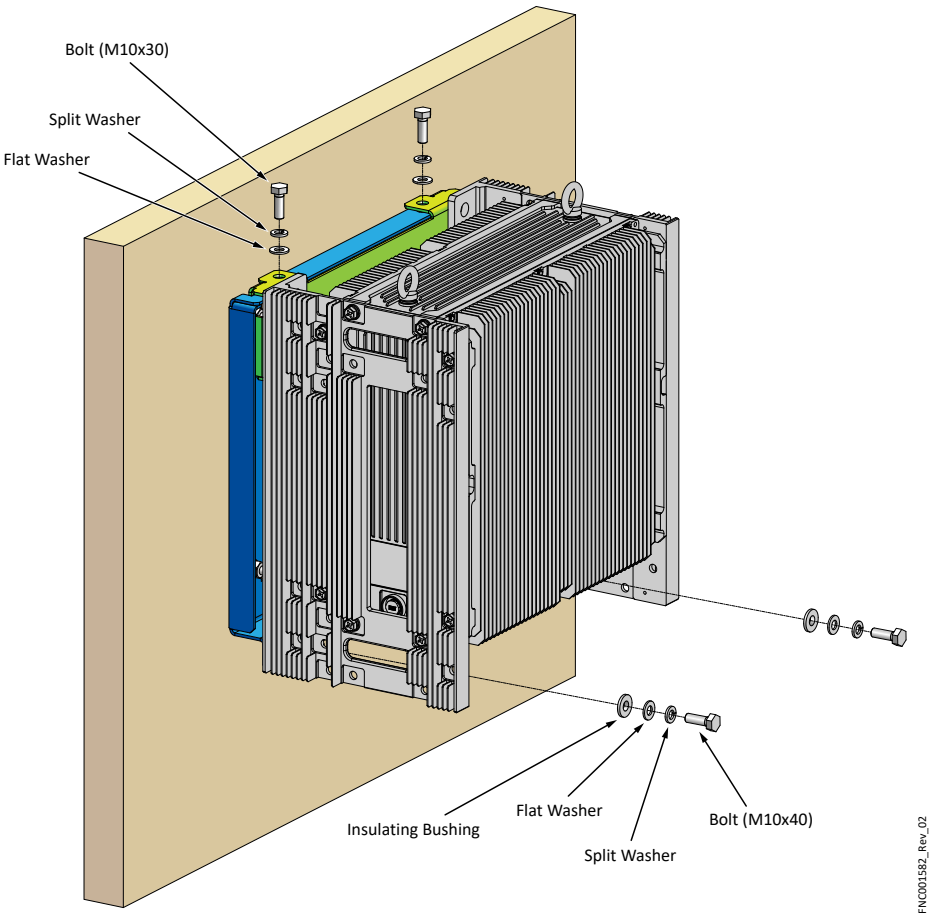

Figure 26
Securing RU to Wall Mount Plate

Step 6
Torque all four M10 bolts to 27 Nm to secure the RU in place.

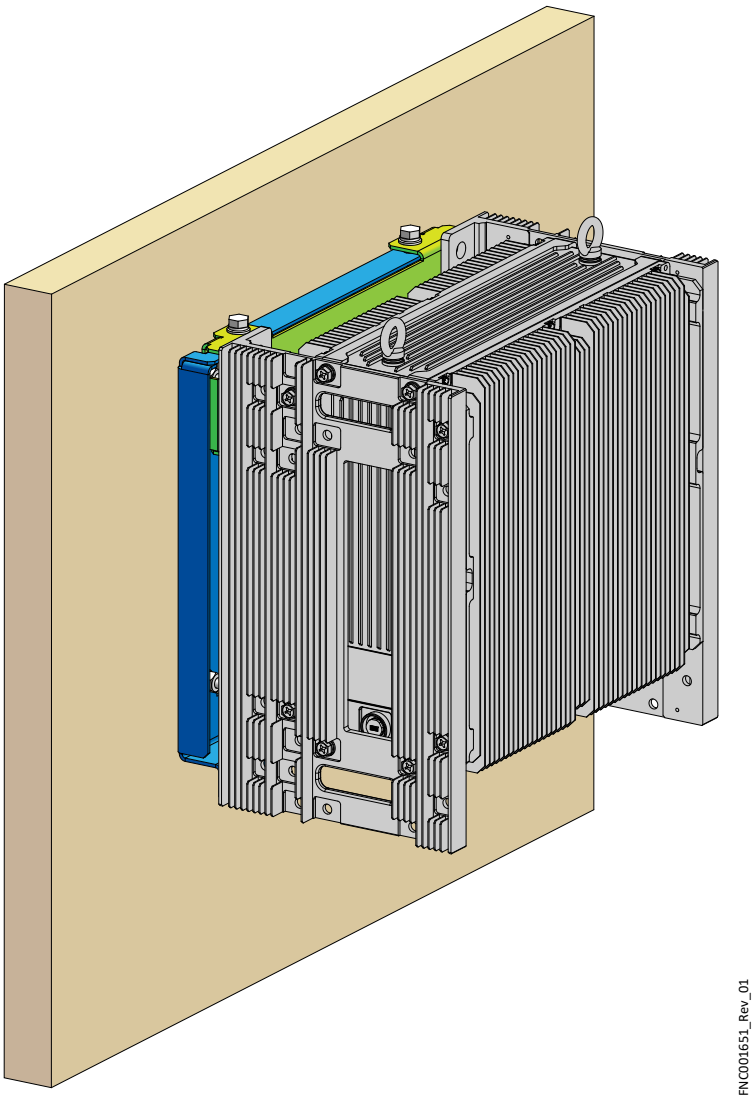

Figure 27
Wall Mount Final Result

Continue with the next task.