4.6 Cable Installation

In this section:

4.6.1 Connect Frame Ground Cable
4.6.2 Connect eCPRI Optical Cable
4.6.3 Connect AISG Cables
4.6.4 Connect RF Cables
4.6.5 Connect DC –48 V Power Cable

The following sections describe how to connect all necessary cables to the RU.

Important: Do not use a cable that contains red phosphorus as a flame retardant. This may cause problems, for example, heat generation and emitting smoke.

Important: Ensure the cable connector gland or clamp is the correct size for the selected cable diameter to prevent water ingress.

4.6.1 Connect Frame Ground Cable

This procedure describes how to connect a Frame Ground (FG) cable to the RU.

Prerequisites:

- RU mounted and not powered up
- Available AWG ground cable with two hole lug (green or green with yellow stripe, 0.625 mm hole spacing)
- Weatherproofing method to prevent moisture intrusion
- 13 mm socket
- Philips screwdriver

Danger: Use properly insulated tools and perform all safety precautions in accordance with local safety practices when working on or around power terminals, power cables, and power connectors. Contacting power terminals, uninsulated conductors, cable wiring, or any connector that could be part of a live electrical circuit can result in death or serious personal injury.

Danger: Utilisez des outils correctement isolés et appliquez toutes les précautions de sécurité conformément à la sécurité locale pratiques lorsque vous travaillez sur ou autour des bornes d'alimentation, des câbles d'alimentation et des connecteurs d'alimentation. Contacter bornes d'alimentation, conducteurs non isolés, câblage de câbles ou tout connecteur pouvant faire partie d'un un circuit électrique peut entraîner la mort ou des blessures graves.

Caution: The outdoor equipment must be properly grounded to provide protection against lightning strikes, voltage surges and built-up static charges. In the event of a short circuit, grounding reduces the risk of electrical shock. For installation in the USA refer to Articles 810-840 of the National Electrical Code, ANSI/NFPA No. 70, for information with respect to proper grounding and applicable lightning protection for telecom equipment and cabling. The installer must also follow any additional local building and electrical code regulations.

Attention: L'équipement extérieur doit être correctement mis à la terre pour assurer une protection contre la foudre, les surtensions et les charges statiques accumulées. En cas de court-circuit, la mise à la terre réduit le risque de choc électrique. Pour une installation aux États-Unis, reportez-vous aux articles 810-840 du National Electrical Code, ANSI / NFPA No. 70, pour obtenir des informations sur la mise à la terre appropriée et la protection contre la foudre applicable pour les équipements de télécommunications et le câblage. L'installateur doit également suivre toute réglementation locale supplémentaire du code du bâtiment et de l'électricité.

Step 1
Locate the FG port on the RU.

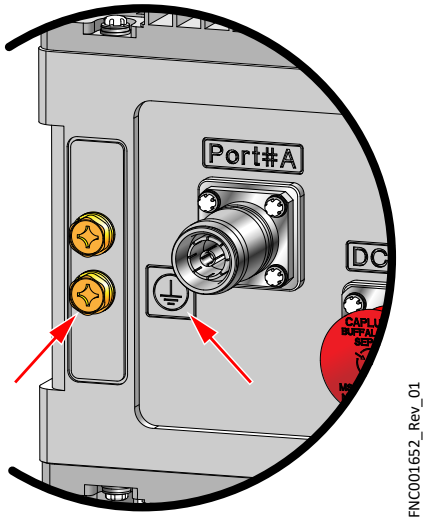

Figure 28
Frame Ground Port

Step 2
Using a screwdriver or 13 mm socket, remove the screws at the ground point of the RU.

Step 3
Connect the RU end of the ground cable to the RU using M8 bolts.

Step 4
Connect the other end of the FG cable to a building exterior ground location.

Step 5
Apply weatherproofing to the FG cable connector per local guidelines to protect from moisture intrusion.

Note: Fujitsu recommends using industry standard UL approved self-fusing tape, but users may use any UL approved weatherproofing material. Refer to Weatherproofing RU Connections for more information about weatherproofing methods.

✓ **This task is complete.**

4.6.2
Connect eCPRI Optical Cable

This procedure describes how to connect optical cable to the RU.

Prerequisites:

- RU mounted and not powered up
- Available 10G optical cable
- Weatherproofing method to prevent moisture intrusion

Danger: Use properly insulated tools and perform all safety precautions in accordance with local safety practices when working on or around power terminals, power cables, and power connectors. Contacting power terminals, uninsulated conductors, cable wiring, or any connector that could be part of a live electrical circuit can result in death or serious personal injury.

Danger: Utilisez des outils correctement isolés et appliquez toutes les précautions de sécurité conformément à la sécurité locale pratiques lorsque vous travaillez sur ou autour des bornes d'alimentation, des câbles d'alimentation et des connecteurs d'alimentation. Contacter bornes d'alimentation, conducteurs non isolés, câblage de câbles ou tout connecteur pouvant faire partie d'un un circuit électrique peut entraîner la mort ou des blessures graves.

Step 1
Remove the protective cover from the eCPRI port.

Note: The optical SFP must be installed in the RU Optical port before the RU is connected to the DU.

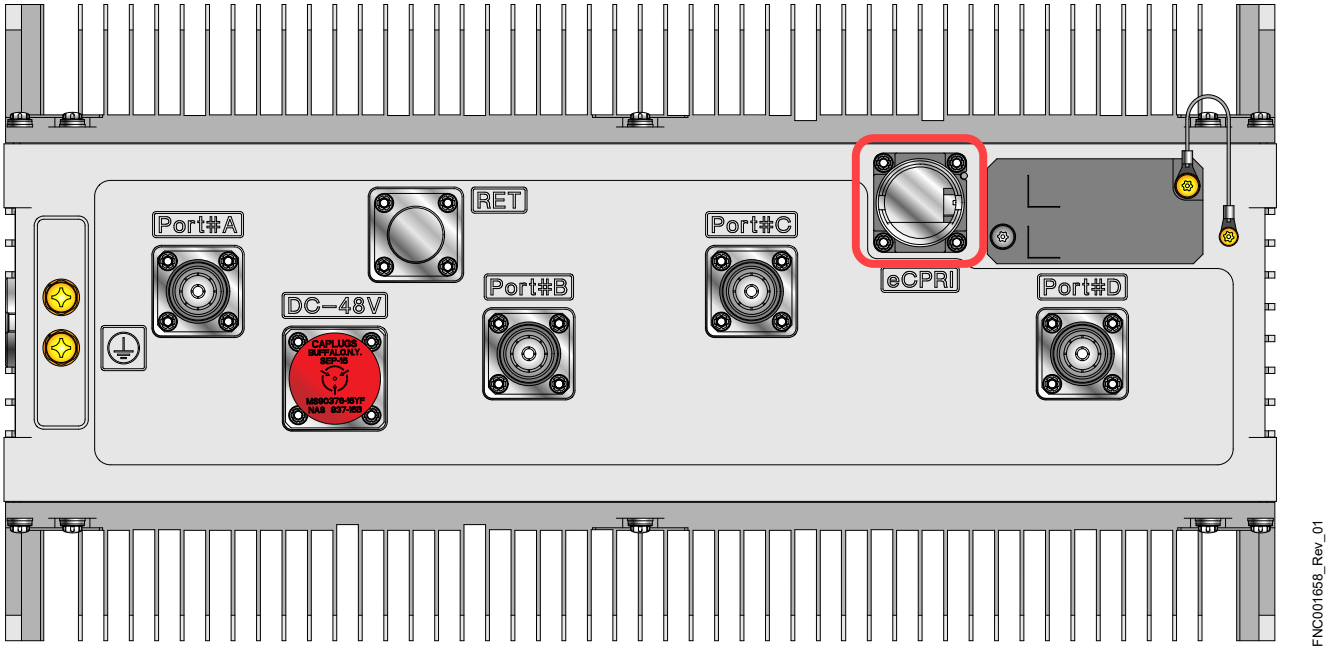

Figure 29
eCPRI Port Location

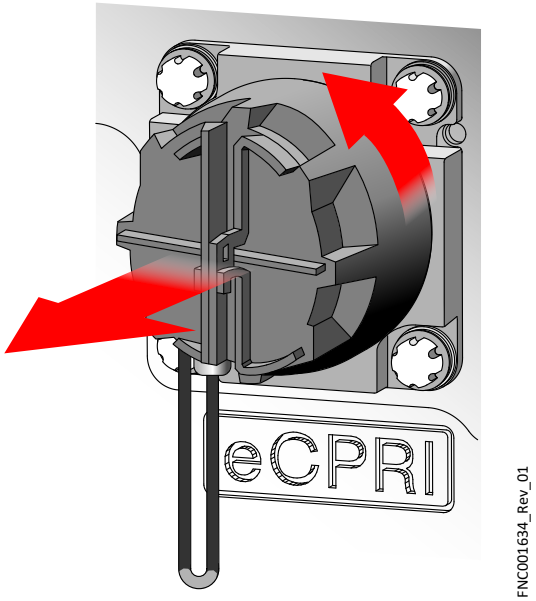

Figure 30
Remove Protective Cap

Step 2
Install the SFP into the eCPRI port.

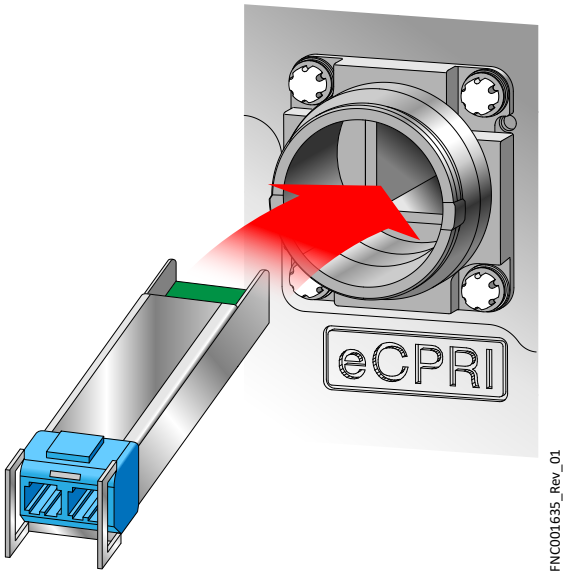

Figure 31
Insert SFP Module

Step 3
Push the SFP into the port until the lever closes fully.

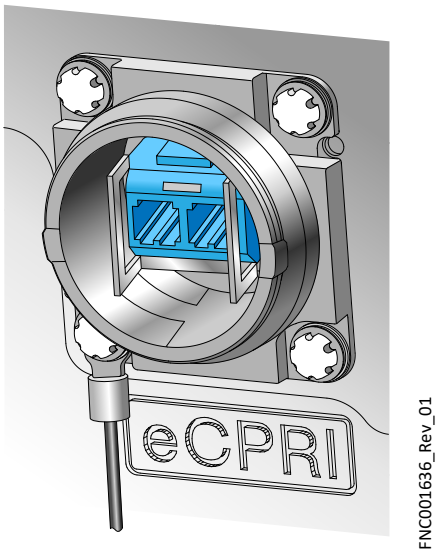

Figure 32
SFP Module Inserted

Step 4
Remove the protective covers from both mating connectors.

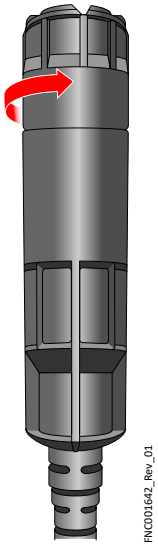

Figure 33
Remove Protective Cover

Step 5
Remove the fiber caps from the optical cables.

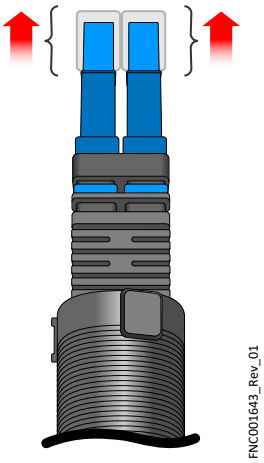

Figure 34
Remove Cap from Optical Cable

Step 6
Pull back on the fiber enclosure until the cylindrical cable container is completely visible.

Step 7
Clean the optical fiber connections.

Note: For more information about cleaning optical connectors, refer to LC End Surface Cleaning and End Surface Cleaning In LC.

Step 8
Insert the optical cables into the SFP that is pre-positioned in the connector of the RU.

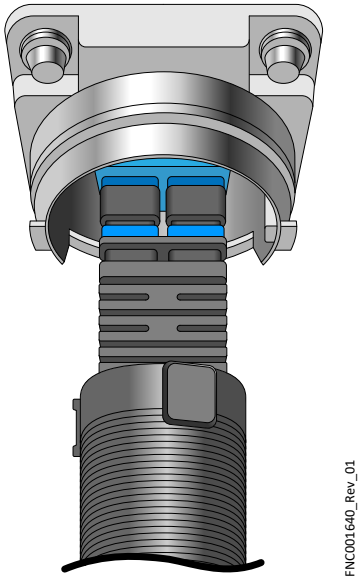

Figure 35
Insert Optical Fiber

Step 9
Ensure the locking latches of the LC fiber connectors are snapped into position.

Step 10
Align the connector key on connector to the connector on the RU and insert the connector.

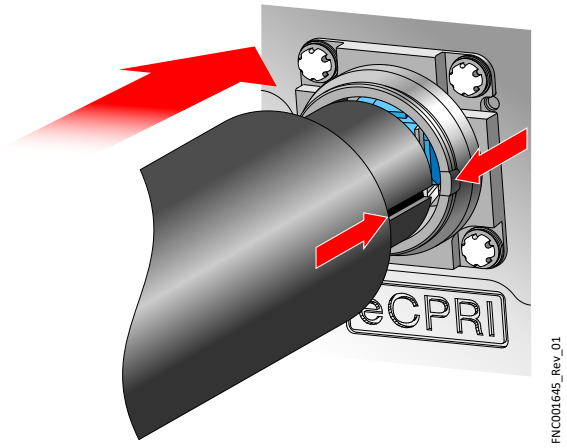

Figure 36
Align Connector

Step 11
Insert the cable and turn the enclosure sub-assembly clockwise until it clicks into place.

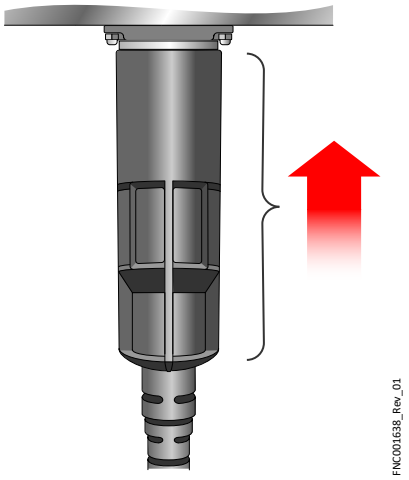

Figure 37
Insert Connector

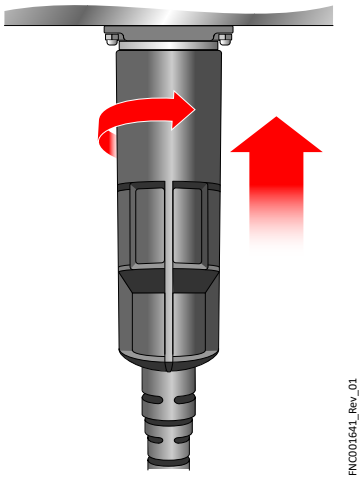

Figure 38
Secure Enclosure

Step 12
Mate the two protective covers together to keep the covers intact and clean.

Step 13
Apply weatherproofing to the SFP cable connector per local guidelines to protect from moisture intrusion.

Note: Fujitsu recommends using industry standard UL approved self-fusing tape, but users may use any UL approved weatherproofing material. Refer to Weatherproofing RU Connections for more information about weatherproofing methods.

Continue with the next task.

4.6.3
Connect AISG Cables

This procedure describes how to connect AISG cables to the RU.

Prerequisites:

- RU mounted and not powered up
- Available AISG cables
- Weatherproofing method to prevent moisture intrusion

Step 1
Remove the protective cover from the RET port.

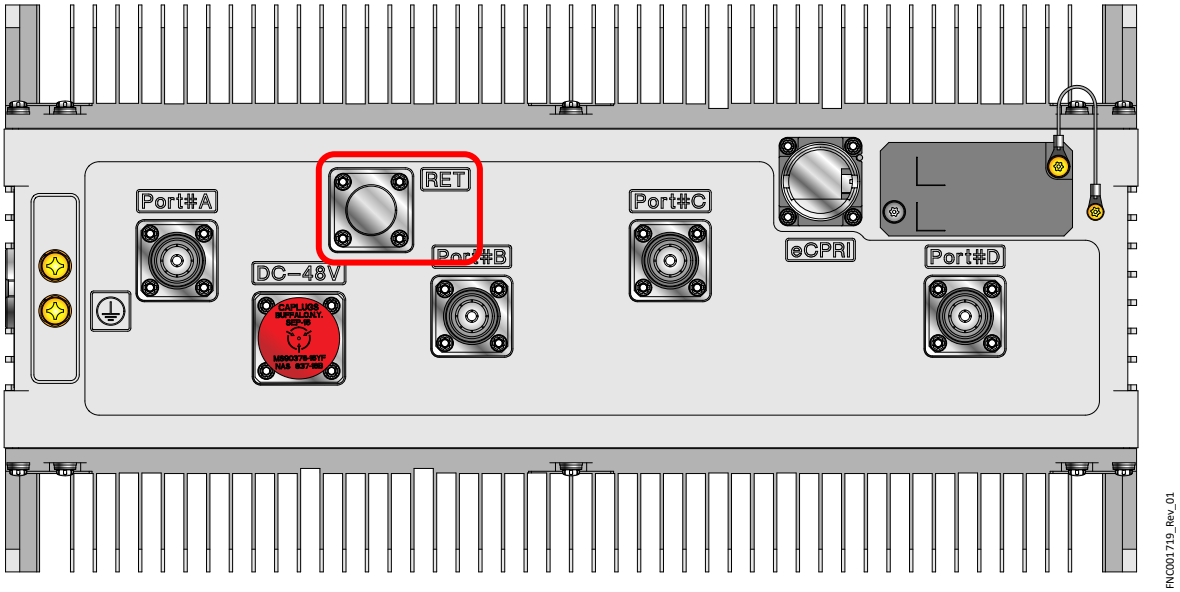

Figure 39
RET Port Location

Step 2
Install the AISG cable to the RET port on the bottom of the RU.

Step 3
Route the cable to the respective port on the antenna.

Step 4
Connect the AISG cable to the RET port on the antenna and tighten until firm.

Step 5
Tighten the outer connector shell to secure the cable. Repeat for the antenna end of the cable.

Step 6
Apply weatherproofing to the AISG cable connector per local guidelines to prevent moisture intrusion.

Note: Fujitsu recommends using industry standard UL approved self-fusing tape, but users may use any UL approved weatherproofing material. Refer to Weatherproofing RU Connections for more information about weatherproofing methods.

Continue with the next task.

4.6.4
Connect RF Cables

This procedure describes how to connect RF cables to the RU.

Prerequisites:

- RU mounted and not powered up
- RF Cables
- Weatherproofing method to prevent moisture intrusion

Warning: Avoid excessive power input to prevent RU damage. The maximum absolute input level of the Rx port is +3.5 dBm (5 minute max) based on 3GPP in-band blocking specifications.

Avertissement: Évitez une alimentation électrique excessive pour éviter d'endommager RU. Le niveau d'entrée absolu maximal du port Rx est de +3,5 dBm (5 minutes maximum) sur la base des spécifications de blocage dans la bande 3GPP.

Step 1
Remove the protective covers from the RF ports on the bottom of the RU.

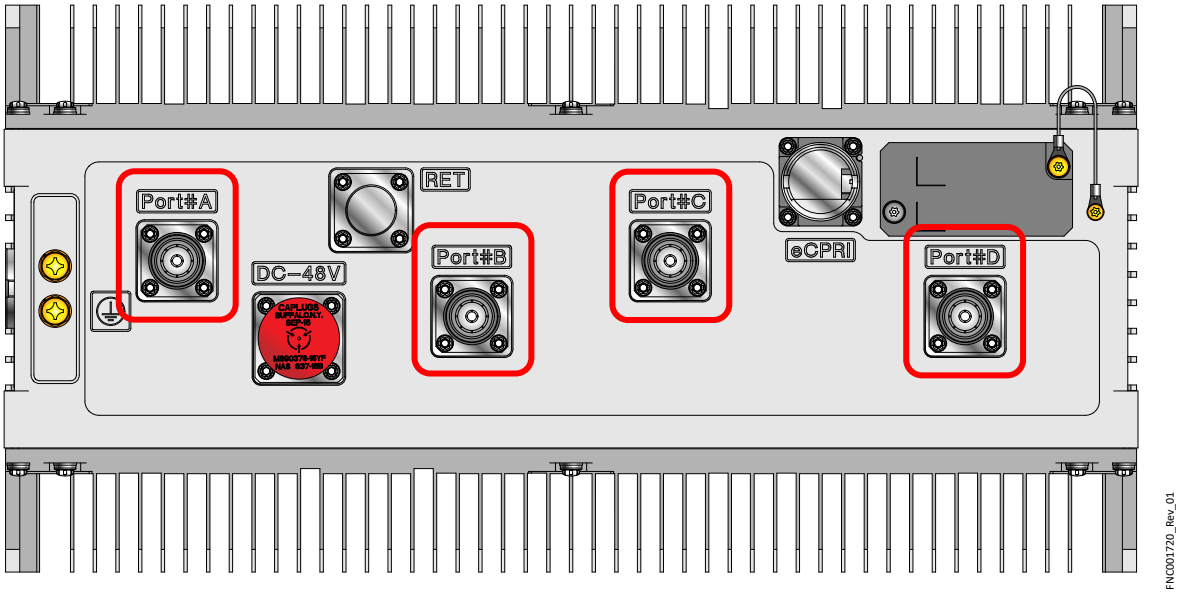

Figure 40
RF Port Locations

Step 2
If necessary, insert two weatherproofing sleeves onto each cable.

Step 3
Connect each RF cable to its corresponding port on the RU.

Step 4
Secure the RF cables along their route.

Step 5
Torque each connection to 5 N/m.

Step 6
Apply weatherproofing to the RF cable connectors per local guidelines to protect from moisture intrusion.

Note: Fujitsu recommends using industry standard UL approved self-fusing tape, but users may use any UL approved weatherproofing material. Refer to Weatherproofing RU Connections for more information about weatherproofing methods.

Continue with the next task.

4.6.5 Connect DC –48 V Power Cable

This procedure describes how to connect DC –48 V power cable.

Prerequisites:

- Torx driver
- RU mounted and not powered up
- Available –48V power cable

Important: If the power cable connector on the RU is connected in reverse, the RU does not start and is not damaged because of the anti-reverse circuit.

Step 1
Remove the dust cover from the DC –48V port on the bottom of the RU.

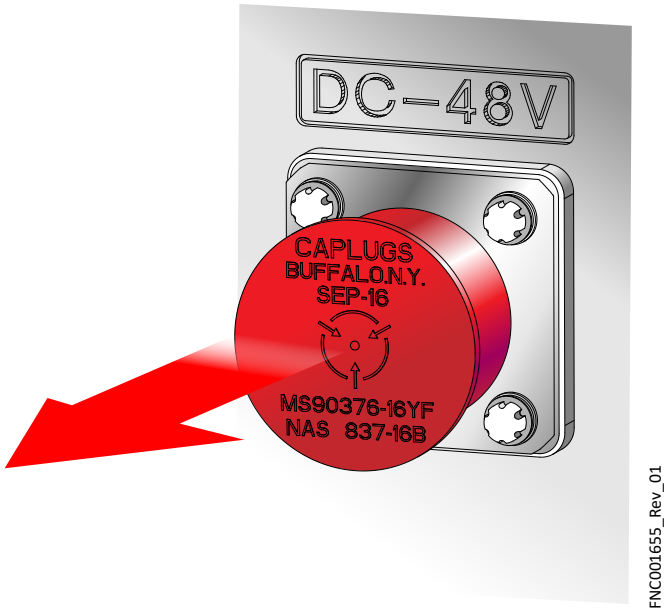

Figure 41
Remove Dust Cover

Step 2
Align the key in the plug with the inner and outer connector grooves.

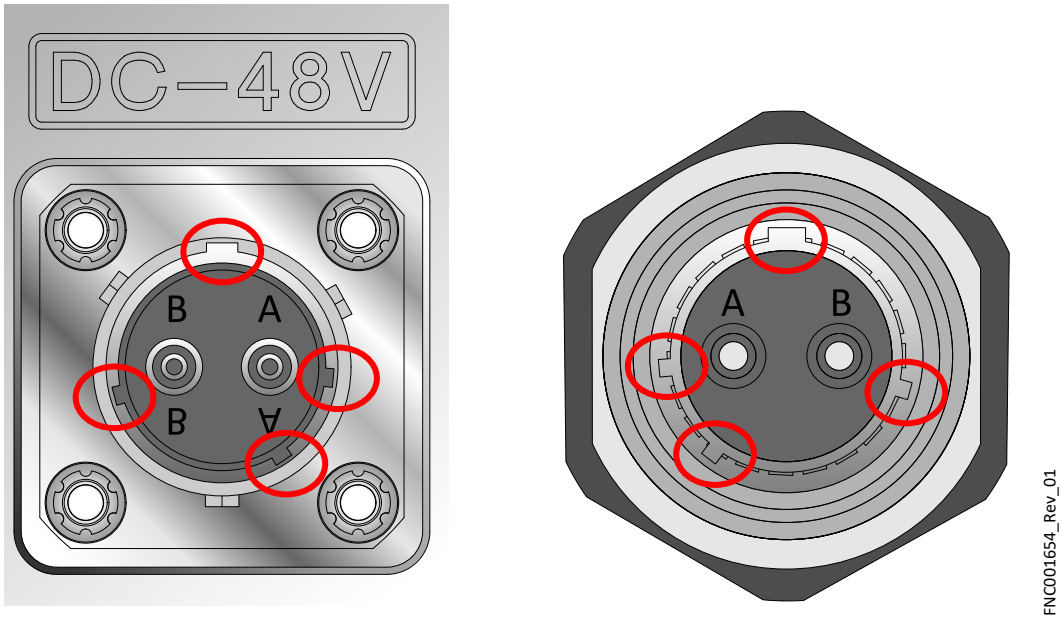

Figure 42
Align Key Plug with Port

Step 3
Insert the connector into the port.

Note: The RU has reverse-polarity protection in case the DC power leads are connected incorrectly.

Step 4
Turn the locking ring clockwise until tightened.

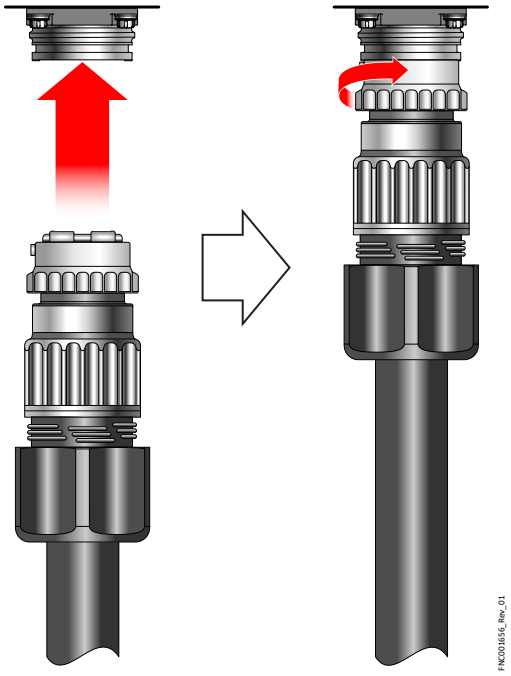

Figure 43
Tighten Power Cable

✓ **This task is complete.**

5
Power Up

In this chapter:

5.1 Check Connections and DC Power Polarity
5.2 Apply Power to RU
5.3 Check LED Status
5.4 LED Display
5.5 Verify Alarm Status
5.6 RU Confirmation

Prior to powering up the RU, the following criteria must be completed:

- Circuit breaker is off prior to connecting the RU
- All cables at RU connected and terminated
- Optical SFP installed
- Antenna connection is complete
- Weatherproofing applied to all cable connectors

Warning: Avoid excessive power input to prevent RU damage. The maximum absolute input level of the Rx port is +3.5 dBm (5 minute max) based on 3GPP in-band blocking specifications.

Avertissement: Évitez une alimentation électrique excessive pour éviter d'endommager RU. Le niveau d'entrée absolu maximal du port Rx est de +3,5 dBm (5 minutes maximum) sur la base des spécifications de blocage dans la bande 3GPP.

Important: The RU does not have a power switch. DC power on/off is controlled by the circuit breaker of the DC power source. The circuit breaker must be set to off before applying power to the RU.

Note: The RU requires less than one minute to fully power up.

Powering up an RU has the following environmental requirements:

- Keep the temperature and humidity within the specified conditions.
- Do not place around objects that obstruct the flow of air.

- Do not input optical signals higher than the maximum light level as this may damage the optical receiver.
- Do not submerge or bury in snow.

5.1
Check Connections and DC Power Polarity

This procedure describes how to perform checks before turning on the power.

Step 1
Verify that all necessary cables are connected to the RU.

Step 2
Check the polarity of Pin A on the DC power supply, which should read −48 V.

Note: The RU does not have a power switch. DC power is controlled by a circuit breaker at the DC power source. Do not turn on the circuit breaker until it's time to power up the RU.

Note: It takes less than one minute for the RU to fully power up.

Step 3
Verify weatherproofing is applied to each cable connector according to local guidelines.

Note: Fujitsu recommends using industry standard UL approved self-fusing tape, but users may use any UL approved weatherproofing material. Refer to Weatherproofing RU Connections for more information about weatherproofing methods.

Continue with the next task.

5.2
Apply Power to RU

This procedure describes how to apply power to the RU.

Step 1
Set the circuit breaker to ON at the DC power supply.

Note: Reset starts when RU detects power on.

Step 2
Wait approximately one minute for the RU to fully power up.

Continue with the next task.

5.3
Check LED Status

This procedure describes how to check the LED status after powering up the RU.

Step 1
Using a Torx screw driver, remove the maintenance window cover to check the LED color, which should be blinking green.

Note: Refer to *RU LED Status* table in LED Display section for LED indicator information.

Caution: If the power to the RU is turned off, a minimum 10-second wait is required before it is turned back on to allow the RU to initialize.

Attention: Si l'alimentation du RU est coupée, une attente minimale de 10 secondes est nécessaire avant de la mettre sous tension. de nouveau pour permettre à l'EUR de s'initialiser.

Note: If the fault LED is on, check the connections at the RU and power source and optical connection sources to resolve the issue.

Note: If the LED is not blinking green after reset, then RU status is not in a normal state.

Step 2
Close the maintenance window cover.

Continue with the next task.

5.4
LED Display

The status of the RU LEDs, as shown in the following figure, should be checked when the RU is powered up.

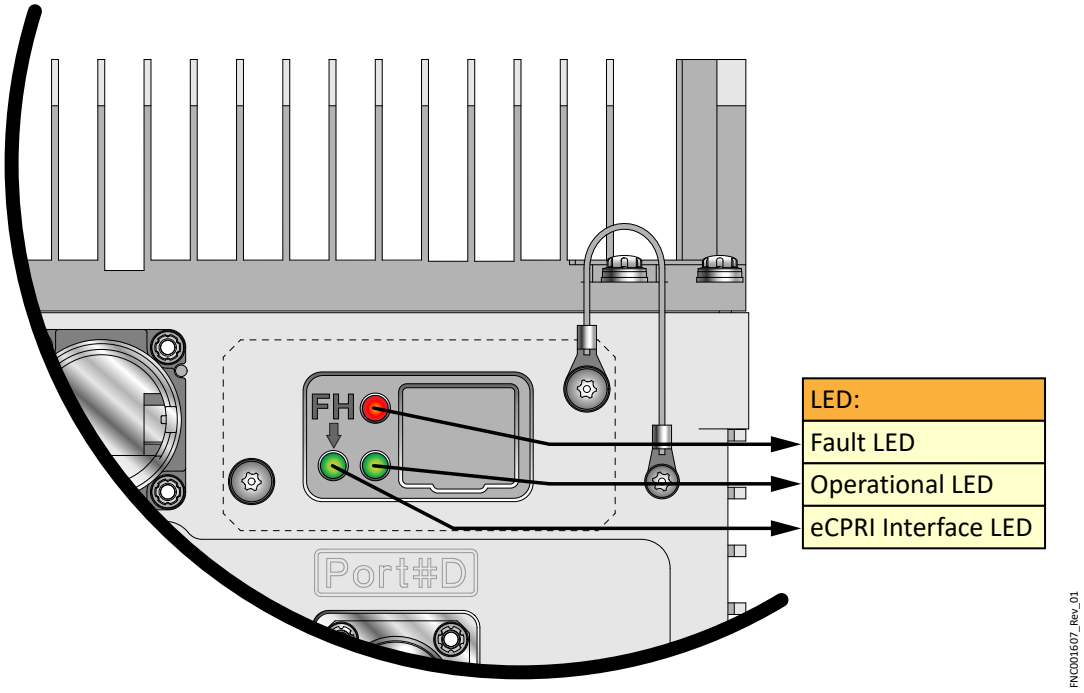

Figure 44
RU LED Locations

The following table shows the status of the LEDs.

Table 37
RU LED Status

RU Status	LED		
	Operation	Fault	Fronthaul
Operational	Green blinking	Red off	n/a
Transmit ON	Green on	Red off	n/a
Blocking	Green blinking	Red blinking	n/a
Major Alarm	Green off	Red blinking	n/a
Minor Alarm	Green blinking or Green on	Red blinking	n/a

Table 37 (Cont.)
RU LED Status

RU Status	LED		
	Operation	Fault	Fronthaul
L1 disconnection	n/a	n/a	n/a
L1 link found (M-Plane not found)	n/a	n/a	Green blinking
L1 & M-Plane link found	n/a	n/a	Green on

5.5
Verify Alarm Status

This procedure describes how to verify any active alarms on a newly set up RU.

Step 1
Contact customer NOC to verify they have visibility of the RU and to verify if any active alarms are present.

Note: If any alarms or conditions exist, create trouble tickets as needed to address them.

Step 2
Confirm with the customer that the work is completed successfully.

Step 3
Clean up area before leaving the customer premises.

✓ **This task is complete.**

5.6
RU Confirmation

The RU must be receiving configuration information from the DU during the confirmation. The method and procedure of the confirmation are presented by the DU vendor.

6
Maintenance and Trouble Clearing

In this chapter:

6.1 RU Alarms
6.2 Replace RU Mounted on Pole
6.3 Replace RU Mounted on Wall

6.1
RU Alarms

The EMS detects and reports the alarms as described in the following tables. The details of critical, major, and minor alarms are subject to change.

Table 38
Unit out of order

Probable Cause	Severity	Corrective Action
RU is broken/abnormal operation ***Note:*** Stops all RF transmission	Critical	Reset

Table 39
Soft alarm

Probable Cause	Severity	Corrective Action
Software on RU is operating abnormally	Critical	Reset

Table 40
Initialization failure

Probable Cause	Severity	Corrective Action
Software on RU is operating abnormally ***Note:*** Stops all RF transmission	Critical	Reset

Table 41
Fronthaul Port Status Change

Probable Cause	Severity	Corrective Action
SFP not implemented SFP LOS SFP TxFault SFP 12C Access NG L1 OFF M-Plane OFF ***Note:*** Stops all RF transmission	Critical	Reestablish L1 link or M-Plane

Table 42
Node Voltage out-of-range condition

Probable Cause	Severity	Corrective Action
Node voltage is out of range ***Note:*** Stops all RF transmission	Critical	Shift to normal voltage range

Table 43
Node Temperature out of range condition (high temp)

Probable Cause	Severity	Corrective Action
Temperature is too high ***Note:*** Stops all RF transmission	Critical	Fall below the threshold temperature

Table 44
Node Temperature out of range condition (low temp)

Probable Cause	Severity	Corrective Action
Temperature is too low	Major	Adjust node temperature to within the RU threshold operating temperature

Table 45
TX Power status change

Probable Cause	Severity	Corrective Action
TxGainALM (Port#A~#D) ***Note:*** Stops RF transmission at port with alarm	Major	Reset

Table 46
Cold start

Probable Cause	Severity	Corrective Action
RU too cold ***Note:*** Stops all RF transmission ***Note:*** PA device on	Major	Raise the temperature to at least -20 °C

Table 47
Node shutdown

Probable Cause	Severity	Corrective Action
Node is shut down ***Note:*** Reports alarm only	Major	Take no action

Table 48
Sync status changes

Probable Cause	Severity	Corrective Action
Sync failed Sync not connected Out-of-sync Desynchronization ***Note:*** Stops all RF transmission	Major	Reestablish synchronization

Table 49
IQ over Input

Probable Cause	Severity	Corrective Action
IQ over Input ALM ***Note:*** Stops RF transmission at port with alarm	Major	Reset

Table 50
VSWR alarm

Probable Cause	Severity	Corrective Action
VSWR ALM ***Note:*** Stops RF transmission at port with alarm	Major	Reset

Table 51
RX out of order

Probable Cause	Severity	Corrective Action
RxGainALM ***Note:*** Stops RF transmission at port with alarm	Major	Reset

Table 52
Internal PS alarm

Probable Cause	Severity	Corrective Action
DC power failure has occurred inside the RU ***Note:*** Stops all RF transmission	Major	Reset

Table 53
AISG PS alarm

Probable Cause	Severity	Corrective Action
Voltage supplied to the AISG is abnormal	Major	Check voltage and reset

Table 54
Channel Frequency Change

Probable Cause	Severity	Corrective Action
Channel frequency has changed ***Note:*** Reports alarm only	Minor	Take no action

Table 55
RU Parameter change

Probable Cause	Severity	Corrective Action
RU parameter has changed ***Note:*** Reports alarm only	Minor	Take no action

Table 56
RU Local Access Attempt

Probable Cause	Severity	Corrective Action
A local access attempt has been made on the RU	Minor	Take no action

6.2
Replace RU Mounted on Pole

This procedure describes how to replace a RU that is mounted on a pole.

Prerequisites:

- Loctite LB 8012 or equivalent lubricant applied to bolts
- 1/2, 7/16, and 11/16 sockets
- 5/8 in. wrench
- Torque wrench
- Philips screw driver
- Power tools (optional)
- Metric and SAE toolkit

Caution: All power and cabling must be disconnected from the RU before starting this procedure.

Caution: The RU is heavy. Fujitsu recommends removing the RU on a two-person team to avoid damage to the unit or injury to the user.

Attention: Toute l'alimentation et le câblage doivent être déconnectés de l'EF avant de commencer cette procédure.

Attention: Le RU est lourd. Fujitsu recommande de retirer l'EF d'une équipe de deux personnes pour éviter d'endommager l'appareil ou des blessures à l'utilisateur.

Step 1
If necessary, attach hoisting equipment to eye bolts on top of the RU.

Step 2
Remove the M10 x 40 bolts from the bottom of the mounting plate.

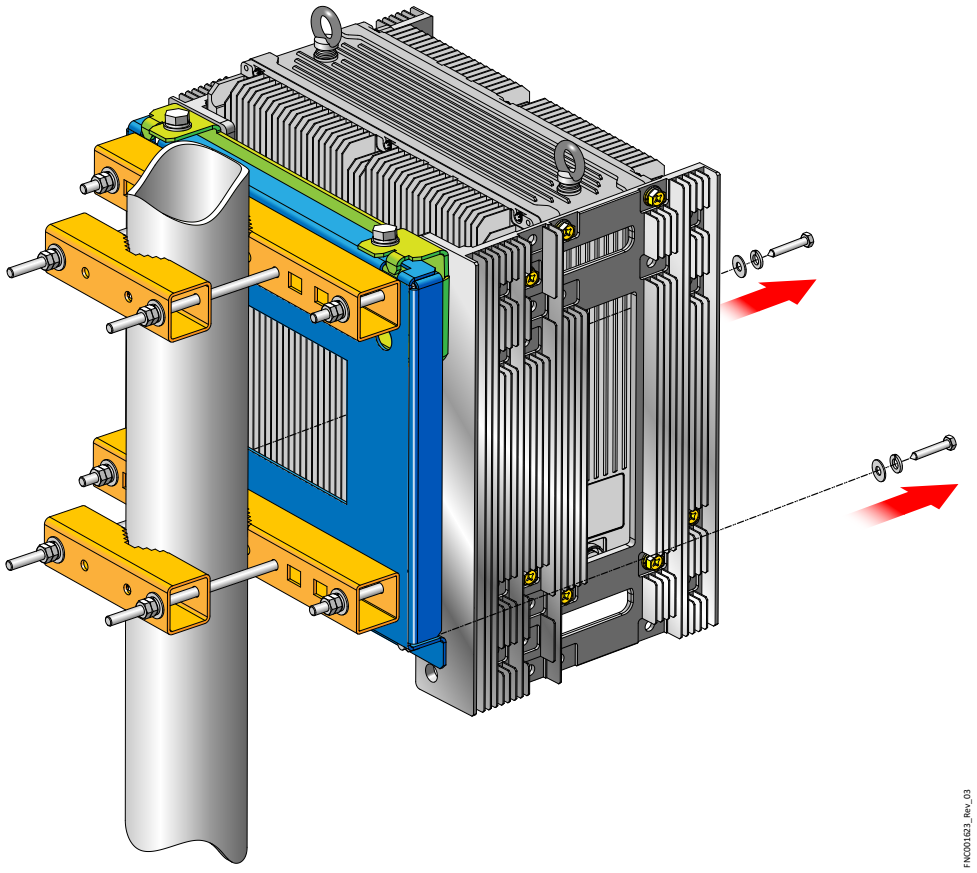

Figure 45
Remove Bottom L-Bracket Bolts

Step 3
Remove the M10 x 30 mm bolts from the top of the mounting plate.

Step 4
Cautiously lift the RU from the mounting plate and lower to the ground using the eye bolts per local guidelines.

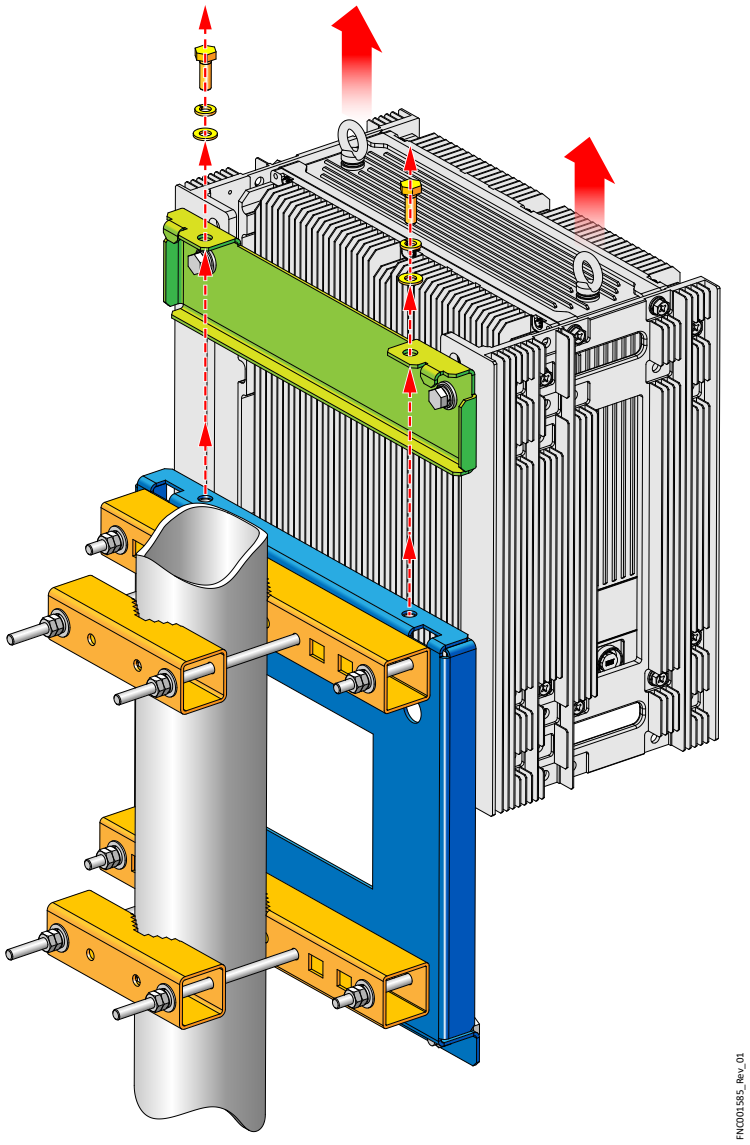

Figure 46
Remove RU from Pole Mount

Step 5
Mount the replacement RU to the pole by aligning the hooks on the plate adapter with the two holes at the top of the wall mounting plate.

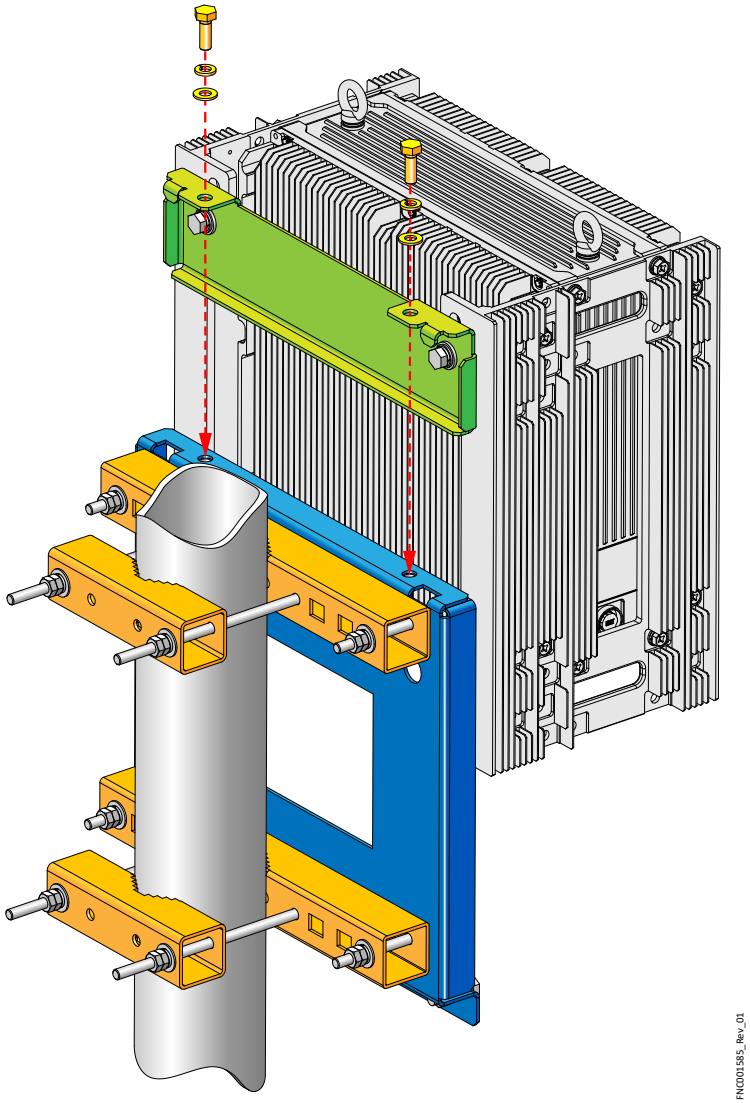

Figure 47
Mount RU on Pole Mount

Note: If necessary, use the eye bolts to hoist the RU up the pole.

Step 6
Using a 17 mm socket, secure the mounting adapter plate to the mounting plate using M10 x 30 mm bolts and split and flat washers. Do not tighten the bolts yet.

Step 7
Torque each bolt on the top and bottom of the mounting plate using a 11/16 socket to 27 Nm.

✓ **This task is complete.**

6.3
Replace RU Mounted on Wall

This procedure describes how to replace a RU that is mounted on a wall.

Prerequisites:

- Loctite LB 8012 or equivalent lubricant applied to all bolts
- 17 mm socket
- 5/8 in. wrench
- Philips screw driver
- Power tools (optional)
- Metric and SAE toolkit

Caution: All power and cabling must be disconnected from the RU before starting this procedure.

Caution: The RU is heavy. Fujitsu recommends installing the RU with a two-person team to avoid damage to the unit or injury to the user.

Attention: Toute l'alimentation et le câblage doivent être déconnectés de l'EF avant de commencer cette procédure.

Attention: Le RU est lourd. Fujitsu recommande de retirer l'EF d'une équipe de deux personnes pour éviter d'endommager l'appareil ou des blessures à l'utilisateur.

Step 1
If necessary, attach hoisting equipment to eye bolts on top of the RU.

Step 2
Remove the two M10 x 40 bolts and washers from the front bottom of the RU.

Step 3
Remove the two M10 x 30 bolts and washers from the top of the RU.

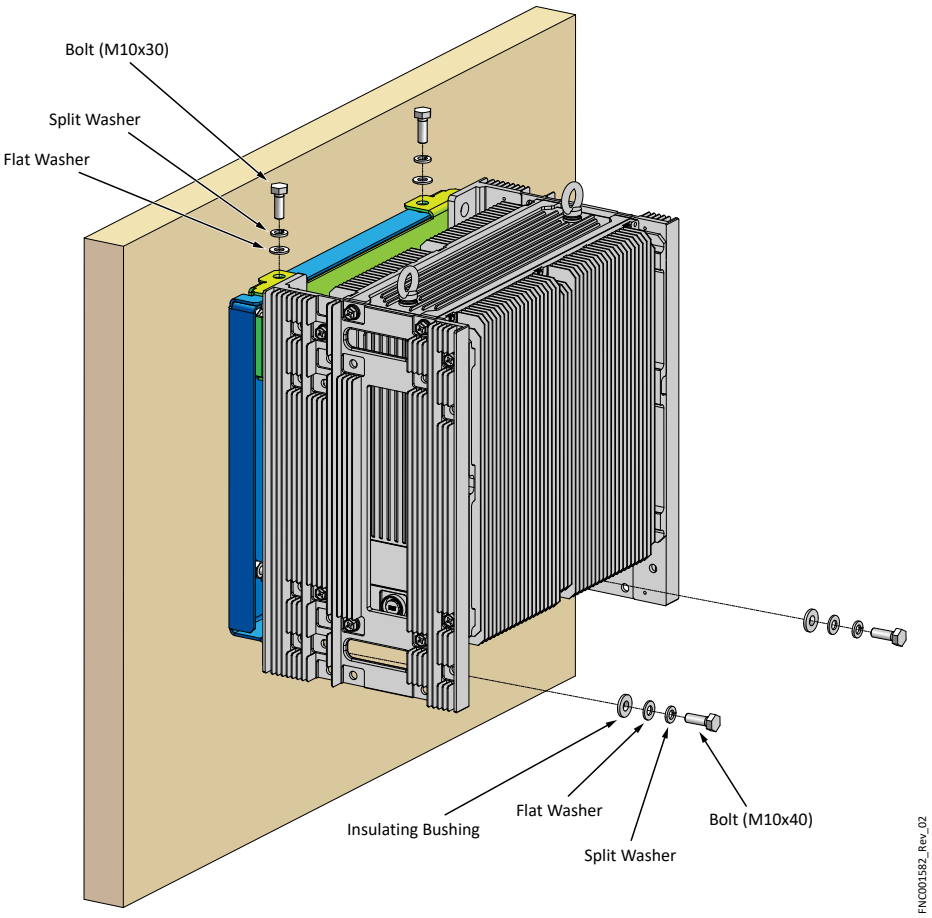

Figure 48
Remove M10 Bolts

Step 4
Unhook the RU from the Wall Mount Plate and place it somewhere safe.

Note: Use the eye bolts to hoist the RU.

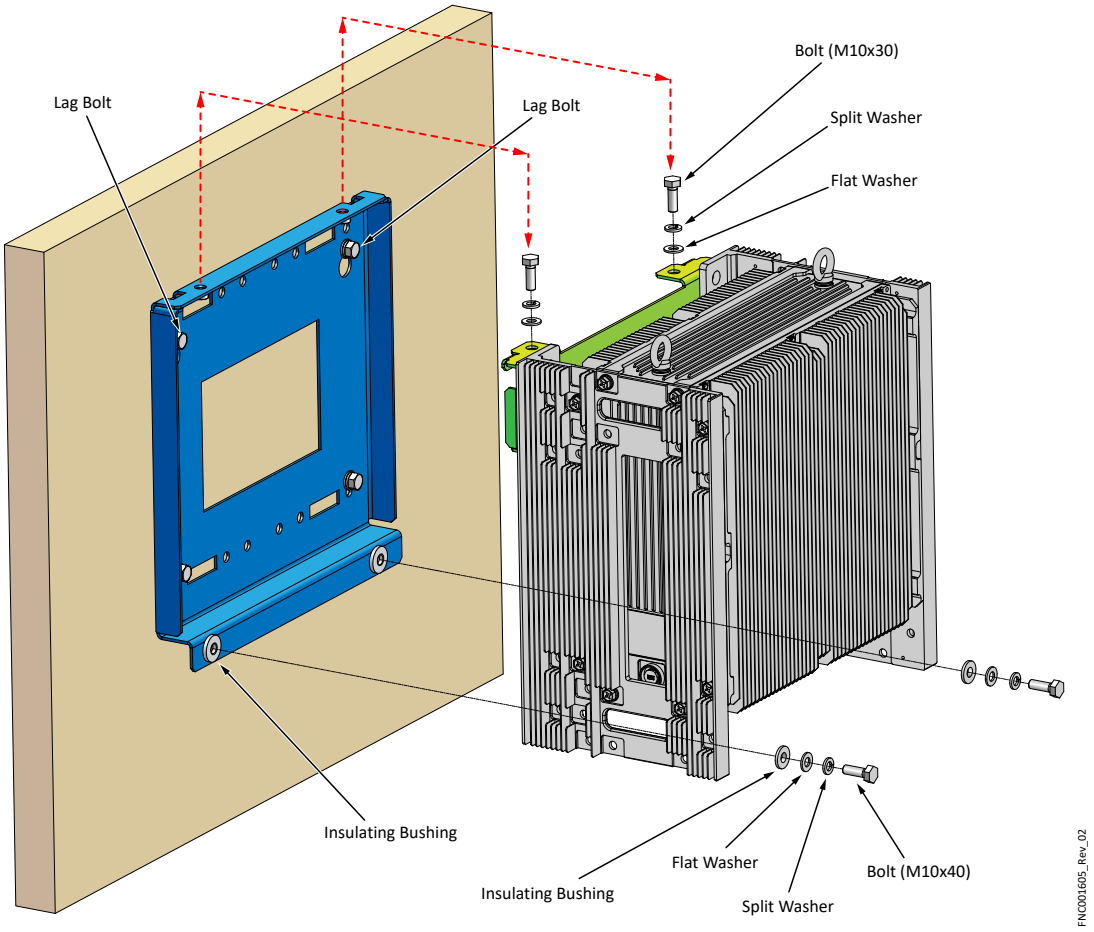

Figure 49
Removing Radio from Wall Mount

Step 5

Mount the replacement RU by aligning the holes on the Wall Mount Plate Adapter with the holes on the top of the Wall Mount Plate and hook it in place.

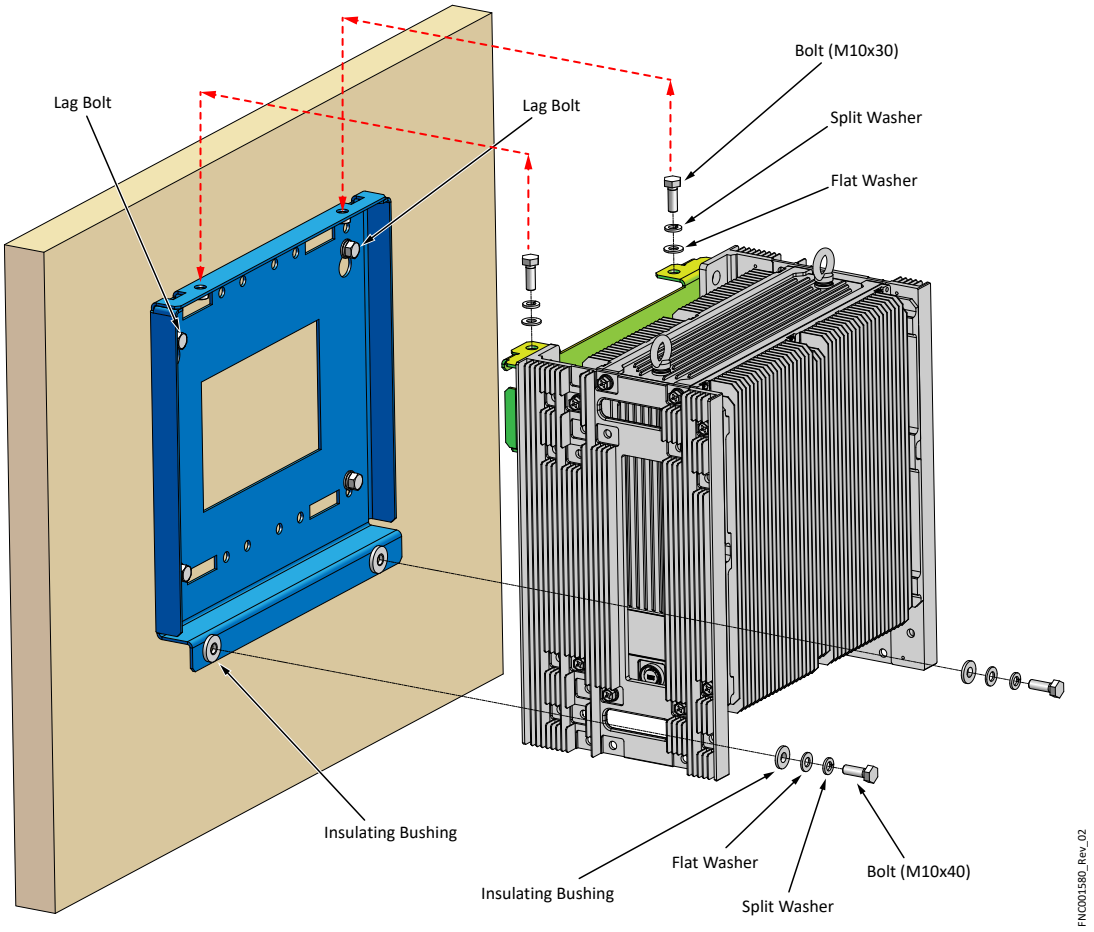

Figure 50
Attaching Radio to Wall Mount Plate

Step 6
Secure the RU in place using M10 bolts by performing the following substeps:

a) Loosely screw two M10 x 30 bolts into the holes on the top of the RU with flat and split washers used for spacing.

b) Loosely screw two M10 x 40 bolts into the holes on the lower front of the RU with an insulating stepped bushing and flat and split washers used for spacing. Ensure the shoulder of the stepped bushing is perfectly fit inside of the hole on the L-bracket for proper alignment.

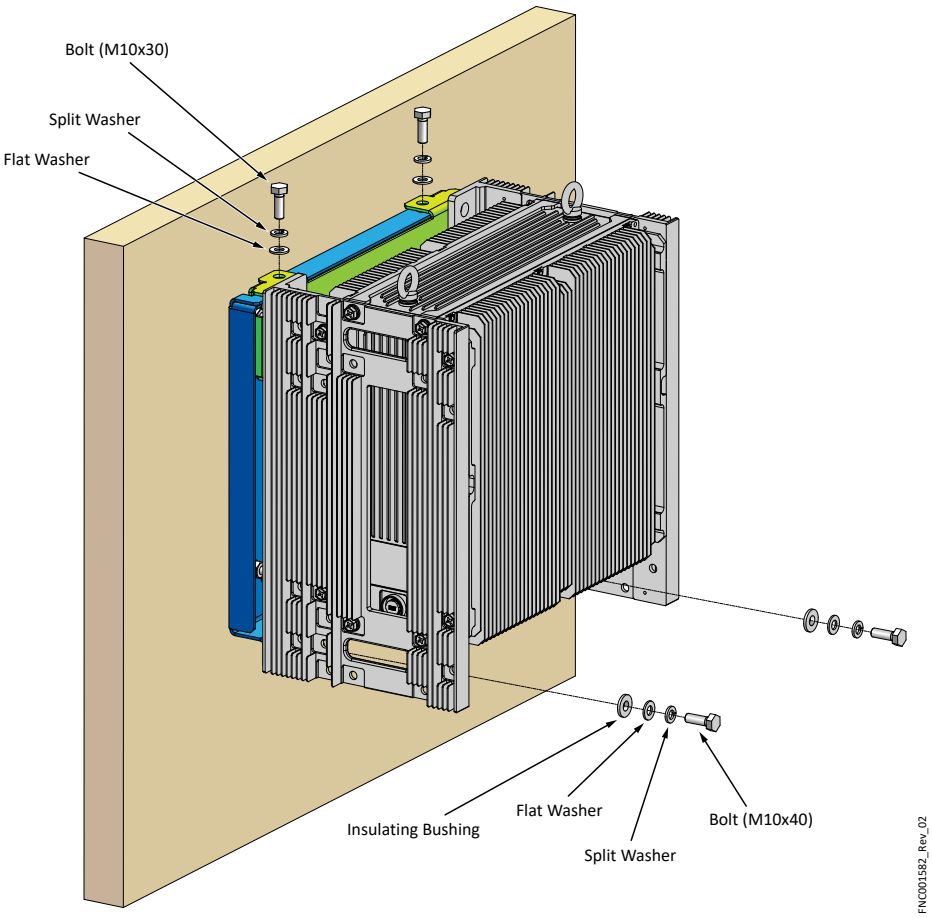

Figure 51
Securing RU to Wall Mount Plate

Step 7
Torque all four M10 bolts to 27 Nm to secure the RU in place.

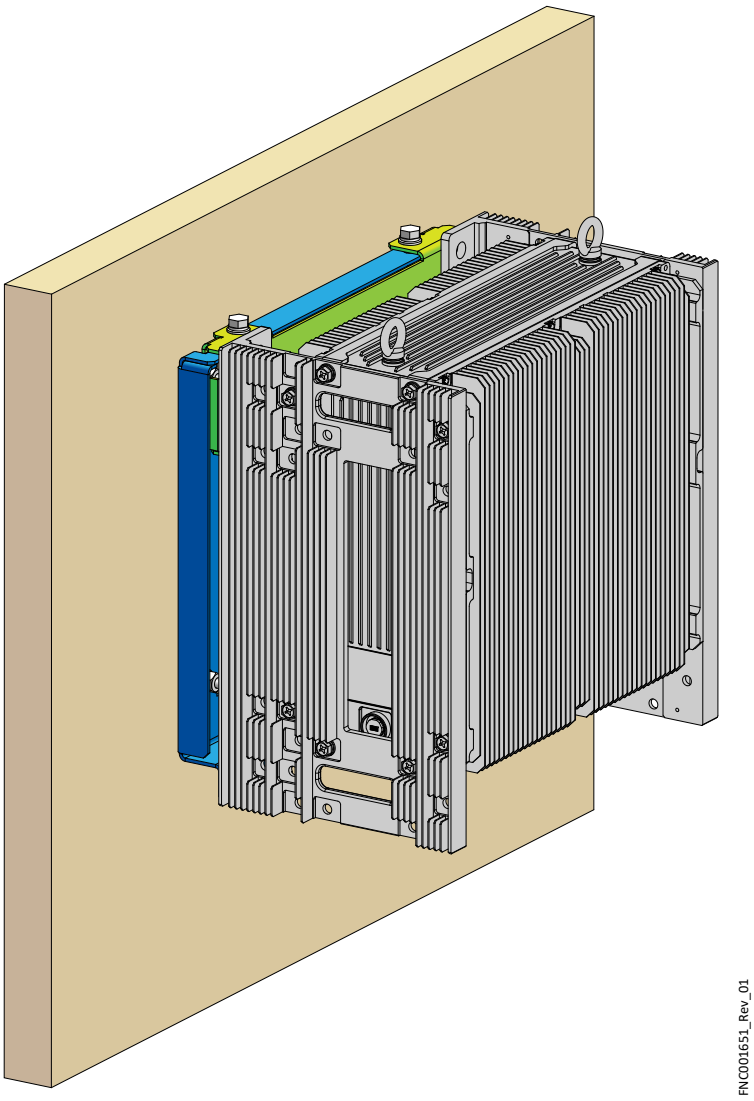

Figure 52
Wall Mount Final Result

✓ **This task is complete.**

7
Removal

In this chapter:

7.1 Cable Removal
7.2 Detach RU From Pole
7.3 Detach RU from Wall
7.4 Detach RU Mounting Adapter Plate
7.5 Remove L-Brackets and Eye Bolts

The following sections describe how to detach a RU from a wall or pole mount and how to remove the power cables.

Caution: Use care when handling the RU, as it is heavy. Fujitsu recommends removing the RU on a two-person team to avoid damage to the unit or injury to the user.

Caution: If the RU is being removed from a high location, Fujitsu recommends using lifting equipment to hoist the RU by a pair of eye bolts mounted on the RU.

Attention: Manipulez le RU avec précaution car il est lourd. Fujitsu recommande d'installer le RU surdeuxéquipe de personnes pour éviter d'endommager l'unité ou de blesser l'utilisateur.

Attention: Si l'EF est retirée d'un emplacement en hauteur, Fujitsu recommande d'utiliser un équipement de levage pour hisser l'EF à l'aide d'une paire de boulons à œil montés sur l'EF.

7.1 Cable Removal

In this section:

7.1.1 Disconnect Power Cable
7.1.2 Remove RF Cables
7.1.3 Remove AISG Cable
7.1.4 Remove Optical Cable
7.1.5 Remove SFP Module
7.1.6 Detach Frame Ground Cable

The following procedures describe how to disconnect cables form the RU.

7.1.1 Disconnect Power Cable

This procedure describes how to remove power from the RU.

Prerequisites:

- V10 Torx screw driver
- Digital Multimeter

Danger: Use properly insulated tools and perform all safety precautions in accordance with local safety practices when working on or around power terminals, power cables, and power connectors. Contacting power terminals, uninsulated conductors, cable wiring, or any connector that could be part of a live electrical circuit can result in death or serious personal injury.

Danger: Utilisez des outils correctement isolés et appliquez toutes les précautions de sécurité conformément à la sécurité locale pratiques lorsque vous travaillez sur ou autour des bornes d'alimentation, des câbles d'alimentation et des connecteurs d'alimentation. Contacter bornes d'alimentation, conducteurs non isolés, câblage de câbles ou tout connecteur pouvant faire partie d'un un circuit électrique peut entraîner la mort ou des blessures graves.

Step 1
Disconnect power at breaker.

Step 2
Locate –48V DC power cable connection on the bottom of the RU.

Step 3
Loosen the connector ring by rotating the connector ring counter-clockwise.

Step 4
Remove the connector from the –48V DC port on the RU.

Step 5
Insert a protective cover into the –48V DC port.

Step 6
Verify that no power is present by measuring voltage on the power cable using a DMM.

✓ **This task is complete.**

7.1.2 Remove RF Cables

This procedure describes how to disconnect the four RF cables from the RU.

Prerequisite:

- RU powered off

Step 1
Remove the weatherproofing from each connector according to local guidelines.

Step 2
Loosen each RF connection between the RU and the antenna.

Step 3
Disconnect the RF cables from the RF port on the RU.

Step 4
Insert protective covers into the RF ports.

Continue with the next task.

7.1.3 Remove AISG Cable

This procedure describes how to remove AISG RET cable from the RU.

Prerequisite:

- RU powered off

Danger: Use properly insulated tools and perform all safety precautions in accordance with local safety practices when working on or around power terminals, power cables, and power connectors. Contacting power terminals, uninsulated conductors, cable wiring, or any connector that could be part of a live electrical circuit can result in death or serious personal injury.

Danger: Utilisez des outils correctement isolés et appliquez toutes les précautions de sécurité conformément à la sécurité locale pratiques lorsque vous travaillez sur ou autour des bornes d'alimentation, des câbles d'alimentation et des connecteurs d'alimentation. Contacter bornes d'alimentation, conducteurs non isolés, câblage de câbles ou tout connecteur pouvant faire partie d'un un circuit électrique peut entraîner la mort ou des blessures graves.

Step 1
On the RU, loosen the cable's outer connector shell. Repeat for the antenna end of the cable.

Note: If replacing the RU, the antenna side of the cable does not have to be removed.

Step 2
Remove the AISG cable from the RET port on the RU.

Step 3
Remove the AISG cable from the antenna side.

Step 4
Insert a protective cover on the AISG port.

✓ **This task is complete.**

7.1.4
Remove Optical Cable

This procedure describes how to remove optical cable from the RU.

Prerequisite:

- RU powered off

Danger: Use properly insulated tools and perform all safety precautions in accordance with local safety practices when working on or around power terminals, power cables, and power connectors. Contacting power terminals, uninsulated conductors, cable wiring, or any connector that could be part of a live electrical circuit can result in death or serious personal injury.

Danger: Utilisez des outils correctement isolés et appliquez toutes les précautions de sécurité conformément à la sécurité locale pratiques lorsque vous travaillez sur ou autour des bornes d'alimentation, des câbles d'alimentation et des connecteurs d'alimentation. Contacter bornes d'alimentation, conducteurs non isolés, câblage de câbles ou tout connecteur pouvant faire partie d'un un circuit électrique peut entraîner la mort ou des blessures graves.

Step 1
Separate the two protective covers.

Step 2
Turn the optic sub-assembly enclosure counter-clockwise and gently pull the connector from the SFP port.

Step 3
Slide the sub-assembly enclosure back to expose the optical fibers.

Step 4
Disconnect the optical fibers from the SFP module.

Step 5
Add protective covers to the optical fibers.

Step 6
Insert protective covers to both mating connectors.

✓ **This task is complete.**

7.1.5 Remove SFP Module

This procedure describes how to remove the SFP module from the RU.

Prerequisite:

- RU powered off

Danger: Use properly insulated tools and perform all safety precautions in accordance with local safety practices when working on or around power terminals, power cables, and power connectors. Contacting power terminals, uninsulated conductors, cable wiring, or any connector that could be part of a live electrical circuit can result in death or serious personal injury.

Danger: Utilisez des outils correctement isolés et appliquez toutes les précautions de sécurité conformément à la sécurité locale pratiques lorsque vous travaillez sur ou autour des bornes d'alimentation, des câbles d'alimentation et des connecteurs d'alimentation. Contacter bornes d'alimentation, conducteurs non isolés, câblage de câbles ou tout connecteur pouvant faire partie d'un un circuit électrique peut entraîner la mort ou des blessures graves.

Step 1
Locate the SFP in the eCPRI port on the RU.

Step 2
Lift the lever on the SFP.

Step 3
Pull the SFP out of the eCPRI port.

Step 4
Apply a protective cover to the eCPRI port.

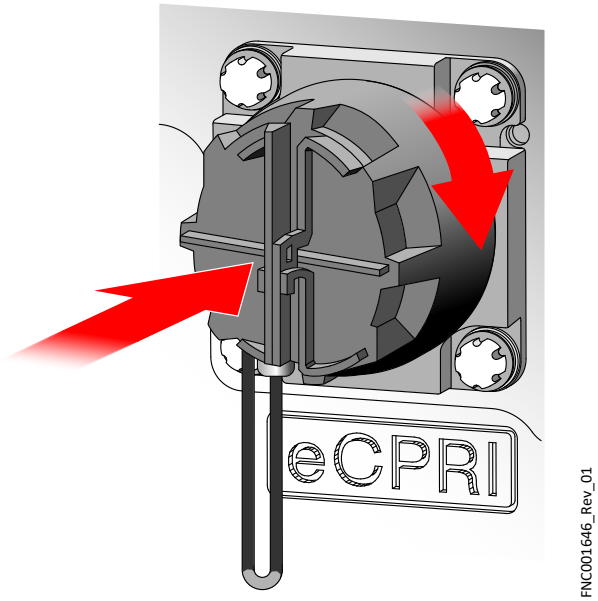

Figure 53
Apply Protective Cover

✓ **This task is complete.**

7.1.6
Detach Frame Ground Cable

This procedure describes how to disconnect a frame ground cable from the RU.

Prerequisites:

- RU not powered up
- Available AWG ground cable (green or green with yellow stripe)
- 13 mm socket
- Philips screwdriver

Danger: Use properly insulated tools and perform all safety precautions in accordance with local safety practices when working on or around power terminals, power cables, and power connectors. Contacting power terminals, uninsulated conductors, cable wiring, or any connector that could be part of a live electrical circuit can result in death or serious personal injury.

Danger: Utilisez des outils correctement isolés et appliquez toutes les précautions de sécurité conformément à la sécurité locale pratiques lorsque vous travaillez sur ou autour des bornes d'alimentation, des câbles d'alimentation et des connecteurs d'alimentation. Contacter bornes d'alimentation, conducteurs non isolés, câblage de câbles ou tout connecteur pouvant faire partie d'un un circuit électrique peut entraîner la mort ou des blessures graves.

Step 1
On the RU, locate the FG cable to be removed.

Step 2
Unscrew the RU end of the FG cable and remove.

Step 3
Using a screwdriver or 13 mm socket, detach screws from the ground point.

✓ **This task is complete.**

7.2
Detach RU From Pole

This procedure describes how to remove a RU from a pole mount.

Prerequisites:

- Loctite LB 8012 or equivalent lubricant applied to bolts
- 1/2, 7/16, and 11/16 sockets
- 5/8 in. wrench
- Torque wrench
- Philips screw driver
- Power tools (optional)
- Metric and SAE toolkit

Caution: All power and cabling must be disconnected from the RU before starting this procedure.

Caution: The RU is heavy. Fujitsu recommends removing the RU on a two-person team to avoid damage to the unit or injury to the user.

Attention: Toute l'alimentation et le câblage doivent être déconnectés de l'EF avant de commencer cette procédure.

Attention: Le RU est lourd. Fujitsu recommande de retirer l'EF d'une équipe de deux personnes pour éviter d'endommager l'appareil ou des blessures à l'utilisateur.

Step 1
If necessary, attach hoisting equipment to eye bolts on top of the RU.

Step 2
Remove the M10 x 40 bolts from the bottom of the mounting plate.

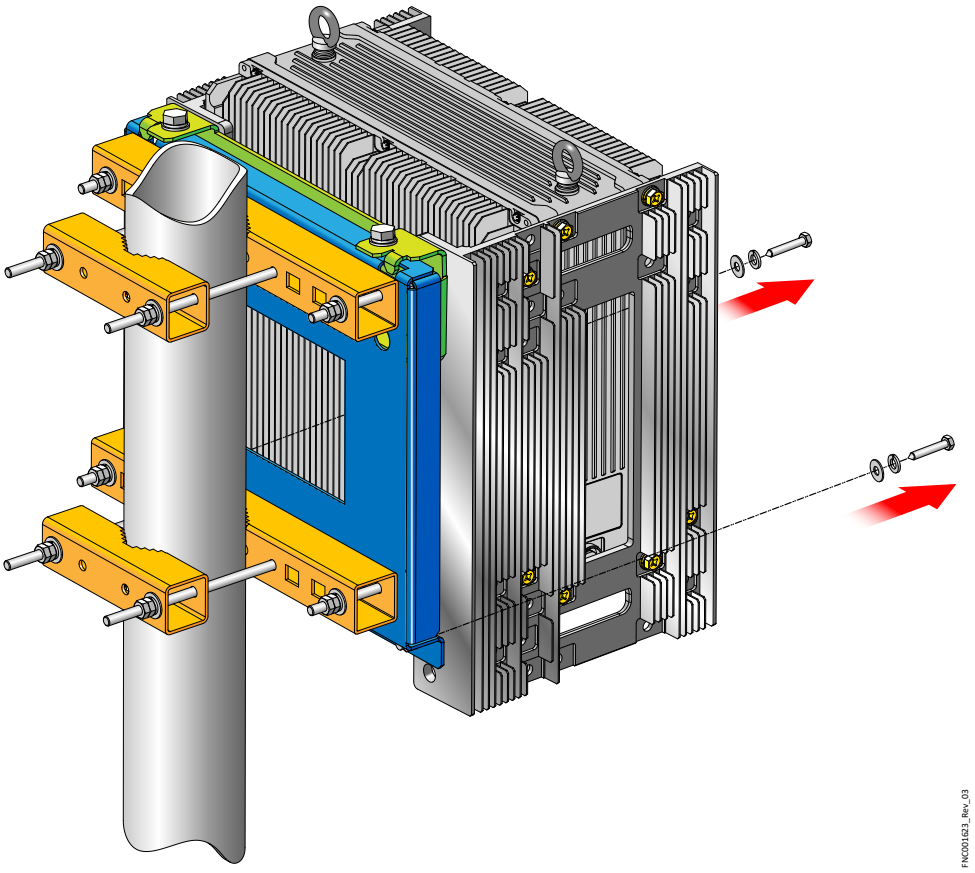

Figure 54
Remove Bottom L-Bracket Bolts

Step 3
Remove the M10 x 30 mm bolts from the top of the mounting plate.

Step 4
Cautiously lift the RU from the mounting plate and lower to the ground using the eye bolts per local guidelines.

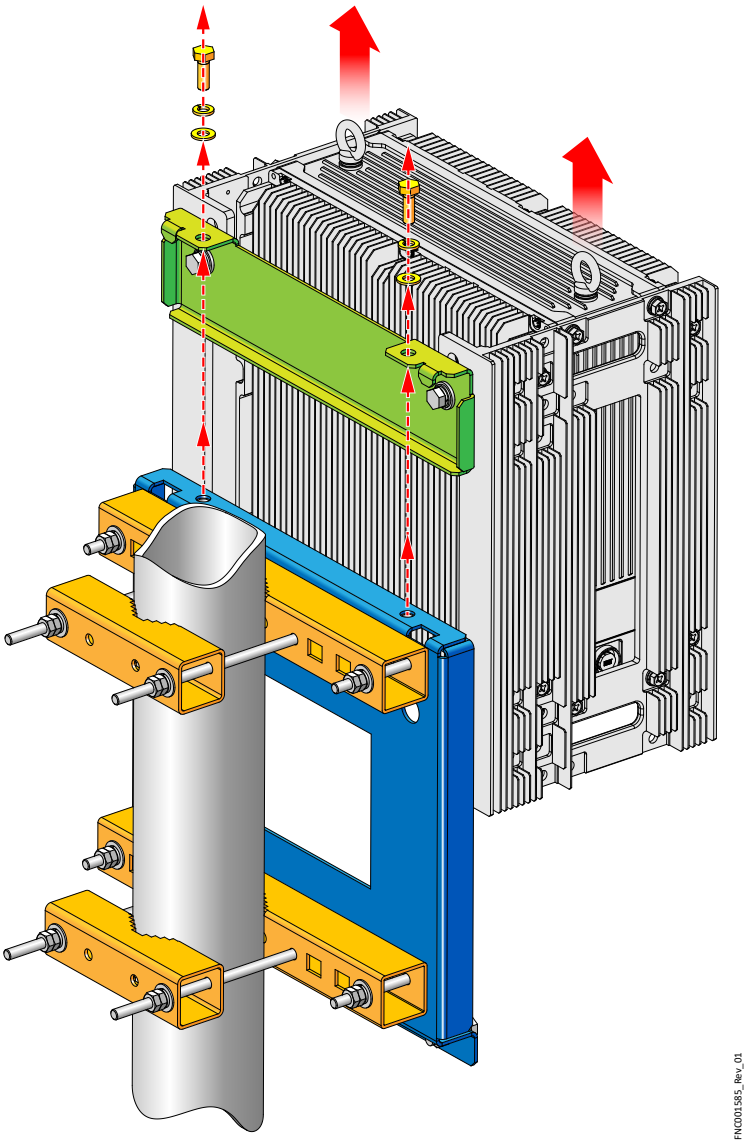

Figure 55
Remove RU from Pole Mount

Step 5
Remove the jam nuts from each of the four 10-inch 3/8 bolts holding the small and large crossmembers together.

Step 6
Disconnect the small crossmembers from the large crossmembers by removing the 10-inch 3/8 bolts.

Note: Fujitsu recommends removing the pole mount plate on a 2-person team to prevent injury or damage to the equipment.

✓ **This task is complete.**

7.3
Detach RU from Wall

This procedure describes how to remove the RU from the wall and Wall Mounting Bracket.

Prerequisites:

- Loctite LB 8012 or equivalent lubricant applied to all bolts
- 17 mm socket
- 5/8 in. wrench
- Philips screw driver
- Power tools (optional)
- Metric and SAE toolkit

Caution: All power and cabling to the RU must be disconnected from the RU before starting this procedure.

Caution: The RU is heavy. Fujitsu recommends removing the RU on a two-person team to avoid damage to the unit or injury to the user.

Attention: Toute l'alimentation et le câblage doivent être déconnectés de l'EF avant de commencer cette procédure.

Attention: Le RU est lourd. Fujitsu recommande de retirer l'EF d'une équipe de deux personnes pour éviter d'endommager l'appareil ou des blessures à l'utilisateur.

Note: Attach a hoist to the eye bolts to support the RU during removal.

Step 1
Remove the two M10 x 40 bolts and washers from the front bottom of the RU.

Step 2
Remove the two M10 x 30 bolts and washers from the top of the RU.

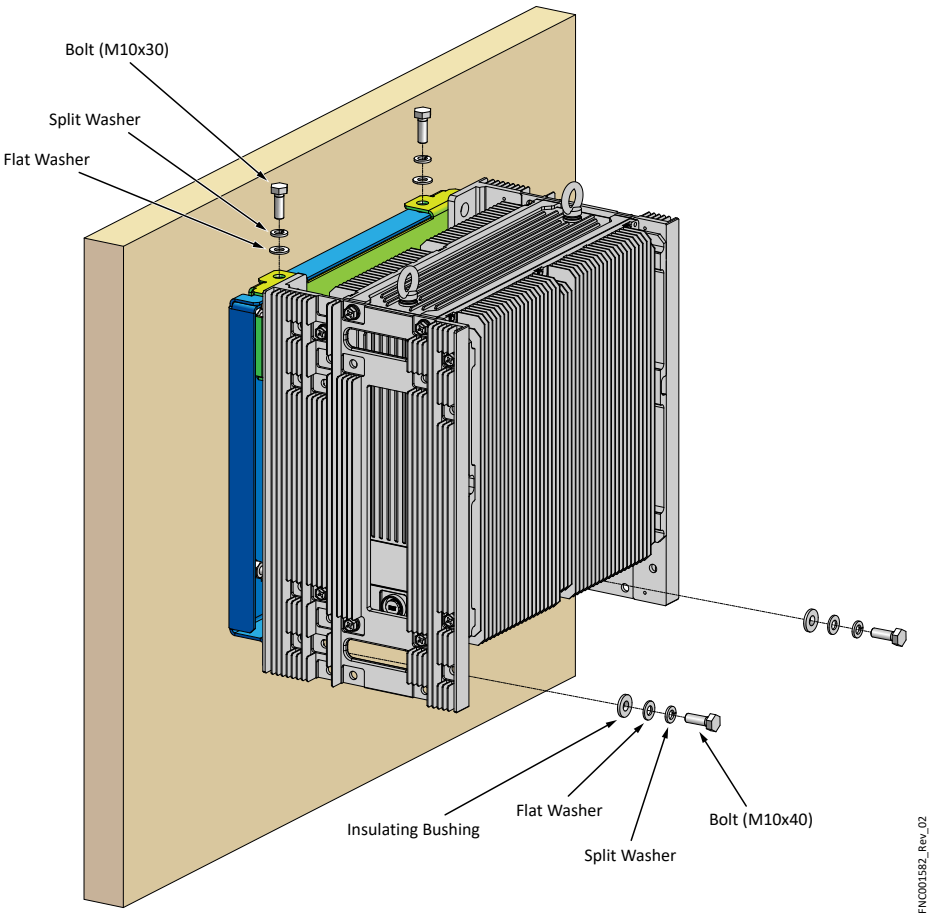

Figure 56
Remove M10 Bolts

Step 3
Unhook the RU from the Wall Mount Plate and place it somewhere safe.

Note: Use the eye bolts to hoist the RU.

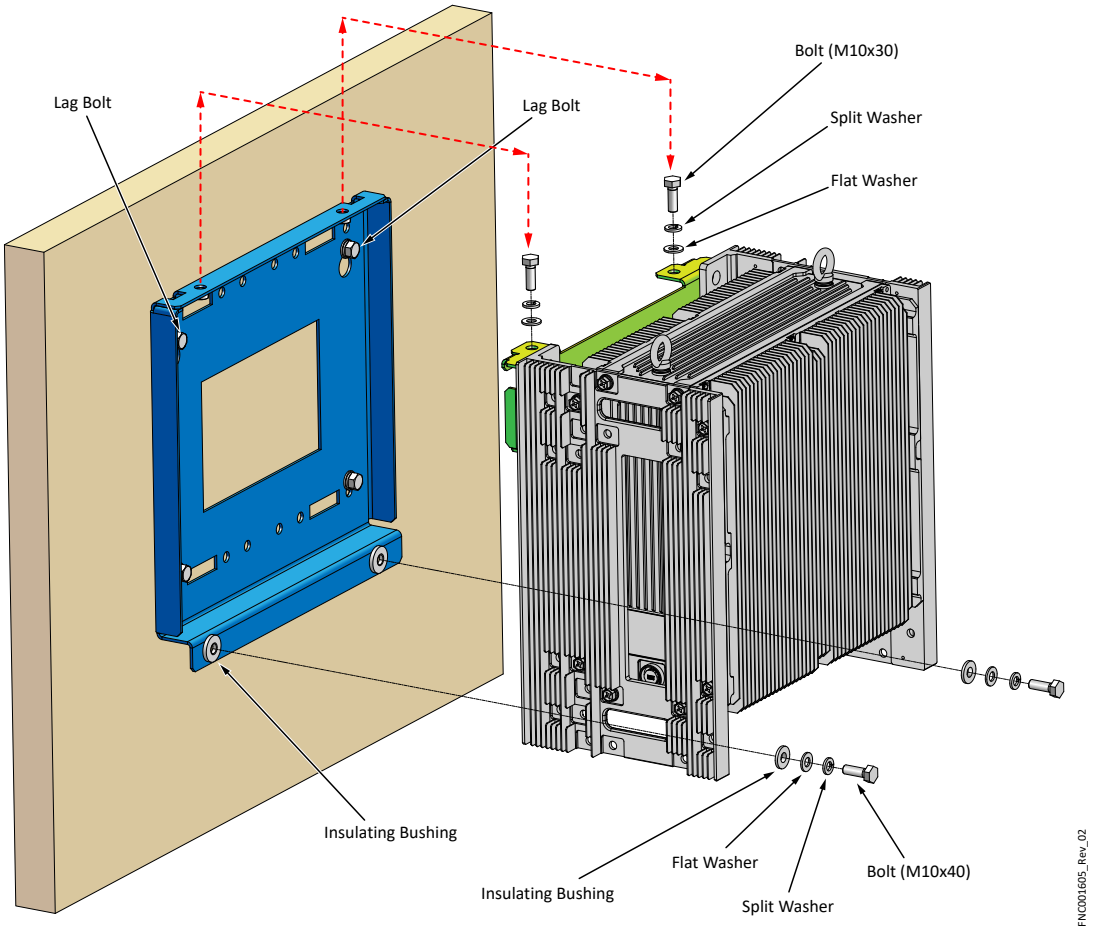

Figure 57
Removing Radio from Wall Mount

Step 4

Remove the RU Wall Mount Plate from the wall by unscrewing all four nuts on the M10 bolts in the wall.

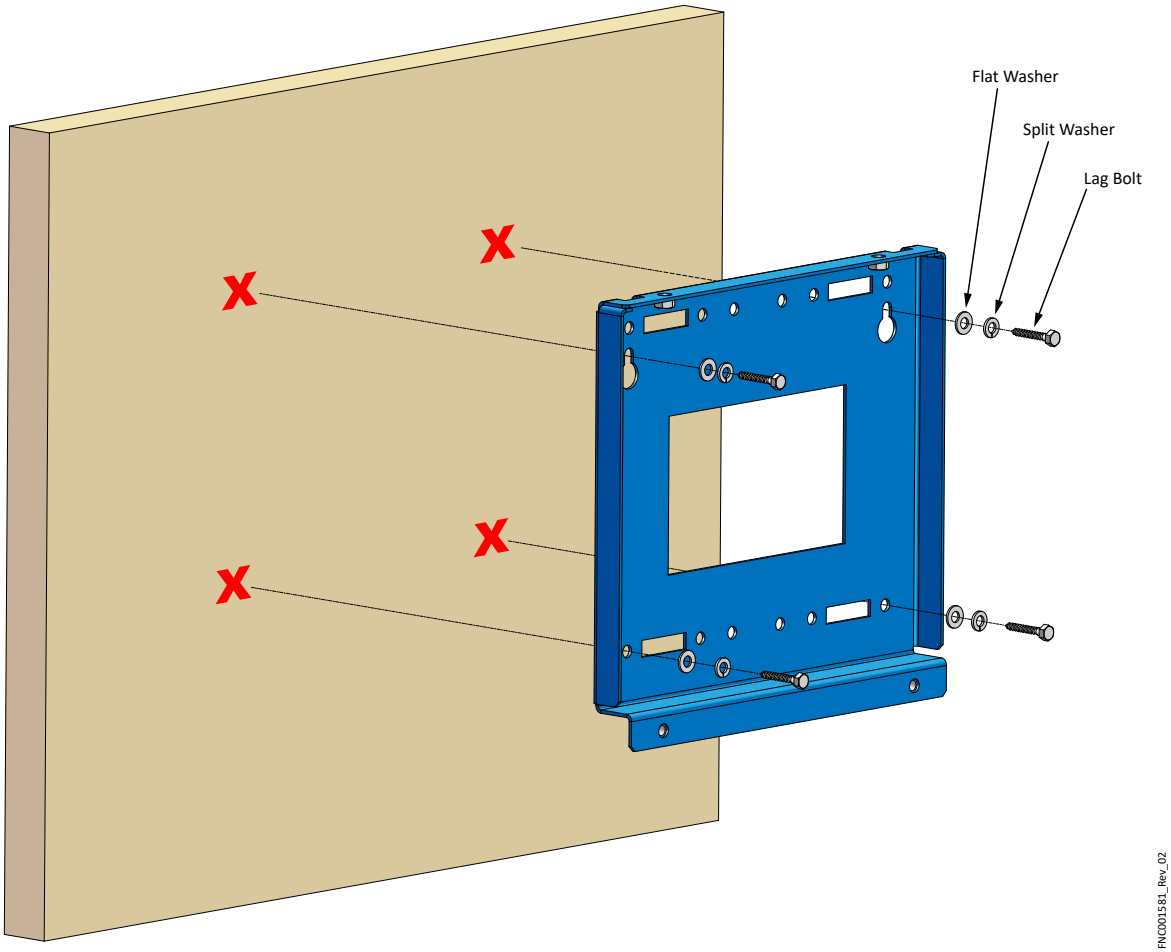

Figure 58
Removing Wall Mount Plate from Wall

Step 5
Remove the Wall Mount Plate and the M10 bolts from the wall.

✓ **This task is complete.**

7.4
Detach RU Mounting Adapter Plate

This procedure describes how to detach the mounting adapter plate from the RU.

Prerequisites:

- Loctite LB 8012 or equivalent lubricant applied to all bolts
- 17 mm socket
- 5/8 in. wrench
- Power tools (optional)
- Metric and SAE toolkit

Step 1
Unscrew the two M10 x 30 bolts from the front of the mounting adapter plate.

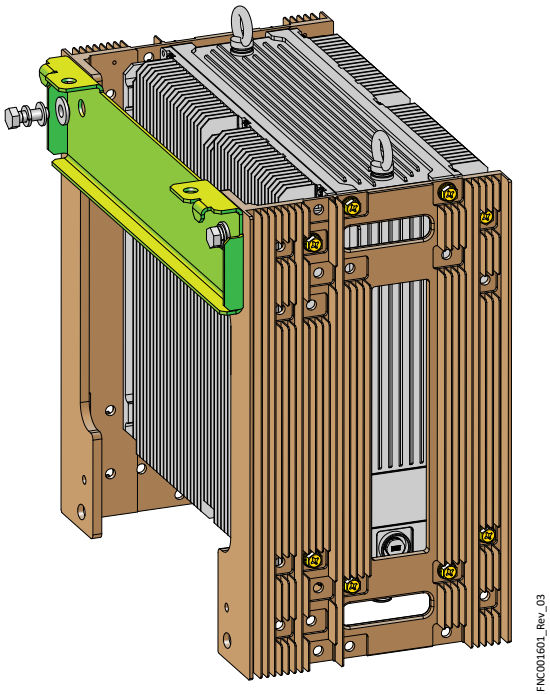

Figure 59
Removing Bolts from Mounting Adapter Plate

Step 2
Remove the flat and split washers, insulating bushings, and mounting plate from the RU.

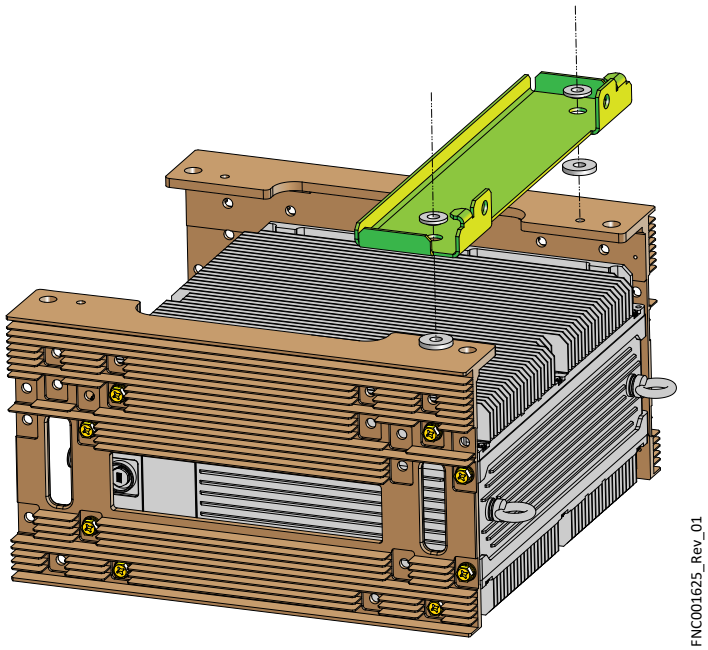

Figure 60
Removing Mounting Adapter Plate

Continue with the next task.

7.5
Remove L-Brackets and Eye Bolts

This procedure describes how to remove the L-brackets and eye bolts from the RU.

Recommended Tools:

- 13 mm socket
- 5/8 in. wrench
- Power tools (optional)
- Metric and SAE toolkit

Step 1
Unscrew the two M8 eye bolts from the two holes on top of the RU and collect the washers.

Step 2
Unscrew the eight M8 screws on the L-brackets on each side of the RU.

Step 3
Remove the L-brackets from each side of the RU.

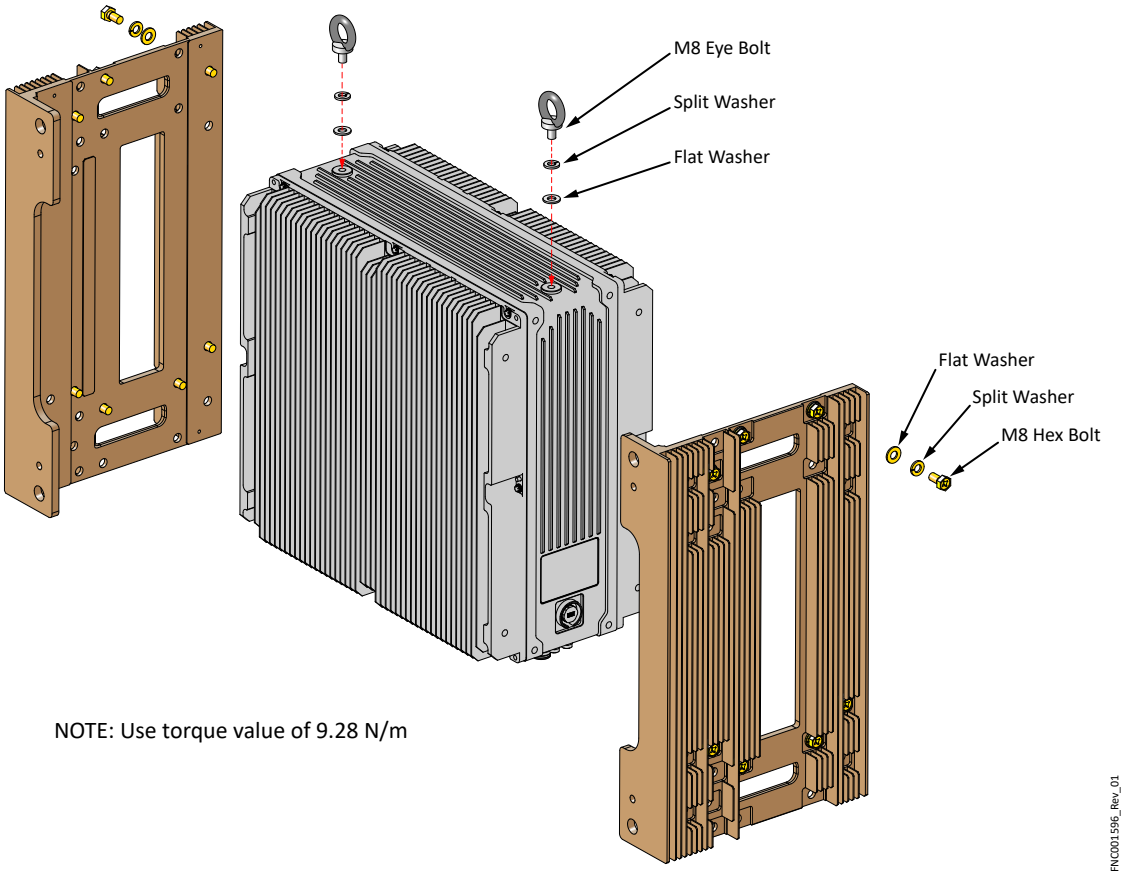

Figure 61
Removing L-Brackets and Eye Bolts

✓ **This task is complete.**

A
References

- 3GPP TS.38.104 NR Base Station (BS) radio transmission and reception v16.3.0 (2020-03)
- 3GPP TS.38.141 NR Base Station (BS) conformance testing Part 1: Conducted conformance testing v16.3.0 (2020-03)
- Antenna Interface Standards Group Standard No. AISG v2.0 (2006-6-13)
- ORAN 7.2x Spec: Control, User, and Synchronization Plane Technical Specification of ORAN version: ORAN-WG4.CUS.0-v02.00
- ORAN 7.2x Spec: Management Plane Technical Specification of ORAN version: ORAN-WG4.MP.0-v02.00
- ORAN-WG4.IOT.0-v01.00.
- Telecom Slave Clock (T-TSC) to G8275.1 and Assisted Partial Timing Support.
- IEEE 1588
- IEEE 1914.1
- ITU-T G.826x (SyncE), G.827x series
- GR-63 (NEBS Requirements: Physical Protection)
- GR-487 (Salt fog)
- IEC/UL62368-1 2nd edition (Product safety)
- UL 50E (UL60950-22) CSA-C22.2 (Outdoor specification)
- 3GPP 38.113 NR Base Station (BS) Electromagnetic Compatibility (EMC) v15.9.0 (2020-03)
- ETSI EN 300 019-2-4, Severity class 1 (Vibration)
- ETSI EN300 019-1-1 Class 1.3 (Storage)
- IEC-61000-4-5 (Surge Protection)

- FCC requirements:
  - Radio frequency radiation exposure limits: CFR 47, Part 1.130
  - Unintentional radiation: CFR 47, Part 15B
  - Radio frequency radiation exposure limits: CFR 47, Part 1.1310
  - Frequency Allocation and Radio Treaty Matters: CFR 47, Part 2
  - Unintentional radiation: CFR 47, Part 15
  - Misc Communication Services: CFR 47, Part 27
  - Private Land Mobile Radio Services: CFR 47, Part 90
  - FCC rules on output power as outlined in part 90 (90.617, 90.691) and part 27 (27.53).
- 3GPP TS.25.461 NR Iuant interface: Layer1 v6.5.0 (2005-12)

B
ZTP Overview

Zero Touch Provisioning (ZTP) allows remote configuration of a device, with little to no pre-defined information in the Radio Unit (RU).

The following figures outline the ZTP sequence.

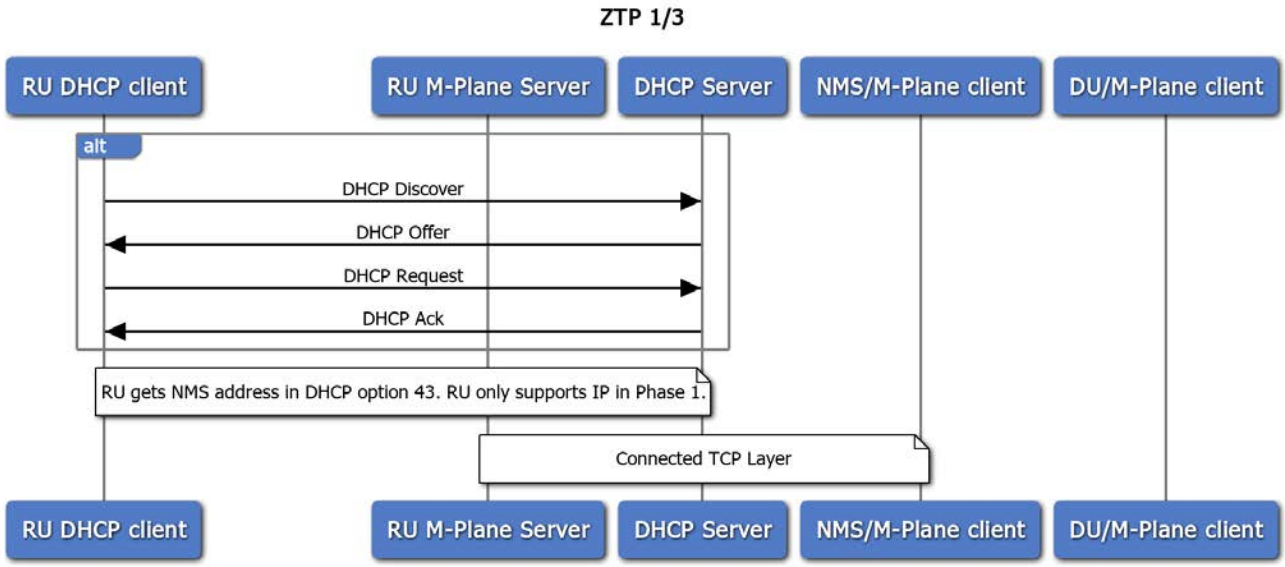

Figure 62
Acquiring IP Address

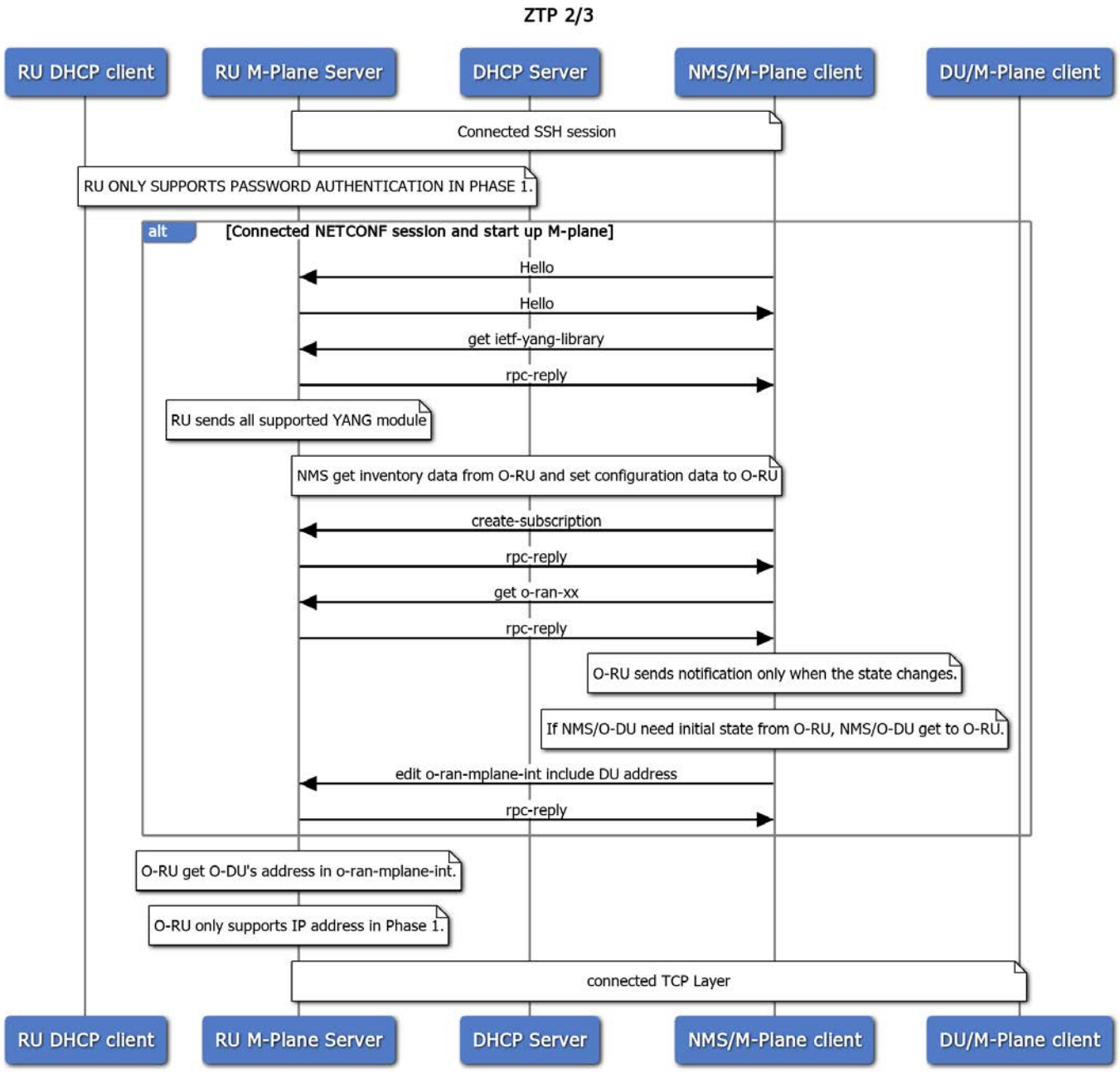

Figure 63
Configuration Files are Requested and Sent

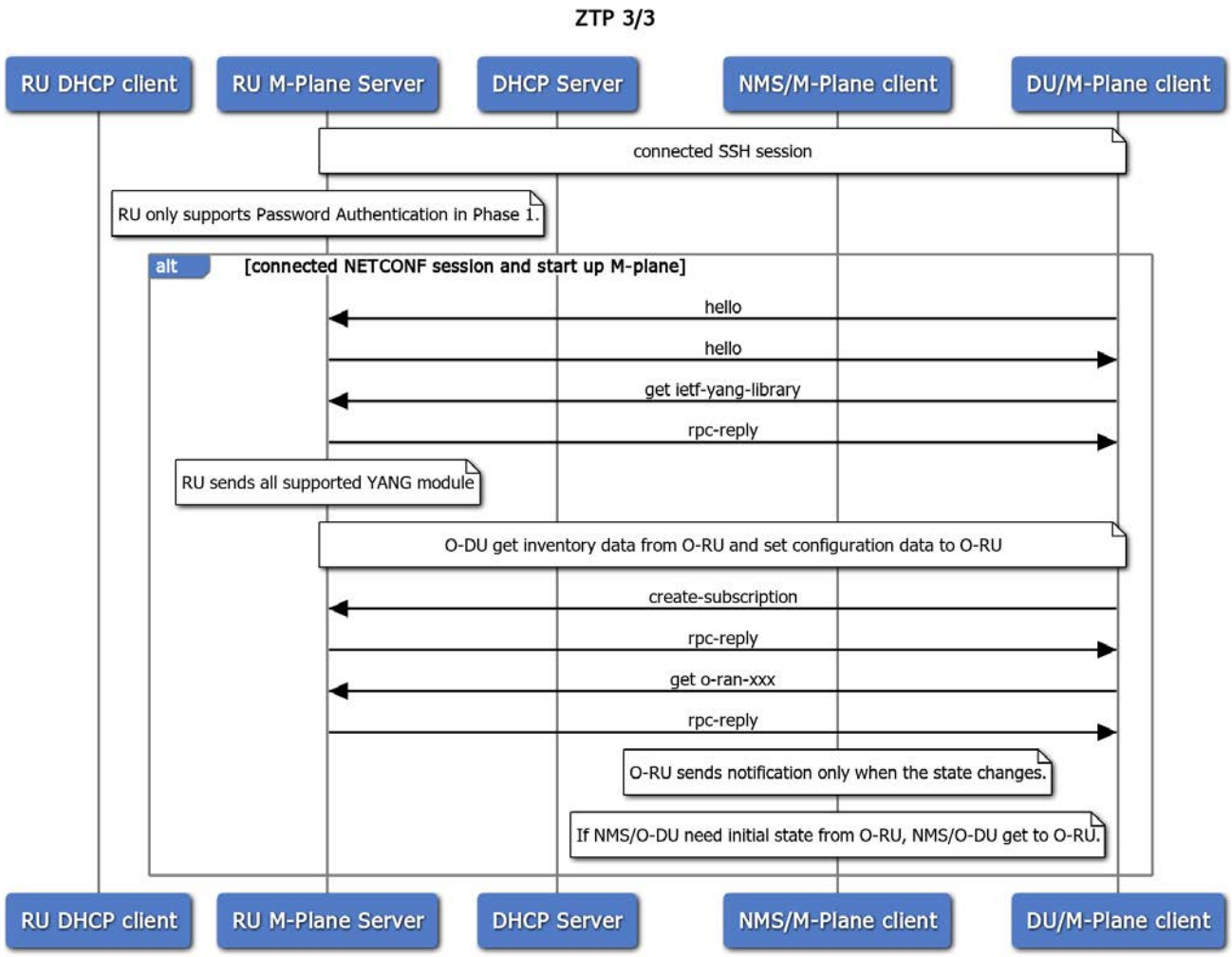

Figure 64
Configuration Files Loaded and RU Becomes Operational

C
Optical Connector Cleaning

In this appendix:

C.1 LC End Surface Cleaning
C.2 End Surface Cleaning In LC

Danger: Never look into the end of a fiber-optic cable. Permanent eye damage or blindness can occur very quickly if the laser light is present. Follow local safety precautions regarding fiber.

Danger: Never handle exposed fiber with bare hands or touch it to base skin. Fiber fragments can enter the skin and are difficult to detect and remove.

Caution: Clean the optical connector before inserting and after removal.

Danger: Ne regardez jamais dans l'extrémité d'un câble à fibre optique. Des lésions oculaires permanentes ou la cécité peuvent survenir très rapidement si la lumière laser est présente. Suivez les précautions de sécurité locales concernant la fibre.

Danger: Ne manipulez jamais la fibre exposée à mains nues et ne la touchez jamais à la peau de base. Des fragments de fibre peuvent entrer la peau et sont difficiles à détecter et à éliminer.

Attention: Nettoyez le connecteur optique avant de l'insérer et après son retrait.

The RU has one optical interface used for the eCPRI port with an installed SFP module. Refer to LC End Surface Cleaning and End Surface Cleaning In LC for information on cleaning the optical connector end surface.

Reel-type cleaners can be used for LC connector ferrule end surface cleaning.

Important: Follow local safety precautions and guidelines regarding fiber optical connector cleaning.

Figure 65
Reel-type Cleaner Tool (Closed)

Figure 66
Reel-type Cleaner Tool (Opened)

Figure 67
Stick Cleaner Tool

C.1
LC End Surface Cleaning

This procedure describes how to clean the Lucent Connector (LC) end surface.

Prerequisite:

- Reel-type cleaner

Step 1
Remove the protection cap from the connector.

Step 2
Hold the connector vertically against the cleaner and rub in the direction of the arrow on the cleaning side of the cleaner for 1-2 seconds to prevent wrinkles.

Important: Do not use the same area on the cleaner a second time. If more cleaning is needed, use a different area on the cleaner or a new cleaner.

Caution: Do not rotate the connector while cleaning.

Attention: Ne faites pas tourner le connecteur pendant le nettoyage.

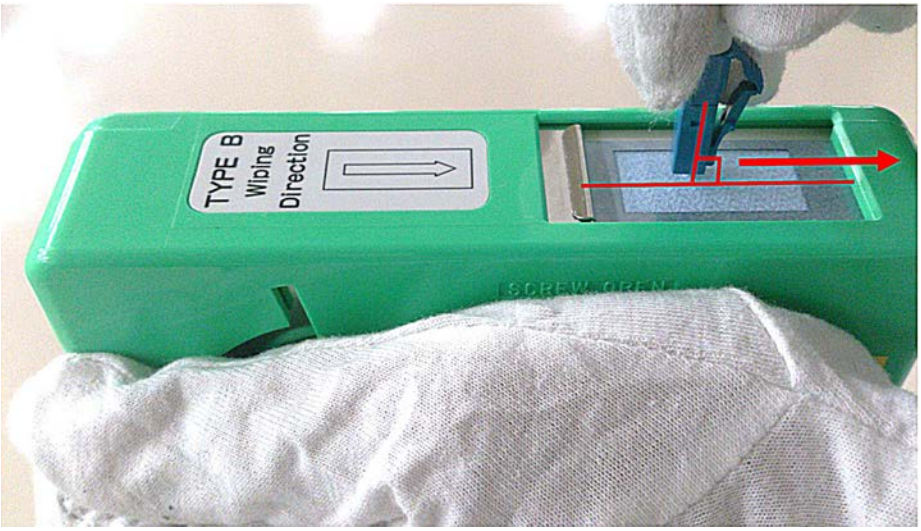

Figure 68
Cleaning Method

Step 3
After cleaning, promptly install in the connector or replace protection cap and store it.

Note: Install or store the connector within 15 minutes of cleaning to prevent unnecessary dirt from entering the connector.

Caution: Do not touch the end surfaces.

Attention: Ne touchez pas les surfaces d'extrémité.

✓ **This task is complete.**

Additional Instructions:

- Clean again if the connector end surface is touched after the cleaning.
- Do not use the same part of the cleaner more than once.
- Do not wipe the boots of the connector for open circuit prevention.
- Do not touch the ferrule part of the connector to the polyethylene cleaner guide.
- Do not use a cleaner except to clean the ferrule.

C.2
End Surface Cleaning In LC

This procedure describes how to clean the end surface in the LC.

Prerequisite:

- Stick-type cleaner

Caution: Do not touch surface after cleaning. Scars form easily on the connector's surface.

Caution: Do not use a cleaner except to clean the ferrule.

Attention: Ne touchez pas la surface après le nettoyage. Les cicatrices se forment facilement sur la surface du connecteur.

Attention: N'utilisez pas de nettoyant sauf pour nettoyer la virole.

Step 1
Remove the connector protection cap.

Step 2
Insert the point of the cleaner straight into the ferrule side of the connector.

Note: It is not necessary to come in contact with the connector edges.

Step 3
Circle the ferrule seven times with the cleaner.

Step 4
After cleaning, promptly install in the connector or replace protection cap to protect from dust or debris.

✓ **This task is complete.**

Additional Instructions:

- Clean again if the connector end surface is touched after the cleaning.
- Do not use the same stick-type cleaner more than once.
- Do not use a cleaner except to clean the ferrule.

D
Weatherproofing RU Connections

Various methods of weatherproofing are available depending on brand availability and local practices.

Some of these methods are:

- Vinyl tape and butyl rubber tape/sheet
- Self-fusing tape
- Cold shrink tubing
- Heat shrink tubing
- Rubber boots
- Clamshell covers

Fujitsu recommends using industry standard UL approved self-fusing tape, but users may use any UL approved weatherproofing material.

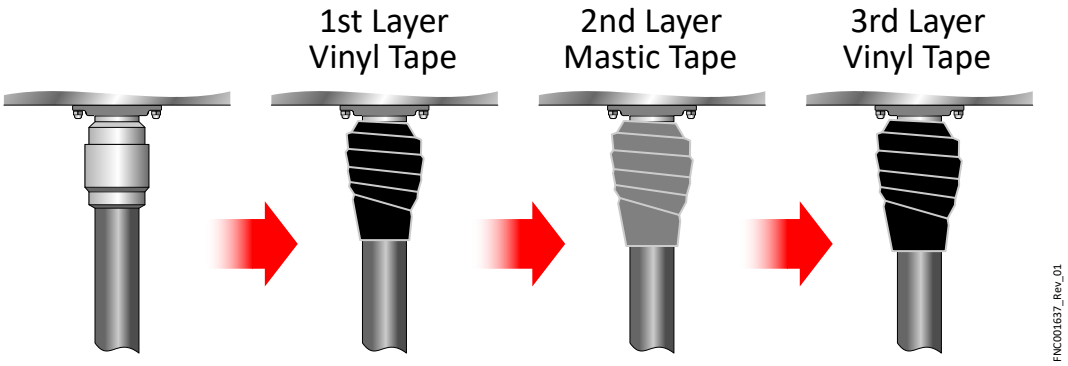

Figure 69
Weatherproofing Methods

E
Glossary

This chapter describes the product glossary terms and definitions.

3GPP	3rd Generation Partnership Project
4T4R	Four Transmit and Four Receive (mode for base stations with four transmit and four receive antennas that can transmit and receive signals simultaneously)
5G-NR	5th Generation New Radio
ACLR	Adjacent Channel Leakage Power Ratio
AISG	Antenna Interface Standards Group
ALD	Antenna Line Device
Base Station	Base Station
BW	Bandwidth
CEC	Code Electrique Canadian
CFR	Crest Factor Reduction, Code of Federal Regulations
D	Depth
DC	Direct Current
DDC	Digital Down Conversion
DL/UL	Download/Upload
DPD	Digital Pre-Distortion
DU	Distributed Unit
eCPRI	Enhanced Common Public Radio Interface
EMC	Electromagnetic Compatibility
EMS	Element Management System
EVM	Error Vector Magnitude
FDD	Frequency Division Duplex
FG	Frame Ground
FTAC	Fujitsu Technical Assistance Center

GENTS	General Terms and Conditions of Sale
GPS	Global Positioning System
H	Height
IP65	Enclosure Ingress Protection Code 65 (where the first digit is solid particle protection 6, which equals *dust-tight*) and the second digit is liquid ingress protection 5, which equals *water jets*)
LLS	Lower Layer Split
LNA	Low Noise Amplifier
LTE	Long Term Evolution
MIMO	Multiple-Input and Multiple-Output
MTBF	Mean Time Between Failures
NEC	National Electrical Code
NRTL	Nationally Recognized Testing Laboratory
OBW	Occupied Bandwidth
ORAN	Open Radio Access Network
PA	Power Amplifier
PE	Protective Earth
PIU	Plug-In Unit
PS	Power Supply
PTP	Point-To-Point, Precision Time Protocol
RET	Remote Electrical Tilt
RF	Radio Frequency
RMA	Return Material Authorization
RTWP	Received Total Wideband Power
RU	Radio Unit
SCS	Sub Carrier Spacing
SELV	Safety Extra Low Voltage
SFP	Small Form-Factor Pluggable
SW	Software
TRX	Transceiver
T-TSC	Telecom Time Slave Clock
UIR	Unit Investigation Request
UL	Underwriters Laboratories

VSWR	Voltage Standing Wave Ratio
W	Width
WEEE	Waste Electrical and Electronic Equipment

Index

A

ACLR 66
adjacent channel leakage power ratio 66
adjacent channel selectivity 74
air pressure 23
alarm detection 136
alarm reporting 20
alarms 20
ANT configuration 20
antenna configuration 20, 29
antenna port 55
Attach RU Mounting Bracket 96, 97, 105, 121, 129

B

bandwidth
  channel 65
  instantaneous 65
bit rate 20
  line 63
block diagram 53
Blocking Performance Requirement 74

C

Cable Installation 112
CACLR 66
carrier configuration 20, 31, 65
channel bandwidth 65
channel frequency 136
Check LED Status 130
chemically active substances 23
clock
  recovery 63, 64
cold start 23, 61, 136
Commissioning RU 126
common mode
  fast transients 26
  RF 27
Complete RU Installation 133
conducted emission 25
Confirmation Before Commissioning 128, 152
Connect RU Cables 112, 114, 155
Connection With DU 16
controls 20
Counter 64
cumulative adjacent channel leakage power ratio 66

D

DC power 56, 79
DC Power and Ground Ports 56
DC Power Port 27
DC Power Specification 79
debug port 58
default parameters 28
Description of Function Block 53
dimensions 20
discharge
  electric 26
drain voltage control 61
dynamic range 66, 74

E

eCPRI 63
electric discharge 26
electrical specifications 79
EMC 25
emission
  conducted 25
  radiated 25
environmental conditions 136
equipment
  repairing and returning 94
Error Vector Magnitude (EVM) 66
Example 96, 97, 105, 121, 129
External Interface 55

F

fast transient 26
Fast Transients Common Mode 26
FCC Out-of-Band Emission Specification 66
features 16
frequency band 20
frequency error 66
front-haul port 136
FRR 20

G

General Blocking 74

General Specification 65
ground ports 56

H

humidity 23

I

immunity
  performance criteria 25
  radiated 26
  specification 25
  test standard 25
Immunity Performance 25
Immunity Specification 25
in-band blocking 74
in-channel selectivity 74
installation 84
Installation Precautions 92
Installation Tools 95
instantaneous bandwidth 65
interface 20, 58
intermodulation
  receiver 74
  transmitter 66
internal clock 136
IP 20

L

Layout Image of Antenna Ports 29
LED Display 131
lightning 27
line bit rate 63
List of Alarms (Customer Requirements) 136
local access 136

M

maintenance interface 58
Maintenance Window 58
maximum output power 66
modulation quality 66
module
  optical 64
mounting 86
MTBF 20

N

Narrowband Blocking 74
Narrowband Intermodulation 74
noise 20

O

O&M 135
occupied bandwidth 66
operating band 65, 66, 74
operating band unwanted emissions 66
operating temperature 20
Operational Specifications 23
optical module 64
optical port 55
ORAN 20
out-of-band blocking 74
Overview 16

P

parameters 28
Performance Requirement 63
port
  debug 58
  ground 56
  optical 55
  power 25
  RET 25
  RET (AISG) 57
  RF antenna 55
  test 58
power
  DC 56
power accuracy 66
Power Connection 56
power consumption 20
Power Control Dynamic Range 66
power port 25
Power Supply 78
Power Up 120, 123, 140, 144, 151, 157, 160, 164, 166
Prepare RU for Installation 154
Product Safety Specification 24
PTP 136

R

radiated
  immunity 26
radiated emission 25
radiated immunity 26
radio performance 65
radio specifications 64
receiver intermodulation 74
receiver specification 74
recovery clock 63, 64
reference sensitivity (NF) 74
repairing defective equipment 94
Resistibility of Lightning 27
RET (AISG) port 57
RET Interface Connector Pin Assign 57
RET port 25

RET Port 27
returning equipment 94
RF 27, 55
RF antenna port 55
RF Common Mode 27
RF Confirmation 134
RF Port 27
RU Alarm and Warning Detection 136
RU Block Diagram 53
RU Configuration 19
RU Default Parameters Guidelines 28
RU External Interfaces 19
RU Front View 16
RU Hardware Feature 18
RU Installation Procedure 95
RU LED 131
RU Specifications 20
RU Status by LED Combination 58
RX frequency interval 65

S

safety specifications 24
Selecting Recovery Clock 63
SFP 64
shutdown 136
specifications 20
  basic 24
  DC power 79
  electrical 79
  outdoor 24
  product safety 24
  radio 64
  receiver 74
  safety 24
  transmitter 66
specifications>
  operational 23
spurious emissions 66
storage requirements 24
subcarrier spacing 65
synchronization 20, 136
System Configuration 19

T

temperature out-of-range 136
temperature range 23
test port 58
time alignment error 66
total power dynamic range 66
Transmission Blanking 61
transmitter intermodulation 66
transmitter specifications 66
Transport and Storage Requirements 24
transport requirements 24
TX control function 61
TX frequency interval 65
TX power control 61
TX power reduction 61
TX power status 136

U

Unpack 85

V

voltage out-of-range 136
volume 20
VSWR 20, 66, 74

W

Weather Proofing RU Connections 178
weight 20
wind pressure 23

Y

YRR 20