GX4000 R3.0 Series

E band Impulse Radio System

User Guide

T101-2293-01

Issue 1.03.02

2014 July

FUJITSU LIMITED

01 Issue History

Issue Number	Issue Date	History
1.02.01	9th December, 2013	First issue
1.02.02	30th May, 2014	Second issue 1 Additional figure (Mounting kit)
1.03.01	23th July, 2014	Third issue 1 Reviewed all and revised Additional figure (Antenna & Scope mounting kit)
1.03.02	23th July, 2014	Third issue 2 Additional table (throughput[RFC2544]) etc.

02 Scope

This document describes all of the Operation Manual for Fujitsu's BroadOne GX4000 series E band Impulse Radio System. Please note that the specifications are subjected to change without notice due to Fujitsu's further design improvements.

03 Non-Disclosure

Fujitsu Limited has taken every care that the contents of this document are correct at the time of going to press. If any errors are found, or any other comments are wished to be made, Please do not hesitate to contact us.

The contents of this document are protected under copyright and contain commercially and/or technically confidential information. The content of the document must not be used other than for purpose for which it was not provided nor may it be disclosed or copied (by authorized recipient or otherwise) without the prior written consent of an authorized officer of Fujitsu Limited.

Contents

1. System Description
   - 1.1 Overview …… 1-1
   - 1.2 System Overview …… 1-1
   - 1.3 Ordering Information …… 1-4
   - 1.4 General Specification …… 1-14
   - 1.5 Environmental Specification …… 1-24
   - 1.6 Power requirement …… 1-29
   - 1.7 Reference Data(Throughput) …… 1-34

2. Installation & Site Survey
   - 2.1 Overview …… 2-1
   - 2.2 Installation & Site Survey Guideline …… 2-1
   - 2.3 Unpacking …… 2-3
   - 2.4 Antenna Pole Mounting …… 2-4
     - 2.4.1 Antenna Pole Mounting Overview……2-4
     - 2.4.2 Goods Necessary for Installation…… 2-5
     - 2.4.3 Mechanical Dimension of Goods…… 2-6
     - 2.4.4 Breakdown Components of Mounting Kit……2-8
     - 2.4.5 Fixing Mounting Kit to Pole…… 2-9
   - 2.5 Assembly of Connection Material with E-Band IR …… 2-15
   - 2.6 Confirmation of Antenna Polarization…… 2-16
   - 2.7 Assembly of Antenna Base and E-Band IR…… 2-17
   - 2.8 Cable & Connector ……2-18
     - 2.8.1 Cable and Connector Code necessary for Installation…… 2-18
     - 2.8.2 Cable and Connector Description…… 2-18
     - 2.8.3 Cable and Connector Used …… 2-19
     - 2.8.4 Pin Assignment of Connector …… 2-21
     - 2.8.5 Cable Connector Location …… 2-23
     - 2.8.6 Cable Connection with External Equipment …… 2-23
   - 2.9 Cable Connection between External Equipment …… 2-24
   - 2.10 Assembly of Connector …… 2-27
     - 2.10.1 Optical Connector ……2-27
     - 2.10.2 Ether Connector …… 2-27.
     - 2.10.3 I/O Connector ……2-27
     - 2.10.4 Power Supply Cable ……2-32

3. Commissioning Test
   - 3.1 Overview …… 3-1
   - 3.2 Preparation …… 3-1
   - 3.3 Power Supply ON …… 3-2
   - 3.4 Starting WebLT …… 3-2
   - 3.5 Antenna Alignment Guideline …… 3-3
   - 3.6 Antenna Alignment Procedure …… 3-6
   - 3.7 Continuity Test ……3-11
   - 3.8 Applicable/Not Applicable of Menu Tree …… 3-15

4. Maintenance & Trouble Shooting
   - 4.1 Overview …… 4-1
   - 4.2 Routine Maintenance …… 4-1
   - 4.3 Loopback Function …… 4-5
   - 4.4 ODU Removal for Replacement …… 4-7
   - 4.5 ODU Replacement …… 4-9
   - 4.6 Firmware Update …… 4-12
   - 4.7 Housekeeping …… 4-13

5. Web-Based Local Terminal (WebLT)
5.1 WebLT …….. 5-1
5.2 Getting Started with WebLT ……. 5-2
5.3 Menu Tree for Ethernet Interface ……. 5-8
5.4 Menu Tree for CPRI Interface …….. 5-10
5.5 WebLT Menu and Description ……. 5-13
Summary …….. 5-15
Configuration > Alarm ……5-17
Configuration > Radio ……5-18
Configuration > System > Information …… 5-19
Configuration > System > IP …….. 5-20
Configuration > System > NTP …….. 5-21
Configuration > System > Log Server …….. 5-22
Configuration > Ports ……. 5-23
Configuration > Security > Switch > Users …… 5-24
Configuration > Security > Switch > HTTPS …… 5-26
Configuration > Security > Switch > Access Management … 5-27
Configuration > Security > Switch > SNMP > System ….. 5-28
Configuration > Security > Switch > SNMP > RMON > History 5-30
Configuration > Spanning Tree >CIST Ports …… 5-31
Configuration > Spanning Tree > CIST Ports ……. 5-32
Configuration > SyncE ……. 5-33
Configuration > Sync …… 5-35
Configuration > MAC Table ……. 5-36
Configuration > VLAN Translation > Ports to Group Mapping 5-38
Configuration > VLAN Translation > VID Translation Mapping 5-39
Configuration > VLANs Membership …… 5-40
Configuration > VLANs > Ports ……. 5-41

Monitor > Alarm ……. 5-43
Monitor > System > Information …….. 5-44
Monitor > System > Log …… 5-46
Monitor > Ports > Traffic Overview ……. 5-47
Monitor > Ports > Detailed Statistics Radio …… 5-48
Monitor > Security > Access Management Statistics …… 5-49
Monitor > Security > Switch > RMON > Statistics ……. 5-50
Monitor > Security > Switch > RMON > History ……5-52
Monitor > Spanning Tree > Bridge Status …….. 5-53
Monitor > Spanning Tree > Port Status …….. 5-55
Monitor > Spanning Tree > Port Statistics ……. 5-56
Monitor > MAC Table …… 5-57
Monitor > VLANs > VLAN Membership …… 5-58
Monitor > VLANs > VLAN Port …… 5-59
Monitor > Radio Performance > Current …… 5-60
Monitor > Radio > 15 Minutes …….. 5-61
Monitor > Radio Performance > 1 Day …… 5-62

Test & Diagnostics > Control ……5-63
Test & Diagnostics > Ping ……..5-64

Maintenance > Restart Devices ……5-65
Maintenance > Factory Default ……5-66
Maintenance > Software > Upload …….. 5-67
Maintenance > Software > Image Select …… 5-68
Maintenance > FPGA > Upload ……5-69
Maintenance > FPGA > Image Select ……5-70
Maintenance > Configuration > Save …….. 5-71

Maintenance > Configuration > Upload …….… 5-72
Maintenance > Data > CSV Download …….. 5-73

6. Appendix-A: Notice of Licensing …….. 6-1

Notes, Notices and Cautions

NOTE: A NOTE indicates important information that helps you make better use of E-band Impulse Radio Equipment and your System.

NOTICE: A NOTICE indicates either potential damage to hardware or loss of data and tells you how to avoid the problem.

CAUTION: A CAUTION indicates a potential for property damage, personal injury or death.

Important

Observe all warnings in the text and on equipment labels regarding high-voltage or high temperature conditions. The fallowing warnings and figures apply to most FUJITSU product.

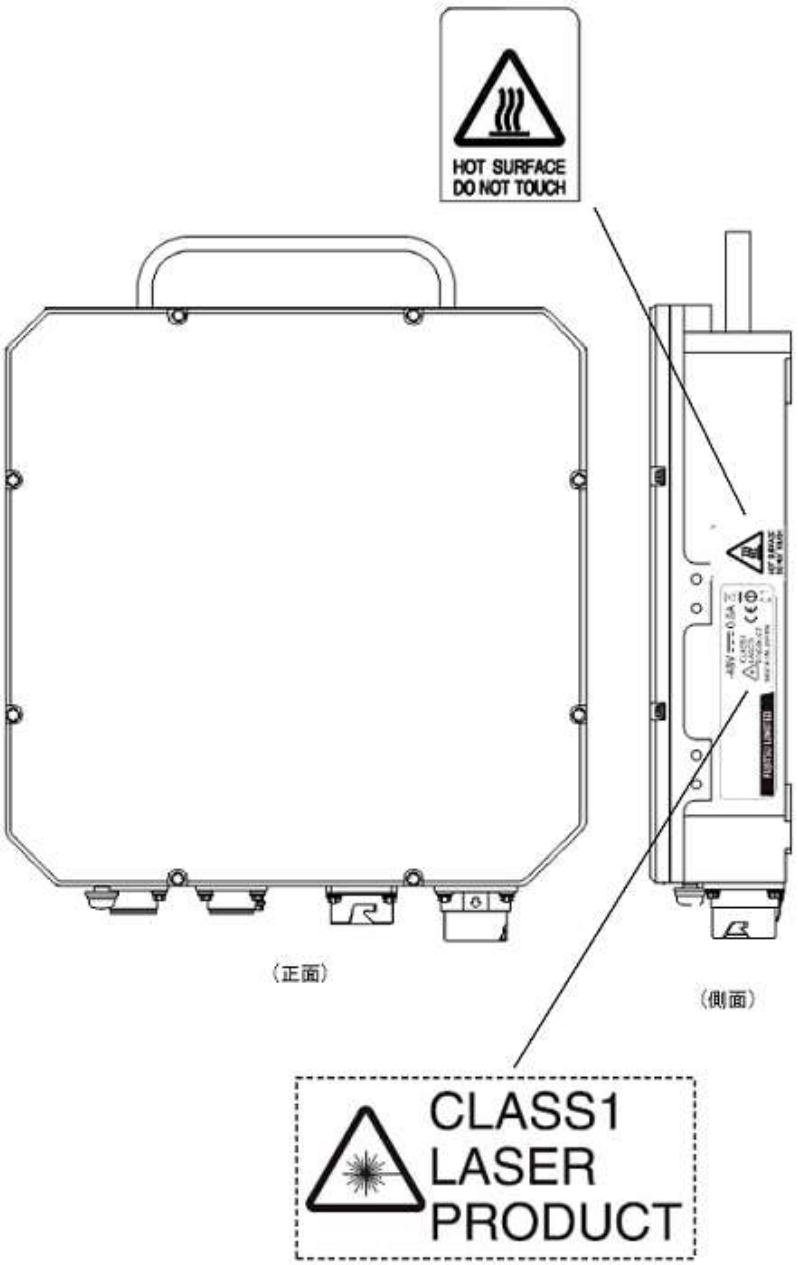

Fiber Warnings

Danger: Never handle exposed fiber with your bare hands or touch it to your body. Fiber fragments can enter the skin and are difficult to detect and remove.

Avertissements de Fibre

Danger: Ne jamais manipuler une fibre exposee avec vos mains nues et ne jamais la faire entrer directement en contact avec une partie du corps. Des fragments de fibre peuvent pénétrer la peau et leur détection et extraction sont extrêmement difficile.

Laser Safety Precautions

The FRX system consists of IEC 80625 Class 1 and Class 1M optical interface units.

Danger: The FRX system generates invisible laser radiation. Observe the following precautions:

- Avoid direct exposure to the beam.
- Never look into the end of a fiber, fiber cord, or fiber pigtail. Permanent eye damage or blindness can occur quickly when laser radiation is present.
- Viewing the laser output with certain optical instruments designed for use at a distance (for example, telescopes and binoculars) may pose an eye hazard.
- Use of controls, adjustments, or procedures other than those specified may result in hazardous laser radiation exposure.

Avertissements Relié au Laser

Le système FRX contient des interfaces optiques basées sur des lasers de IEC 80625 Classe 1 et Classe 1M.

Danger: Le système FRX génère du rayonnement laser invisible. Veuillez toujours observer les précautions suivantes:

- Eviter toute exposition directe au rayon.
- Ne jamais directement regarder le bout d'une fibre, une corde de fibre, ou la nacelle de la fibre. La présence, meme tres brève, d'un signal optique invisible peux engendrer des domanges permanent a l'oeil et a la vision.
- L'observation du signal laser avec certains instruments optiques conçus pour l'observation à longue distance (par exemple, les téléscopes et les jumelles) peuvent causer des dommages sévères a l'oeil et a la vision.
- L'application de procédures, calibration ou ajustements autres que celles specifiées dans ce manuel peuvent causer une exposition dangereuse aux radiations optiques transmises par cet équipement.

The following guidelines apply when installing this equipment:

- Systems should be installed only in restricted access areas (for example, dedicated equipment rooms or equipment closets) in accordance with the National Electrical Code, ANSI/NFPA 70.
- Equipment should be mounted ONLY over a non-combustible surface.
- Caution: To de-energize the equipment, all input power circuits (-48 V DC battery) must be removed prior to maintenance/servicing or upgrading.
- Care should be taken not to compromise the stability of the rack by the installation of this equipment.
- Care should be taken not to overload the supply circuit.
- For the input power harness, use only UL-listed, dual-closed-loop connectors.

Les mesures de sécurité suivantes s'appliquent lors de l'installation de cet équipement:

- Le système devrait seulement être installé dans une pièce avec un accès controlé (par exemple, une pièce dédiée ou un placard d'équipement) conforme au Code Electrique National, ANSI/NFPA 70.
- Cet équipement est concu pour être strictement installé au-dessus d'équipement non combustible.
- Avertissement: S'assurer que toute source d'alimentation électrique, sous la forme de batterie ou courant direct a -48 V DC, est proprement déconnecté avant d'entreprendre toute opération de maintenance sur l'équipement.
- L'installateur de cet equipement devrait s'assurer que son installation ne compromettra pas la stabilité de l'étagère ou du porte-équipement ou il est installé.
- L'installateur devrait s'assurer de ne pas surcharger lecircuit d'alimentation électrique.
- Utilisez seulement des connecteurs de boucle fermés doubles approuvés par Underwriters Laboratories (UL Listed) pour connecter cet equipment a la source d'alimentation.

Flammable Liquids Warning

Danger: Do not use flammable liquids or sprays around telecommunications equipment. Electrical fan motors and other potential ignition sources within the equipment might ignite the flammable material and cause personal injury or damage to the equipment. If uncertain about whether a liquid or spray is flammable, contact the manufacturer.

Mise en Garde Concernant les Liquides Inflammables

Avertissement: Ne pas utiliser de liquides ou aérosols volatiles près de l'équipement de télécommunication. Les ventilateurs électriques ainsi que d'autres sources d'allumage à l'intérieur de l'équipement pourraient enflammer les liquides ou aérosols et causer des blessures corporelles ou du dommage a l'équipement. Veuillez consulter le fabricant de tout liquide ou aérosols utilise près de l'équipement si vous êtes incertains de son degré d'inflammabilité.

The contents of this document are subject to change without notice since Fujitsu Limited reserves the right to make changes in equipment design or components or firmware release roadmap without notice, as progress in engineering or manufacturing methods may warrant. Neither this document nor any portion thereof, is to be reproduced in any form whatsoever without written permission from Fujitsu Limited.

Copyright © 2012 Fujitsu Limited. All Rights Reserved.

Microsoft is a registered trademark of the Microsoft Corporation. Windows is a trademark of the Microsoft Corporation. All other product names mentioned herein are the trademarks of their respective owners.

1 System Description

1.1 Overview

This chapter describes the system description of BroadOne GX4000 E-band Impulse radio. The main topics covered are:

- System Overview
- Ordering Information
- General Specification
- Environmental Specification
- Power requirement

1.2 System Overview

Two Types of Signal Interface

Fujitsu BroadOne GX4000 series E-band impulse radio is complete All-In-One ODU radio employing impulse modulation technology.

Two (2) types of signal interfaces are available, one is Ethernet interface (10GbE and/or 1GbE) and the other is CPRI (Common Public Radio Interface) (*1) interface for mobile communication.

Ethernet Interface

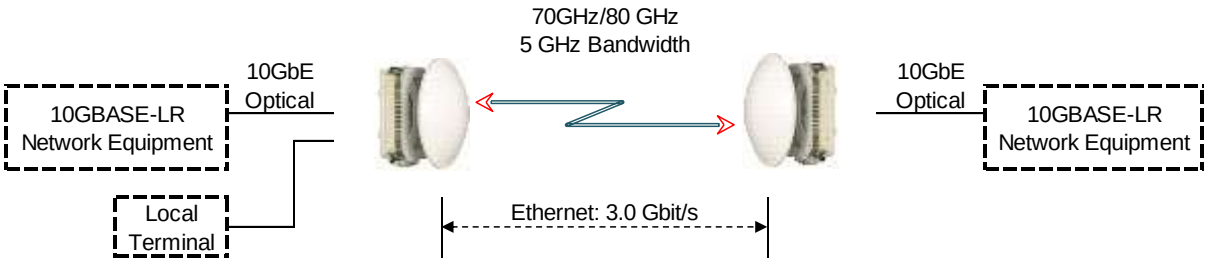

Figure 1.1a Ether System-1 (10GbE Optical Interface)

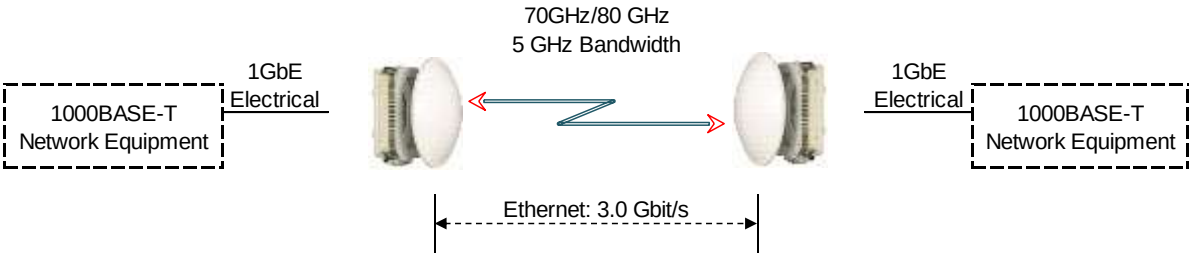

Figure 1.1b Ether System-2 (1GbE Electrical Interface)

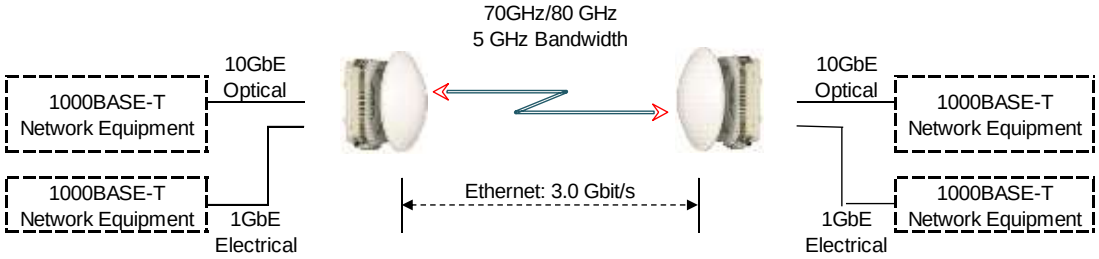

Figure 1.1c Ether System-3 (10GbE Optical & 1GbE Electrical Interface)

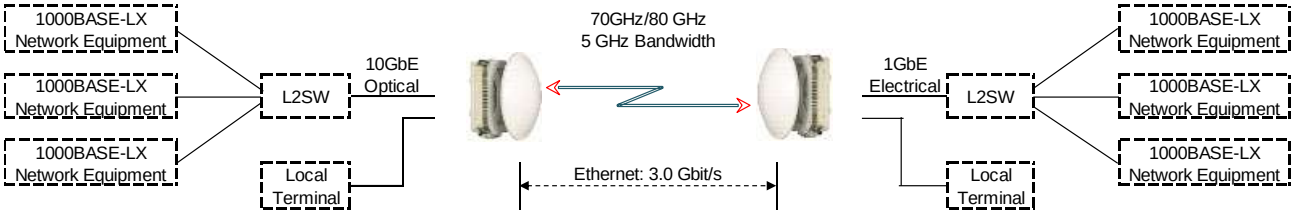

Figure 1.1d Ethernet System-4 (L2SW Interface)

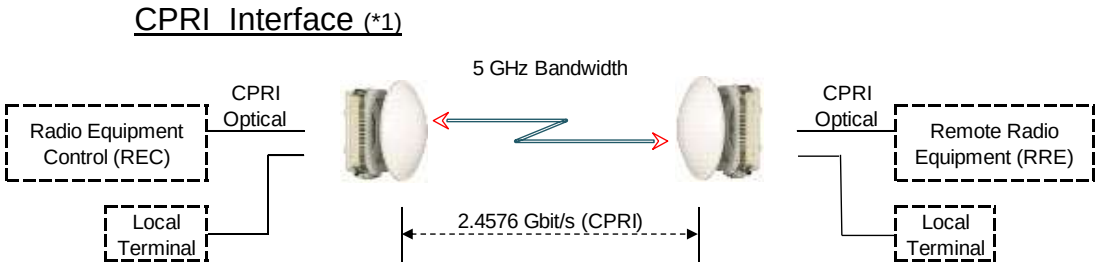

Figure 1.1e CPRI Interface

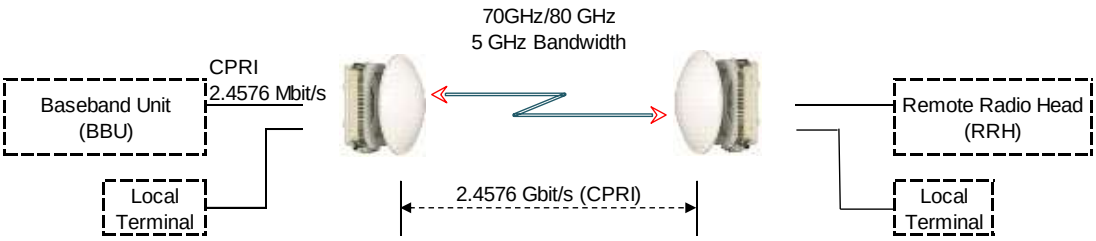

Figure 1.1f CPRI Interface

Note-*1:

The **Common Public Radio Interface** (CPRI™) is the successful industry cooperation defining the publicly available specification for the key internal interface of radio base stations between the Radio Equipment Control (REC) and the Radio Equipment (RE). The Parties cooperating to define the CPRI Specification are now encompassing Ericsson, Huawei, NEC, Nokia Siemens Networks and Alcatel-Lucent. Nortel contributed as member of the CPRI cooperation to CPRI Specification versions 1.4, 2.1, 3.0 4.0 and 4.1 and left the cooperation in December 2009

BBU: Base Band Unit for Japan domestic market
RRH: Remote Radio Head for Japan domestic market

Features & Performance

- Wireless Innovation based on Impulse Radio
- 70/80 GHz E-Band 1+0 point-to-point radio
- Lightweight, small size zero-footprint ODU design
  < 3.0 litter and < 3.0 kg
- High power amplifier using GaAs Field Effect Transistor (GaAs FET)
- Low power consumption (< 20 W / 1+0)
- High Capacity Radio
  - 3,000 Mbit/s for Ethernet interface
  - 2,457.6 Mbit/s for CPRI interface (4 x 614.4 Mbit/s)
- Low latency for multimedia application
- Transmit Power Control (ATPC/MTPC) available
- Read Solomon error correction
- Web-based local terminal and EMS compatible SNMP
- 1-feet or 2-feet cassegrain antenna with fixing material to pole

Application

- LTE/WiMAX Backhaul
- Fiber Extension
- Mobile Backhaul
- Local Area Network Extension
- Metropolitan Area Networks (MAN)

1.3 Ordering Information

Ordering Guide

< Configuration Tree of GX4000 System per Link >

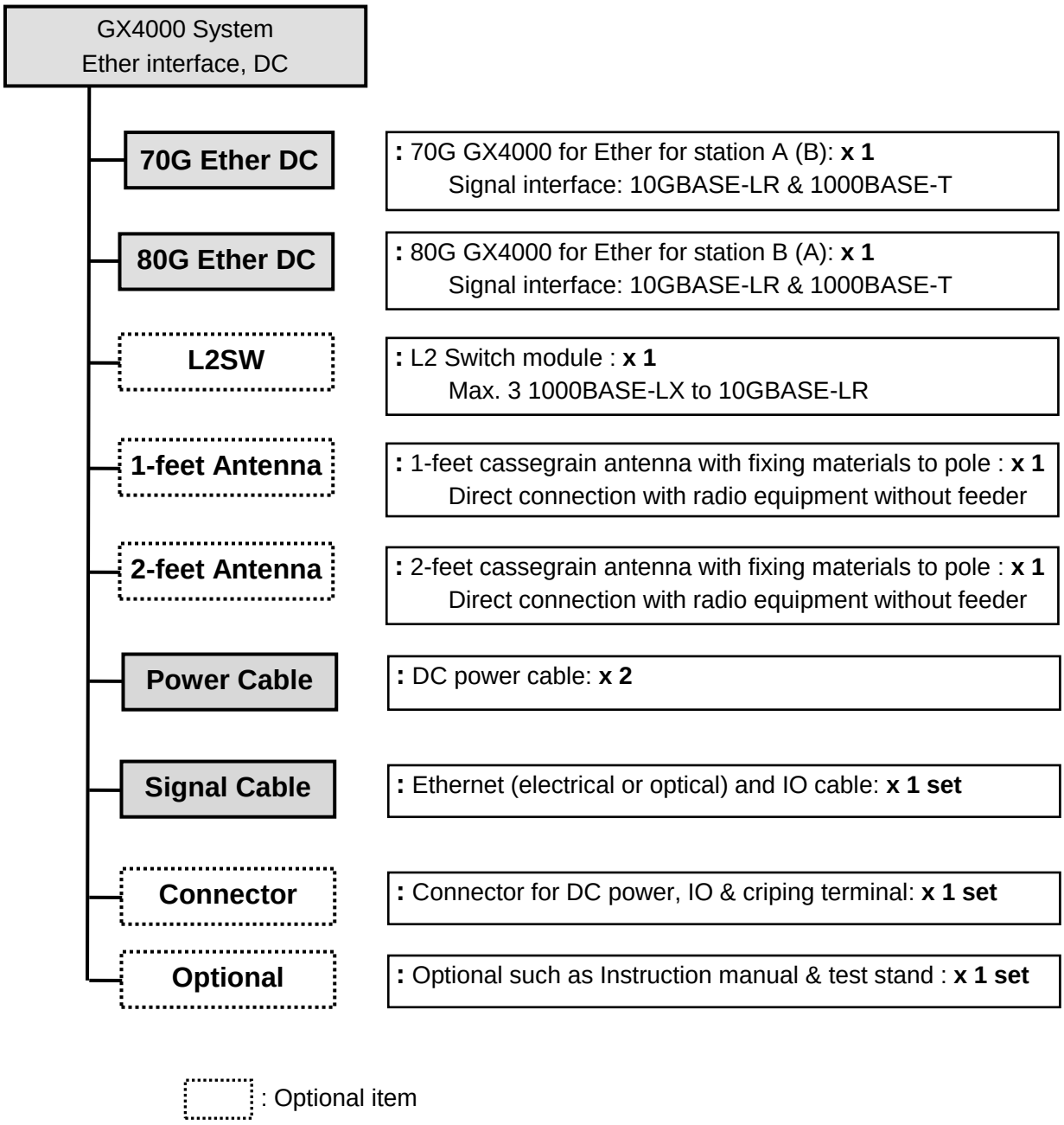

Figure 2.1a Configuration Tree for Ethernet Interface & DC Feed

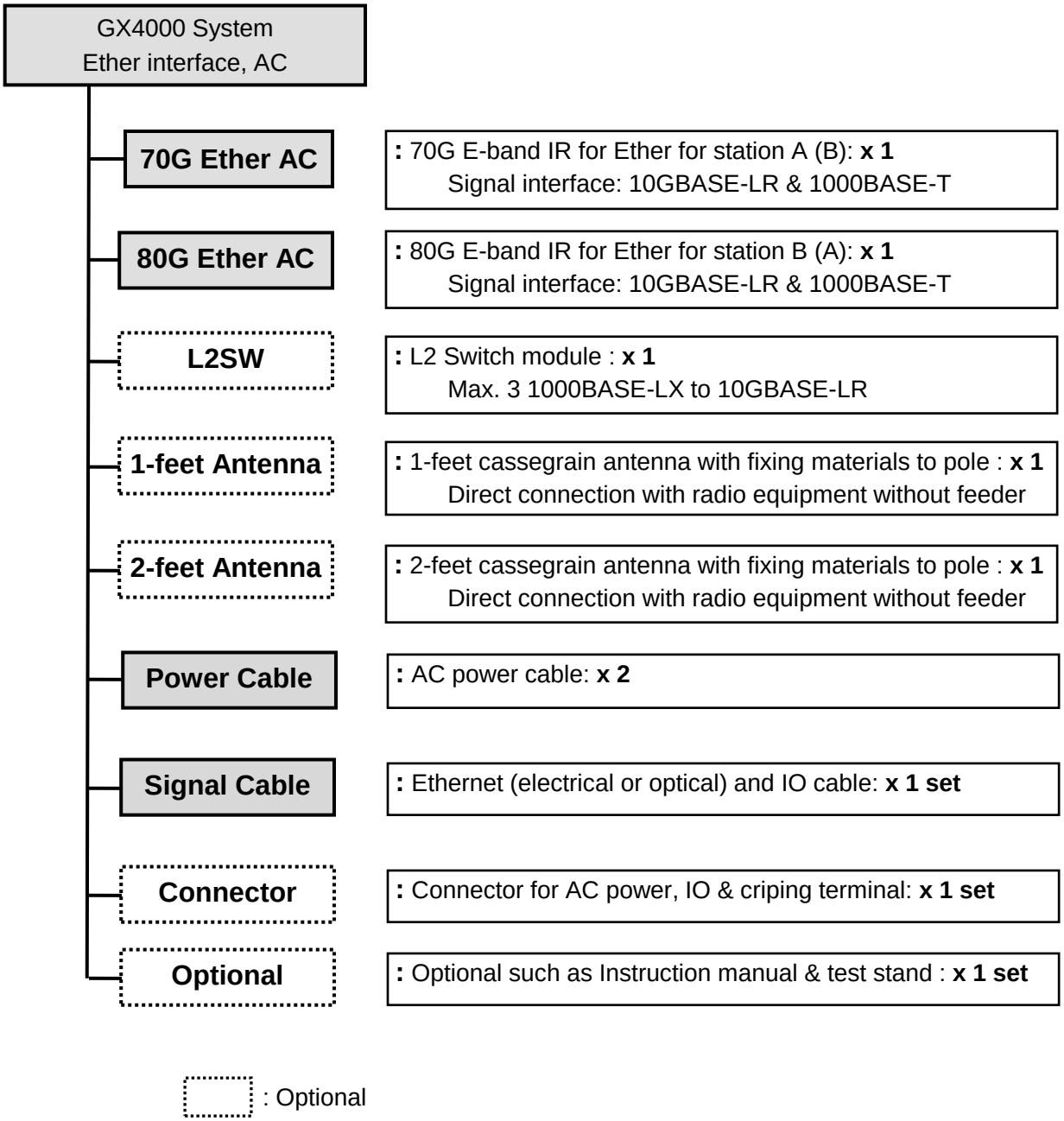

Figure 2.1b Configuration Tree for Ethernet Interface & AC Feed

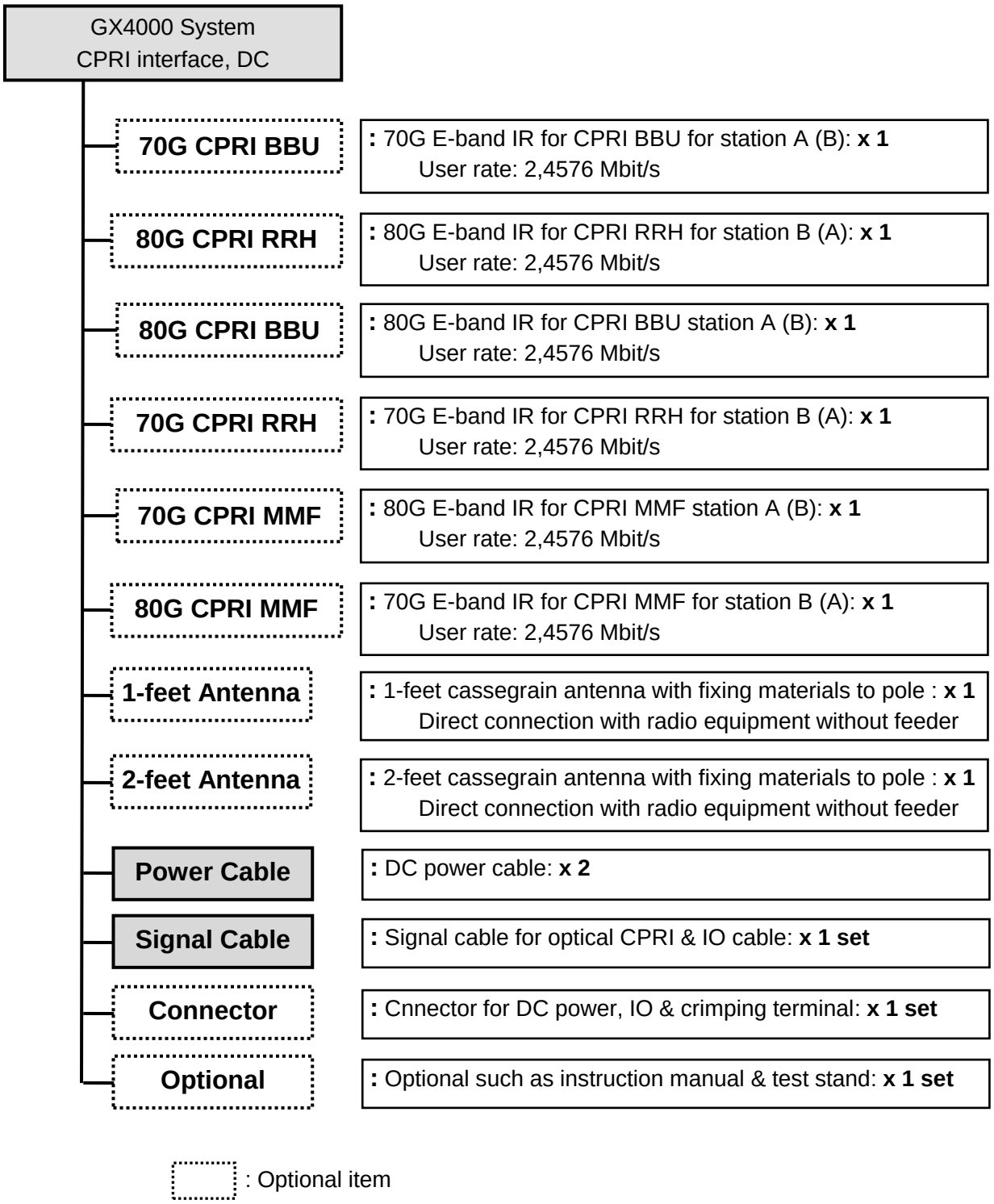

Figure 2.1c Configuration Tree for CPRI Interface & DC Feed

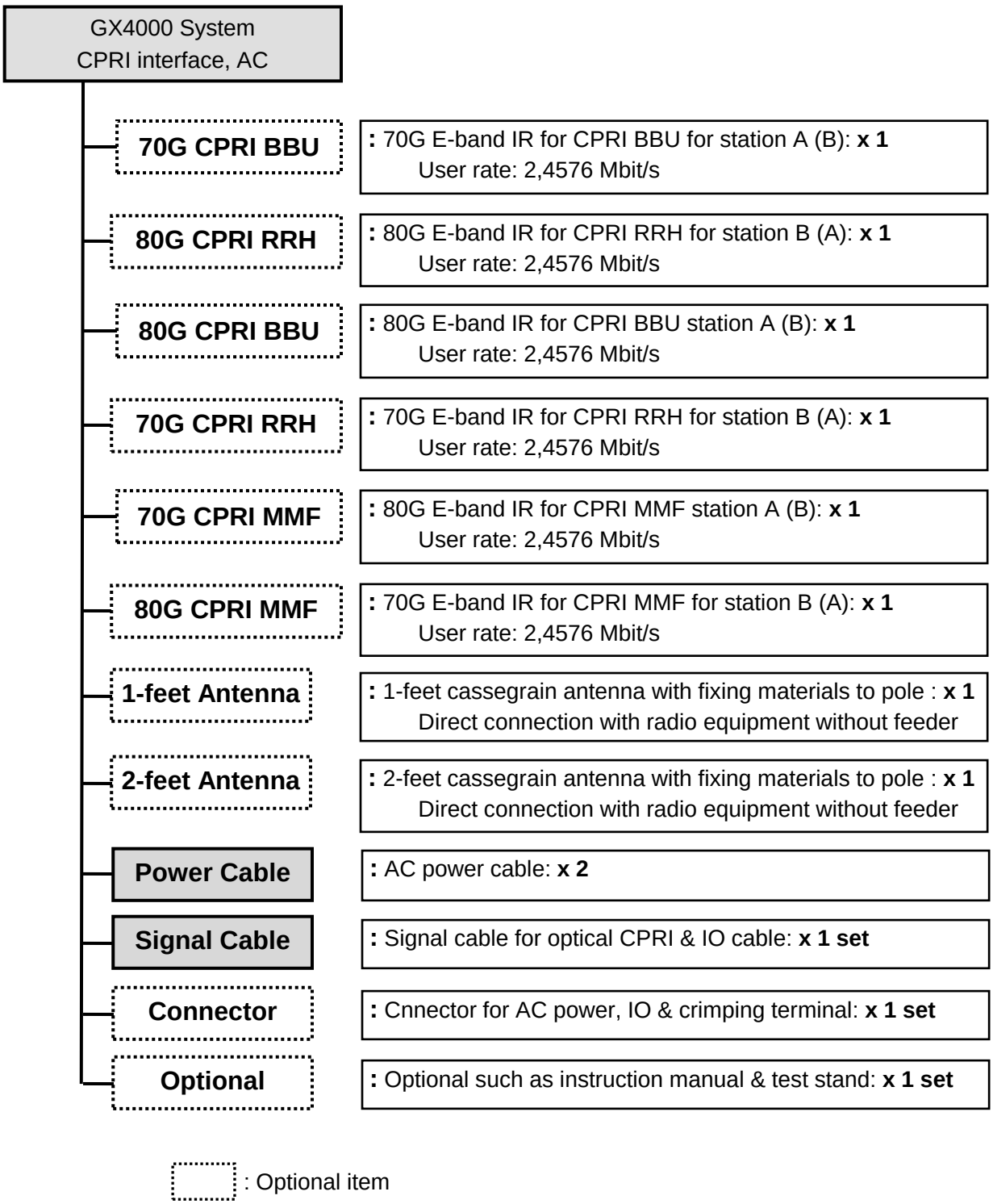

Figure 2.1d Configuration Tree for CPRI Interface & AC Feed

Mechanical Configuration

To introduce the GX4000 system, it is necessary to select equipment, proper materials and cables regarding to the Application Code. Table 2.1 shows the code.

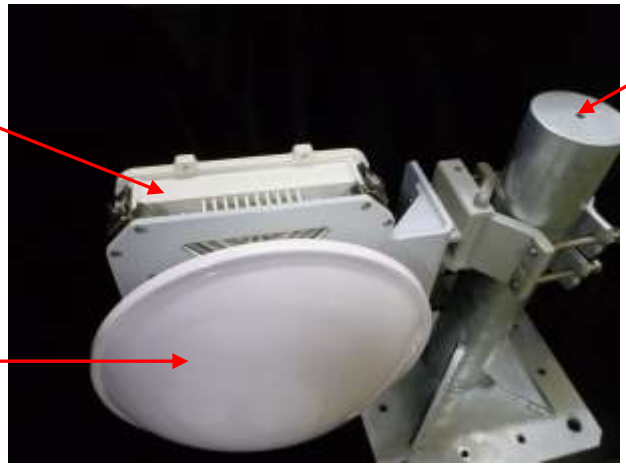

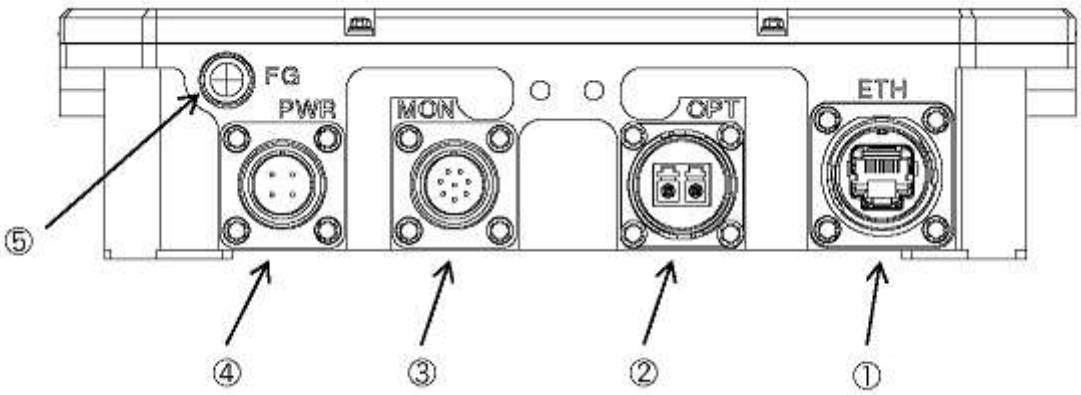

Mechanical Connection of GX4000

No	Indication	Cable	Description	Cable
1	ETH	RJ-45	1GbE electrical or maintenance port	Ether cable
2	OPT	Ether: 2xLC CPRI 1-core: 1xSC CPRI 2-core: 2xLC	Optical IN/OUT	Optical cable
3	MON	Round 8P	Housekeeping RSL monitoring	IO cable Monitor cable
4	PWR	DC: Round 4P AC: Round 3P	DC -48 V AC: 100 to 240 V	DC power cable AC power cable
5	FG	M8 bolt	Frame ground	

Ordering Code

Table 2.1a Code for GX4000 Equipment

Description		*Ordering Code*
GX4000 Ether 70G DC	TX=70 GHz & RX=80 GHz band Ethernet interface, 3.0 Gbps, 2-SMF, DC -48 V	GX4380LE3D
GX4000 Ether 80G DC	TX=80 GHz & RX=70 GHz band Ethernet interface, 3.0 Gbps 2-SMF, DC -48 V	GX4380UE3D
GX4000 CPRI BBU 70G DC	TX=70 GHz & RX=80 GHz band CPRI BBU interface, 2.4576 Gbps 1-SMF, DC -48 V	GX4380LB3D
GX4000 CPRI RRH 80G DC	TX=80 GHz & RX=70 GHz band CPRI RRH interface, 2.4576 Gbps 1-SMF, DC -48 V	GX4380UB3D
GX4000 CPRI BBU 80G DC	TX=80 GHz & RX=70 GHz band CPRI BBU interface, 2.4576 Gbps 1-SMF, DC -48 V	GX4380UB3D
GX4000 CPRI RRH 70G DC	TX=80 GHz & RX=70 GHz band CPRI RRH interface, 2.4576 Gbps 1-SMF, DC -48 V	GX4380LR3D
GX4000 CPRI MMF 70G DC	TX=70 GHz & RX=80 GHz band CPRI MMF interface, 2.4576 Gbps 2-MMF, DC -48 V	GX4380UC3D
GX4000 CPRI MMF 80G DC	TX=80 GHz & RX=70 GHz band CPRI MMF interface, 2.4576 Gbps 2-MMF, DC -48 V	GX4380LC3D
GX4000 Ether 70G AC	TX=70 GHz & RX=80 GHz band Ether interface, 3.0 Gbps 2-SMF, AC 100 - 240 V	GX4380LE3A
GX4000 Ether 80G AC	TX=80 GHz & RX=70 GHz band Ether interface, 3.0 Gbps 2-SMF, AC 100 - 240 V	GX4380UE3A
GX4000 CPRI BBU 70G AC	TX=70 GHz & RX=80 GHz band CPRI BBU interface, 2.4576 Gbps 1-SMF, AC 100 – 240 V	GX4380LB3A
GX4000 CPRI RRH 80G AC	TX=80 GHz & RX=70 GHz band CPRI RRH interface, 2.4576 Gbps 1-SMF, AC 100 – 240 V	GX4380UR3A
E-band CPRI BBU 80G AC	TX=80GHz & RX=70 GHz band CPRI BBU interface, 2.4576 Gbps 1-SMF, AC100 to 240 V	GX4380UB3A
E-band CPRI RRH 70G AC	TX=70 GHz & RX=80 GHz band CPRI RRH interface, 2.4576 Gbps 1-SMF, AC 100 to 240 V	GX4380LR3A
GX4000 CPRI MMF 70G AC	TX=70 GHz & RX=80 GHz band CPRI interface, 2.4576 Gbps 2-MMF, AC 100 – 240 V	GX4380UC3A
GX4000 CPRI MMF 80G AC	TX=80 GHz & RX=70 GHz band CPRI interface, 2.4576 Gbps 2-MMF, AC 100 – 240 V	GX4380LC3A

Table 2.1b Code for Antenna

Description		*Ordering Code*
Cassegrain Antenna, 1-feet	1-feet antenna Direct connection to GX4000 Including mounting kit	GX4K80ATP11
Cassegrain Antenna, 2-feet	1-feet antenna Direct connection to GX4000 Including mounting kit	GX4K80ATP12

Table 2.1c Code for DC Power Cable

Description		*Ordering Code*
DC Power cable, 1 m	DC power supply cable, 1 m	GX4K80CBPD01
DC Power cable, 5 m	DC power supply cable, 5 m	GX4K80CBPD05
DC Power cable, 10 m	DC power supply cable, 10 m	GX4K80CBPD10
DC Power cable, 20 m	DC power supply cable, 20 m	GX4K80CBPD20
DC Power cable, 30 m	DC power supply cable, 30 m	GX4K80CBPD30
DC Power cable, 40 m	DC power supply cable, 40 m	GX4K80CBPD40
DC Power cable, 50 m	DC power supply cable, 50 m	GX4K80CBPD50
DC Power cable, 60 m	DC power supply cable, 60 m	GX4K80CBPD60
DC Power cable, 70 m	DC power supply cable, 70 m	GX4K80CBPD70
DC Power cable, 80 m	DC power supply cable, 80 m	GX4K80CBPD80
DC Power cable, 90 m	DC power supply cable, 90 m	GX4K80CBPD90
DC Power cable, 100 m	DC power supply cable, 100 m	GX4K80CBPD99

Table 2.1d Code for AC Power Cable

Description		*Ordering Code*
AC Power cable, 1 m	AC power supply cable, 1 m	GX4K80CBPA01
AC Power cable, 5 m	AC power supply cable, 5 m	GX4K80CBPA05
AC Power cable, 10 m	AC power supply cable, 10 m	GX4K80CBPA10
AC Power cable, 20 m	AC power supply cable, 20 m	GX4K80CBPA20
AC Power cable, 30 m	AC power supply cable, 30 m	GX4K80CBPA30
AC Power cable, 40 m	AC power supply cable, 40 m	GX4K80CBPA40
AC Power cable, 50 m	AC power supply cable, 50 m	GX4K80CBPA50
AC Power cable, 60 m	AC power supply cable, 60 m	GX4K80CBPA60
AC Power cable, 70 m	AC power supply cable, 70 m	GX4K80CBPA70
AC Power cable, 80 m	AC power supply cable, 80 m	GX4K80CBPA80
AC Power cable, 90 m	AC power supply cable, 90 m	GX4K80CBPA90
AC Power cable, 100 m	DC power supply cable, 100 m	GX4K80CBPA99

Table 2.1e Code for Ether Electrical Cable

Description		*Ordering Code*
Ether electrical cable, 1 m	Ether cable, 1 m	GX4K80CBET01
Ether electrical cable, 5 m	Ether cable, 5 m	GX4K80CBET05
Ether electrical cable, 10 m	Ether cable, 10 m	GX4K80CBET10
Ether electrical cable, 20 m	Ether cable, 20 m	GX4K80CBET20
Ether electrical cable, 30 m	Ether cable, 30 m	GX4K80CBET30
Ether electrical cable, 40 m	Ether cable, 40 m	GX4K80CBET40
Ether electrical cable, 50 m	Ether cable, 50 m	GX4K80CBET50
Ether electrical cable, 60 m	Ether cable, 60 m	GX4K80CBET60
Ether electrical cable, 70 m	Ether cable, 70 m	GX4K80CBET70
Ether electrical cable, 80 m	Ether cable, 80 m	GX4K80CBET80
Ether electrical cable, 90 m	Ether cable, 90 m	GX4K80CBET90

Table 2.1f Code for IO Cable

Description		*Ordering Code*
IO cable, 1 m	IN/OUT cable, 1 m	GX4K80CBAL01
IO cable, 5 m	IN/OUT cable, 5 m	GX4K80CBAL05
IO cable, 10 m	IN/OUT cable, 10 m	GX4K80CBAL10
IO cable, 20 m	IN/OUT cable, 20 m	GX4K80CBAL20
IO cable, 30 m	IN/OUT cable, 30 m	GX4K80CBAL30
IO cable, 40 m	IN/OUT cable, 40 m	GX4K80CBAL40
IO cable, 50 m	IN/OUT cable, 50 m	GX4K80CBAL50
IO cable, 60 m	IN/OUT cable, 60 m	GX4K80CBAL60
IO cable, 70 m	IN/OUT cable, 70 m	GX4K80CBAL70
IO cable, 80 m	IN/OUT cable, 80 m	GX4K80CBAL80
IO cable, 90 m	IN/OUT cable, 90 m	GX4K80CBAL90
IO cable, 100 m	IN/OUT cable, 100 m	GX4K80CBAL99

Table 2.1g Code for Ether Optical Cable

Description		*Ordering Code*
Ether optical cable, 1 m	2-SMF, single mode, 1 m	GX4K80CB2S01
Ether optical cable, 5 m	2-SMF, single mode, 5 m	GX4K80CB2S05
Ether optical cable, 10 m	2-SMF, single mode, 10 m	GX4K80CB2S10
Ether optical cable, 20 m	2-SMF, single mode, 20 m	GX4K80CB2S20
Ether optical cable, 30 m	2-SMF, single mode, 30 m	GX4K80CB2S30
Ether optical cable, 40 m	2-SMF, single mode, 40 m	GX4K80CB2S40
Ether optical cable, 50 m	2-SMF, single mode, 50 m	GX4K80CB2S50
Ether optical cable, 60 m	2-SMF, single mode, 60 m	GX4K80CB2S60
Ether optical cable, 70 m	2-SMF, single mode, 70 m	GX4K80CB2S70
Ether optical cable, 80 m	2-SMF, single mode, 80 m	GX4K80CB2S80
Ether optical cable, 90 m	2-SMF, single mode, 90 m	GX4K80CB2S90
Ether optical cable, 100 m	2-SMF, single mode, 100 m	GX4K80CB2S99

Table 2.1h Code for CPRI 1-SMF Optical Cable

Description		*Ordering Code*
CPRI optical cable,1 m	CPRI, 1-SMF, single mode, 1 m	GX4K80CB1S01
CPRI optical cable,5 m	CPRI, 1-SMF, single mode, 5 m	GX4K80CB1S05
CPRI optical cable,10 m	CPRI, 1-SMF, single mode, 10 m	GX4K80CB1S10
CPRI optical cable,20 m	CPRI, 1-SMF, single mode, 20 m	GX4K80CB1S20
CPRI optical cable,30 m	CPRI, 1-SMF, single mode, 30 m	GX4K80CB1S30
CPRI optical cable,40 m	CPRI, 1-SMF, single mode, 40 m	GX4K80CB1S40
CPRI optical cable,50 m	CPRI, 1-SMF, single mode, 50 m	GX4K80CB1S50
CPRI optical cable,60 m	CPRI, 1-SMF, single mode, 60 m	GX4K80CB1S60
CPRI optical cable,70 m	CPRI, 1-SMF, single mode, 70 m	GX4K80CB1S70
CPRI optical cable,80 m	CPRI, 1-SMF, single mode, 80 m	GX4K80CB1S80
CPRI optical cable,90 m	CPRI, 1-SMF, single mode, 90 m	GX4K80CB1S90
CPRI optical cable,100 m	CPRI, 1-SMF, single mode, 100 m	GX4K80CB1S99

Table 2.1i Code for CPRI 2-SMF Optical Cable

Description		*Ordering Code*
CPRI optical cable,1 m	CPRI, 2-SMF, multi mode, 1 m	GX4K80CB2M01
CPRI optical cable,5 m	CPRI, 2-SMF, multi mode, 5 m	GX4K80CB2M05
CPRI optical cable,10 m	CPRI, 2-SMF, multi mode, 10 m	GX4K80CB2M10
CPRI optical cable,20 m	CPRI, 2-SMF, multi mode, 20 m	GX4K80CB2M20
CPRI optical cable,30 m	CPRI, 2-SMF, multi mode, 30 m	GX4K80CB2M30
CPRI optical cable,40 m	CPRI, 2-SMF, multi mode, 40 m	GX4K80CB2M40
CPRI optical cable,50 m	CPRI, 2-SMF, multi mode, 50 m	GX4K80CB2M50
CPRI optical cable,60 m	CPRI, 2-SMF, multi mode, 60 m	GX4K80CB2M60
CPRI optical cable,70 m	CPRI, 2-SMF, multi mode, 70 m	GX4K80CB2M70
CPRI optical cable,80 m	CPRI, 2-SMF, multi mode, 80 m	GX4K80CB2M80
CPRI optical cable,90 m	CPRI, 2-SMF, multi mode, 90 m	GX4K80CB2M90
CPRI optical cable,100 m	CPRI, 2-SMF, multi mode, 100 m	GX4K80CB2M99

Table 2.1j Code for DC Power Connector

Description		*Ordering Code*
DC power connector	4P connector	GX4K80CNPD

Table 2.1k Code for AC Power Connector

Description		*Ordering Code*
AC power connector	3P connector	GX4K80CNPA

Table 2.1l Code for IO Connector

Description		*Ordering Code*
IO connector	8P connector	GX4K80CNHK

Table 2.1m Code for Crimping Connector

Description		*Ordering Code*
Crimping terminal	M8 crimping terminal	GX4K80CNFG

Table 2.1n Code for Optional Materials

Description		*Ordering Code*
Installation kit	Installation manual, paper media	GX4K80MNJAP
Installation kit	Installation manual, soft media	GX4K80MNJAC
Monitor cable	Monitor cable for RSL monitoring	GX4K80CBMT
Test stand	Test stand on table	GX4K80TFTS
Test stand kit	Test stand on table x2	GX4K80TFTS2
Fixing material for telescope	Material for antenna orientation	GX4K80ADMK
Telescope	Telescope for antenna orientation	GX4K80ADSD
Sighting device	Sighting device for antenna orientation	GX4K80ADSSD

Table 2.1o Code for Optional L2SW Module

Description		*Ordering Code*
L2SW	L2 switch module	SJ324TC113
10G expansion module	10G expansion module	SJ10GXFPA
10G optical module	10G optical module	SJXFPLR
1G optical module	1G optical module	SJSFPLX

1.4 General Specifications

System Specification

Table 1.4-1 System Specification

Item	Description
RF Band Used	70/80 GHz band (E-Band) in accordance with ETSI EN302 217-3 V1.3.1 (2009-07) Annex UC 70 GHz band: 71,0 to 76.0 MHz 80 GHz band: 81,0 to 86.0 MHz
Occupied Bandwidth	Less than 5,000 MHz
Transmission Capacity	Digital Transfer rate: In case of Ether interface: 3,000 Mbit/s In case of CPRI interface: 2,457.6 Mbit/s Total digital transfer rate: 70 GHz band: 3,266.786 Mbit/s 80 GHz band: 3,274.286 Mbit/s
Radio Symbol Rate	70 GHz band: 3,266.786 MHz 80 GHz band: 3,274.286 MHz
System Configuration	1+0, Terminal configuration Block diagram of GX4000 is shown in Figure 1.4-1.
TX Power Output	0 to +10 dBm measured at Point C' (antenna port) in accordance with ETSI EN302 217-1 V1.2.1 (2007-06)
TX Output Control	ATPC/MTPC
Received RF Input	Minimum RSL: -54 dBm typical at BER of 10^{-6} Maximum RSL: -25 dBm typical at BER of 10^{-6} AGC range: -56 to -25 dBm measured at Point C (antenna port) in accordance with ETSI EN302 217-1 V1.2.1 (2007-06)
Modulation	OOK (ON-OFF-Keying)
Error Correction	Reed Solomon (255/239) with Bit Interleave function
Route ID	0 to 15, pre-settable
Baseband Interface	(1) 10GBASE-LR and/or 1000BASE-T or (2) CPRI or (3) CPRI BBU for Base Band Unit interface or (4) CPRI RRH for Remote Radio Head interface
DC Power Supply	DC -48 Vdc (-40.5 to -57 Vdc) AC 100 to 240 V, 50/60 Hz
Power Consumption	25 W typical, 30 W guaranteed
Dimension	230 x 230 x 56 mm excluding protrusions
Weight	GX4000: < 3 kg 1-feet antenna with fixing materials to pole: < 10 kg 2-feet antenna with fixing materials to pole: < 14 kg

Transmitter Side Specification

Table 1.4-2 Transmitter Part

Item	Description
RF Output Power	0 to +10 dBm measured at antenna port RF output power tolerance: -3.0 / +0.8 dB
RF Output Power when set TX OFF	< -40 dBm
CW/MOD Selection	None
RF Band used and RF equivalent center frequency	70/80 GHz band (E-band) in accordance with ETSI EN302 217-3 V1.3.1 (2009-07) Annex UC 70 GHz band: 71,125 to 75,625 MHz (f0 = 73,503 GHz) 80 GHz band: 81,125 to 85,625 MHz (f0 = 83,494 GHz)
Output Power Density Mask	In accordance with ETSI EN 302 217-3 V1.3.1 (2009-07) Annex-UC measured at antenna port as shown in Figure 1.4-2a.
Emission Outside the 71-76 GHz & 8.1-86 GHz Range	(1) Output power spectral density, at antenna port, falling outside of the 71-76 GHz band edge or below the lower band edge of 81-86 GHz band should be limited to a maximum of -55 dBW/MHz. (2) For the band 86-92 GHz is allocated to Passive Services and, in particular to Earth Extension Satellite Services, for their protection, unwanted emission power density at the antenna port is in accordance with Figure 1.4-2b.
TX Spurious Emission - External	In accordance with ETSI EN301 390 V1.2.1 (2003-11) For the interference into other systems operation for the fundamental frequency range of 13 GHz to 150 GHz band, spurious emission allowable is shown in Figure 1.4-2c. (a) < -50 dBm in the frequency range of 30 MHz to 21.2 GHz (b) < -30 dBm in the frequency range of 21.2 GHz to 2nd harmonic Spurious emission is defined as any emission at frequencies which are outside the nominal carrier frequency by more than +/- 250% of the aggregated channel separation (4,500 MHz of 70/80 GHz band).
ATPC	Automatic transmit power control (ATPC) is available as standard. Power control level: 0 to +10 dBm, continuous Initiation threshold: Normal RSL +/- 3 dB Restoration threshold; Normal RSL +/- 2 dB Response time: 20 dB/sec Control initiator: Pre-settable Received signal Level (RSL) Pre-settable RSL: -30 dBm or -40 dBm
MTPC	Manual transmit power control (MTPC) is available as standard. Power control level: 0 to 10 dB, 0.5-dB step Output level variation: +/- 0.5 dB Control: Manual
Symbol Rate	70 GHz (Lower band): 3,266.786 Mbit/s 80 GHz (Upper band): 3.274.286 Mbit/s
RF Output VSWR	Less than 1.5 measured at antenna port
RF Connector	UG-387 / U (flange)

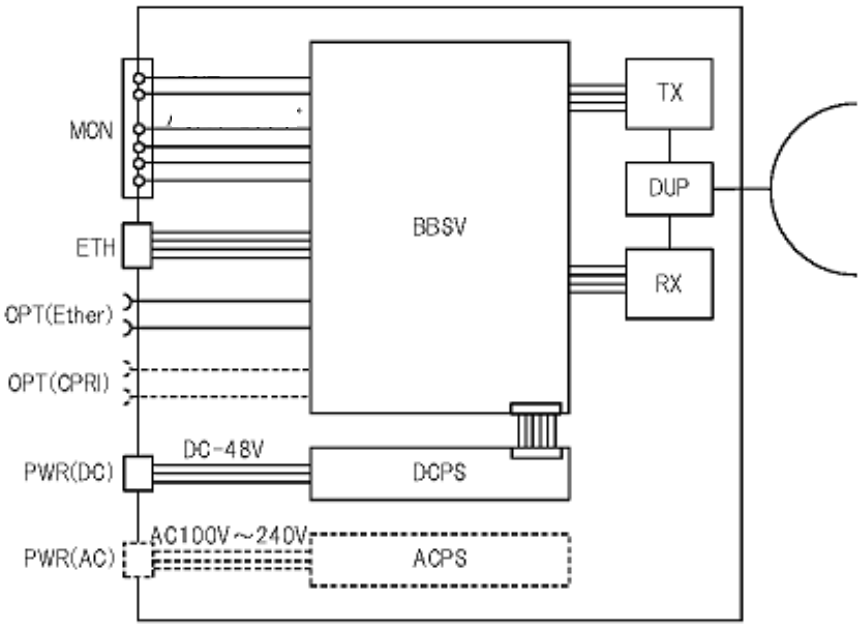

Figure 1.4-1 Schematic Block Diagram of GX4000

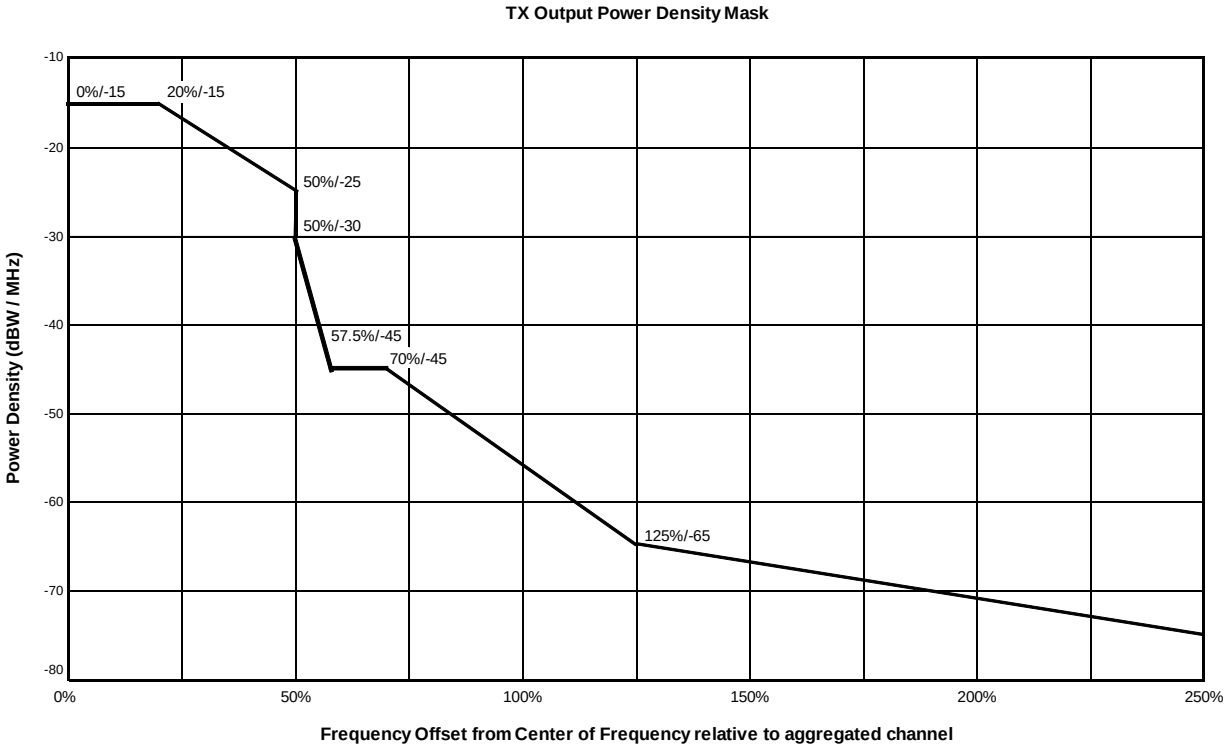

Figure 1.4-2a Output Power Density Mask
(In accordance with ETSI EN 302 217-3 V1.3.1 (2009-07) Annex UC

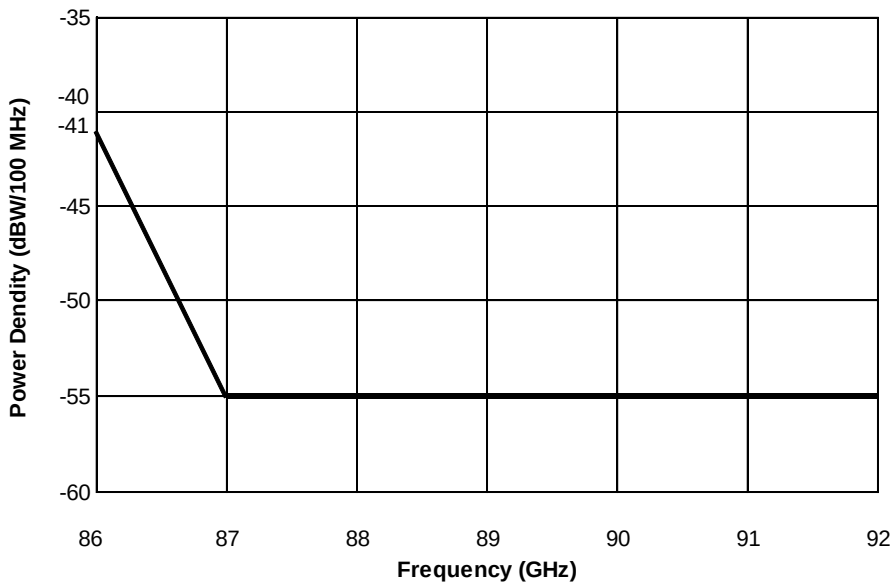

Figure 1.4-2b Unwanted Emission Power Density at the Antenna port
(In accordance with ETSI EN 302 217-3 V1.3.1 (2009-07) Annex UC

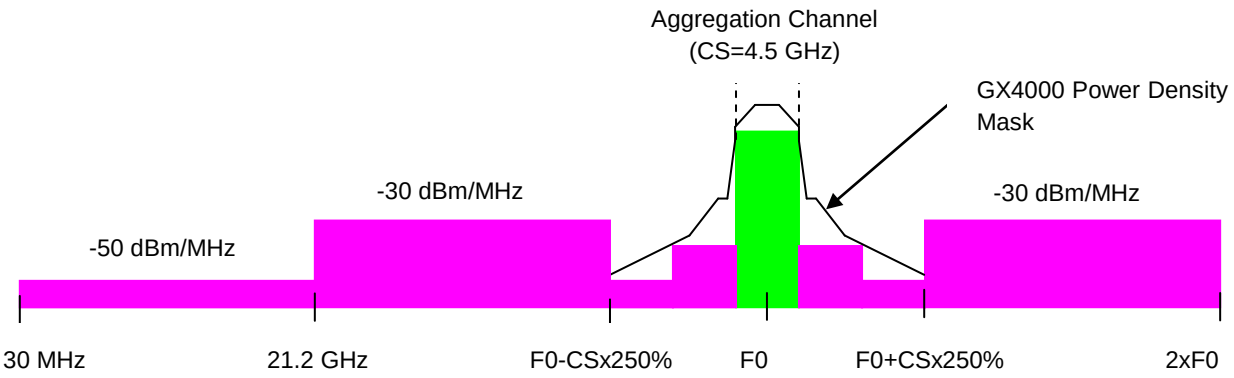

Parameter	Description	Remarks
CS	Aggregation channel spacing	4.5 GHz
F0	Equivalent RF center frequency	73.503 GHz (lower) 83.494 GHz (upper)
F0-CSx2.5	Edge of output power density mask	62.253 GHz (lower) 72.244 GHz (upper)
F0+CSx2.5	Edge of output power density mask	84.753 GHz (lower) 94.744 GHz (upper)
2 x F0	Second harmonic	147.0054 GHz (lower) 166.9886 GHz (upper)

TX spurious specification according to EN301 390 V1.2.1 (2003-11)

Spurious Range	Frequency Range	Specification
External	30 MHz to 21.2 GHz	<-50 dBm
	21.2 GHz to 2nd Harmonic	<-30 dBm

Figure 1.4-2c Spurious Emission - External at the Antenna port
(In accordance with ETSI EN 301 390-3 V1.2.1 (2003-11)

Receiver Side Specification

Table 1.4-3 Receiver Part

Item	Description
Noise Figure	11.5 dB typical 12 dB guaranteed Noise figure is measured at Point C (antenna port) in accordance with ETSI EN302 217-1 (2007-06) & at maximum gain of RF AMP.
RX RF Band	70/80 GHz band (E-band) in accordance with ETSI EN302 217-3 V1.3.1 (2009-07) Annex UC 70 GHz band: 71,125 to 75,625 MHz 80 GHz band: 81,125 to 85,625 MHz
RX Spurious Emission	<-10 dBm / MHz for out band emission frequency range <-13 dBm / MHz for spurious emission frequency range
Normal Received Power	–54 to –25 dBm at Point C and BER of 10^{-6}
AGC Dynamic Range	–56 to –25 dBm
Allowable TX-RX Interference Level	<-79 dBm when RSL is -54 dBm
RF Interference	In accordance with Table 1.4-3
RX Input VSWR	Less than 1.5 measured at antenna port
Alarm Function	(1) RX Block Failure (2) RSL Abnormal
Monitoring	(1) Analogue monitor for antenna orientation (0 to 3.3 V) (2) RSL monitor on WebLT (Level variation: +/- 3 dB) (3) Inner temperature monitoring (-33 to +85 degree)

Table 1.4-4 RF Interference Sensitivity

	Co-CH Interference		First Adjacent CH Interference		CW	Remarks
	1 dB deg.	3 dB deg.	1 dB deg.	3 dB deg.		
C/I	23	19	0	-4	-30	

Note: CW: > f_0 +/- CS x 250 %

Transmit-Receive Overall Performance

Table 1.4-5 BER Performance Overall

Item	Description
Upfade BER	BER = 10^{-6} at RSL of –25 dBm typical BER = 10^{-6} at RSL of –28 dBm guaranteed measured at antenna RF input port
Downfade BER	BER = 10^{-6} at RSL of –54 dBm typical BER = 10^{-6} at RSL of –50.7 dBm guaranteed measured at antenna RF input port
Residual BER	BER < 10^{-12} /hop/day at normal receiving condition (Typical) BER < 10^{-11} /hop/day at normal receiving condition (Guaranteed)

Signal Interface

Ethernet 10GbE Optical Interface

Table 1.4-6 10GBASE-LR Optical Interface

SFP Used	10G Gigabit Ethernet optical transceiver
Specification	IEEE802.3ae
Transmission Speed	10.3125 Gbit/s
Transmission Capacity	3,000 Mbit/s
Optical Fiber used	1.31 μ m single-mode fiber
Optical Fiber Wavelength	1.260 to 1.355 nm
Output Level (average)	-10.2 to +1.5 dBm on XFP using 5 m cable
Input Level (average)	-10.6 to +0.5 dBm on XFP using 5 m cable
Typical Reach	10 km (maximum)
Coding Method	64B/66B
Networking	Tag VLAN, Port VLAN
Synchronization	SyncE, not supported IEEE1588
1-hop, One-way Latency	< 60 μ sec excluding transmission path
Connector used	LC duplex

Ethernet 1GbE Electrical Interface

Table 1.4-7 1000BASE-T Electrical Interface

Specification	IEEE802.3-2008 (10/100/1000BASE-T)
Connector	RJ-45
Channel	1
Transfer speed	10 Mbit/s, 100 Mbit/s, 1,000 Mbit/s
Transmission capacity	10 Mbit/s, 100 Mbit/s, 1,000 Mbit/s
Cable used	CAT5 or higher
Typical reach	Less than 100 m
Transmission mode	Auto negotiation
MDI/MDI-X	Auto MDI-X

CPRI Optical Interface

Table 1.4-8 CPRI Optical Interface

Specification	CPRI specification V5.0 (2011-09-21), optical
Connector	SC connector, x1
Channel	1
Transmission speed	2,457.6 Mbit/s
Transmission capacity	2.457.6 Mbit/s
Optical Fiber used	1.31 μm zero dispersal type, single-mode fiber (SMF) 1.55 μm dispersal shift type, single-mode fiber (DSM)
Operation Wavelength	Up-stream (REC←RE): 1.275 to 1.355 nm Down-stream (REC→RE): 1.480 to 1.500 nm Transmit/receive wave division multiplex (WDM)
Output Level (average)	-8 to -2 dBm on XFP using 5 m cable
Input Level (average)	-17 to 0 dBm on XFP using 5 m cable
Typical Reach	20 km (maximum)
Coding Method	8B/10B
Synchronization	Slave Synchronization
1-hop, One-way Latency	< 20 μsec excluding propagation path

CPRI MMF Interface

Table 1.4-9 CPRI MMF Interface

Specification	CPRI specification V5.0 (2011-09-21), optical
Connector	LC duplex, 2xLC
Channel	1
Transmission speed	2,457.6 Mbit/s
Transmission capacity	2.457.6 Mbit/s
Optical Fiber used	850 nm multi-mode fiber
Operation Wavelength	840 to 860 nm
Output Level (average)	-8.2 to +0.5 dBm
Input Level (average)	-13.9 to 0 dBm
Typical Reach	20 km (maximum)
Coding Method	8B/10B
Synchronization	Slave Synchronization
1-hop, One-way Latency	< 15 μ sec excluding propagation path

Maintenance Interface

Table 1.4-10 Maintenance Interface for Ether

Item	GX4000 Ether	GX4000 CPRI
Local Maintenance	Web server, Supervision/Log management/Configuration setting/ User administration/File management	
EMS Access	SNMP V2c (MIB II and Private MIB)	
Connector	RJ-45	
No. of CH	1	
Transmission	10BASE-T and 100BASE-TX	
Cable	Category 5 UTP (Unshielded Twisted Pair)	
Transmission length	<100 m	
Transmission Mode	Auto-negotiation (10M full/100M full)	
MDI/MDI-X	Auto MDI-X	
Remote Contact Line	In-band (V-LAN) both Line and Radio sides	Not applicable for Line side RFCOH for Radio side
Housekeeping Item	Supervision x3 and Control x1	
Time Setting	Auto setting by NTP version 4 (Client) or manual setting	Manual setting by local maintenance application

Recommended L2SW Module Interface

Table 1.4-12a Line Side Interface of L2SW

Line Side Interface	1000BASE-LX, maximum x3 channels
Connector	LC duplex (LCx2)
Transmission Speed	1.25 Gbit/s
Transmission Capacity	1.25 Gbit/s
Optical Fiber Used	62.5 μm multi-mode fiber (MMF) 50 μm multi-mode fiber (MMF) 10 μm single-mode fiber (SMF)
Operation Wavelength	1,270 to 1,355 nm
Output Level (average)	MMF: -11.5 dBm SMF: -11.0 to -3.0 dBm
Input Level (average)	-19.0 to -3.0 dBm
Typical Reach	MMF: Maximum 500 m SMF: Maximum 10 km
Coding Method	8B/10B
Networking	Tag VLAN, Port VLAN, QoS(IEEE802.1p (COS)/ TOS(IP Precedence)/DSCP/ACL(IPv4, IPv6)
1-hop, One-way Latency	< 4 μsec, 64 byte frame in accordance with RFC2544

Table 1.4-12b Radio Side Interface of L2SW

Line Side Interface	10GBASE-LR, 1 channel
Connector	LC duplex (LCx2)
Transmission Speed	10.3125 Gbit/s
Transmission Capacity	10.3125 Gbit/s
Optical Fiber Used	1.31 μm single-mode fiber (SMF)
Operation Wavelength	1,260 to 1,355 nm
Output Level (average)	-8.2 to +0.5 dBm
Input Level (average)	-12.6 to +0.5 dBm
Typical Reach	Maximum 10 km
Coding Method	64B/66B
Networking	Tag VLAN, Port VLAN, QoS(IEEE802.1p (COS)/ TOS(IP Precedence)/DSCP/ACL(IPv4, IPv6)
1-hop, One-way Latency	< 4 μsec, 64 byte frame in accordance with RFC2544

Table 1.4-12c Other Specification of L2SW

Power Consumption	Less than 80 W
Dimension	441 x 388 x 44 mm
Weight	< 5.5 kg excluding fixing material to rack
Rack used	19-inch rack mounting as standard

Cassegrain Antenna

Table 1.4-11 Parabolic Antenna

	1-feet antenna	2-feet antenna
RF	71.0 to 76 GHz & 81.0 to 86.0 GHz	
Antenna Gain	43 dB (typical)	48 dB (typical)
Half Beam Width	1.0 degree (typical)	0.6 degree (typical)
VSWR	<1.5 (50-ohm)	
Polarization	Horizontal / Vertical	
Allowable input power	Maximum 1 W	
XPD (minimum)	>27 dB	
F/B Discrimination	>60 dB	>65 dB
Antenna Diameter	30 cm	60 cm
Side Lobe Suppression	ETSI EN302 217-4-2 V1.5.1 class 3	
Antenna angle range	Vertical: +/- 30 degree, Horizontal: +/- 7 degree	
Weight including fixing materials to pole	<10 kg	<14 kg

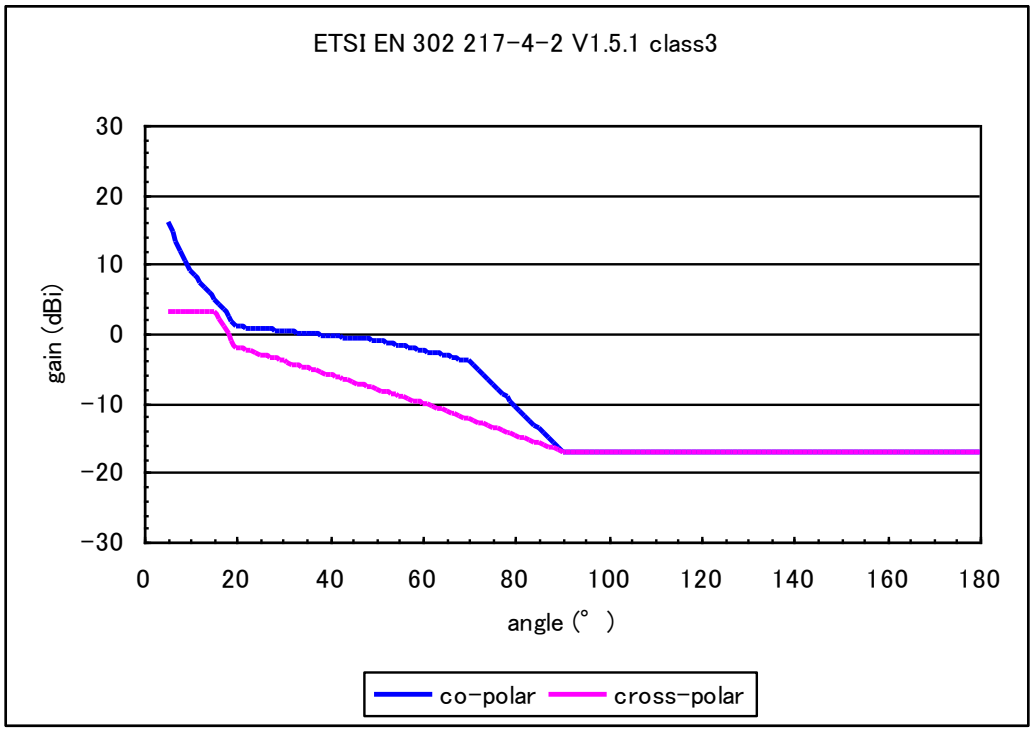

	Gain (dBi)								
Angle	5	10	15	20	50	60	70	90	180
Co-pol.	16	9	-	1	-1	-	-4	-17	-17
X-pol.	3	3	3	-2	-	-10	-	-17	-17

Figure 1.4-3 ETSI EN302 217-4-2 V1.5.1 Class 3

1.5 Environmental Specification

Environmental Condition

Not In-Use Condition (Storage/Transportation)

Table 1.5-1 shows the storage/Transportation conditions when E-band radio equipment and base band conversion module are not operational. (Not in-use condition).

Table 1.5-1a Environmental Condition - Storage -

Item		Description
Storage	Classification	In accordance with ETSI EN 300 019-1-1 V2.1.4 (2003-04) Class 1.3: Non-weatherprotected storage locations
	Specification	In accordance with ETSI EN 300 019-2-1 V2.1.2 (2000-09) Specification T1.3: Non-weatherprotected storage locations
	Altitude	Up to 3,000 m
Transportation	Classification	In accordance with ETSI EN 300 019-1-2 V2.1.4 (2003-04) Class 2.3: Public transportation
	Specification	In accordance with ETSI EN 300 019-2-2 V2.1.2 (1999-09) Specification T2.3: Public transportation
	Altitude	Up to 10,000 m

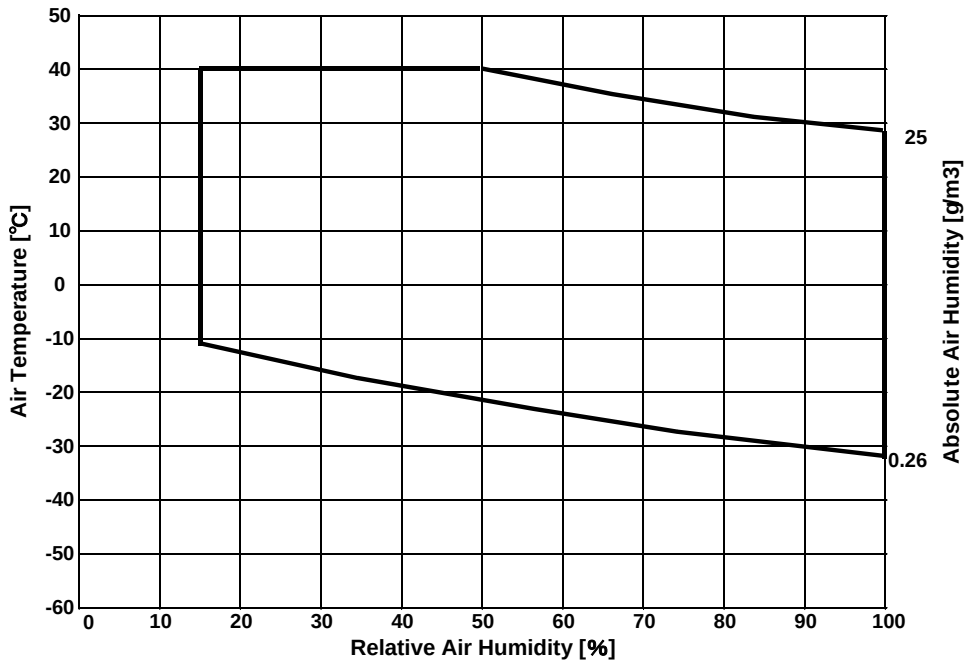

Figure 1.5-1 Climatogram for class 1.3: Not weatherprotected storage locations

In-Use Condition

Table 1.5-2 shows the environmental conditions when GX4000 equipment is operational. (In-use condition).

Table 1.5-2 Environmental Condition - In-Use condition -

Item		Description
Out-door use	Classification	In accordance with ETSI EN 300 019-1-4 V2.1.2 (2003-04) Class 4.1: Non-weatherprotected locations and Class 4.2H: Non-weatherprotected locations – extremely warm dry
	Specification	In accordance with ETSI EN 300 019-2-4 V2.2.2 (2003-04) Specification T4.1: Non-weatherprotected locations and Specification T4.2H: Non-weatherprotected locations – extremely warm dry
	Altitude	Up to 3,000 m

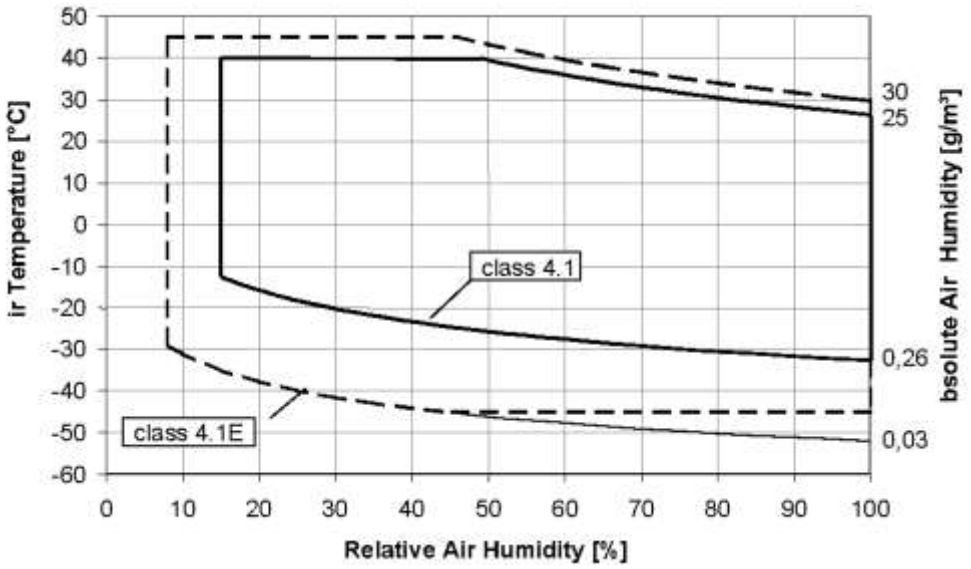

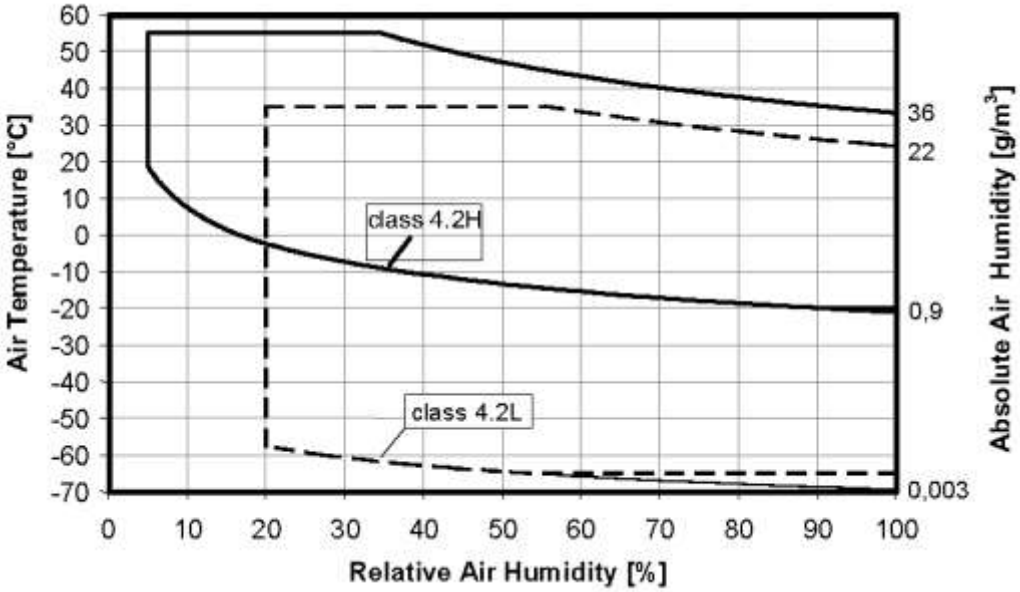

Figure 1.5-2 Climatogram for class 4.1 & 4.2H: Non-weatherprotected locations

Electro-Magnetic Compatibility

EMC requirements are in accordance with ETSI EN 301 489-1 V1.8.1 (2008-04) and ETSI EN 301 489-4 V1.4.1 (2009-05). Table 1.5-3 shows the EMC emission test method and limits

Table 1.5-3 EMC Emission Test Method and Limits

Phenomenon	Application	Requirement
Radiated emission	Enclosure of ancillary equipment	Test method is in accordance with CENELEC EN 55016-2-3 (2006): (1) Class B limits given in EN 55022 (2006), measured on a stand alone at a measurement distance of 10 m 30 dB μ V/m for 30 MHz to 230 MHz 37 dB μ V/m for 230 MHz to 1,000 MHz (2) Limits above 1 GHz, measured on a stand alone basis at a measurement distance of 3 m Average limit 50 dB μ V/m for 1,000 MHz to 3,000 MHz 54 dB μ V/m for 3,000 MHz to 6,000 MHz Peak limit 70 dB μ V/m for 1,000 MHz to 3,000 MHz 74 dB μ V/m for 3,000 MHz to 6,000 MHz
Conducted emission	DC power input/output ports	Test method is in accordance with CENELEC EN 55022 (2006): Limits (Quasi-peak): 66 - 56 dB μ V for 0.15 MHz to 0.5 MHz (*1) 56 dB μ V for > 0.5 MHz to 5 MHz 60 dB μ V for > 5 MHz to 30 MHz Limits (Average): 56 - 46 dB μ V for 0.15 MHz to 0.5 MHz (*1) 46 dB μ V for > 0.5 MHz to 5 MHz 50 dB μ V for > 5 MHz to 30 MHz
Conducted emission	Telecommunication port	Test method is in accordance with CENELEC EN 55022 (2006), class B: Class B limits given in EN 55022 (2006) Voltage Limits (Quasi-peak) 84 to 74 dB μ V for 0.15 MHz to 0.5 MHz 74 dB μ V for 0.5 MHz to 30 MHz Voltage Limits (Average): 74 to 64 dB μ V for 0.15 MHz to 0.5 MHz 64 dB μ V for 0.5 MHz to 30 MHz Current Limits (Quasi-peak) 40 to 30 dB μ A for 0.15 MHz to 0.5 MHz 30 dB μ A for 0.5 MHz to 30 MHz Current Limits (Average): 30 to 20 dB μ A for 0.15 MHz to 0.5 MHz 20 dB μ A for 0.5 MHz to 30 MHz

Note-*1: The limit decreases linearly with the logarithm of the frequency in the range of 0.15 MHz to 0.50 MHz.

Immunity

Table 1.5-6 shows the Immunity test methods and conditions.

Table 1.5-6 Immunity Test Method and Conditions

Phenomenon	Application	Requirement
RF electromagnetic field 80 to 1,000 MHz and 1,400 to 2,700 MHz	Enclosure	a) Test method is in accordance with EN 61000-4-3 (2006) b) Test level is 3 V/m (measured unmodulated). Test signal shall be AM'ed to a depth of 80% by a sinusoidal audio signal of 1,000 MHz. c) Test shall be performed over the frequency range 80 MHz to 1,000 MHz and 1,400 MHz to 2,700 MHz Result: EUT operates without any recorded errors in main signal during the test.
Electrostatic discharge	Enclosure	a) Test method is in accordance with EN 61000-4-2 (2001) b) Test severity level for contact discharge shall be 4 kV & for air discharge 8 kV. All other details, including intermediate test levels, are contained within EN 61000-4-2 (2001). c) Electrostatic discharges shall be applied to all exposed surfaces of the EUT. Result: EUT operates without any recorded errors in main signal during the test.
Fast transients common mode	Signal, telecommunication and control ports, DC power ports	a) Test method is in accordance with EN 61000-4-4 (2004) b) Test level for signal ports, telecommunication ports and control ports shall be 0.5 kV open circuit voltage at a repetition rate of 5 kHz as given in EN61000-4–4 (2004). c) Test level for DC power inputs shall be 0.5 kV open circuit voltage as given NE61000-4-4 (2004). Result: EUT operates without any recorded errors in main signal during the test.
RF common mode 0.15 to 80 MHz	Signal, telecommunication and control ports, DC power ports	a) Test method is in accordance with EN 61000-4-6 (2005) b) Test level shall be severity level 2 as given in EN61000-4-6 (2005) corresponding to 3 Vrms unmodulated. Test signal shall be amplitude modulated to a depth of 80% by a sinusoidal audio signal of 1,000 Hz. c) Test shall be performed over 150 kHz to 80 MHz. d) The stepped frequency increments shall be 1 % of frequency increment of the momentary frequency in the frequency range 150 kHz to 80 MHz. Result: EUT operates without any recorded errors in main signal during the test.
Surges line to line and line to ground	Telecommunication ports	a) Test method is in accordance with EN 61000-4-5 (2006) b) Test level telecommunication ports, intended to be directly connected to the communication network via outdoor cables shall be 1 kV line to ground. c) Test level for telecommunication ports, intended to be connected to indoor cables (> 10m) shall be 2 kV line to line. d) Test generator shall provide the 1.2/50 μ s pulse Result: EUT operates without any recorded errors in main signal during the test.

Safety

GX4000 System equipment is well designed to meet the Safety Requirement in accordance with Cenelec EN 60950-1: 2006 (IEC 60950-1:2005 (Second Edition) as follows;

Item	Principles of Safety
General principles of Safety	To design safe equipment, priority design measures are to; (1) specify design criteria to eliminate, reduce or guard against hazards; (2) specify the use of protective means independent of the equipment; (3) specify the provision of markings and instructions regarding the residual risks.
Hazards	Well designed to reduce the risk of injury or damage due to; (1) electric shock; (2) energy related hazards; (3) fire; (4) heat related hazards; (5) mechanical hazards; (6) radiation; (7) chemical hazards;
Materials and components	Materials and components used are; (1) so selected and arranged in a reliable manner for the anticipated life of the equipment without creating a hazard and would not contribute significantly to the development of a serious fire hazard. (2) Components are within ratings under normal conditions and do not create a hazard under fault conditions

Waste Directive Compliance

Regarding the directive of waste from communication equipment, E-band radio system is compliant with European Union's RoHS and WEEE directives.

Directive	Description
RoHS-06 (*1)	Restriction of the use of certain Hazardous Substances in electrical and electronic equipment (EC 95)
WEEE	Waste from Electrical and Electronic Equipment (EC 95)

Note-*1: 2011/65/EU (RoHS2) directive is complied.

MTBF

Unit	FITS (calculated)	MTBF k-hour (calculated)	MTBF year (calculated)
GX4000, 70/80G Ether	1,040	962	>30
GX4000, 70/80G CPRI	1,040	962	>30
1/2-feet Antenna	30	-	>30

Note-1: Actual MTBF value is estimated 3 to 5 times better than calculated one from the field data of Fujitsu digital microwave radio.

1.6 Power Requirements

Power Supply Interface Requirement

DC -48 V Power Feed

Table 1.6-1 shows the power supply interface requirement in accordance with ETSI EN300 132-2 V2.2.2 (2007-10) below;

Table 1.6-1 Power Supply Requirement at Interface "A"

Item	Specification
(1) Nominal voltage	-48 Vdc with positive grounded Note*: The voltage of interface "A" will be complemented by a 24 cell lead-acid battery.
(2) Normal service voltage range	-40.5 Vdc to –57.0 Vdc
(3) Abnormal service voltage range	(a) Abnormal service voltage under steady-state condition GX4000 will not suffer any damage when subjected to the following voltage ranges; 0.0 to –40.5 Vdc and –57 to –60 Vdc
	(b) Recovery from steady state abnormal voltage Following the restoration to the normal voltage range, GX4000 will automatically restore service and resume operation according to its specification. And the abnormal voltage shall not lead to the disconnection of the power supply by causing circuit breakers & so on.
	(c) Voltage Transients caused by power distribution system GX4000 will not be damaged under the test model in accordance with EN61000-4-5.
	(d) Recovery from voltage transients GX4000 will continue to function within its operational specification without requiring manual intervention.
(4) Voltage change due to the regulation of the power supply	For the single rate of the voltage at interface "A" with an amplitude of 6V± 10% for both the fall and rise time of the voltage and a change rate within the range 3 V/ms to 7 V/ms, GX4000 shall operate according to the specification and no loss of data or false alarm shall occur.

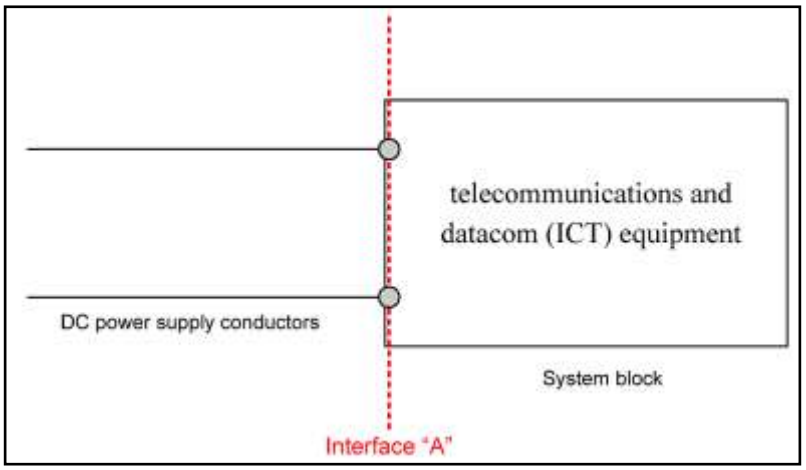

Table 1.6-1 Power Supply Requirement at Interface "A" (Cont'd)

Item	Specification
(5) Supply protection	The supply at interface "A" shall be protected by circuit breaker or other such devices. Circuit breaker is installed outside GX4000.
(6) Maximum current drain following abnormal service	Maximum current drain at any voltage in the normal and abnormal voltage range at interface "A" lasting for longer than 1 second shall not exceed 1.5 times the maximum continuous current drain at normal working voltage of -48 Vdc.
(7) Inrush current	In accordance with Figure 3, ETSI EN300 132-2 V2.2.1 (2007-05)
(8) Immunity to narrowband noise	In accordance with Table 1 and Figure 5, ETSI EN300 132-2 V2.2.1 (2007-05)
(9) Emissions of narrowband noise	In accordance with Table 2 and Figure 7, ETSI EN300 132-2 V2.2.1 (2007-05)

- I_i inrush current (magnitude of instantaneous value);
- I_m maximum continuous input current for a fully-equipped equipment under test connected to interface "A", at nominal voltage.

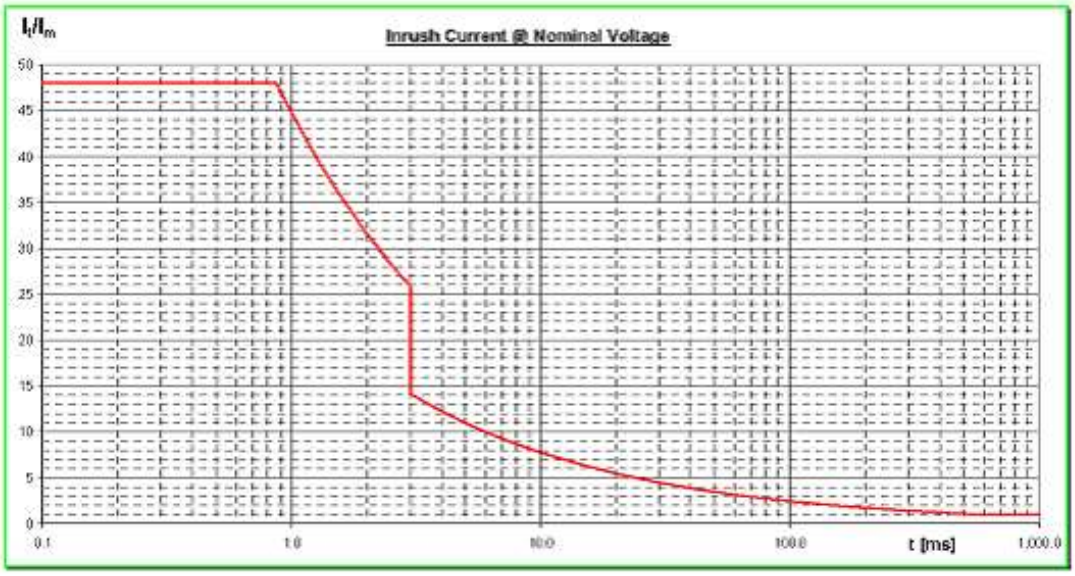

Figure 3: Maximum inrush current characteristics for telecommunications equipment at nominal voltage and maximum load

Inrush Current Specification

Table 1

Frequency range	Resolution bandwidth
25 Hz to 10 kHz	10 Hz

Table 2

Frequency range	Resolution bandwidth
25 Hz to 10 kHz	10 Hz
> 10 kHz to 20 kHz	200 Hz or 300 Hz

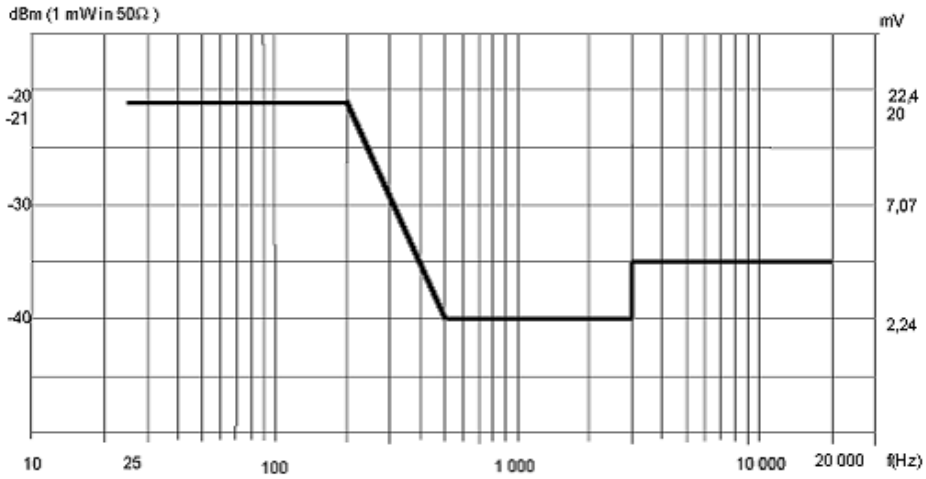

Figure 7: Maximum levels of narrowband noise

Immunity to narrow band Specification

Emission of narrowband noise Specification

AC 240 V Power Feed

Table 1.6-2 shows the power supply interface requirement in accordance with ETSI ETS 132-1 (September 1996) below;

Table 1.6-2 Power Supply Requirement at Interface "A"

Item	Specification
(1) Nominal voltage	230 Vac at interface "A".
(2) Normal service voltage range	207 to 253 Vac
(3) Abnormal service voltage range	(a) Abnormal service voltage under steady-state condition GX4000 will not suffer any damage when subjected to the following voltage ranges; 0.0 to 207 Vac and frequency tolerance: 45 to 55 Hz
	(b) Recovery from steady state abnormal voltage Following the restoration to the normal voltage range, GX4000 will automatically restore service and resume operation according to its specification. And the abnormal voltage shall not lead to the disconnection of the power supply by causing circuit breakers & so on.

	(c) Abnormal service voltage under temporary conditions Abnormal service voltage under temporary conditions and surge testing simulating these temporary conditions are covered by ETS 300 386-1.
	(d) Recovery from steady state abnormal voltage Abnormal service voltage shall not lead to the disconnection of power supply units e.g. by causing circuit breakers, fuses or other such devices to operate.
(4) Abnormal service voltage under temporary conditions	Abnormal service voltage under temporary conditions and surge testing simulating these temporary conditions are covered by ETS 300 386-1.
(5) Voltage changes due to the regulation of secondary voltage	(a) Voltage interruption of the ac power supply Where automatic switching is used to maintain continuity, short interruption and fluctuation of the voltage measured at interface “A” may occur. GX4000 shall continue to function correctly when the duration of the interruption is less than or equal to 20 ms at normal supply voltage.
(6) Slow voltage fluctuations	GX4000 shall continue to function correctly in accordance with its specification within the envelope of the voltage fluctuations shown below: (a) Static tolerance: +/- 10 % (b) for <500 ms with respect to the rms value: +/- 15% (c) for < 2 ms with respect to actual value: +/- 40%
(7) Supply protection at interface “A”	The supply to interface “A” shall be protected by circuit breakers.
(8) Surge current on connection of interface “A”	The ratio of the instantaneous surge current It to maximum current Im at interface “A”, under any random sequence of switching operations, shall not exceed the limit shown in Figure 1.6-2.
(9) Electrical safety requirement	Safety requirement at interface “A” and 230Vac is in accordance with EN60950 as for hazardous voltage.
(10) EMC requirement	In accordance with ETS 300 386-1.

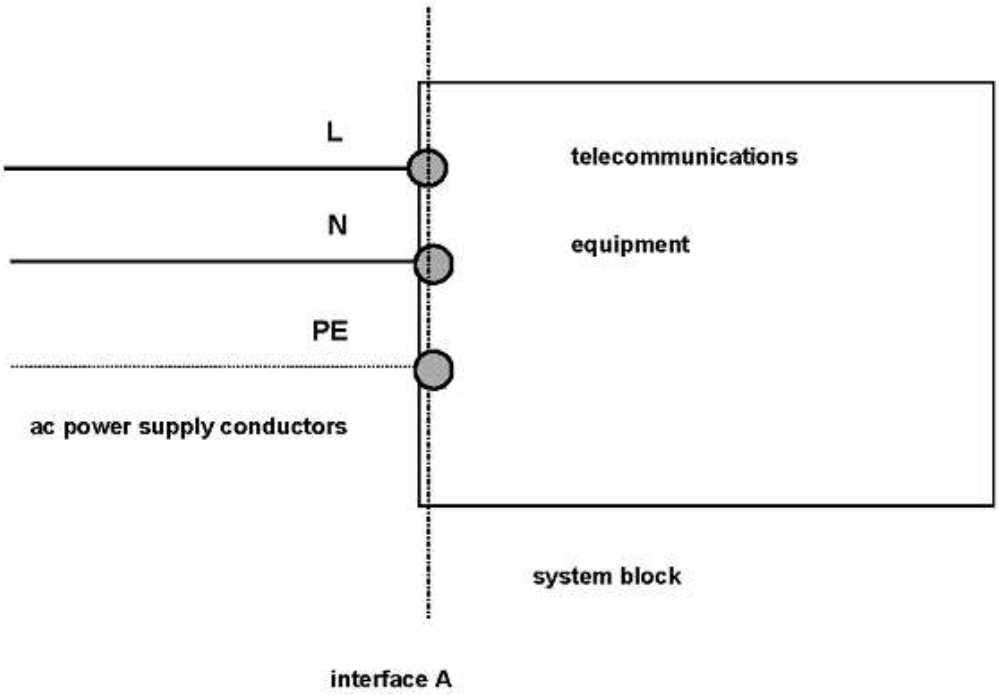

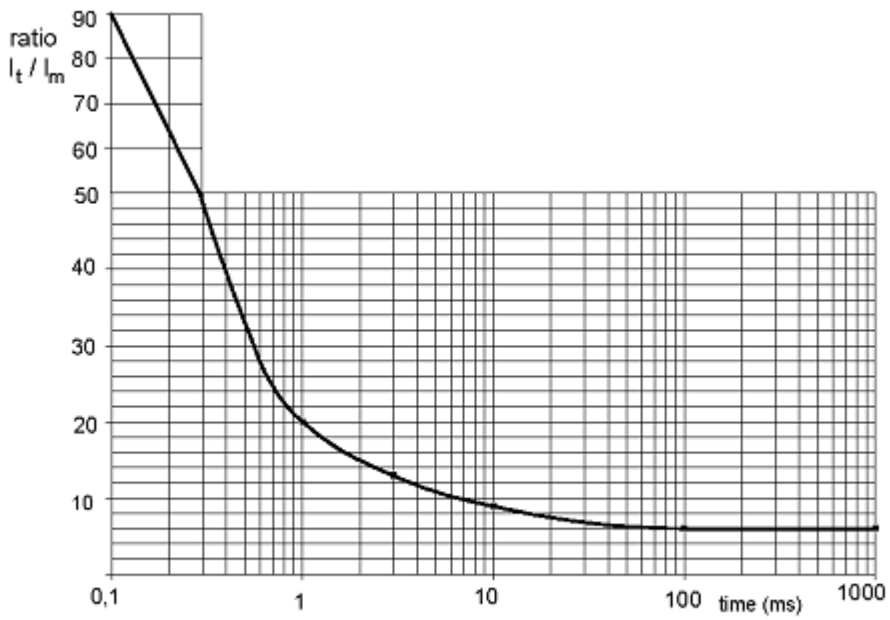

Figure 2: Maximum inrush current characteristics for telecommunications equipment

Power Consumption

The power consumption of each unit is shown in Table 1.6-3.

Table 1.6-3 Power Consumption of Each Equipment

No.	Unit	Pc (W)	Remarks
1	GX4000 Ether 70G	25	
2	GX4000 Ether 80G	25	
3	GX4000 CPRI BBU 70G	25	
4	GX4000 CPRI RRH 80G	25	
5	GX4000 MMF 70G	25	
6	GX4000 MMF 80G	25	

Note-1: Power consumption includes the efficiency of power supply unit。
Note-2: Above figures is typical value. Guaranteed value is +10% up including environmental conditions and primary power voltage variance within –40.5 to –57 V.
Note-3: Power consumption value for ODU is quoted when set ATPC to ON.

1.7 Reference Data

GX4000 Link Throughput

The measurement result of GX4000 Link Throughput by RFC2544 standard is shown as follows.

Test Set Setup

Termination	10GigE LAN Layer 2 Traffic Term
Flow Control	Off
Traffic Mode	Traffic
Framing	DIX
Encapsulation	None
Source Address	00:80:16:8A:6B:96
Destination Address	00:80:16:8A:6B:49

Test Configuration

Tests to Run	Throughput Frame Loss Rate
Maximum Test Bandwidth	3500.0 L1 Mbps
Frame Lengths	64, 128, 256, 512, 1024, 1280, 1518
Bandwidth Measurement Accuracy	To within 100.0 (Mbps)
Throughput Zeroing-in Process	RFC 2544 Standard
Throughput Frame Loss Tolerance	15.000% NOTE: A setting > 0.00 does NOT COMPLY with RFC2544
Throughput Trial Duration	60 seconds
Throughput Pass Threshold	Not Selected
Frame Loss Test Procedure	RFC 2544
Frame Loss Trial Duration	25 seconds
Frame Loss Bandwidth Granularity	100 Mbps

Throughput Test Results:

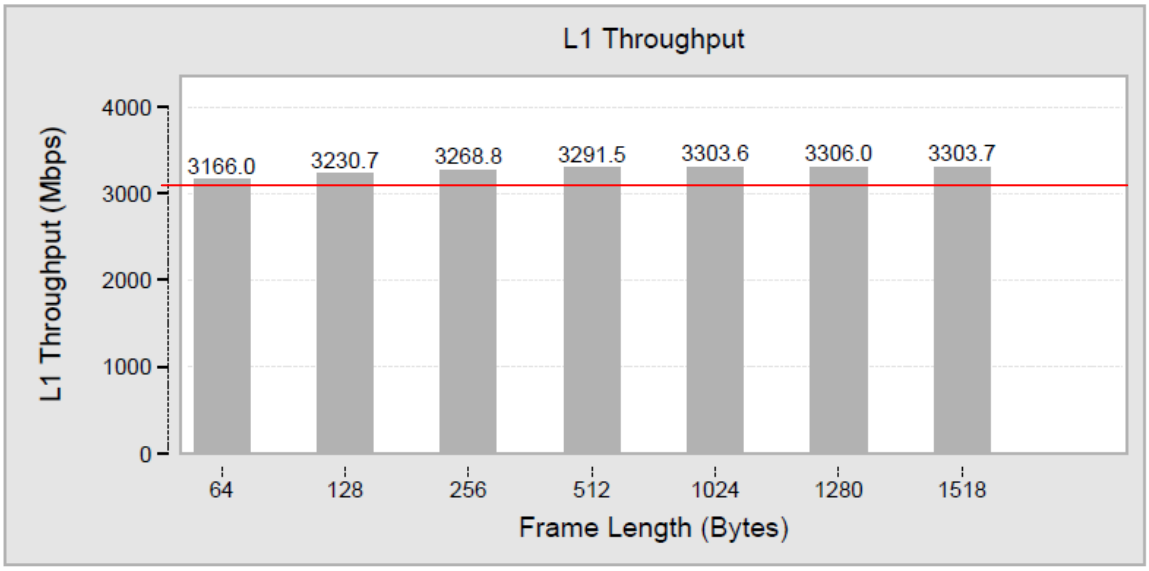

GX4000 **R3.0** product / Max Test BW 3500 L1 Mbps / Indoor RF connection (Layer 2 Traffic Term mode)

Test Set Setup

Termination	10GigE LAN Layer 3 Traffic Term
Flow Control	On
Data Mode	IPoE
Framing	DIX
Encapsulation	None
Source Address	00:80:16:8A:6B:96
Destination Address	00:80:16:8A:6B:49
TOS	000000

Test Configuration

Tests to Run	Throughput Frame Loss Rate
Maximum Test Bandwidth	3500.0 L1 Mbps
Packet Lengths	40, 64, 128, 256, 512, 1024, 1500
Bandwidth Measurement Accuracy	To within 100.0 (Mbps)
Throughput Zeroing-in Process	RFC 2544 Standard
Throughput Frame Loss Tolerance	15.000% NOTE: A setting > 0.00 does NOT COMPLY with RFC2544
Throughput Trial Duration	60 seconds
Throughput Pass Threshold	Not Selected
Frame Loss Test Procedure	RFC 2544
Frame Loss Trial Duration	25 seconds
Frame Loss Bandwidth Granularity	100 Mbps

Throughput Test Results:

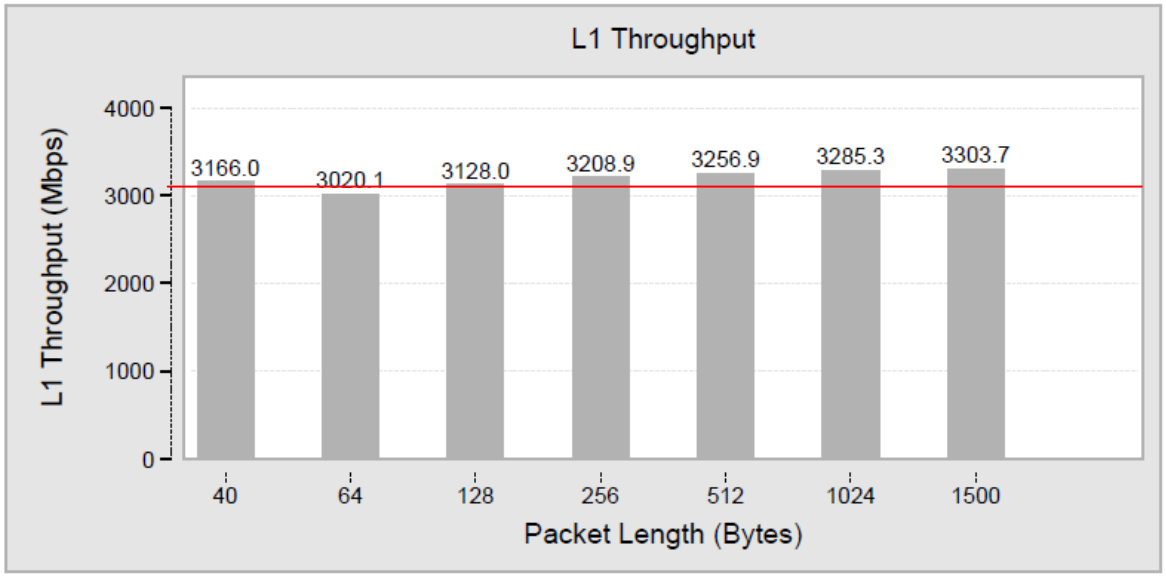

GX4000 **R3.0** product / Max Test BW 3500 L1 Mbps / Indoor RF connection (Layer 3 Traffic Term mode)

2 Installation & Site Survey

2.1 Overview

This chapter describes how to install and do the site survey for BroadOne GX4000 E-band IR system. The main topics covered are;

- Installation & Site Survey Guideline
- Unpacking the equipment
- Preparation of Circuit Breaker for ODU
- Antenna fixing to pole
- ODU Installation
- Cable connection between ODU and external equipment

2.2 Installation & Site Survey Guideline

WARNING

THE GX4000 EQUIPMENT MUST BE INSTALLED BY SUITABLY QUALIFIED SERVICE PERSONAL.

THE EQUIPMENT CAN ONLY BE INSTALLED IN A RESTRICTED ACCESS LOCATION

To ensure the efficiency of an installation, a proper site survey should be conducted. Prior to start of an installation, an approved survey team should conduct a survey of the proposed sites. The team should be approved by the customer and may consist of either contracted surveyors or employees or both.

Tools Required

The survey team will need:

- A pair of Binoculars
- Spotting Scope
- GPS Navigation Device
- Site Survey Report Form
- Equipment Requisition Form
- Measure Tape

Line of Sight (LOS)

The 70/80 GHz antenna half beam width is very narrow (less than 1 degree). This reduces the clearance required between the direct path between sites A and B and buildings alongside the radio path. The required clearance from obstacles is called a Fresnel zone.

Fresnel zones are a series of concentric ellipsoid areas surrounding the straight line path between two antennas.

The first Fresnel zone is the area containing every point of which the distance from the transmitter to any reflection point on the area and on to the receiver is half a wavelength longer than the path of the direct signal.

The radius of the Fresnel zone is greatest at midpoint in the signal path. The required clearance of obstacles at this point is therefore higher than at any other point on the signal path.

The minimum required clearance is 0.6 of the first Fresnel zone.

Determining of LOS

The LOS should be clear and unimpeded for maximum efficiency in signal transmission and reception.

Determining Latitude and Longitude

Identification of the exact latitude and longitude of each site location is required. This information is used in determining the distance between sites and the expected Receive Signal Level (RSL).

The measurements are performed using a Global Positioning System (GPS) Navigation Device, which is placed near the proposed location of the antenna. When the GPS device is activated, latitude and longitude readings transmitted from an overhead satellite will be recorded for at least 15 minutes

Selecting a Antenna Location

The Site Survey team will determine the optimum location for the antenna. This should provide for ease of erecting and mounting the antenna as well as unimpeded LOS to the next site. Factors that need to be taken into account include:

- Loading weight for the roof
- Roof type (tar, cement, gravel, etc.)
- Proximity to the edge of the roof
- Local or Building ordinances prohibiting visibility of antennas
- Length of cable runs
- Grounding Connection Points
- Obstructions
- Accessibility

Grounding

CAUTION: Proper grounding of the antenna mounting provides protection from lightning and reduces the risk of electrical shock. The Site Survey Team will determine the source and connection points for the building–to–earth ground in the vicinity of the antenna. Efficient grounding of the antenna reduces electromagnetic interference to the operation of ODU and protects against electrical discharges

Antenna Mounting Type

The Site Survey Team will assess and report on any existing tower or antenna framework that may be usable.

In the case of a rooftop location, a standard non–penetrating mounting with a 1.8 m antenna pole is standard. Non–penetrating mounts require concrete building blocks to prevent movement which might affect the alignment of the antennas.

The Site Survey team may determine that a wall–mounted antenna provides the optimum LOS.

Cable Feed and Others

The Site Survey Team will also identify the best place for the ODU and optional IDU (L2SW module). Factors that need to be considered include:

- Accessibility - For installation and maintenance purposes, optional IDU is installed to 19-inch rack and should be readily accessible from both the front and the rear.
- Environment - Optional IDU is designed to operate in temperatures ranging from –33 ℃ to +55 ℃, and in relative humidity of 95% non–condensing.
- Cables - The Site Survey Team will determine the path for the optical fiber cable, power supply/alarm cable and LAN cable(s).

In the case of a rooftop installation, the Site Survey Team will locate any available portal conduit to the roof. If none is available, the Site Survey Team will prepare a recommendation and include it in the report.

The Site Survey Team will determine the proposed length of the above cables between ODU/IDU and external equipment. A further 10% of this measurement is required to allow for service loops and contingencies.

- Power Supply - The Site Survey Team will determine the location and availability of a power source. The E-Band ODU radio is designed to operate with a DC power supply from –40.5 to –57 Vdc or AC power supply is designed to operate 100 to 240 Vac. A dedicated wall outlet is required.

NOTICE: Circuit breaker for ODU is needed outside radio equipment provided by customer.

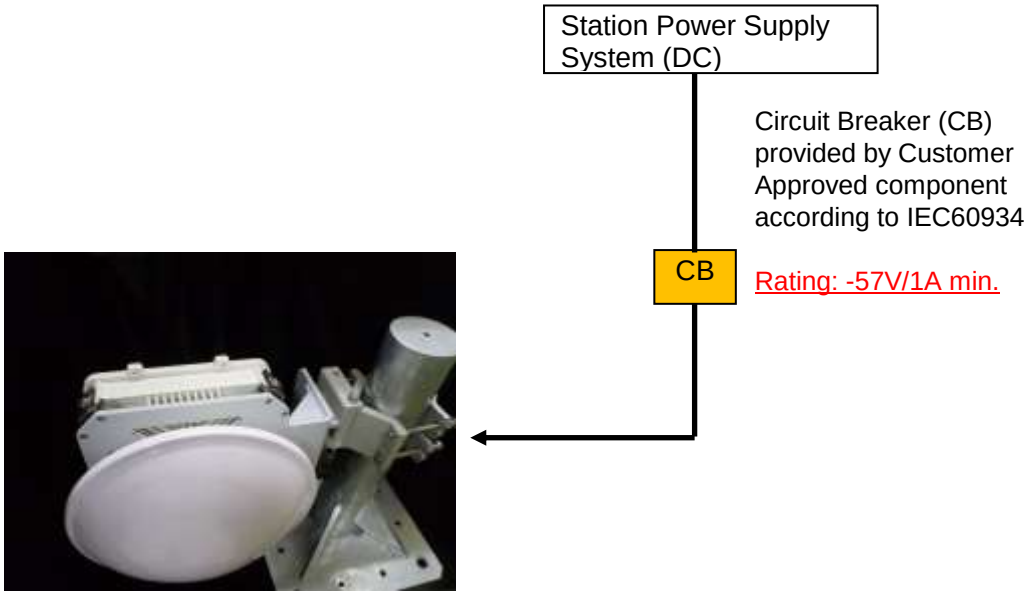

Power Supply Feed through Circuit Breaker in case of DC Power Feed

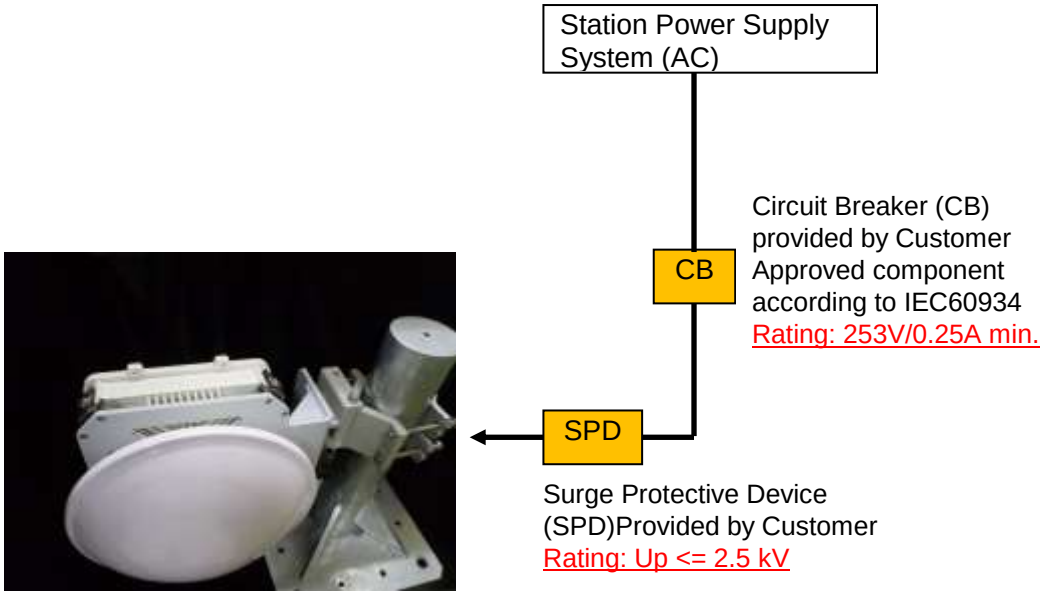

Power Supply Feed through Circuit Breaker in case of AC Power Feed

2.3 Unpacking

Verify that the item received are compliant with the packing list.

If any part of the equipment is damaged, contact Fujitsu Limited representative for repair or replacement instruction.

The ODU is packaged in two (2) separate boxes. In addition, the optional items such as cables are packaged in a separate container.

2.4 Antenna Pole Mounting

Two types of parabolic antenna with 1-feet (30 cm) or 2-feet (60 cm) diameters with antenna adapter are available.

- Integrated antenna with ODU interface (1-feet or 2-feet diameter). With these antennas, ODU is directly attached on the antenna.

2.4.1 Antenna Pole Mounting Overview

ODU and parabolic antenna is mounted on tubular self-supported pole having diameter of 60.5 mm x 1,750 mm height.

If ODU with antenna is installed on tower using another type of structure (e.g., square-section tower), special installation kits must be used for this support.

CAUTION: For ODU with antenna mounting, following precautions must always be taken:

- Allow enough clearance (± 10°) about the alignment axis. Leave also adequate space around the ODU with antenna to allow easy mounting;
- Make sure that nothing may obstruct the radio path, even partially or especially in the line of sight;
- Keep enough room for access to the ODU with antenna for commissioning test and maintenance test;
- Install proper lightning rod and ground earthling;

CAUTION: If there is an existing lightning rod, make sure that the ODU installation site is covered by the lightning protection cone.

- Misalignment under extreme weather conditions must not exceed ± 2 min. angle in elevation and azimuth;

The antenna mount may be secured in different ways depending on the antenna installation site type and environment:

- Mounting pole secured to the HEA section with a back-plate or clips;
- Mounting pole secured to a square-shaped base plate with threaded rods. The base plate is set on top of a resilient plate which may be installed on the terrace of a building without affecting water-tightness;
- Wall-mounted staff on the building front;
- Antenna mount secured directly to a tower tube (diameter 88.9 or 114 mm);
- Antenna support secured to a square-section tower tube with adapters;

NOTICE: There are protection cap on ODU for antenna waveguide port, optical fiber cable, LAN cable and DC/AC power supply/Alarm cables. DO NOT remove these caps before commencement of commissioning test.

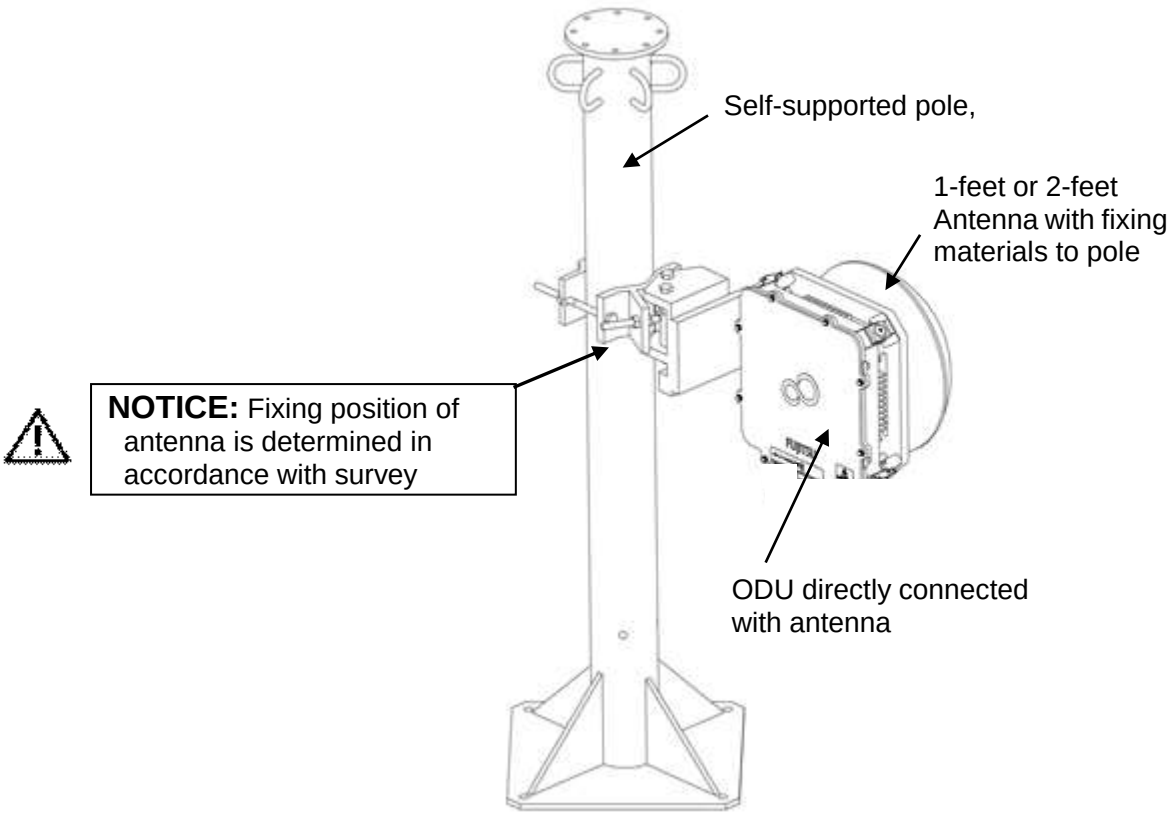

Figure 2.4.1 Antenna Pole Mount

2.4.2 Goods Necessary for Installation

Table 2.4.2a Goods Necessary for Installation per Station

Item	Goods	Code	Quantity	Remarks
1	GX4000	GX4380 (*1)(*2)(*3)	1	(*1): Radio frequency L: TX=70GHz/RX=80GHz U: TX=80 GHz/RX=70 GHz (*2): User interface E: Ethernet, 2xSMF B: CPRI BBU, 1xSMF R: CPRI RRH, 1xSMF C: CPRI MMF, 2-MMF (*3): Power supply voltage D: DC -48 V A: AC 100 to 240 V
2	Cassegrain Antenna	GX4K80ATP1(*4)	1	(*4): Diameter 1: 1-feet 2: 2-feet
3	Power Cable and/or Connector	GX4K80CBP(*3)(*5) and/or GX4K80CNP(*3)	1	(*5): Cable length 01 to 90: 1 m to 90 m 99: 100 m Power cable is provided by the customer
4	Ether Cable	GX4K80CBET(*6)	1	(*6): Cable length, same as (*5)

Table 2.4.2a Goods Necessary for Installation per Station (Cont'd)

Item	Goods	Code	Quantity	Remarks
5	I/O Cable and/or I/O connector	GX4K80CBAL(*5) and/or GX4K80CNHK	(1)	Only when SV/CONT is needed. Cable is provided by the customer.
6	Optical Fiber Cable	GX4K80CB(*7)(*5)	1	(*7): Fiber mode 1S: 1xSingle-Mode Fiber 2S: 2xSingle-Mode Fiber 2M: 2xMulti-Mode Fiber
7	Crimping Terminal for Frame grounding	GX4K80CBFG	1	
8	Mounting kit		1	
9	Connection material		1	

Table 2.4.2b Tool and Jig for Installation per Station

Item	Goods	Remarks
1	1/2-inch wrench	Antenna installation and orientation
2	9/16-inch wrench	Connection with connection material and antenna
3	Plus driver	Connection with GX4000 and connection material & adjustment of antenna polarization

Table 2.4.2c Optional Materials for Installation per Station

Item	Goods	Code	Remarks
1	Installation kit	GX4K80MNEAP	Paper base
2	Installation kit	GX4K80MNEAC	Software base
3	Monitor Cable	GX4K80CBMT	RSL monitoring

2.4.3 Mechanical Dimension of Goods

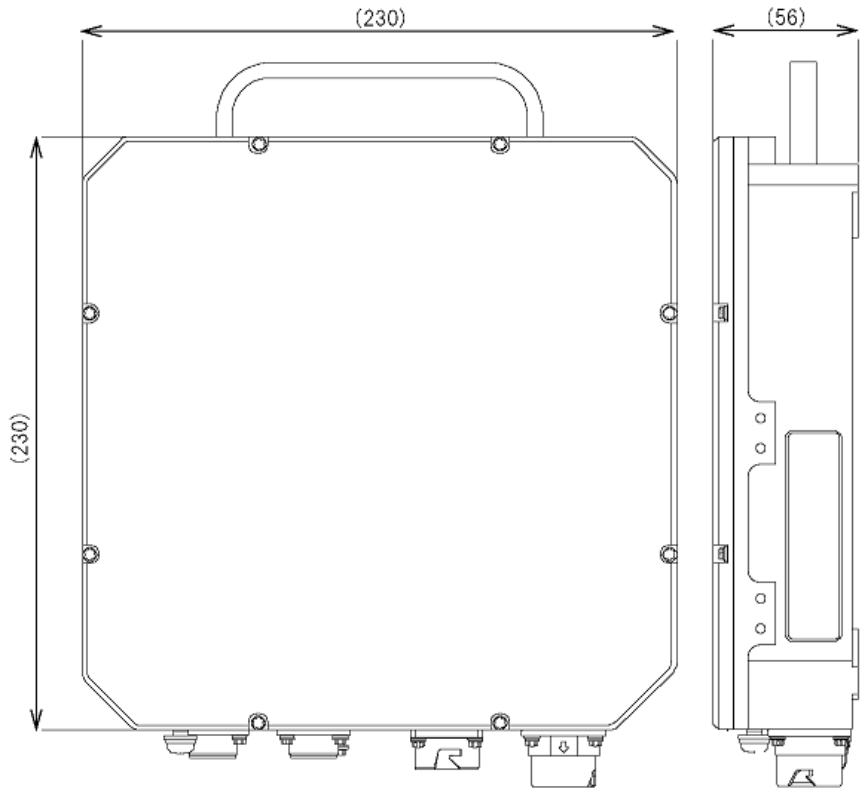

GX4000

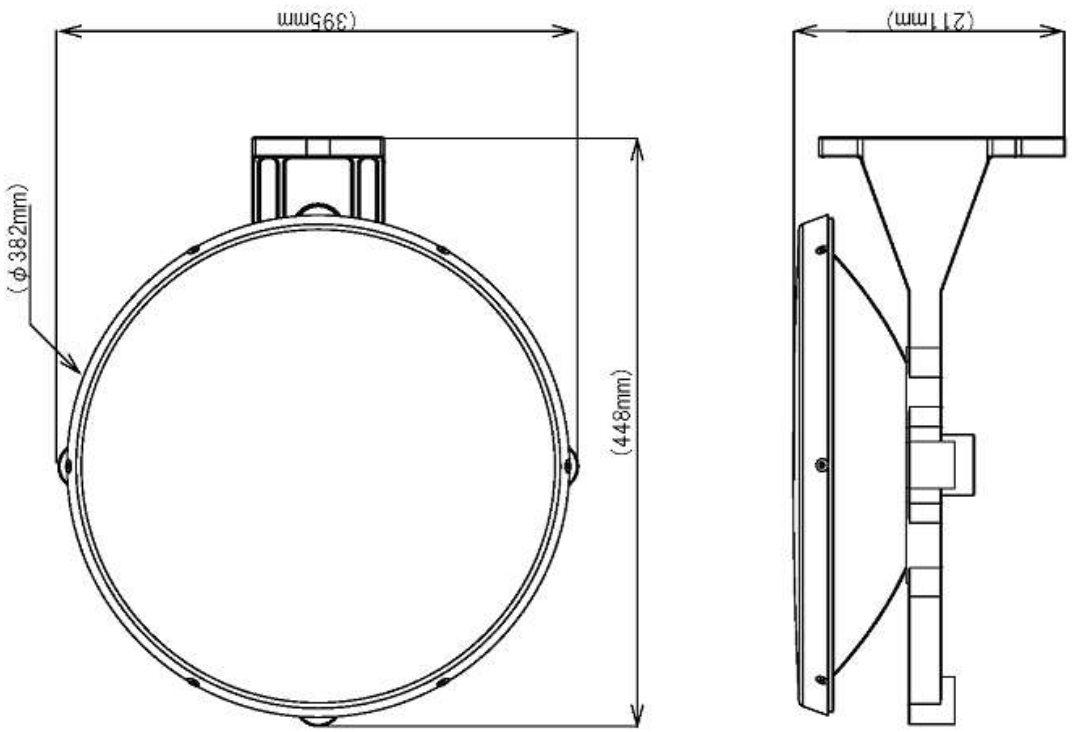

1-feet Cassegrain Antenna

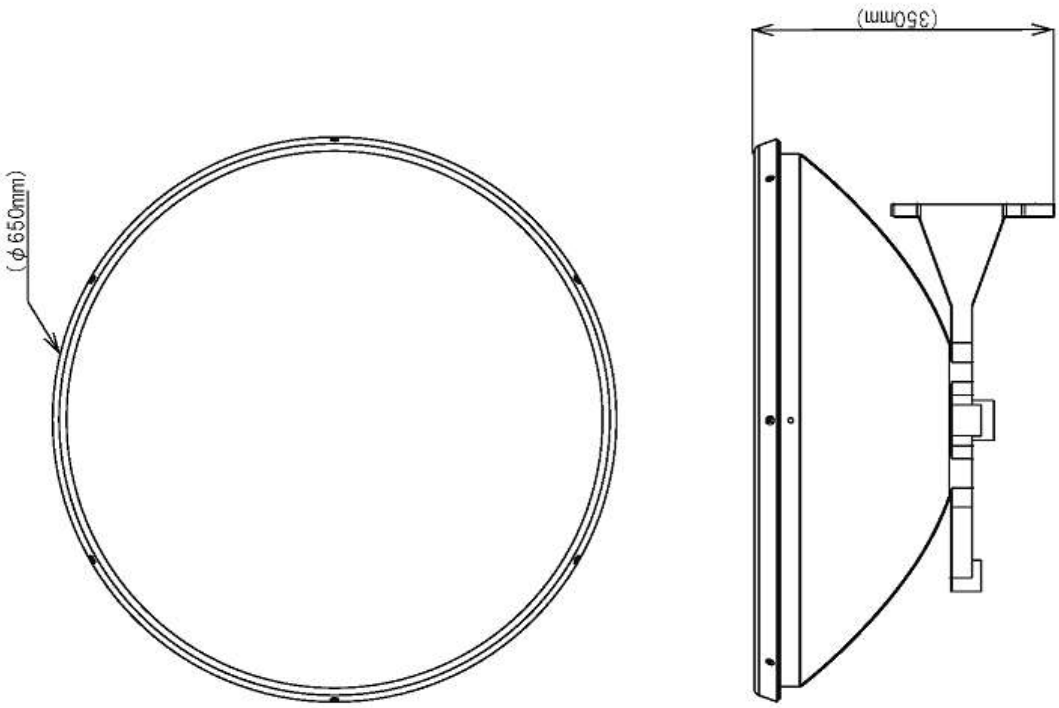

2-feet Cassegrain Antenna

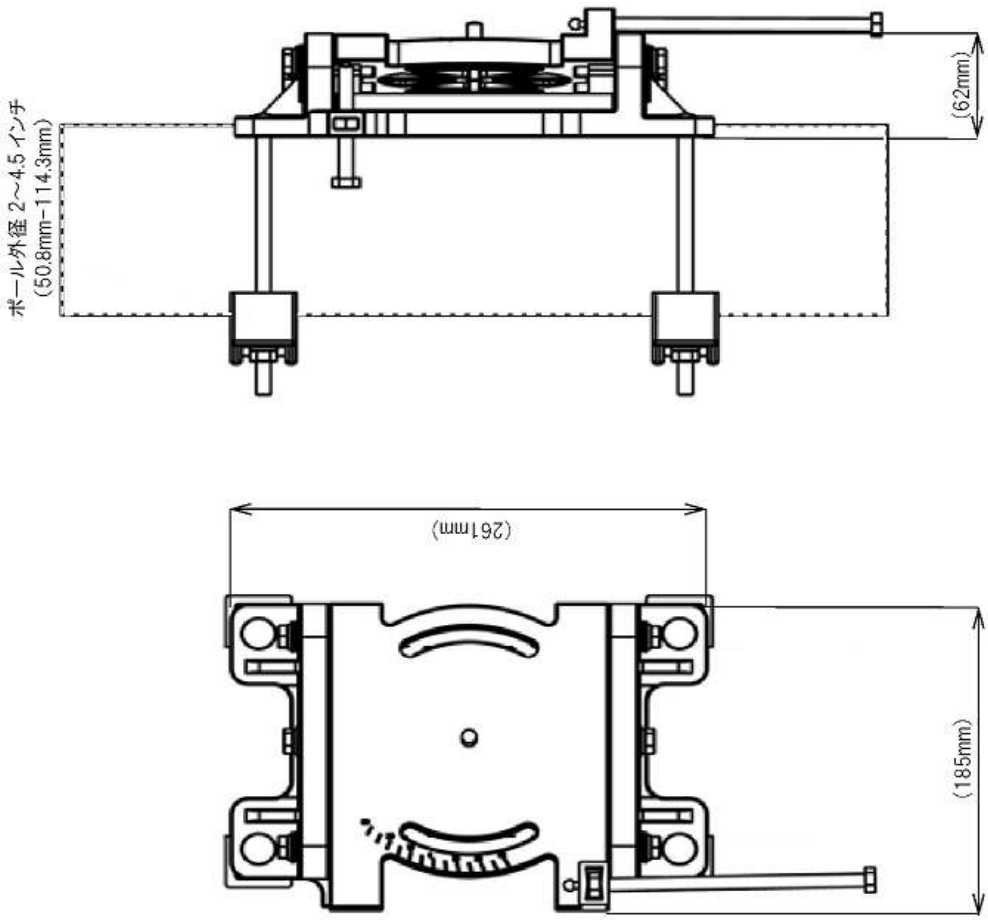

Mounting Kit

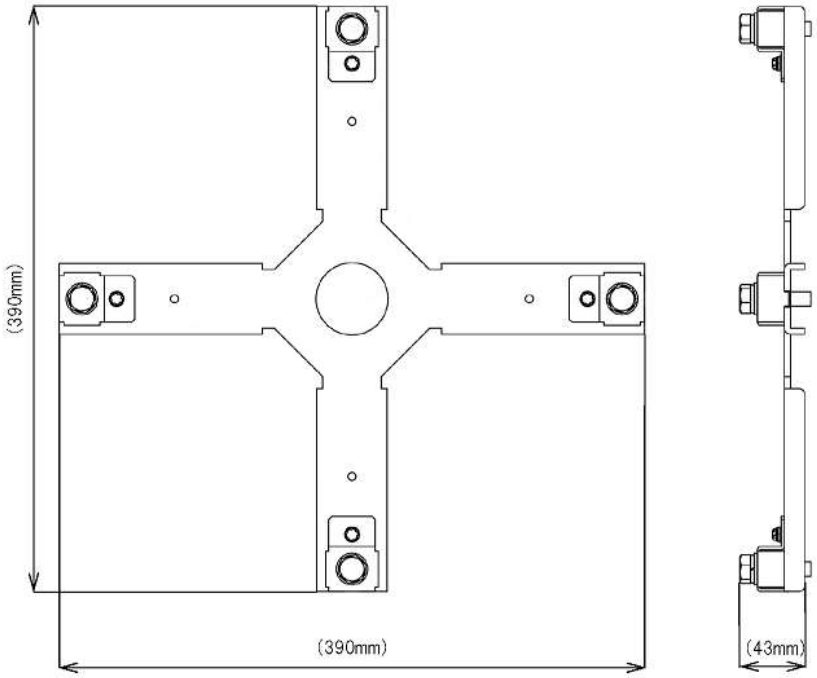

Connection Material

2.4.4 Breakdown Components of Mounting Kit

Breakdown components of mounting kit are shown below:.

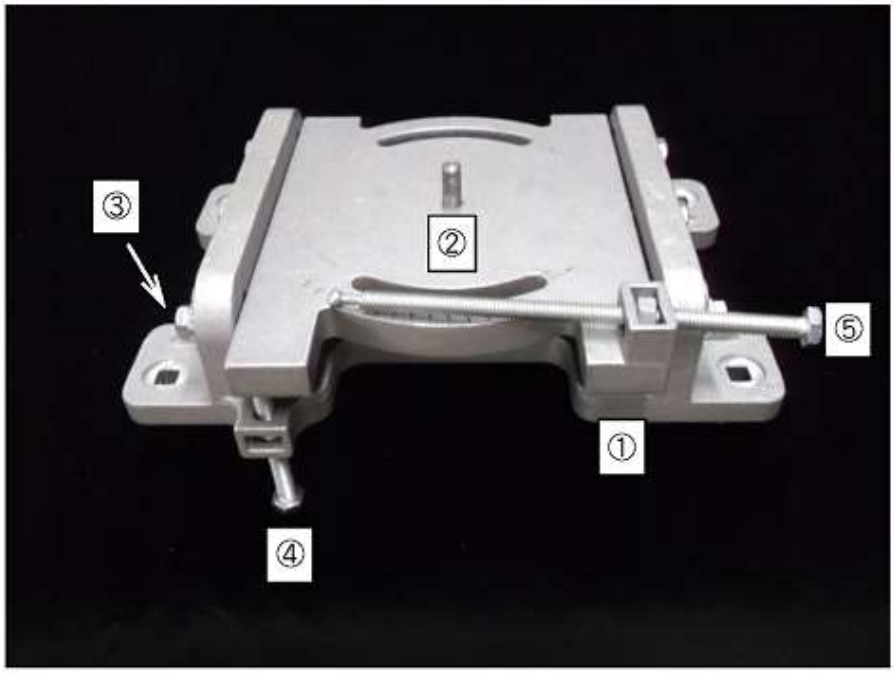

1: Antenna mount plate
2: Tilt plate
3: Azimuth fixing bolts (x6)
4: Azimuth adjusting bolts
5: Elevation adjusting bolt

Above components are delivered to the site after assembling.

6: Holder for pole (x2)
7: Elevation fixing bolts, washers & spring washers (x2)
8: Mount fixing bolts, washers & spring washers (x4)
9: Lock bolt

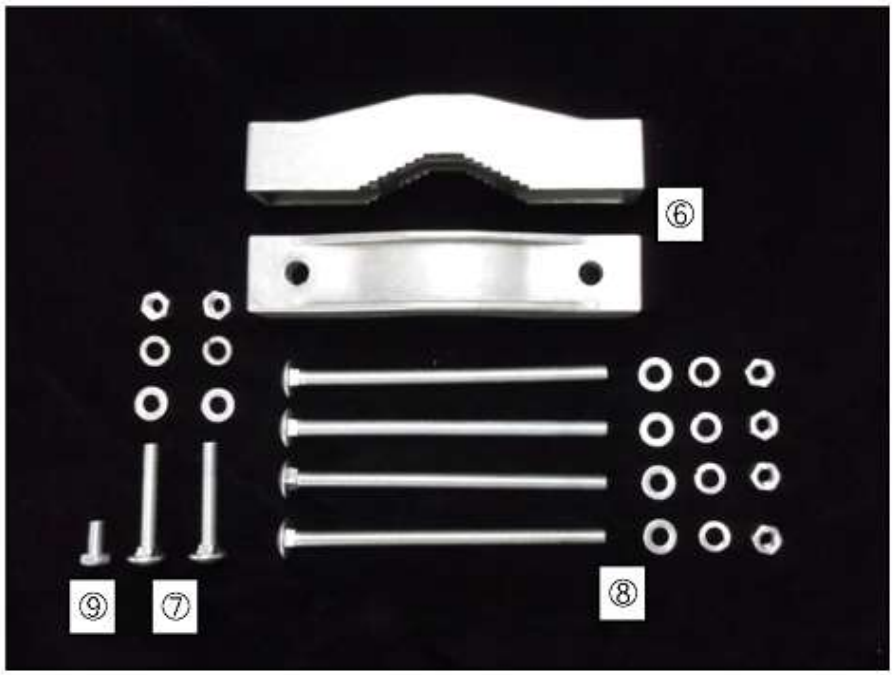

Breakdown Components of Mounting Kit

2.4.5 Fixing Mounting Kit to Pole

Step-1: Fixing Mounting Kit to Pole Loosely

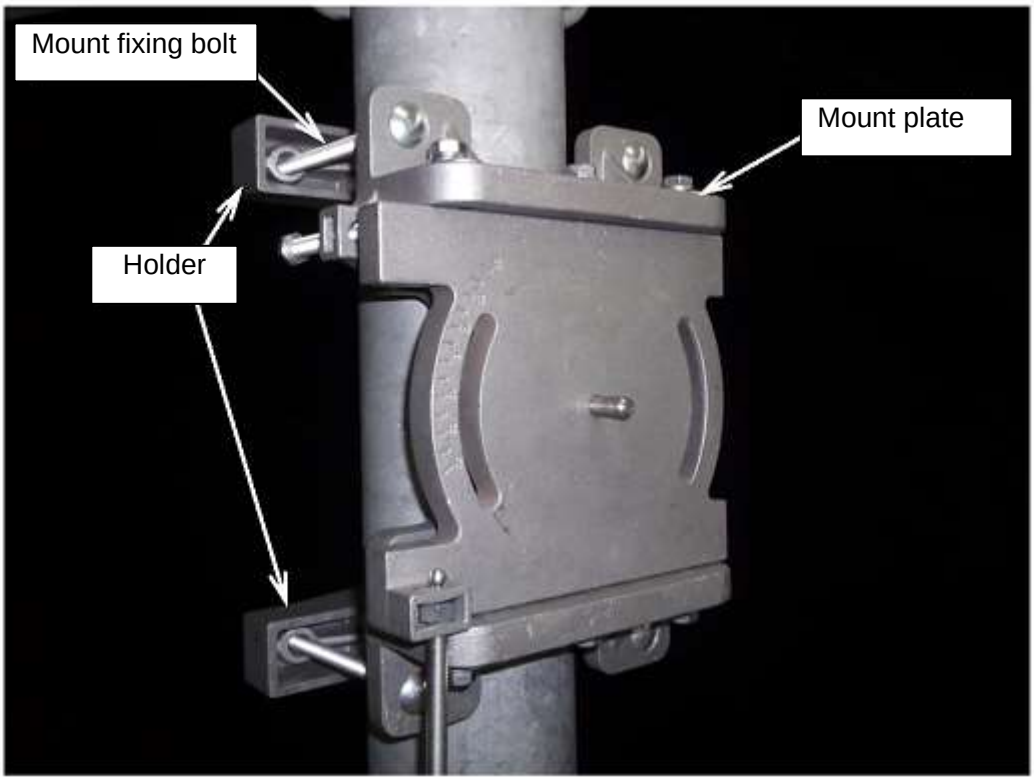

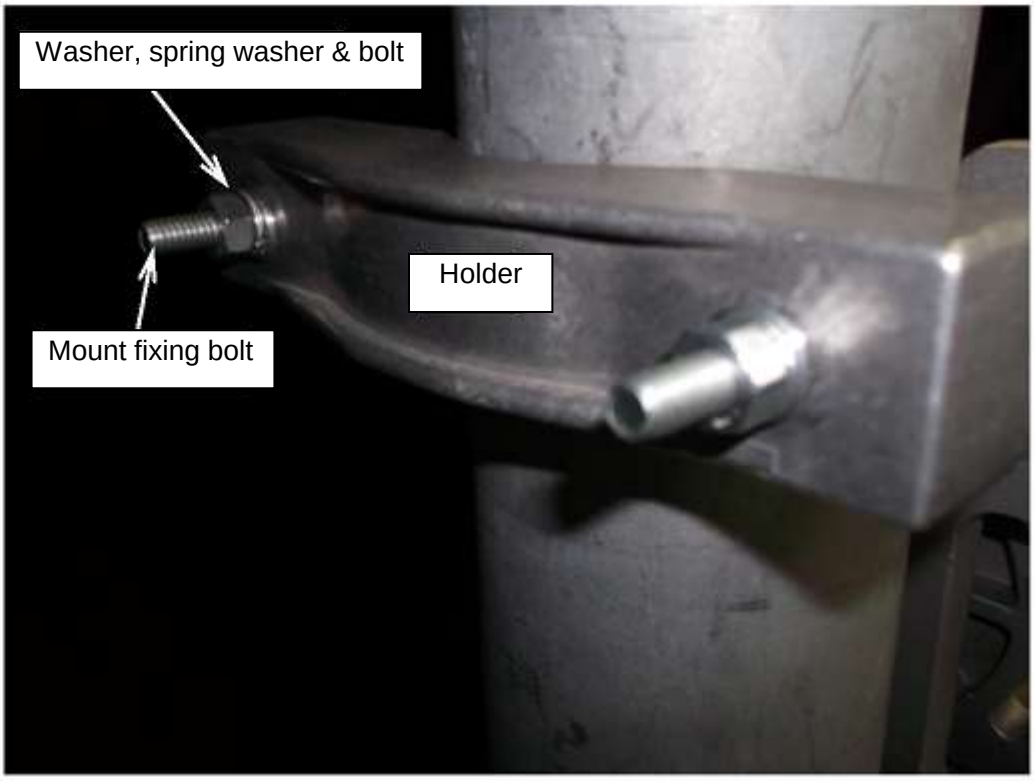

Step-2: Adjust Fixing Mounting Kit Position

- Adjust mounting kit position to the direction of far-end station.

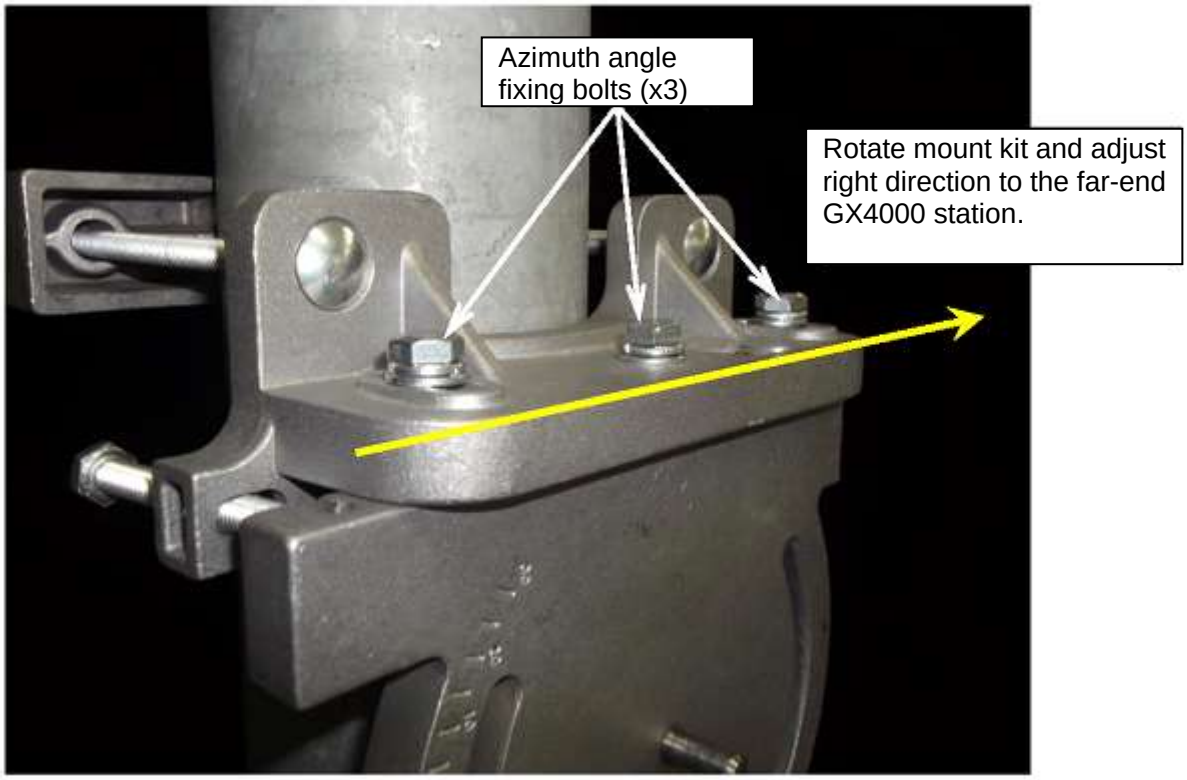

Step-3: Fixing Mounting Kit to the Pole

- Fix the mounting kit to the pole tightly by azimuth adjusting bolts (x6) and mounting fixing bolts (x4). Rated torque is 14.4 to 17.6 N/m.

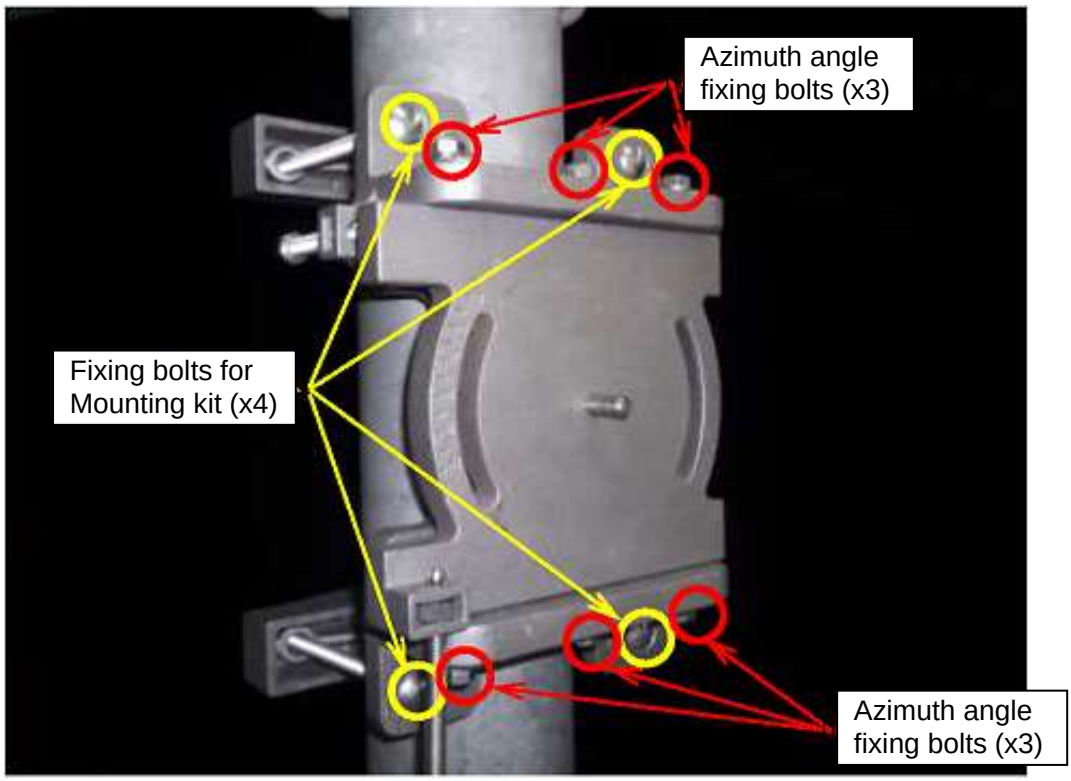

Step-4: Adjusting Elevation Bolt Position

- Loose the elevation bolt to the right position (see below).
- Take care for over loosing.

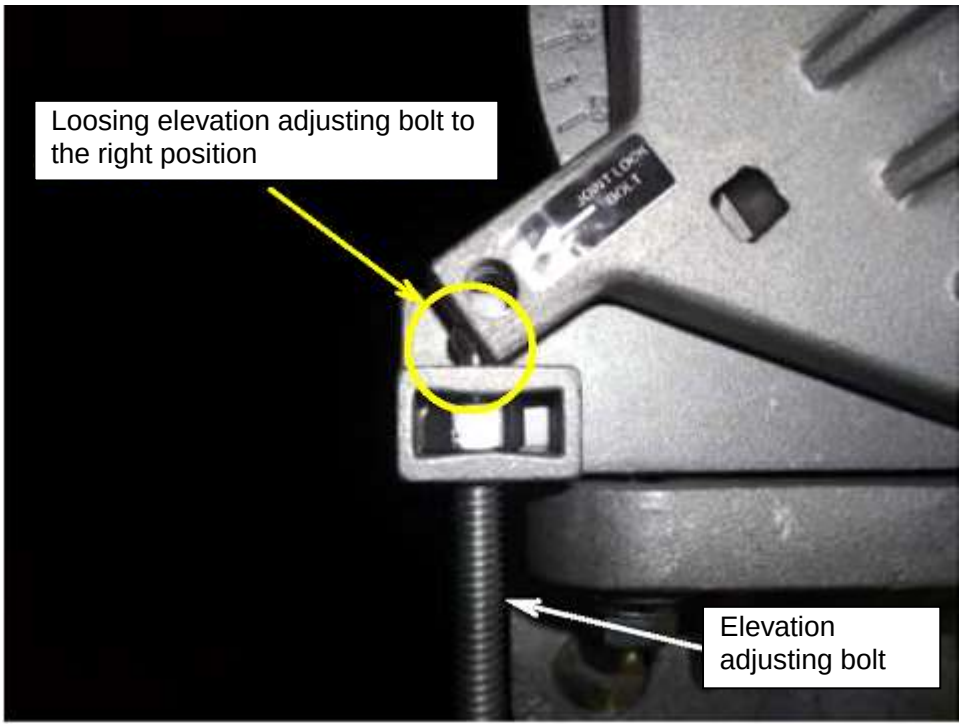

Step-5: Grease

- Grease to the azimuth adjusting bolt and screw
- Grease to the elevation adjusting bolt and screw
- Grease to the antenna base (elevation adjusting bolt fitting part)
- Grease to the tilt plate (centre pin and variable slot)

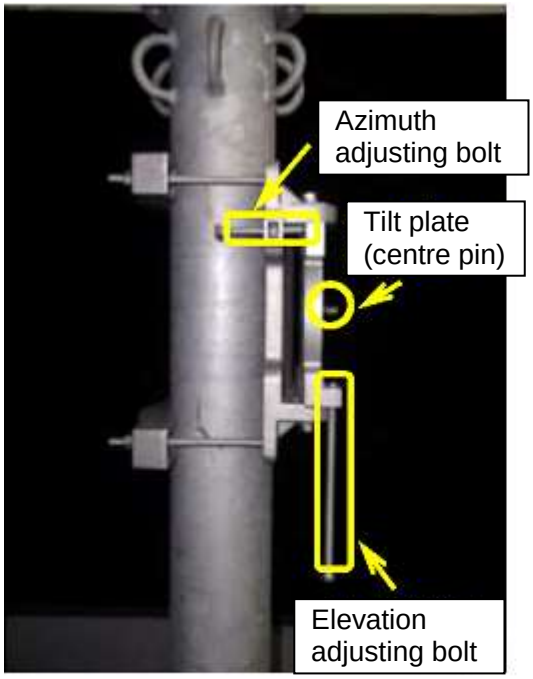

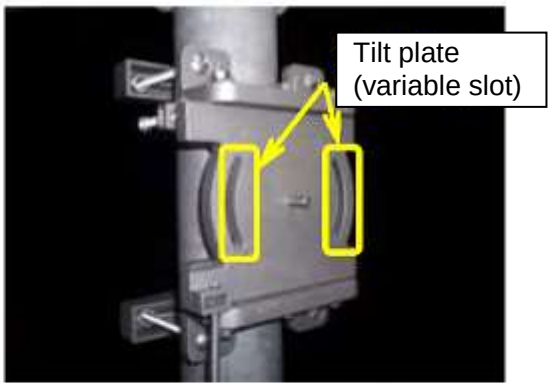

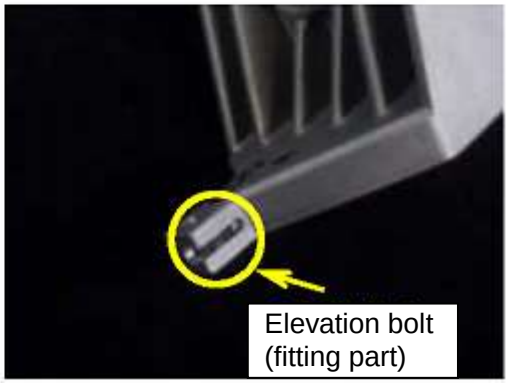

Step-6: Installing Antenna Base to the Tilt Plate

- Install antenna base to the tilt plate through center pin.

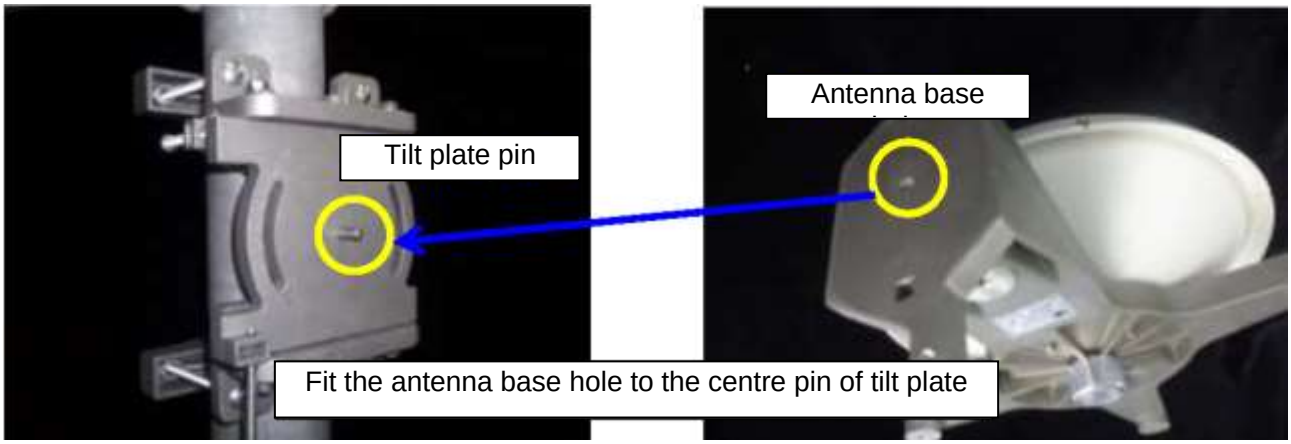

Step-7: Fixing Antenna Base and Tilt Plate

- Fix the elevation adjusting bolt from mount plate by washer, spring washer and lock bolts.
- Adjust antenna slot base and elevation adjusting bolt

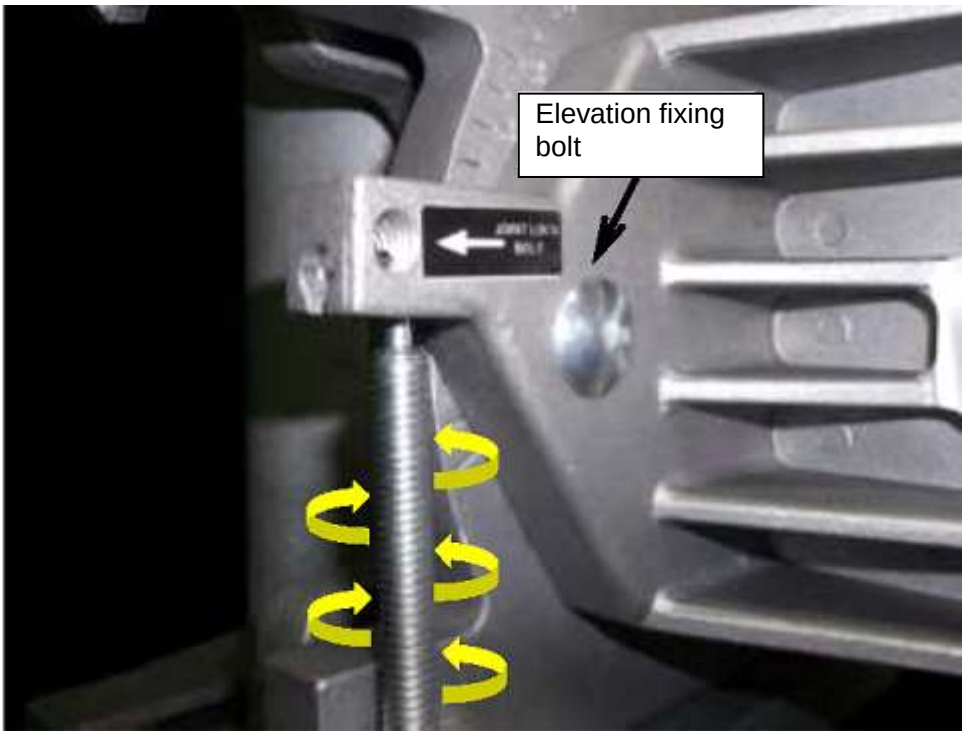

Step-8: Set Antenna Vertical Angle to Zero

- Set antenna vertical angle to zero and install lock bolt..
- Fix using elevation fixing bolts (x2) and lock bolt.

  Rated torque is 14.4 to 17.6 N/m.

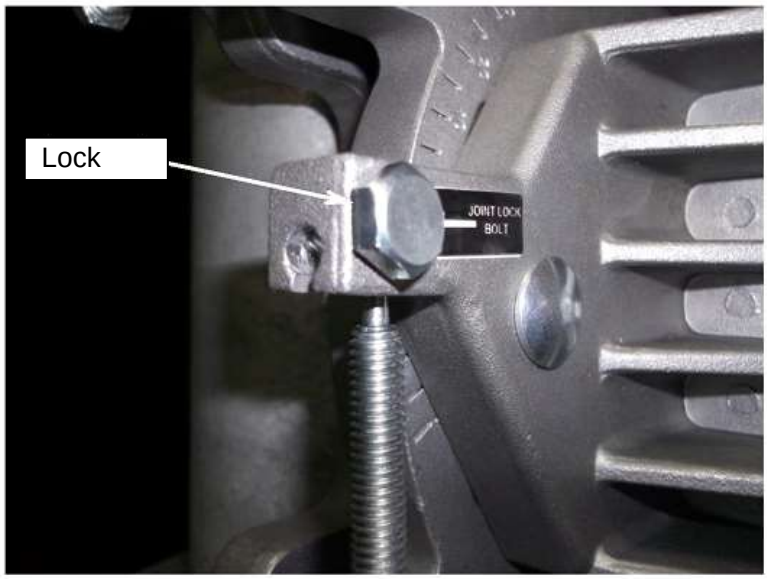

Step-6: Drain Plug Setting

Drain plug should be OFF
for lower part of antenna

Drain plug should be ON
for lower part of antenna

Drain Plug

2.5 Assembly of Connection Material with GX4000

Step-1: Polarization Setting

- Install connection material with GX4000 by 4xM5 bolts.
- Fix by 4 x M5 cross bolts. Rated torque is 4.9 to 5.9 N/m.

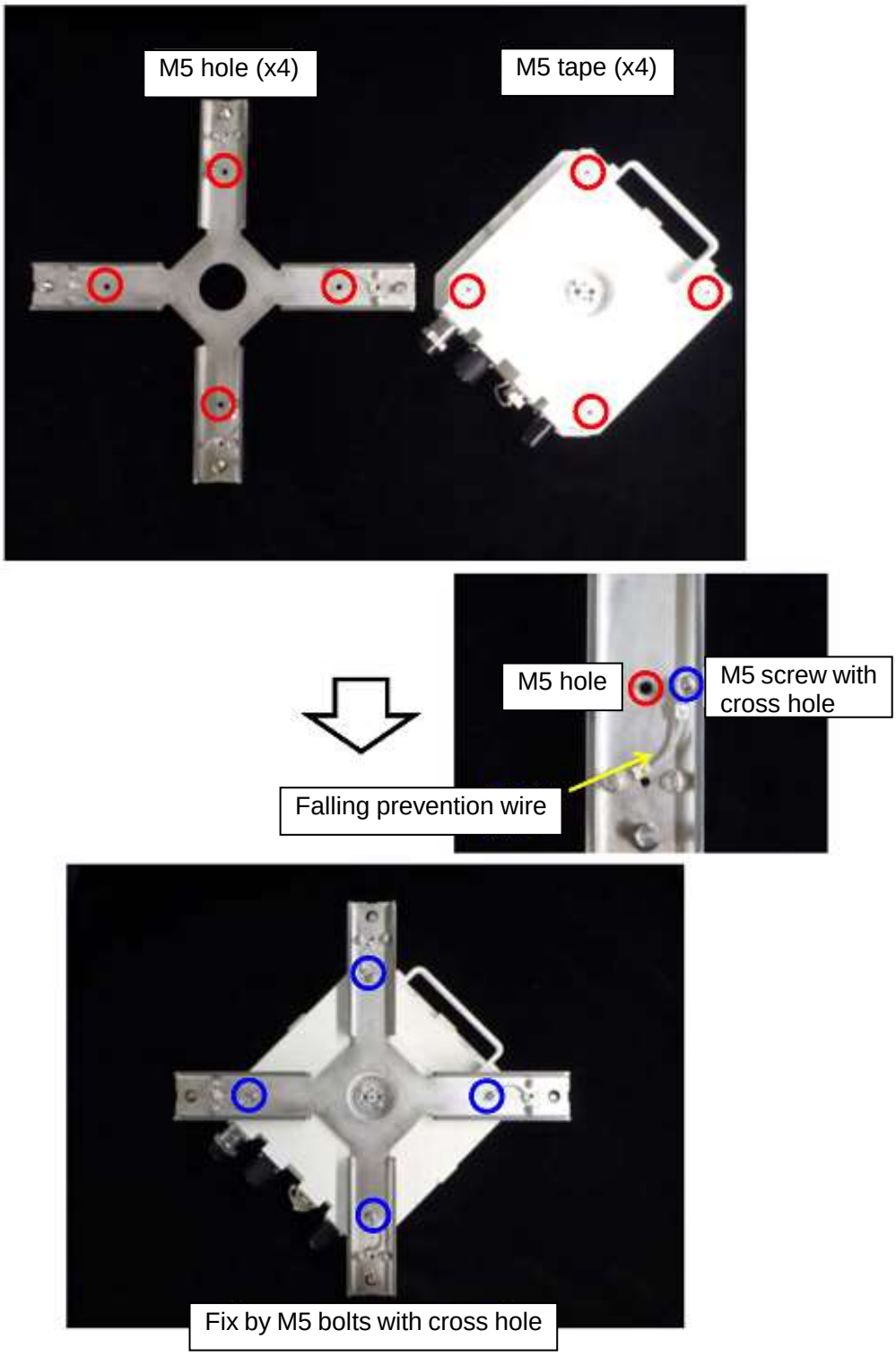

2.6 Confirmation of Antenna Polarization

- Confirm antenna polarization. Default setting is V-Polarization.
- Polarization change procedure is as follows:
  (1) Loose M3 cross bolts (x2) on antenna feed part
  (2) Rotate antenna feed part by 90 degree.
  (3) Lock antenna feed part by M3 cross bolts (x2).
  Rated torque is 0.9 to 1.1 N/m.

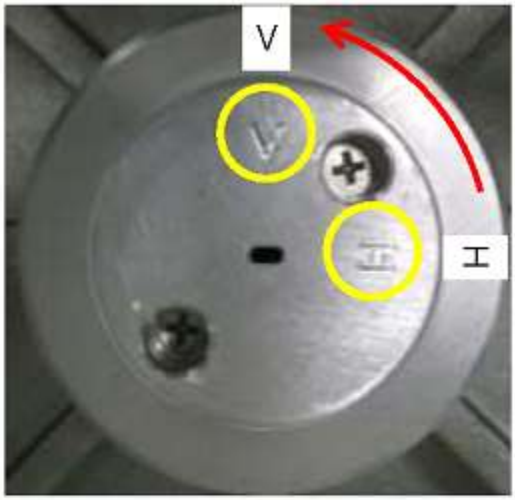

V-Polarization

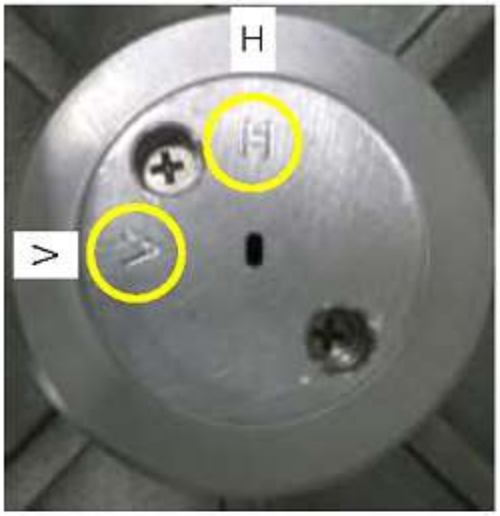

H-Polarization

Change V-Polarization to H-Polarization

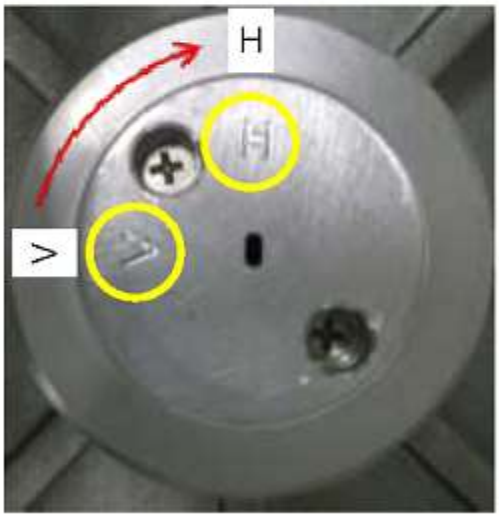

H-Polarization

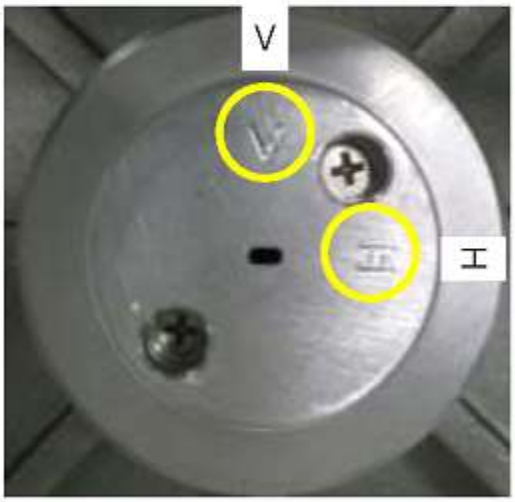

V-Polarization

Change H-Polarization to V-Polarization

2.7 Assembly of Antenna Base and GX4000

- Set x4 3/8-inch UNC bolts depending on polarization.
- Fix by 4 x UNC bolts. Rated torque is 18 to 22 N/m.

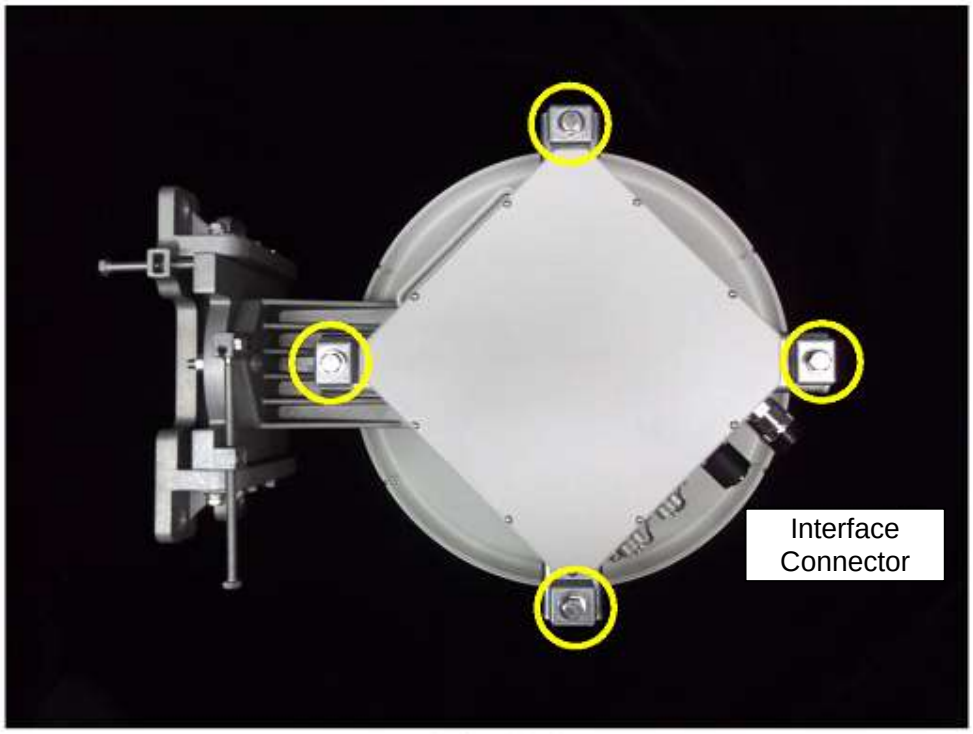

V-Polarized GX4000

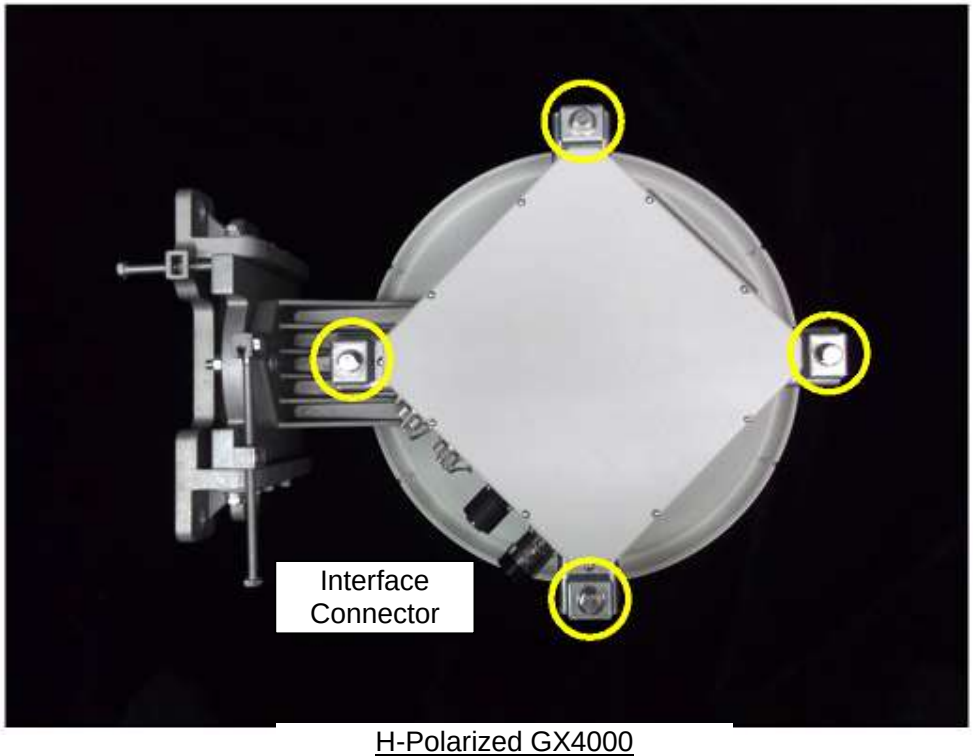

H-Polarized GX4000

2.8 Cable & Connector

This section provides information on cable & connector of baseband, power supply & monitoring to/from the external communication equipment.

2.8.1 Cable and Connector Code Necessary for Installation

Item	Goods		Code	Quantity	Remarks
1	Power	DC -48 V	GX4K80CBPD(*1)	1	(*1): Cable length 01-90: 1 to 90 m 99: 100m When select connector, cable is provided by the customer.
			GX4K80CNPD		
		AC 100 to 240 V	GX4K80CBPA(*1)		
			GX4K80CNPA		
2	ETH		GX4K80CBET(*1)	1	(*2): Cable length 01-90: 1 to 90 m When select connector, cable is provided by the customer and cable type is water-proof.
3	MON		GX4K80CBAL(*1)	(1)	For monitoring use When select connector, cable is provided by the customer.
			GX4K80CNHK		
4	OPT	Ether	GX4K80CB2S(*1)	1	Select 2-SMF Ether, 1xSMF CPRI and 2-MMF CPRI depending on user interface. When cable length is adjusted on site, necessary waterproof cable is provided by the customer
		CPRI 1-core	GX4K80CB1S(*1)		
		CPRI 2-core	GX4K80CB2M(*1)		
5	FG		GX4K80CBFG	1	M8 crimping terminal. Cable used is provided by customer

2.8.2 Cable and Connector Description

Table 2.8.2a DC Power Cable

Connector Equipment side	Cable Specification	Connector External. equipment side
Waterproof, Round type, 4-Pin	4-conductor captire (0.75 mm2) AWG14 (2.08 mm^2)	M4 crumping terminal

Table 2.8.2b AC Power Cable

Connector Equipment side	Cable Specification	Connector External. equipment side
Waterproof, Round type, 3-Pin	4-conductor captire (0.75 $mm^{2)}$ AWG14 (2.08 mm^2)	M4 crumping terminal

Table 2.8.2c Ether Electrical Cable

Connector Equipment side	Cable Specification	Connector External. equipment side
Waterproof, RJ-45	CAT5E with shield	RJ-45

Table 2.8.2d Ether Optical Cable

Connector Equipment side	Cable Specification	Connector External. equipment side
Waterproof, Round type, LC duplex (2xLC)	2-conductor type Single-mode fiber (SMF), 1310 nm	LC duplex (2xLC)

Table 2.8.2e CPRI Optical Cable for CPRI BBU & CPRI RRH

Connector Equipment side	Cable Specification	Connector External. equipment side
Waterproof, Round type, SC x1	1-conductor type Single-mode fiber (SMF), 1310 nm	1xLC

Table 2.8.2f CPRI Optical Cable for CPRI MMF

Connector Equipment side	Cable Specification	Connector External. equipment side
Waterproof, Round type, LC duplex (2xLC)	2-conductor type Multi-mode fiber (MMF), 850 nm	LC duplex (2xLC)

Table 2.8.2g I/O Cable

Connector Equipment side	Cable Specification	Connector External. equipment side
Waterproof, Round type, 8-Pin	Signal: 4 x 0.5 mm^2 Frame groung: AWG18	M4 crumping terminal

2.8.3 Cable and Connector Used

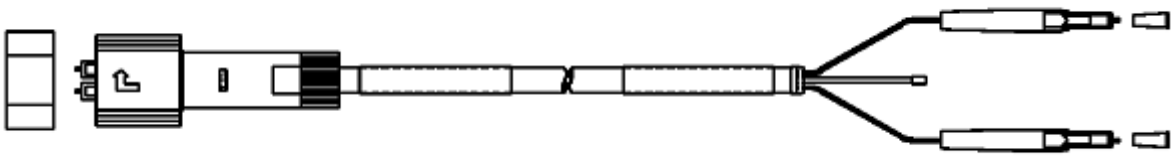

Ether Optical Cable & Connector

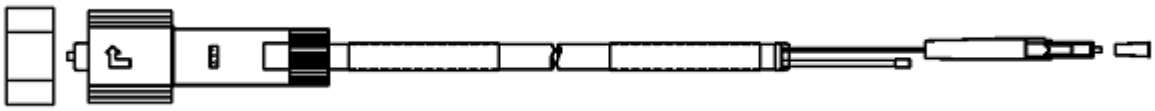

CPRI Optical Cable & Connector, 1-core

PRI Optical Cable & Connector, 2-core

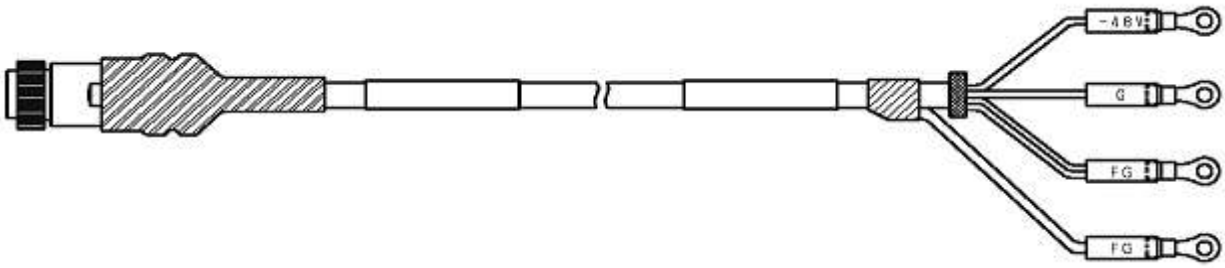

DC Power Supply Cable & Connector

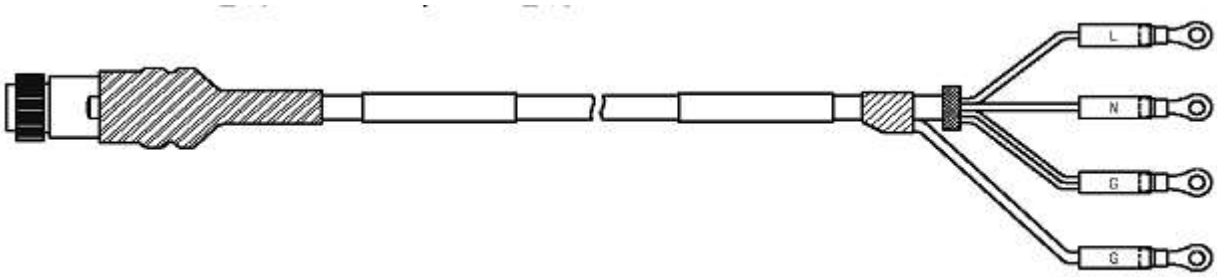

AC Power Supply Cable & Connector

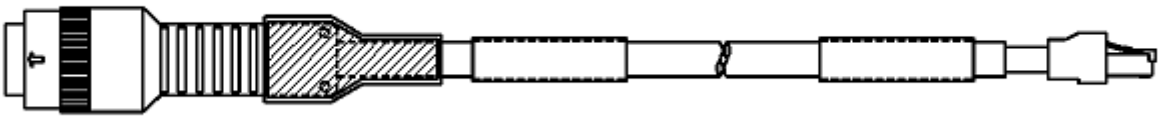

Ether Cable & Connector (Electrical)

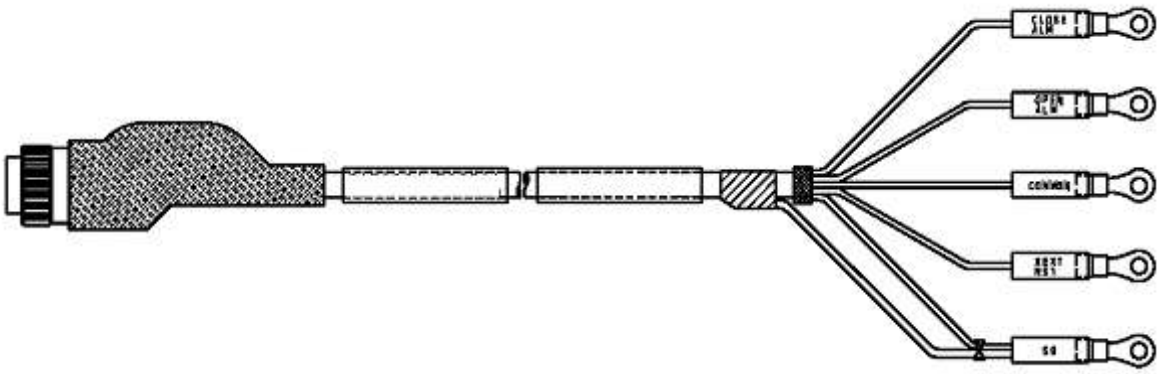

IO Cable & Connector

Cripming Terminal

2.8.4 Pin Assignment of Connector

Table 2.8.4a Pin Assignment of Connector (Optical Ether Cable)

Item	GX4000 Side					Ext Equipment Side	
	Signal	Direction	Connector	Pin No.		Label	Connector
1	RX	IN	SW20-LC	1		IN	LC
2	TX	OUT		2		-	LC

Table 2.8.4b Pin Assignment of Connector (Optical CPRI 1-core Cable)

Item	GX4000 Side					Ext Equipment Side	
	Signal	Direction	Connector	Pin No.		Label	Connector
1	TX/RX	IN/OUT	SW20-SC	1		-	LC

Table 2.8.4c Pin Assignment of Connector (Optical CPRI 2-core Cable)

Item	GX4000 Side					Ext Equipment Side	
	Signal	Direction	Connector	Pin No.		Label	Connector
1	TX/RX	IN/OUT	SW20-SC	1		IN	LC
2	TX/RX	IN/OUT		2		-	LC

Table 2.8.4d Pin Assignment of Connector (DC Power Supply)

Item	GX4000 Side					Ext Equipment Side	
	Signal	Direction	Connector	Pin No.		Label	Connector
1	-48 V	-	Water-Proof, Round, 4P	1		TM1	M4 crimp
2	FG (*1)	-		2		TM2	M4 crimp
3	FG (*1)	-					
4	G	-		3		TM3	M4 crimp
5	FG (*2)	-		shiald		TM4	M4 crimp

Note-*1: Pin-2 of GX4000 side and TM3 is connected by two cables.
Note-*2: Shield of cable and TM4 is connected.

Table 2.8.4e Pin Assignment of Connector (AC Power Supply)

Item	GX4000 Side					Ext Equipment Side	
	Signal	Direction	Connector	Pin No.		Label	Connector
1	L	-	Water-Proof, Round 4P	1		TM1	M4 crimp
2	N	-		2		TM2	M4 crimp
3	G (*1)	-		3		TM3	M4 crimp
4	G (*1)	-					
5	G (*2)	-		shield		TM4	M4 crimp

Note-*1: Pin-3 of GX4000 side and TM3 is connected by two cables.
Note-*2: Shield of cable and TM4 is connected.

Table 2.8.4f Pin Assignment of Connector (Ether Electrical Cable)

Item	GX4000 Side					Ext Equipment Side	
	Signal	Direction	Connector	Pin No.		Label	Connector
1	TD(+)	-	Water-Proof, RJ-45	1		1	RJ-45
2	TD(-)	-		2		2	
3	RD(+)	-		3		3	
4	-	-		4		4	
5	-	-		5		5	
6	RD(-)	-		6		6	
7	-	-		7		7	
8	-	-		8		8	

Table 2.8.4g Pin Assignment of Connector (I/O Cable)

Item	GX4000 Side					Ext Equipment Side	
	Signal	Direction	Connector	Pin No.		Label	Connector
1	CLOSE ALM	-	Water-Proof, Round 8P	1		TM1	M4 crimp
2	OPEN ALM	-		2		TM2	M4 crimp
3	COMMON	-		3		TM3	M4 crimp
4	NC	-		4		-	
5	NC	-		5		-	
6	NC	-		6		-	
7	EXT XRST	INPUT		7		TM4	M4 crimp
8	SG	-		8		TM5	M4 crimp
9	FG (*1)	-		External		-	
10	FG (*2)	-	-	-		TM5	M4 crimp

Note-*1: Cable shield and connector out of GX4000 is connected.
Note-*2: Cable shield and TM5 is connected.

2.8.5 Cable Connector Location

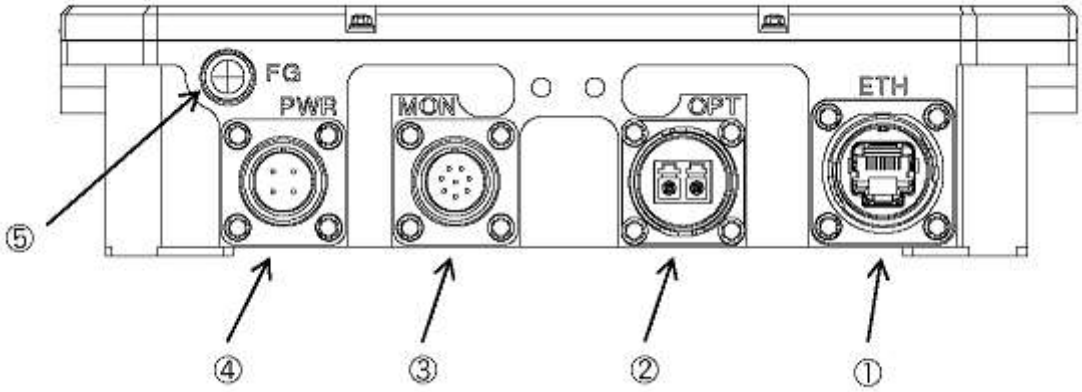

Cable Connector Layout of GX4000

Table 2.8.5 Connectors on GX4000

Item	Indication	Cable	Description	Cable
1	ETH	RJ-45	1GbE electrical or maintenance port	Ether cable
2	OPT	Ether: 2xLC CPRI 1-core: 1xSC CPRI 2-core: 2xLC	Optical IN/OUT	Optical cable
3	MON	Round 8P	Housekeeping RSL monitoring	IO cable Monitor cable
4	PWR	DC: Round 4P AC: Round 3P	DC -48 V AC: 100 to 240 V	DC power cable AC power cable
5	FG	M8 bolt	Frame ground	

2.8.6 Cable Connetion with External Equipment

Table 2.8.6 Cable Connection with External Equipment

Item	Indication	Cable	External Equipment	Remarks
1	OPT	Ether	10GBASE-LR network equipment	Customer provision
		CPRI 1-conductor	CPRI BBU or CPRI RRH	
		CPRI 2-coreductor	CPRI REC or CPRI RRE	
2	PWR	Power supply	Station power supply sustem	
3	ETH	Ether	1000BASE-T network equipment or Web-based Local Terminal (WebLT)	
4	IO	IO	Monitoring equipment	

2.9 Cable Connetion between External Equipment

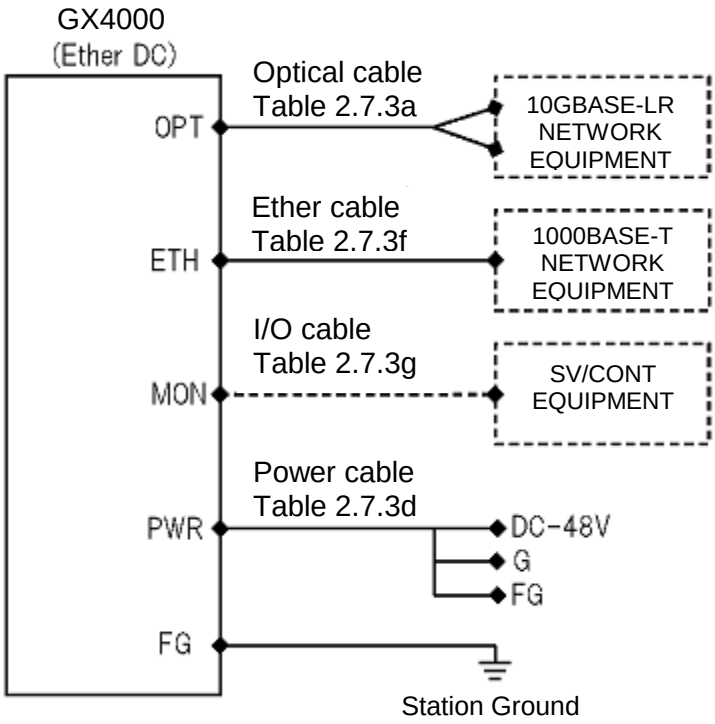

Figure 2.9a Cable Connection for Ether, 2-core MMF, DC-Feed

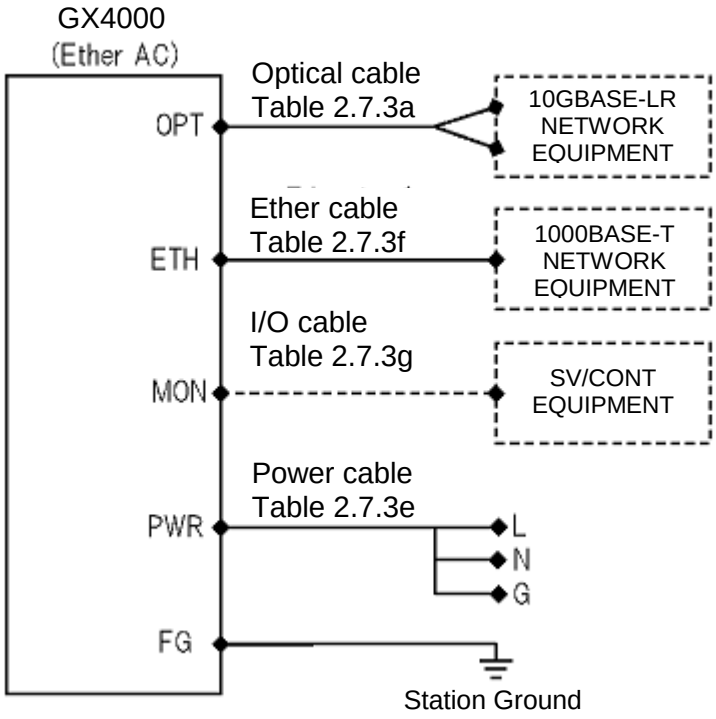

Figure 2.9b Cable Connection for Ether, 2-core MMF, AC-Feed

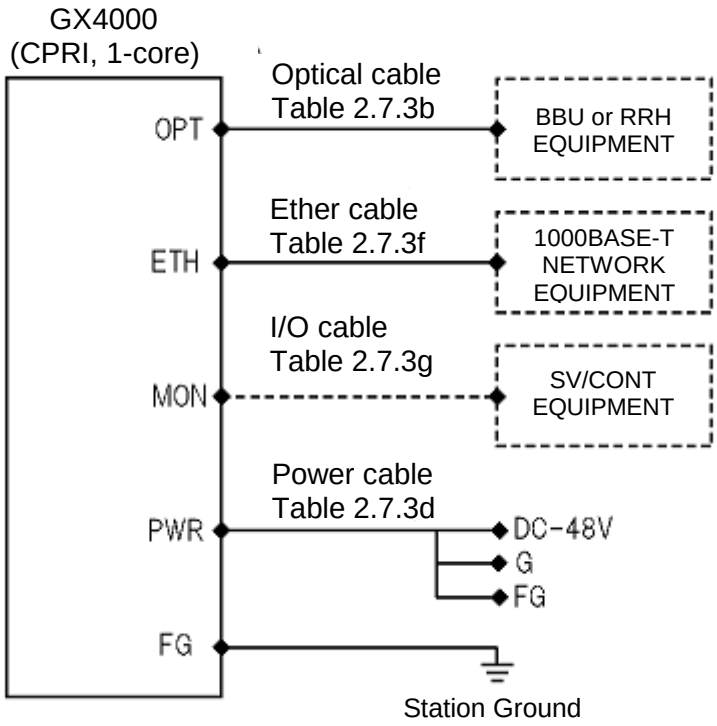

Figure 2.9c Cable Connection for CPRI, 1-core SMF, DC-Feed

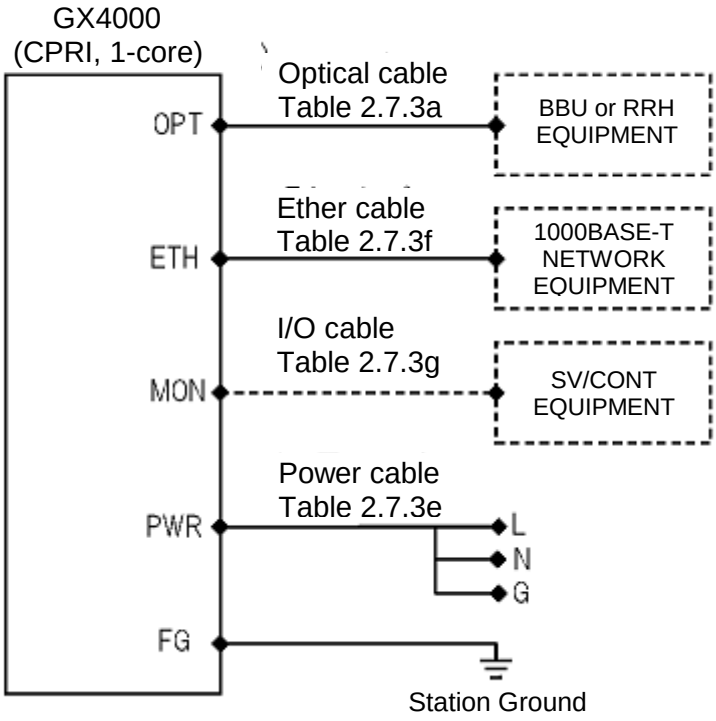

Figure 2.9d Cable Connection for CPRI, 1-core SMF, AC-Feed

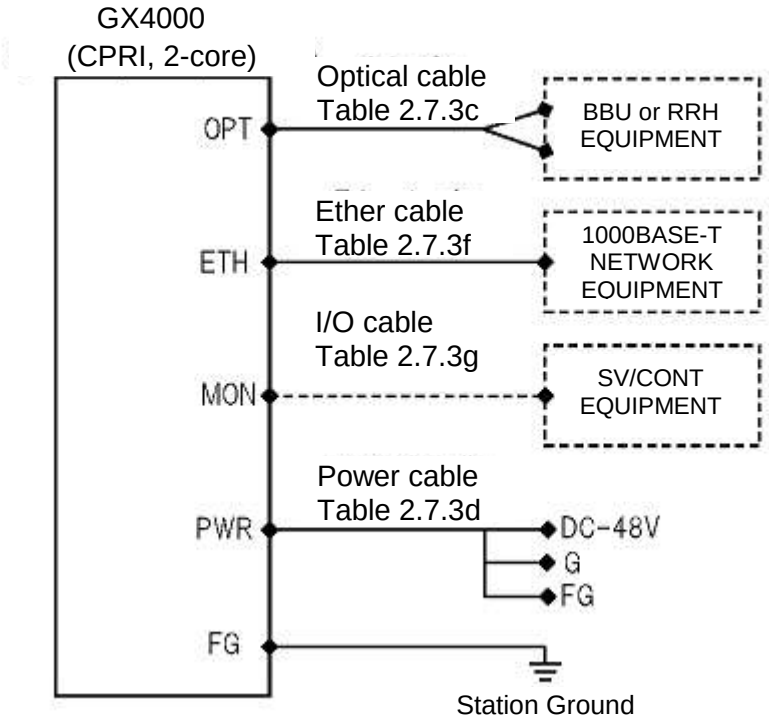

Figure 2.9e Cable Connection for CPRI, 2-core MMF, DC-Feed

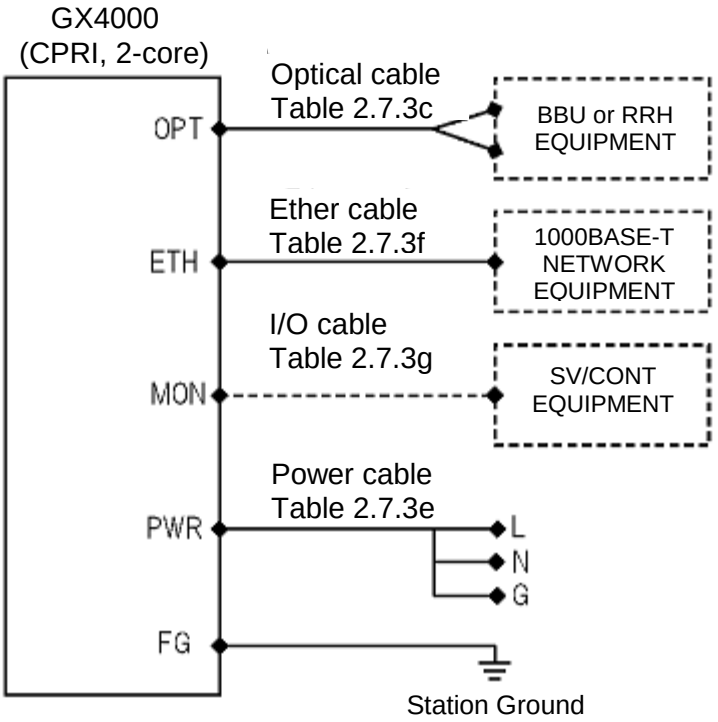

Figure 2.9f Cable Connection for CPRI, 2-core MMF, AC-Feed

2.10 Assembly of Connector

2.10.1 Optical Connector

Purchasing of optical connector is not available.

2.10.2 Ether Connector

Purchasing of Ethernet connector is not available.

2.10.3 I/O Connector

I/O connector is waterproof round type 8P connector. Necessary components such as cable, criping terminal and marker tube are provided by the customer.

I/O Connector

Table 2.10.3a Necessary Component

Item	Component	Specification	Quantity	Remarks
1	Connector	RM15WTPZ-8S (72)	1	HIROSE or eqievalent
2	Crump	JR13WCC-7 (72)	1	HIROSE oe eqievalent
3	Crimping terminal	F7-ACTRAG1R25-4	4	TM1-TM4
4	Crimping terminal	F7-ACTRAT2-4	1	TM-5
5	Cable	KVC36SB 5x0.5 mm^2	1 set	
6	Cable	UL1007-AWG18-GY	1 set	Green-Yellow
7	Thermal tube	NC-26	1	SUMITOMO 3M
8	Marker tube	ϕ 5.1	5	

Note: Item3 to item8 are provided by the customer.

Accembling Procedure

Step-1: Cable pre-forming

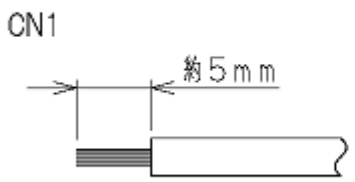

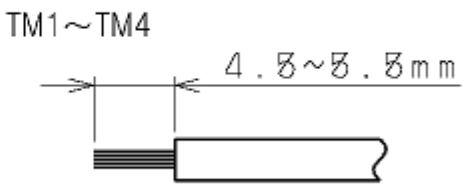

Step-2: Connector asembly

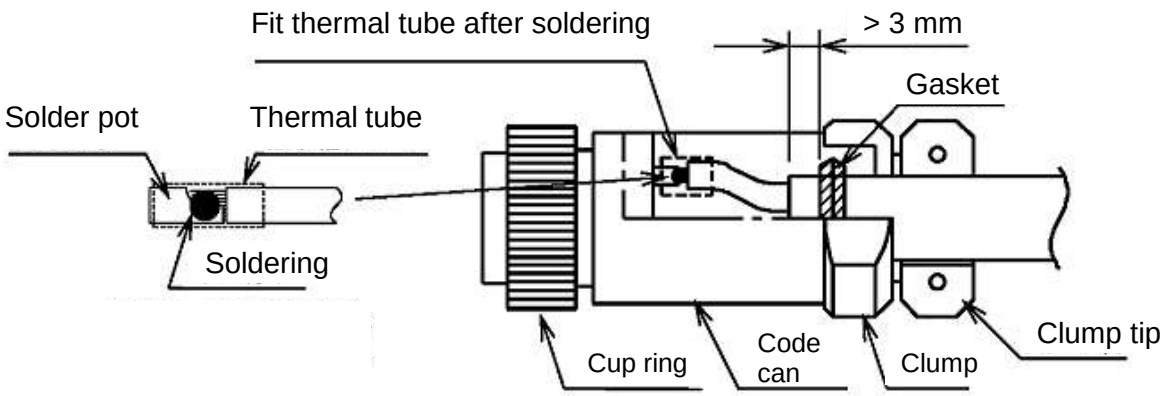

- Rated fixing torque for cup ring and code can is 3N/m.
- A part of male screw for code can is lock tight painted to prevent loose contact.
- Rated fixing torque for code can and crump is 3N/m.
- Crump and crump tip is fixed together with cable. Rated fixing torque of bolt is 0.3-0.35N/m.

Step-3: Crump TM1-TM4

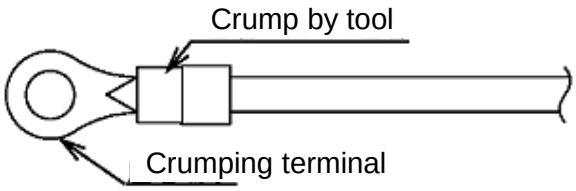

Step-4: FG line (CN1 side)

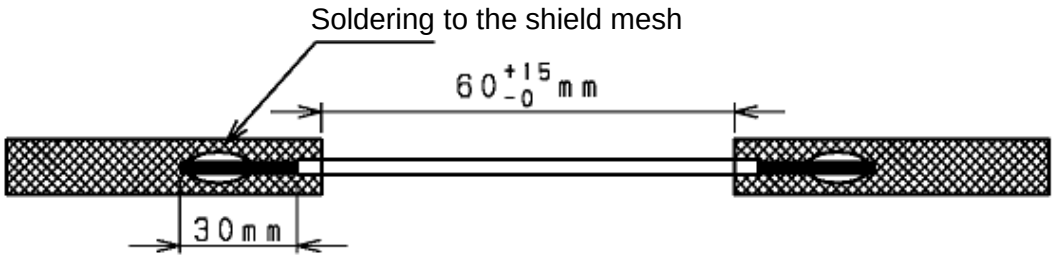

Step-5: Fixing FG to the Cable

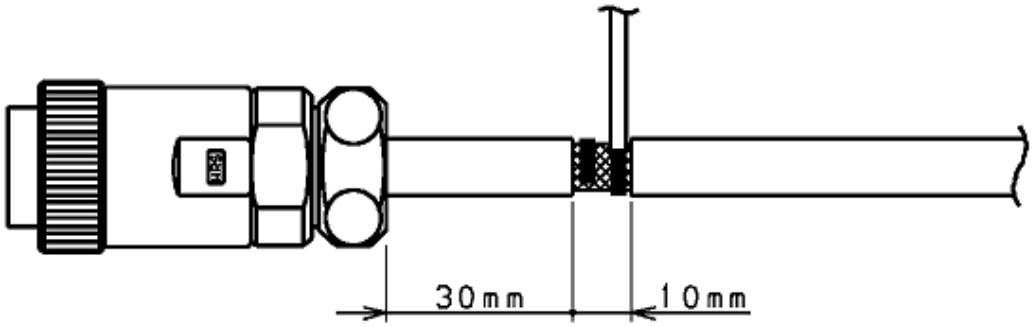

Skin the cable (10 mm) and FG cable is soldered to the shield mesh.

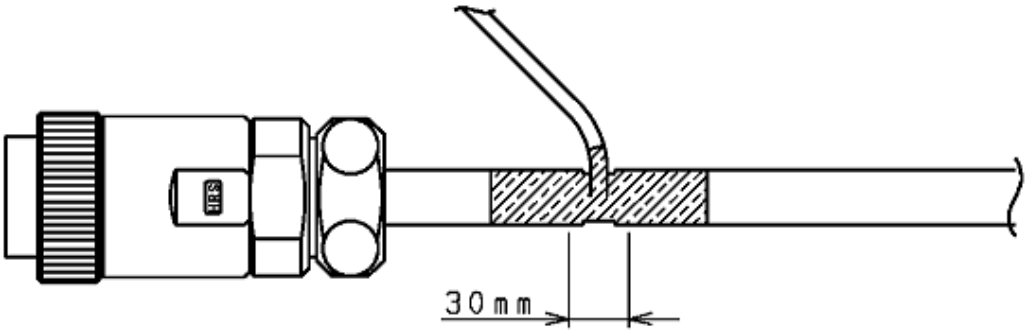

Wrap the self-bonding insulating tape in the part of shield mesh..

Step-6: Fixing FG to the Connector

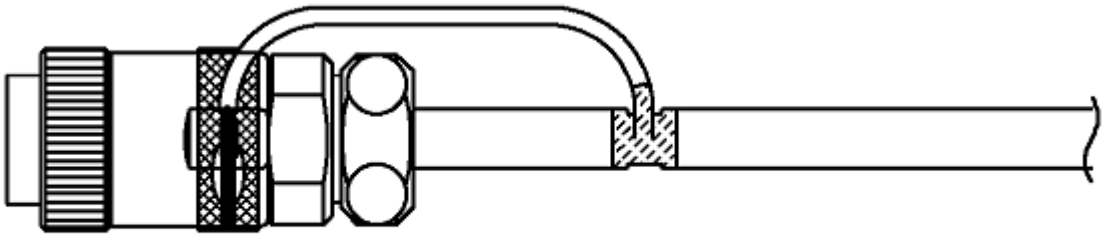

One end of soldered shield mesh is wrapped to the connector CN1.

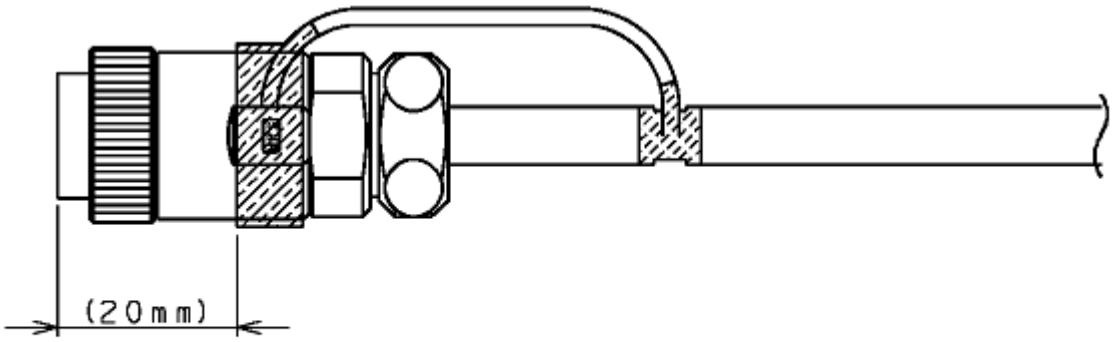

Wrap the self-bonding insulating tape on the part of shield mesh of CN1..

Step-7: Fitting thermal tube

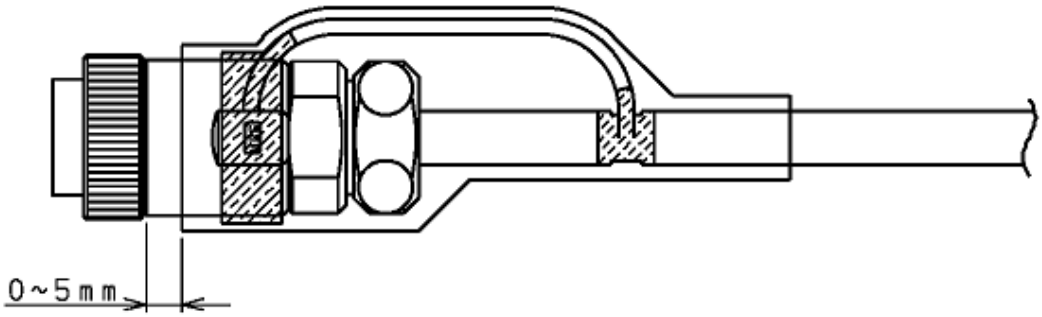

Put thermal tape covering connector CN1 and self-bonding insulating tape.

Step-8: FG cable (CN2 side)

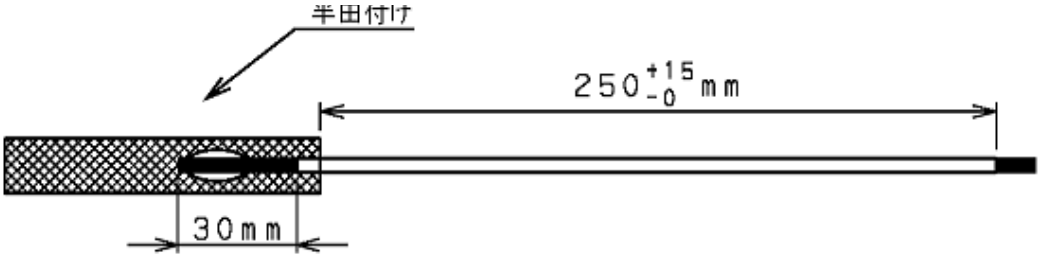

One end of UL1007-AWG18 cable is skinned by 30 mm and soldered. Other end is skinned by 4.5 to 5 mm.

Step-9: Fixing FG cable to the Cable

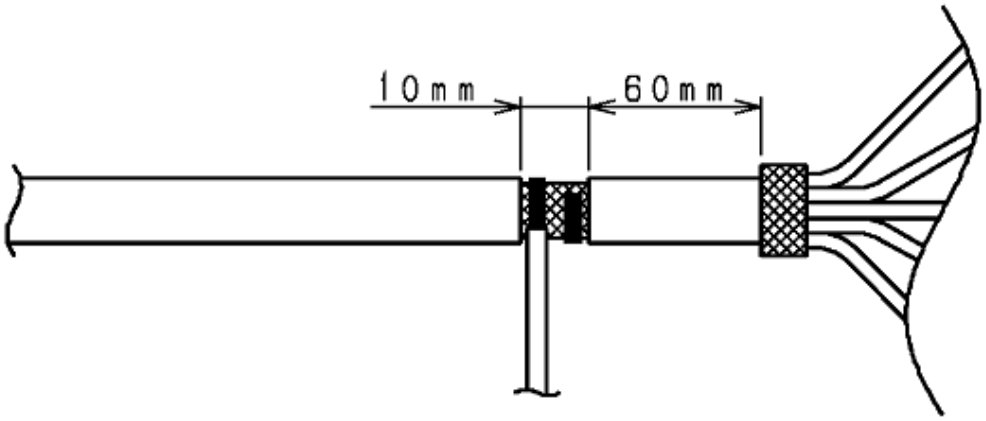

Skin the cable (10 mm) and FG cable is soldered to the shield mesh.

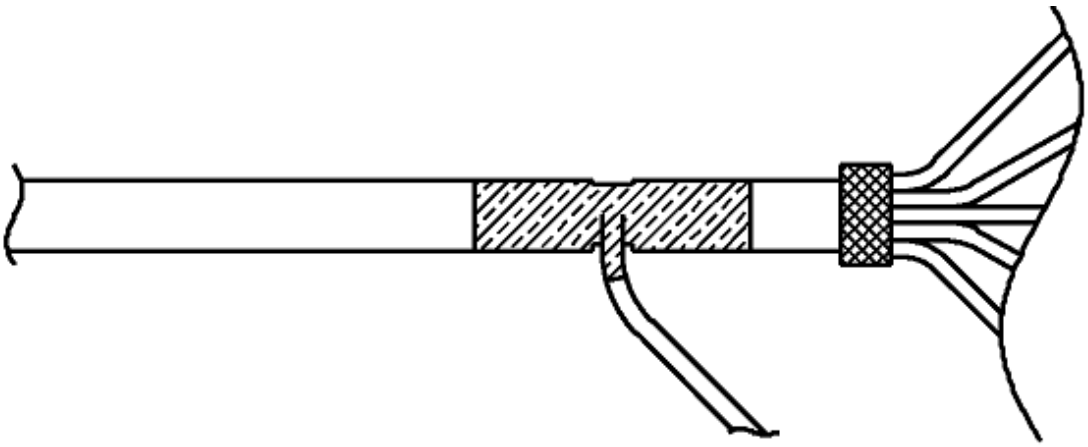

Wrap the self-bonding insulating tape on the part of shield mesh..

Step-10: Fitting to the TM5

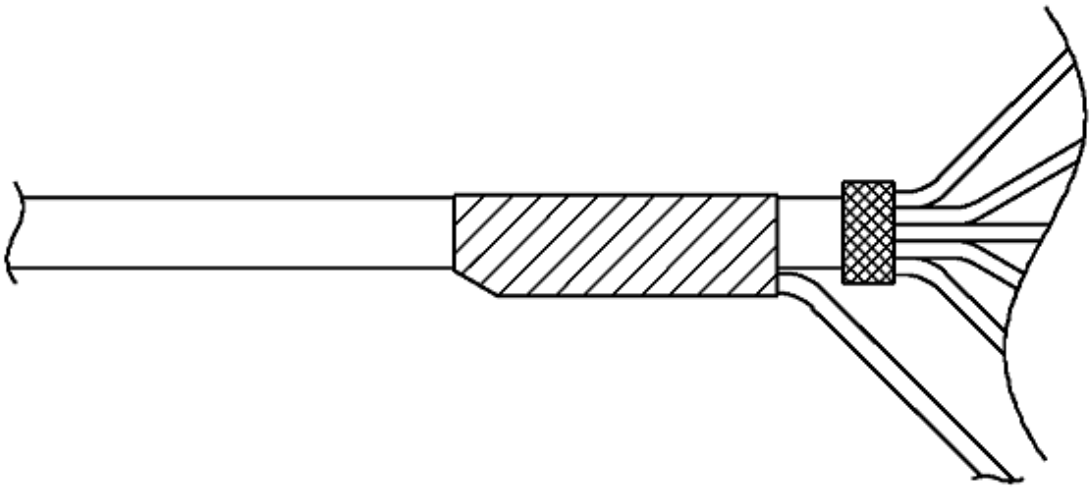

Put the thermal tape (black) covering self-bonding insulating tape.

Step-11: Fitting to the TM5

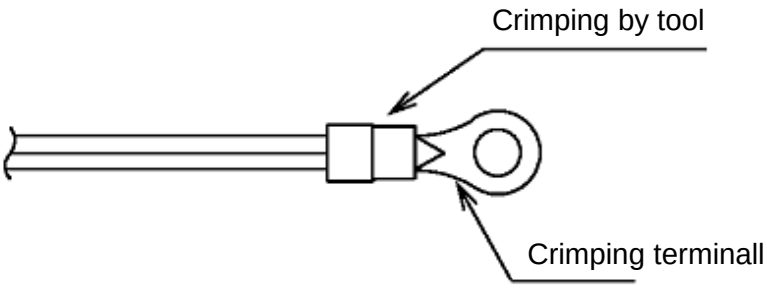

2.10.4 Power Supply Connector

Power supply connector is waterproof, round type connector. Necessary components such as cable, criping terminal and marker tube are provided by the customer.

Power Supply Connector

Table 2.10.4a Necessary Component for DC Feed

Item	Component	Specification	Quantity	Remarks
1	Connector	RM15WTPZA-4S (72)	1	HIROSE or eqievalent
2	Crump	JR16WCC-11 (72)	1	HIROSE oe eqievalent
3	Crimping terminal	M4, 0.75 mm^2	2	TM1 & TM2
4	Crimping terminal	M4, 1.5 mm^2	1	TM3
5	Crimping terminal	M4, 2.0 mm^2	1	TM4
6	Gasket	81TL10-9	1	Japan Jippaer-tubing
7	Cable	VCTF23NXS0.75SQ 4-core	1 set	
8	Cable	UL1015-AWG14	1 set	
9	Thermal tube		1 set	
10	Maker tube	ϕ 5.1	3	

Table 2.10.4b Necessary Component for AC Feed

Item	Component	Specification	Quantity	Remarks
1	Connector	RM15WTPZA-3S (72)	1	HIROSE or eqievalent
2	Crump	JR16WCC-11 (72)	1	HIROSE oe eqievalent
3	Crimping terminal	M4, 0.75 mm^2	2	TM1 & TM2
4	Crimping terminal	M4, 1.5 mm^2	1	TM3
5	Crimping terminal	M4, 2.0 mm^2	1	TM4
6	Gasket	81TL10-9	1	Japan Jippaer-tubing
7	Cable	VCTF23NXS0.75SQ 4-core	1 set	
8	Cable	UL1015-AWG14	1 set	
9	Thermal tube		1 set	
10	Maker tube	ϕ 5.1	3	

Accembling Procedure

Step-1: Gasket assembly

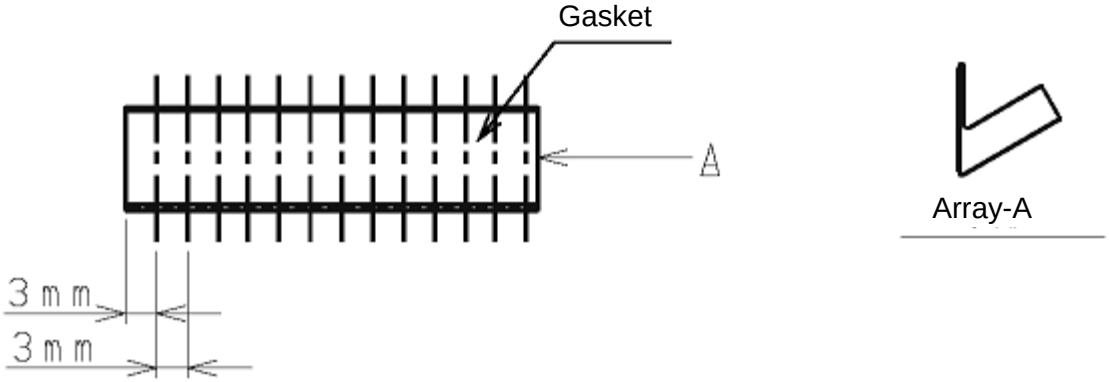

Step-2: Pre-assembly of CN1

Prior to connector assembly, crump, code can and thermal tube are through the cable.

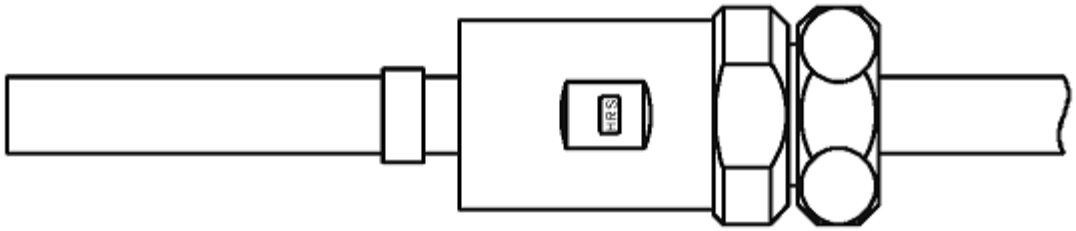

Step-3: Shield assembly of CN1 side cable

Skin the cable shield by 10 mm and wrap cupper tape.

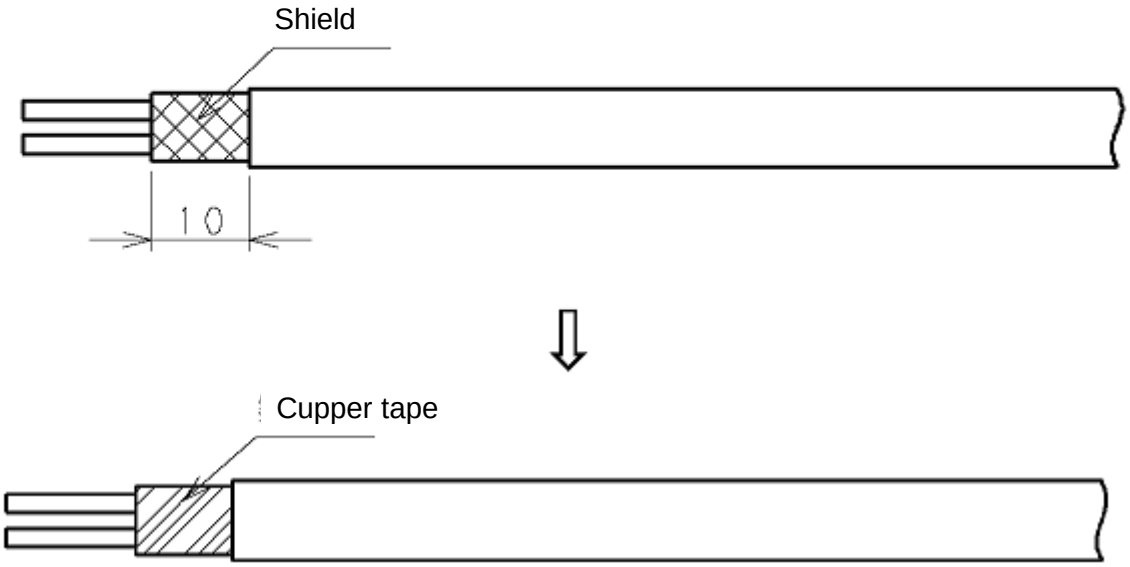

Step-4: Gasket Installation

Install seven (7) gaskets around the cupper tape.

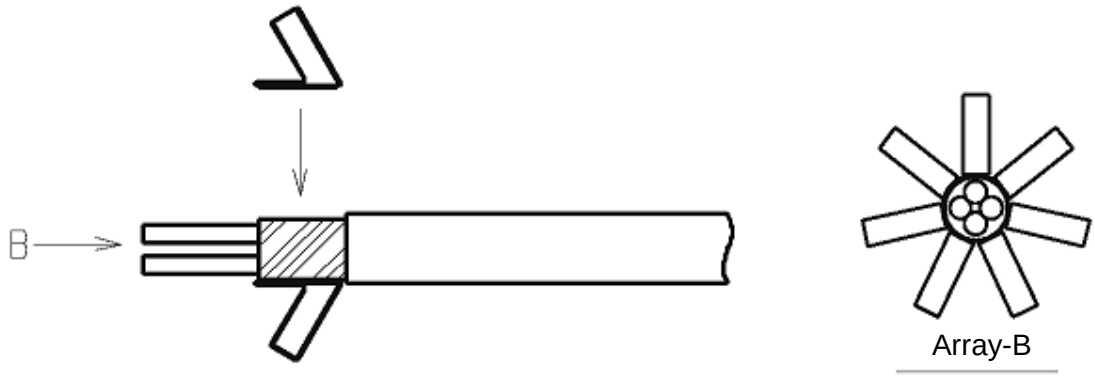

Step-5: Gasket Fixing

Put the thermal tape

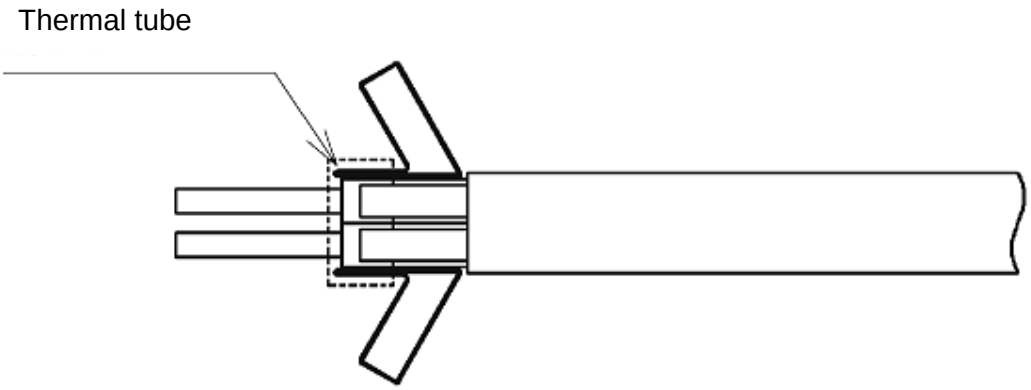

Step-6: Connection CN1 and cable

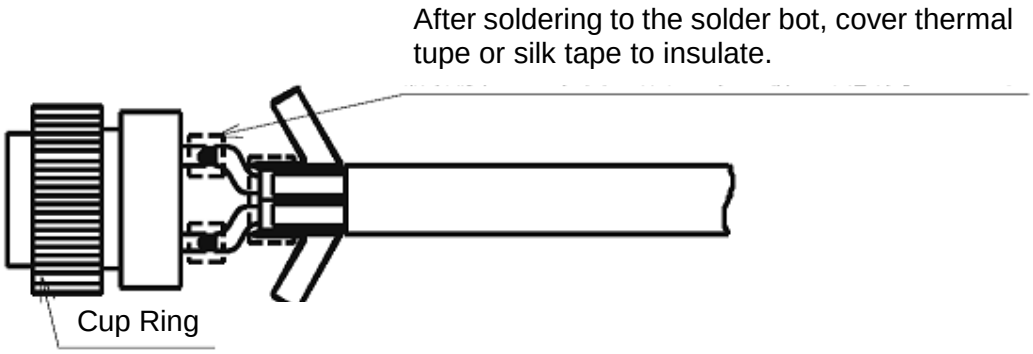

Step-7: Fitting thermal tube & silk tape

Fit the thermal tube between CN1 and cable.

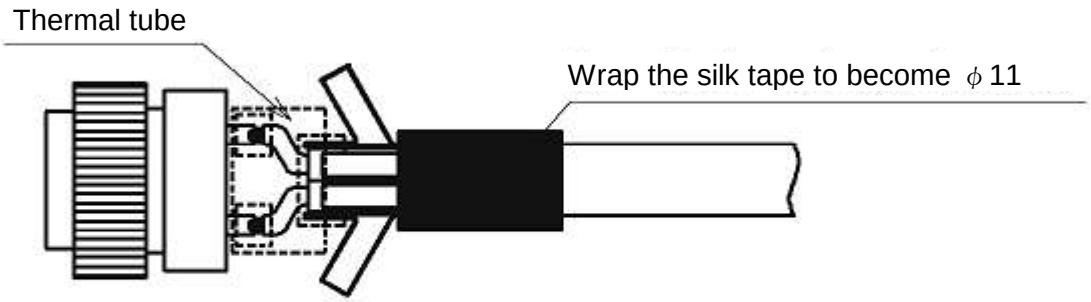

Step-8: CN1 Assembly

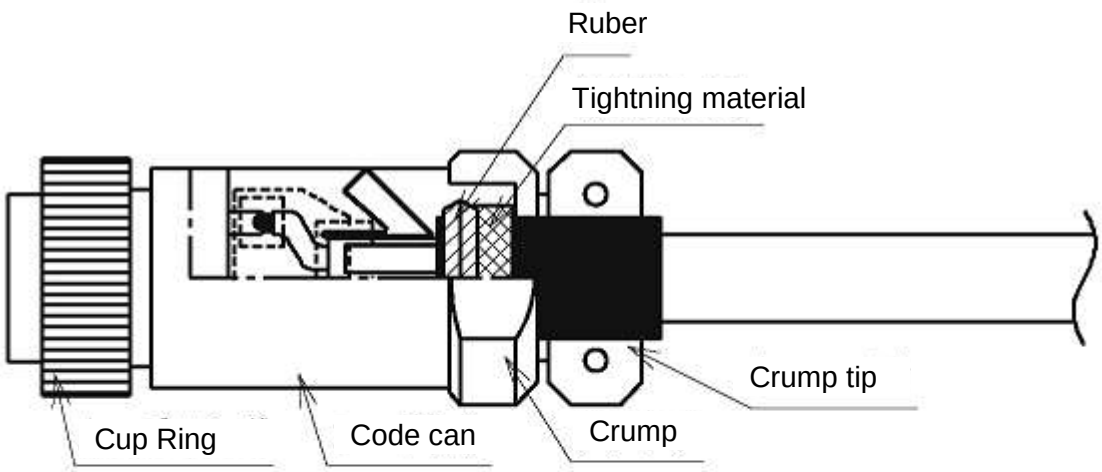

- Rated fixing torque for cup ring and code can is 3N/m.
- A part of male screw for code can is lock tight painted to prevent loose contact.
- Rated fixing torque for code can and crump is 3N/m.
- Crump and crump tip is fixed together with cable. Rated fixing torque of bolt is 0.3-0.35N/m.

Step-9: Wrap self-bonding insulating tape

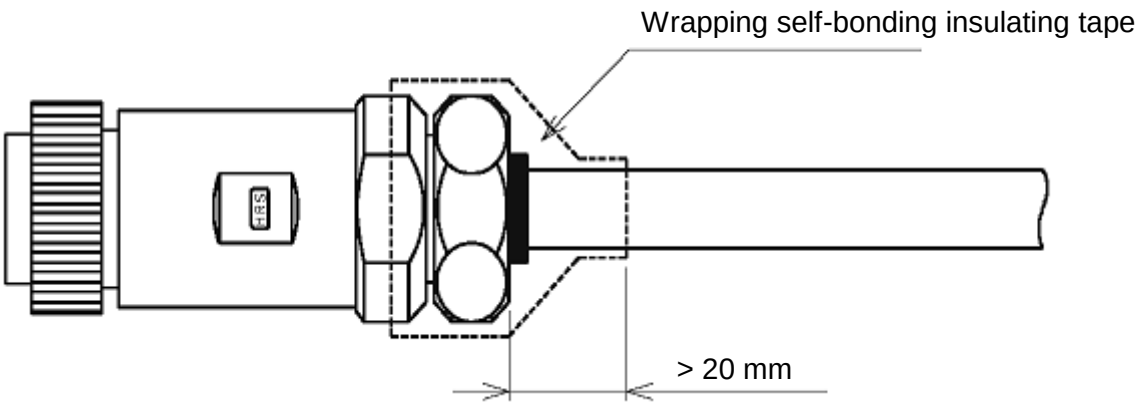

Step-10: Fitting thermal tape to the CN1

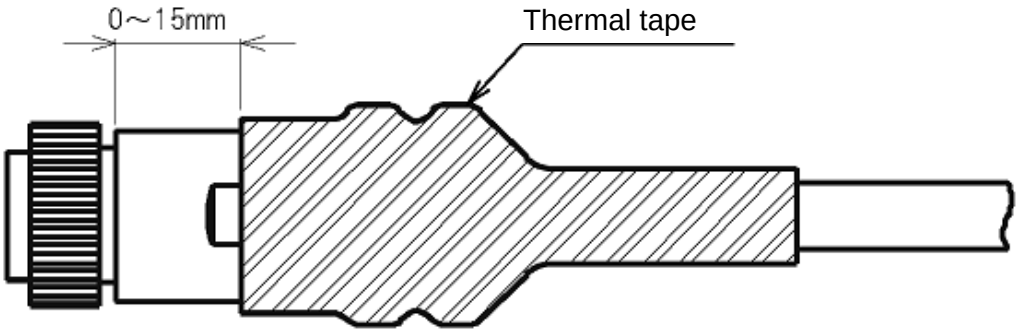

Step-11: Crump of TM1 to TM3

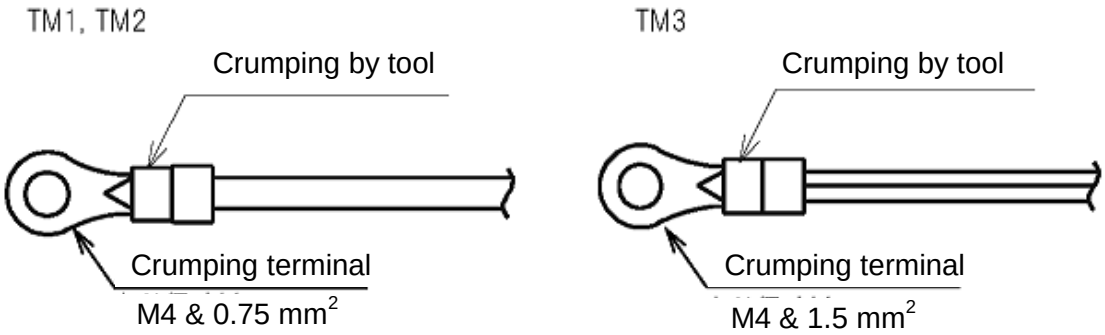

Step-12: Frame ground (FG)

One end of UL1007-AWG18 cable is skinned by 30 mm and soldered. Other end is skinned by 4.5 to 5 mm.

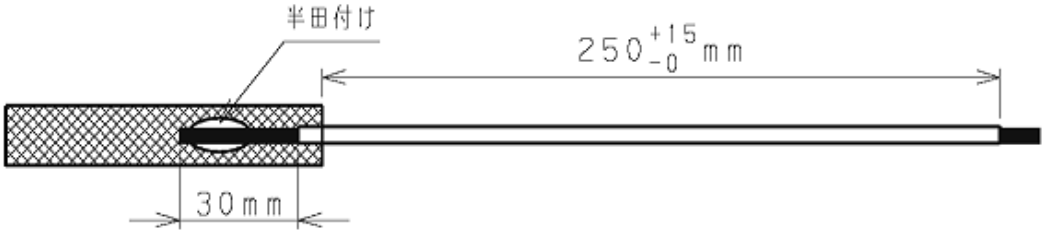

Step-13: Install FG cable to the cable

Skin the cable (10 mm) and FG cable is wrapped & soldered to the shield mesh.

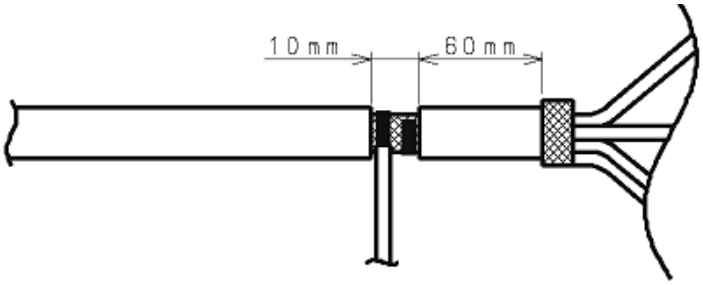

Wrap self-bonding insulating tape to the shield mesh part.

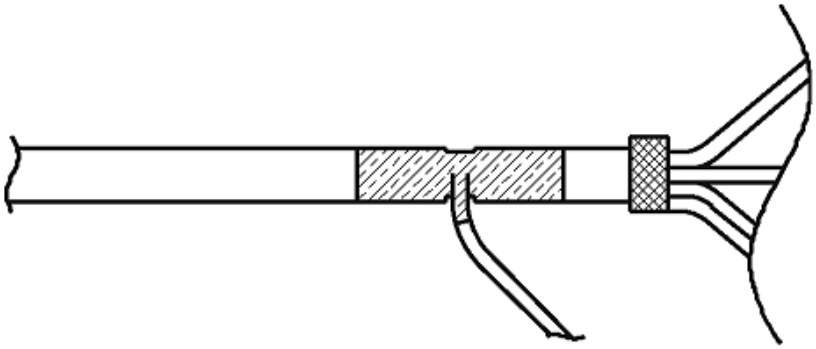

Step-14: Fit the thermal tape

Put the thermal tape covering self-bonding insulating tape.

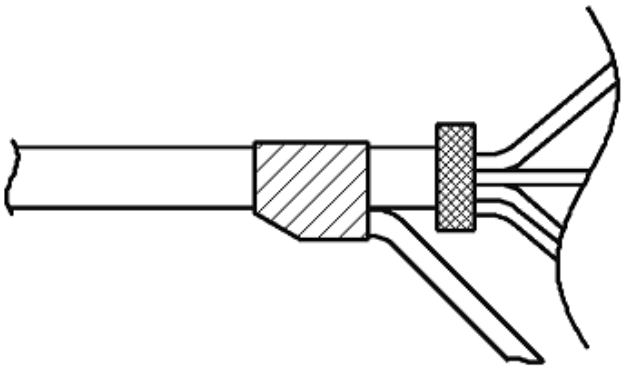

Step-15: Crump TM4

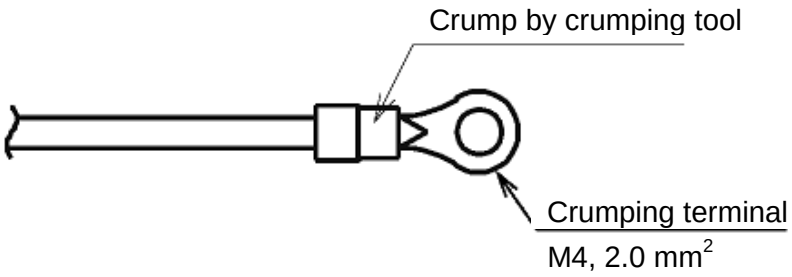

3 Commissioning Test

3.1 Overview

This chapter explains the antenna orientation and how to do the commission test for the GX4000 link. Main topics covered are;

- Preparation
- Antenna alignment guideline
- Antenna alignment procedure
- Continuity tests after antenna alignment
- Configuration setting (Provisioning)

3.2 Preparation

The following safety precautions must be observed when installing, using, or maintaining radio equipment. These precautions ensure the safety of all personnel and the protection of radio equipment.

Station and Hop Test Items

Table 3.2.1 Antenna Alignment & Commissioning Test Items

Task Name	Manual Reference	Notes
Preparation		
DC Power Supply ON	Section 3.3	
Open WebLT	Section 3.4	
Antenna Alignment		
TX power setting	Section 3.5	
Antenna alignment	Section 3.5	
Continuity Test		
Signal continuity Tests	Section 3.6	
Performance monitoring	Section 3.6	

Note: In case that test result is out of specification, please refer to Chapter 4 Maintenance and trouble shooting.

Measuring Instrument Required

The typical measuring instrument required to carry out the commissioning tests are as follows**;--**

- Multi-meter for power supply voltage and antenna alignment test
- PC for configuration setting & performance monitoring

3.3 Power Supply ON

- Remove PWR connector on ODU
- Set circuit breaker switch for ODU to ON.
- Confirm that DC power supply voltage on PWR connector;

  Voltage between Pin-1 (minus) and Pin-2 (plus)
  In case of DC power feed: within -48 V +/- 10%
  In case of AC power feed: within AC 100 V or AC 200 V +/- 10%

- Set circuit breaker to OFF.
- Connect PWR connector and set circuit breaker to ON

3.4 Starting WebLT

- Connect PC with MAINT connector (RJ-45 jack) on ODU.
- Start WebLT

For detailed starting WebLT, please refer to Chapter 5, Section 5.2.

3.5 Antenna Alignment Guideline

Introduction

One of the most important elements of a wireless system deployment is the antenna system. Proper alignment of that antenna system is critical to the performance of any wireless system. Engineering a wireless link for the highest achievable system gain while minimizing or eliminating the potential for interference will help reach the goal of high availability. There are two fundamental phases to this antenna alignment process:

- Pre-alignment or coarse-tuning;
- Final alignment or fine-tuning

Pre-Alignment

The pre-alignment phase involves settings on the antenna prior to installation and/or turn-on of the radio equipment. The final alignment includes all steps taken after the radio equipment have been installed and turned on.

Antennas have three adjustments for alignment:

- Polarization
- Azimuth (left and right)
- Elevation (up and down)

Coarse-tuning the antenna at time of antenna installation will ensure that adequate signal is available for the fine tuning phase of the installation.

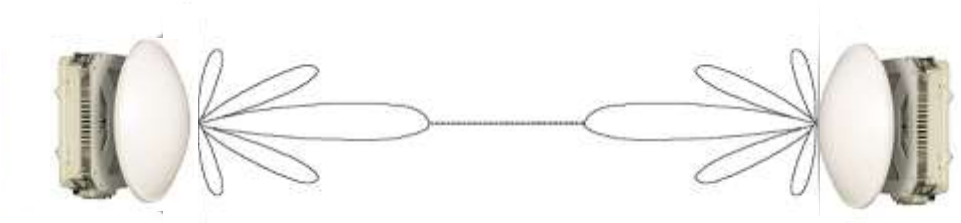

Good Alignment

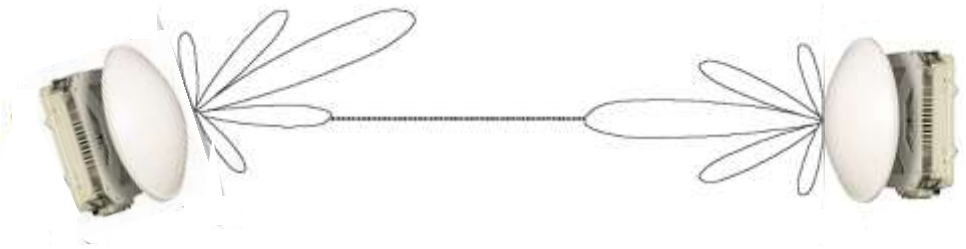

Bad Alignment

Polarization Pre-Alignment

Prior to raising the antenna to the tower or rooftop mounting position, the antenna polarization and ODU setting position should be verified and adjusted to correspond to Chapter 2, Section 2.5 Antenna Mounting.

Azimuth Pre-Alignment

Azimuth adjustment method uses binoculars or a spotting scope. Once the antenna is securely mounted at its permanent location on the rooftop or tower, coarse-tuning the azimuth is required so that sufficient signal is present for fine tuning.

For GX4000, the path length is short enough and conditions are clear, the distant end may be seen with a pair of binoculars or a spotting scope. The binocular or spotting scope is held against the top rim of the antenna adapter and the antenna is adjusted in azimuth so that the distant antenna is centered in the field of view of the binocular. Once the antenna is coarse tuned for azimuth, proceed to the elevation pre-alignment. Installation kit has azimuth adjust function having +/- 30 degree.

Elevation (Tilt) Pre-Alignment

In most cases, adjusting the antenna for vertical plumb (0 degrees elevation) is recommended for coarse-tuning the elevation adjustment. Installation kit also have a vertical elevation function having +/-15 degree.

If the above procedures are followed, the required final antenna adjustment will be minimal and the possibility of peaking on a side-lobe will be minimized. These coarse-tune adjustments can be conducted prior to the installation of E-Band radio equipment. When the equipment is installed and turned on, the final adjustment of the antenna is made.

Antenna Final Adjustment

Prior to the final adjustment of the antenna, RSL DC voltage monitoring on MON connector is applied to indicate when the antenna is adjusted to peak power. This method is typically a near-real-time reading. Changes in signal strength are immediately conveyed to the installer by variations in the DC voltage present at the RSL test point on the face plate of the radio. This type of reading allows for precise positioning of the antenna.

Since the antennas at both ends of the links have been coarse-tuned for azimuth, elevation and polarization, sufficient signal should be present to commence with the fine-tuning of the antennas.

While monitoring the receive signal level with a voltmeter, fine tune the azimuth and elevation for maximum receive signal. Perform the final tuning adjustments one end at a time. It is necessary for one antenna to be stationary while the other is being adjusted.

Figure 3.5 shows a sample of an RSL chart from GX4000. Note that as voltage decreases, signal strength increases. If the peak of the antenna pattern is broad and hard to find, then the antenna can be swung for equal signal strength drop off in each direction. The distance between these points can be measured in number of turns or distance. The final adjustment can be set to the half-way point between these two points.

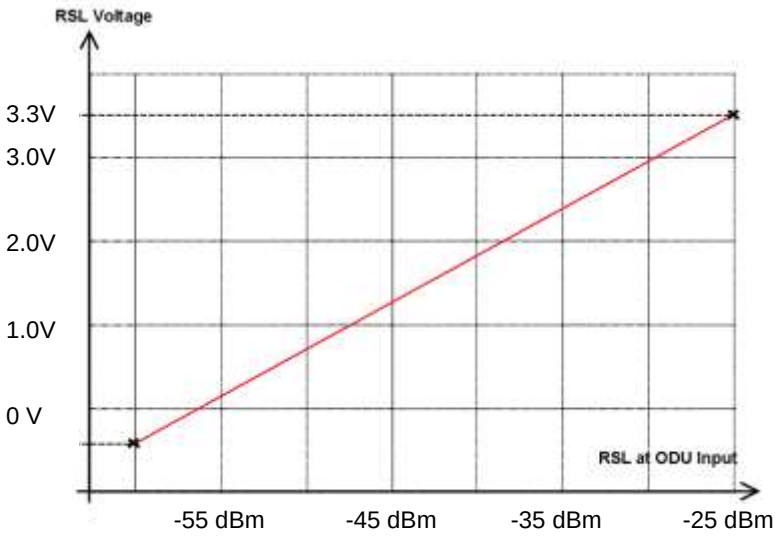

Figure 3.5 Typical RSL Chart

Once the antenna is set at peak level, tighten all adjustments and mounting hardware. Continue to monitor the RSL while doing this to ensure final tightening of the hardware has little to no effect on RSL.

The calculated receive signal strength should always be attained or exceeded. Repeat the procedure at both ends of the link until the calculated RSL is achieved. If the RSL is worse than the calculated value beyond +/- 2 dB after the above procedures, do the trouble shooting.

A lower than expected RSL is a defective transmission line or an obstructed path. Verify that calculated insertion loss through the transmission line is within limits and replace antennas or transmission system elements with known good devices until the fault is found.

Transmission Path Calculation

Parameter		Loss/Gain in dB
(1) Transmitter Output Power:		dBm
Antenna Gain	(2) TX side:	dB
	(3) RX side:	dB
(4) Free Space Loss: (= 32.4+20 log f + 20 log d), f/MHz, d/km		dB
(5) Calculated Received Signal Level: (1) + (2) + (3) – (4) = _____dBm		
(6) Measured Received Signal Level = _____dBm		
Difference: (6) – (5) = _____dB		

Where:

Transmitter output power:	0 to +10 dBm for 70/80 GHz band
Center frequency:	73,503 MHz for 70 GHz band
	83,494 MHz for 80 GHz band
Antenna gain:	43 dB for 1-feet (30 cm) antenna
	48 dB for 2-feet (60 cm) antenna

3.6 Antenna Alignment Procedure

Step-1: Connecting WebLT to ODU RJ-45 Jack

- Connect PC with ETH connector (RJ-45 jack) on ODU by LAN cable.
- Open WebLT

For detailed connection, refer to Chapter 5, Section 5.1.

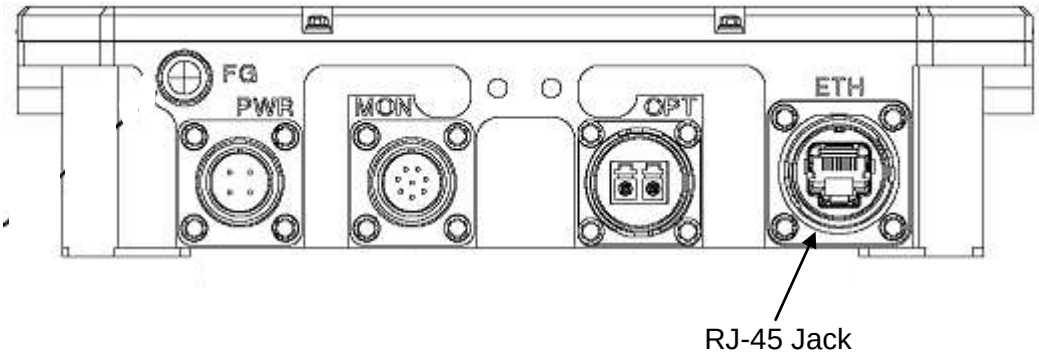

Step-2: IP Address Setting on WebLT

- Click Configuration > System > IP
- Set IP Address and IP Mask

IP Address: 192.168.0.1 (default)

IP Mask: 255.255.255.0

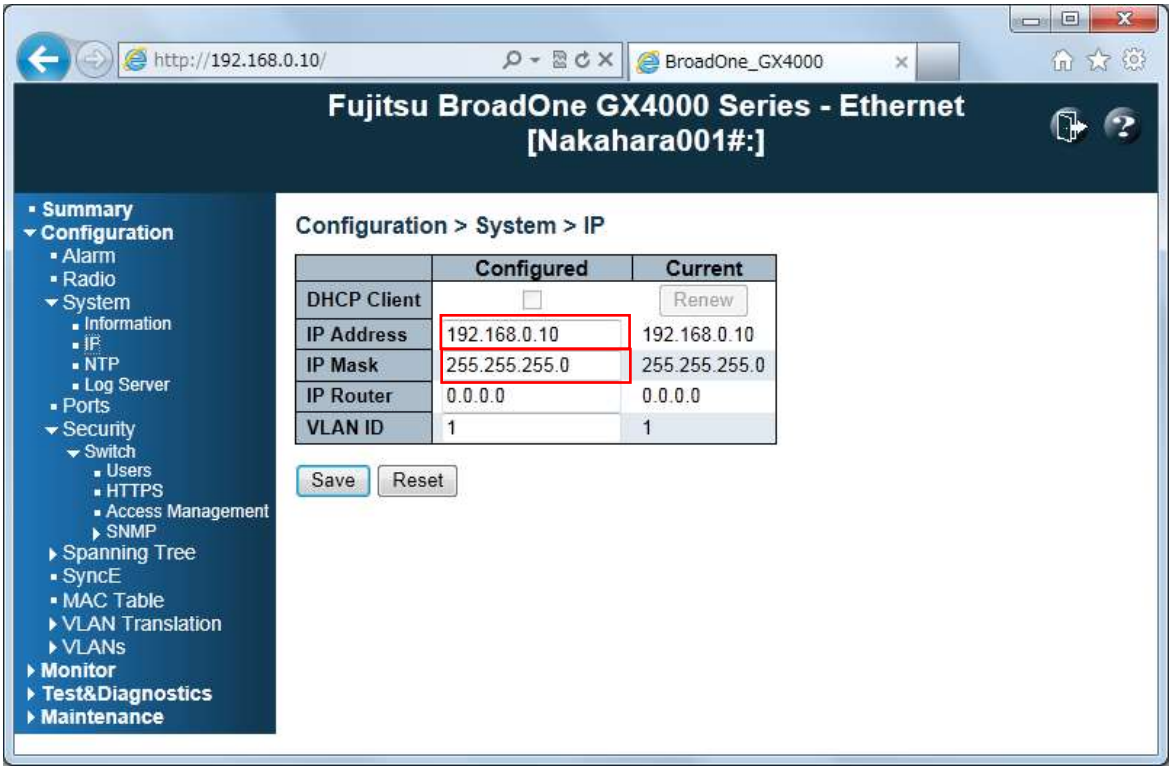

Step-3: Time Data Setting

- Click Configuration > System > NTP
- Input Year/Month/Day/Hour/Minute/Second and click to set.

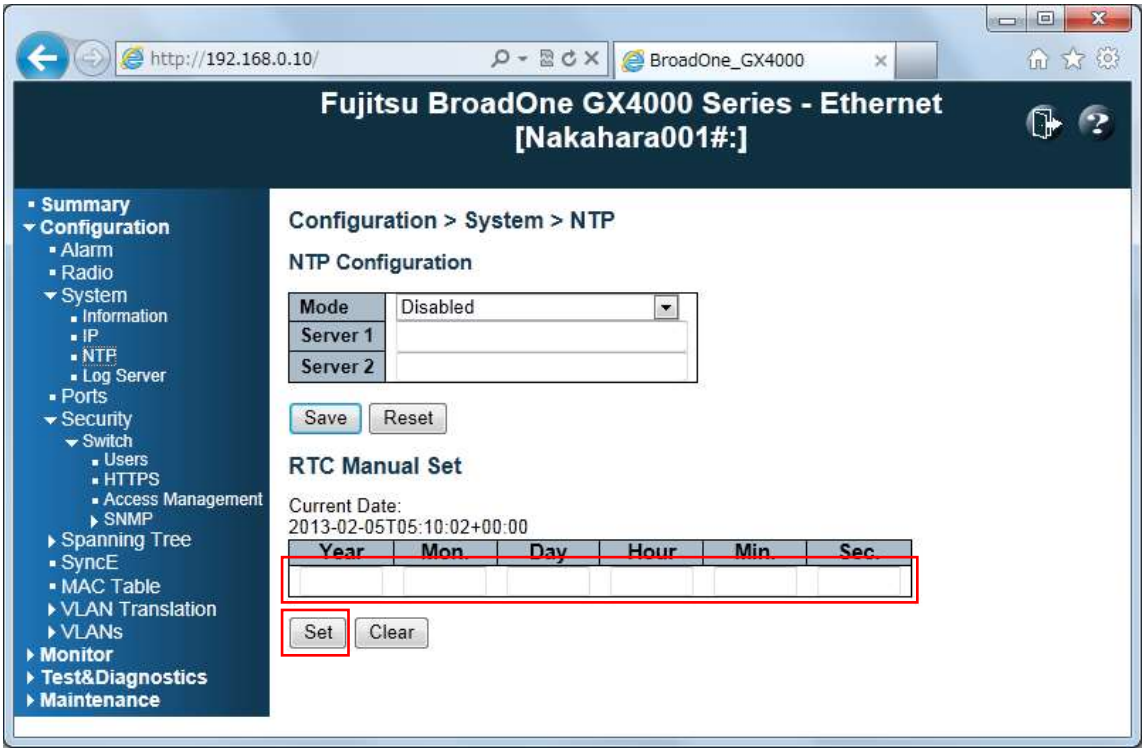

Step-4: Radio Parameter Setting

- Click Configuration > Radio
- Set Target Tx Power (dBm) to 10.0 and click to save.

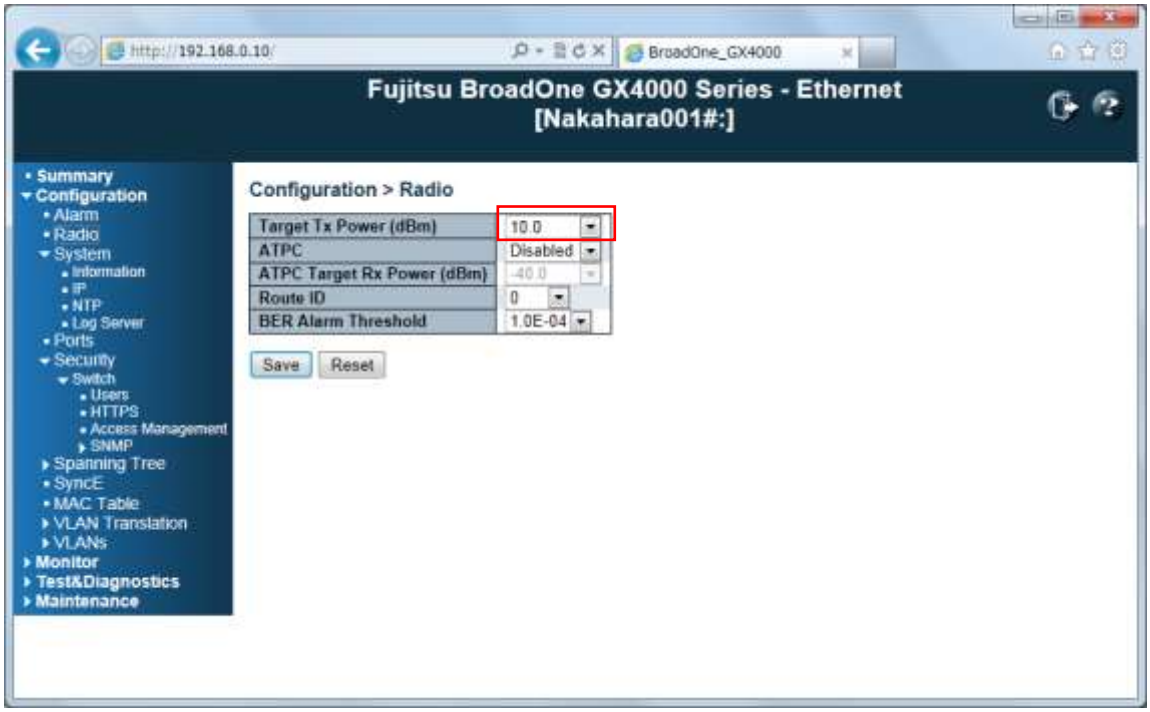

Step-5: Tx Output Power ON

- Click Test & Diagnostic > Control
- Click Release button and Tx-OFF turned to Tx-ON.
- TX output power is transmitted.

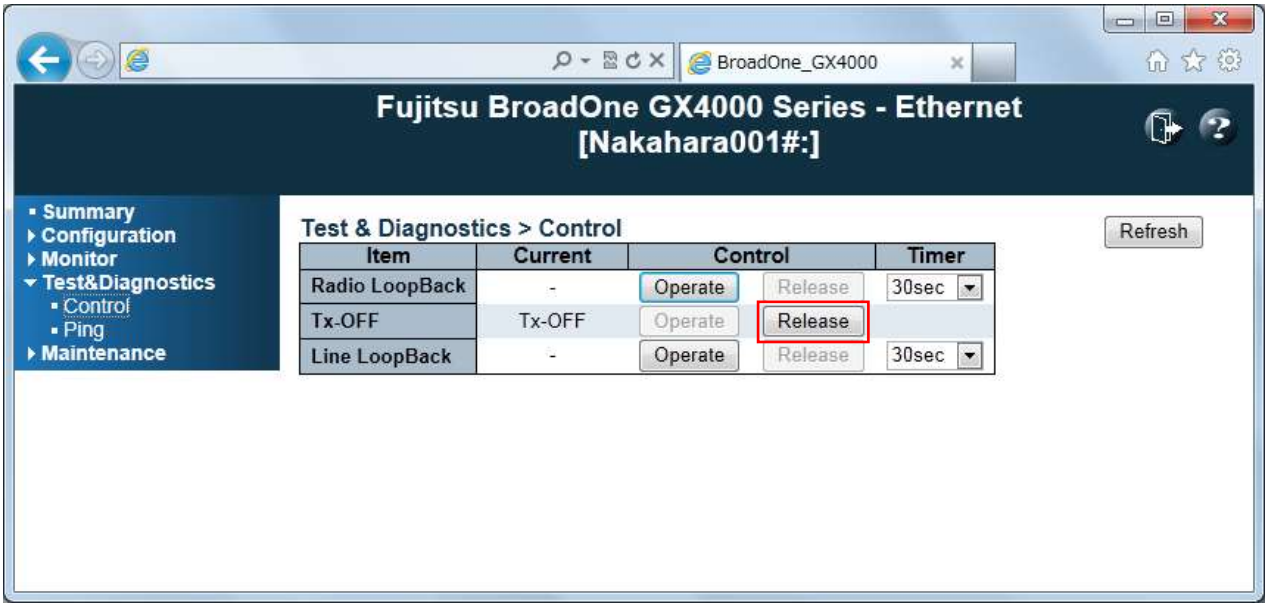

Step-6: Monitoring RSL on MON Connector

- Connect monitoring cable below with MON connector
- Confirm received signal level (RSL) using DC volt meter.

  Note: Monitoring DC voltage is 0 to +3.3 V depending on path length and monitoring voltage is not absolute value, but relative value.

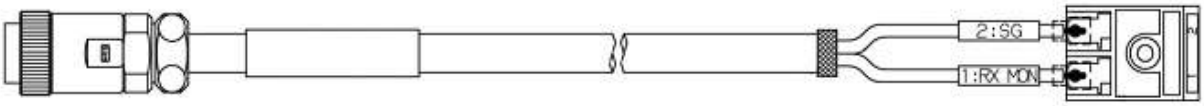

Step-7: Catching RSL from Far-end Site

- Verify that remote Tx power is operational and remote antenna is fixed.
- Rotate slowly the antenna in the azimuth direction (horizontal) and find the maximum RSL voltage.
- Rotate slowly the antenna in the elevation direction (vertical) until the RSL voltage is peak voltage and record the measured voltage.
- Repeat above procedure for three times and catch the peak RSL.
- Also repeat same procedure in the far-end station

Note: Half antenna beam bandwidth is approx.. 0.6 degree for 1-feet antenna and 1.0 degree for 2-feet antenna.

Antenna Adjustment in the Vertical Direction

- Loose elevation fixing bolts (x2)
- Adjust elevation angle by using elevation adjustment bolt.
- Fix using elevation fixing bolts after catching peak RSL.

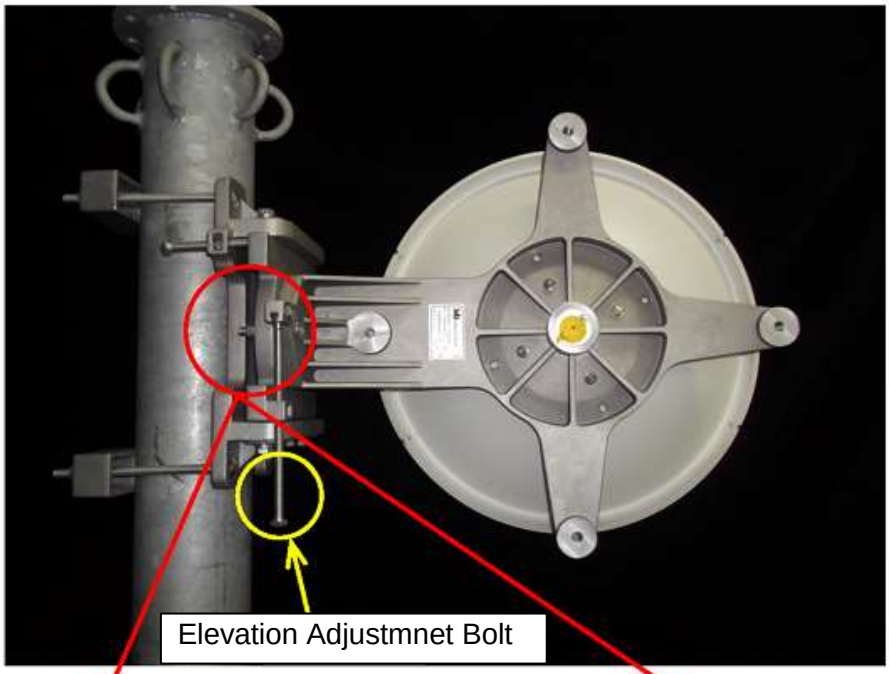

Elevation Fixing Bolt
(Antenna front side)

Elevation Fixing Bolt
(Antenna rear side)

Antenna Adjustment in the Holizontal Direction

- Loose azimuth fixing bolts (x6)
- Adjust azimuth angle by using azimuth adjustment bolt.
- Fix using elevation fixing bolts after catching peak RSL.

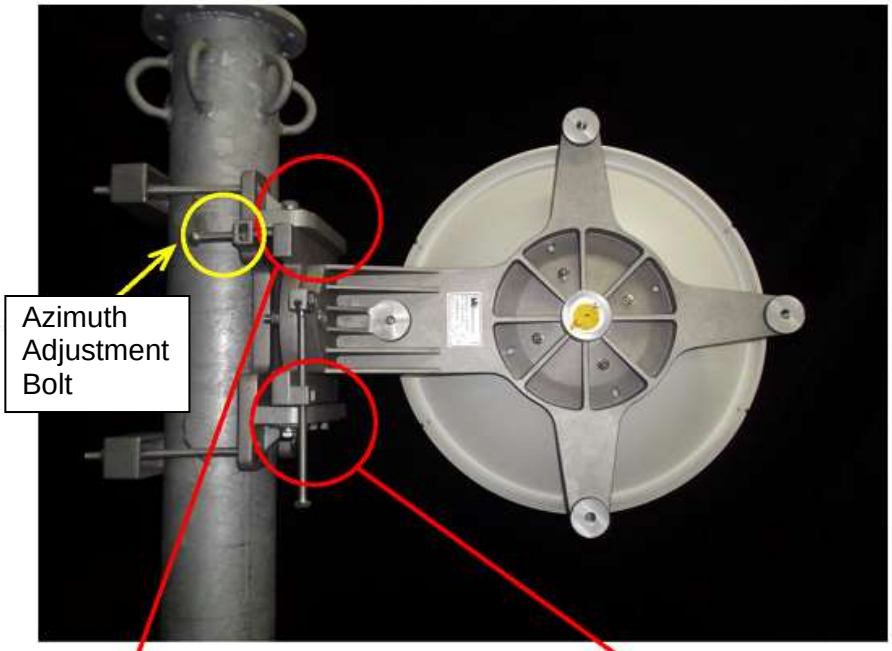

Azimuth Fixing Bolt
(Antenna upper side)

Azimuth Fixing Bolt
(Antenna lower side)

Step-8: Fix Antenna to the Mount Kit Tightly

- Fix antenna to the mount kit tightly after fine adjustment..

Note: Half antenna beam bandwidth is approx.. 0.6 degree for 1-feet antenna and 1.0 degree for 2-feet antenna.

3.7 Continuity Test after Antenna Alignment

- After antenna alignment, continuity test is carried out

Alarm Summary Indication

- Start WebLT and click Summary menu
- Check Alarm Summary and if Error, Warning and Info indication are issued, click Default Information button to indicate alarm description.

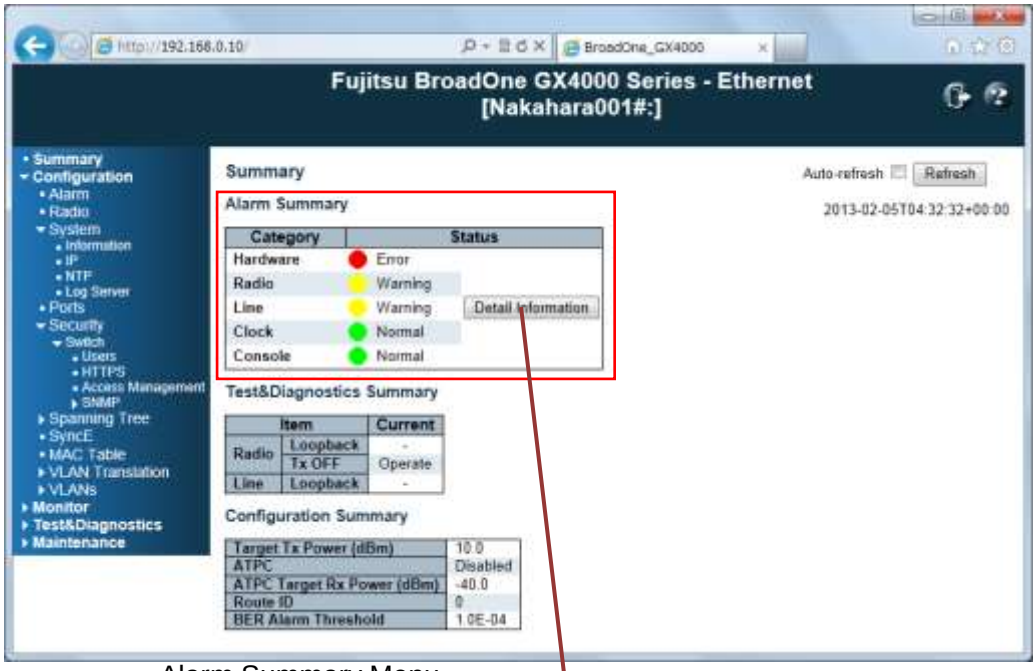

Alarm Summary Menu

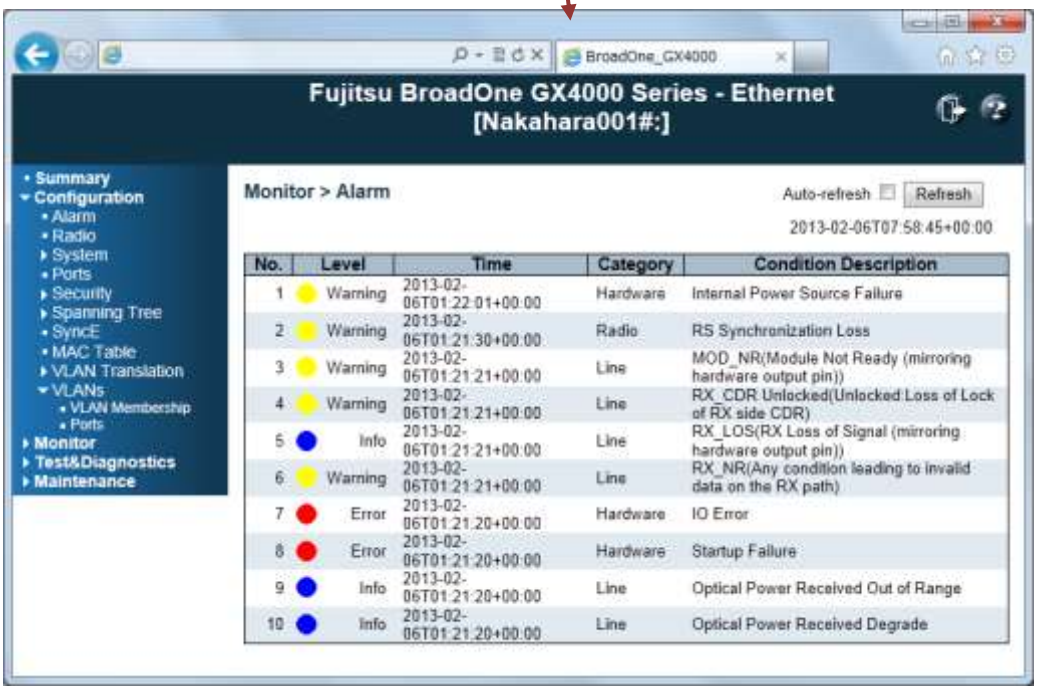

Alarm Breakdown List

- Do the troubleshooting from the alarm and severity as shown in Table 3.7.

Table 3.7 Alarm and Severity of Alarm Summary

No	Category	Cause Factor	Status Description	Level
1	Hardware	EQPT	Processor Failure	E
2		EQPT	Start-up Failure	E
3		EQPT	Internal Heath Check Failure	E
4		EQPT	Internal Clock Failure	E
5		EQPT	PLL Failure	E
6		EQPT	TX Block Failure	E
7		EQPT	XFP Optical Module Absence	E
8		EQPT	XFP Optical TX Block Failure	E
9		EQPT	SFP Optical TX Block Failure	E
10		EQPT	10G PHY Failure	E
11		EQPT	1G PHY Failure	E
12		EQPT	Internal Data Failure	E
13		EQPT	IO Failure	E
14		EQPT	FPGA Upload NG	E
15		EQPT	Software Upload NG	E
16		EQPT	FPGA Image Select NG	E
17		EQPT	FPGA Config Invalid (nStatus/CONF_DONE Invalid)	E
18		EQPT	Internal Power Source Failure	E/W/I
19		EQPT/ENVR	High Temperature	E/I
20		ENVR/ENVR	Laser Temperature High	E/I
21		ENVR	Low Temperature	W/I
22		ENVR	Laser Temperature Low	W/I
23		(MON INFO)	L2SW Failure	W
24		(MON INFO)	FPGA Config RAM CRC Failure	I
25	Clock	EXT	Sync-E PLL DPLL0 UNLOCK	W
26		EXT	Sync-E PLL DPLL1 UNLOCK	W
27		EXT	Sync-E PLL DPLL0 HOLDOVER	W
28		EXT	Sync-E PLL DPLL1 HOLDOVER	W
29	LINE	EQPT	Optical Power Transmitted Out of Range	E
30		EXT	External Clock Degrade on Sync Ethernet Line	W
31		EXT	External Clock Degrade on Sync Ethernet CRPI	W
32		EXT	External Clock Degrade on Sync Ethernet L2SW	W
33		EXT	XFP RX_NR (Any condition leading to invalid data on the RX path)	W
34		EXT	XFP RX_LOSS (mirroring hardware output pin)	I
35		EXT	XFP RX_CDR Unlocked (Unlocked: Loss of Lock of RX side CDR)	W
36		EXT	XFP MOD_NR (Module Not Ready (mirroring hardware output pin)	W
37		EXT	10G PHY SIDE-MAC Transmit FIFO Underrun	W
38		EXT	10G PHY SIDE-Transmit Frame Abort	W
39		EXT	10G PHY SIDE-RX Symbol Error Count	W
40		EXT	10G PHY SIDE-RX Unsupported Opcode Count	W
41		EXT	10G PHY SIDE-RX CRC Error Count	W
42		EXT	10G PHY SIDE-RX Undersize Count	W
43		EXT	10G PHY SIDE-RX Undersize with CRC Error Count	W
44		EXT	10G PHY SIDE-RX MAC Client Data Length Mismatch Regal Length Field	W
45		EXT	10G PHY SIDE-RX Oversize Count	W
46		EXT	10G PHY SIDE-RX Oversize with CRC Error Count	W
47		EXT	Optical Power Received Degrade	W/I
48		EXT	Optical Power Received Out of Range	W/I
49		EXT	SFP RX_LOSS (RX Loss of Signal, mirroring hardware output pin)	I
50		MON INFO	LINE XAUI Packet Discard	W
51		MON INFO	LINE XAUI Packet Overflow	W
52		MON INFO	Optical Power Transmitted Degrade	W
53		MON INFO	Line Loopback Test	I

Table 3.7 Alarm and Severity of Alarm Summary (Cont'd)

No	Category	Cause Factor	Status Description	Level
54	RADIO	EXT	External Clock Degrade on Sync Ethernet Radio	W
55		EXT	Radio Overhead Parity Error	W
56		EXT	RF XAUI Packet Discard	W
57		EXT	RF XAUI FCS Error	W
58		EXT	RF XAUI Abnormal Length Packet Discard	W
59		EXT	Radio BER Alarm	W
60		EXT	RS Synchronization Loss	W
61		EXT	RF Power Received Out of Range	W
62		EXT	RF Route ID Fail	W
63		(MON INFO)	RF Power Transmitted Out of Range	W
64		(MON INFO)	Auto Level Control Failure	W
65		(MON INFO)	Auto Gain Control Failure	W
66		(CONT INFO)	Radio Loopback test	I
67		(CONT INFO)	Radio TX OFF Test	I
68	Console	EXT	MII Status Auto-Negotiation Complete NG	W
69		EXT	MII Status Remote Fault	W
70		EXT	MII Status Link Status NG	W
71		EXT	MII Status Jabber Detect	W
72		EXT	1000BASE-T Status Master/Slave Configuration Fault	W
73		EXT	1000BASE-T Status Remote Receiver Staus NG	W
74		EXT	1G-PCS Synchronization Has Been Lost	W
75		EXT	1G-RX Symbol Error Count	W
76		EXT	1G-RX Unsupported Opcode Count	W
77		EXT	1G-RX CRC Error Count	W
78		EXT	1G-RX Undersize Count	W
79		EXT	1G-RX Undersize with CRC Error Count	W
80		EXT	1G-RX MAC Client Data Length Mismatch Regal Length Field	W
81		EXT	1G-RX Oversize Count	W
82		EXT	1G-RX Oversize with CRC Error Count	W

Test & Diagnostic Summary Indication

- Click Test & Diagnostics > Control
- Confirm all current information are "-".

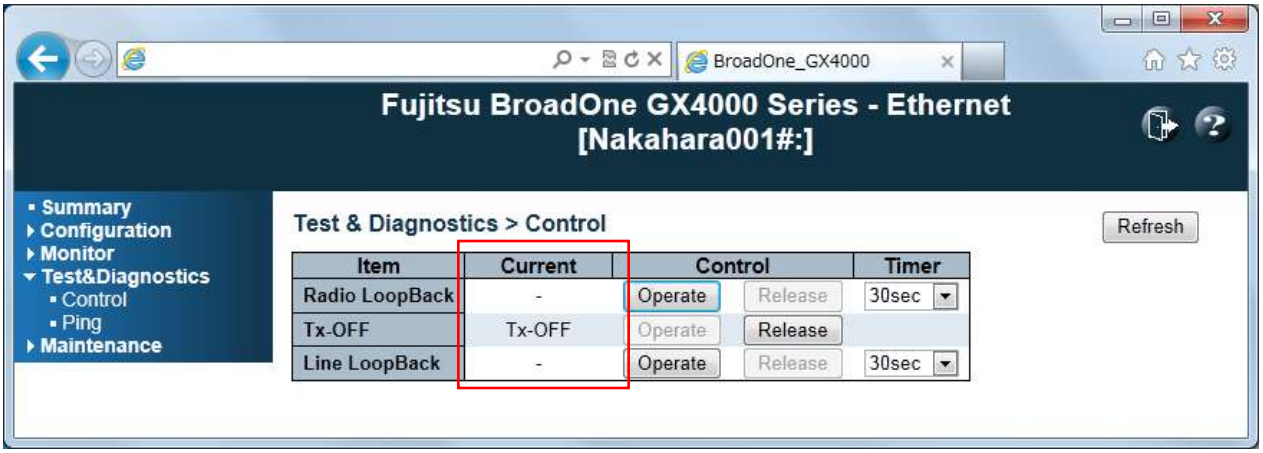

Confirm that Current of Tx-OFF is "-" and Control of Tx-OFF is "Operate".

Confirmation of RSL

- Click Monitor > Radio Performance > Current

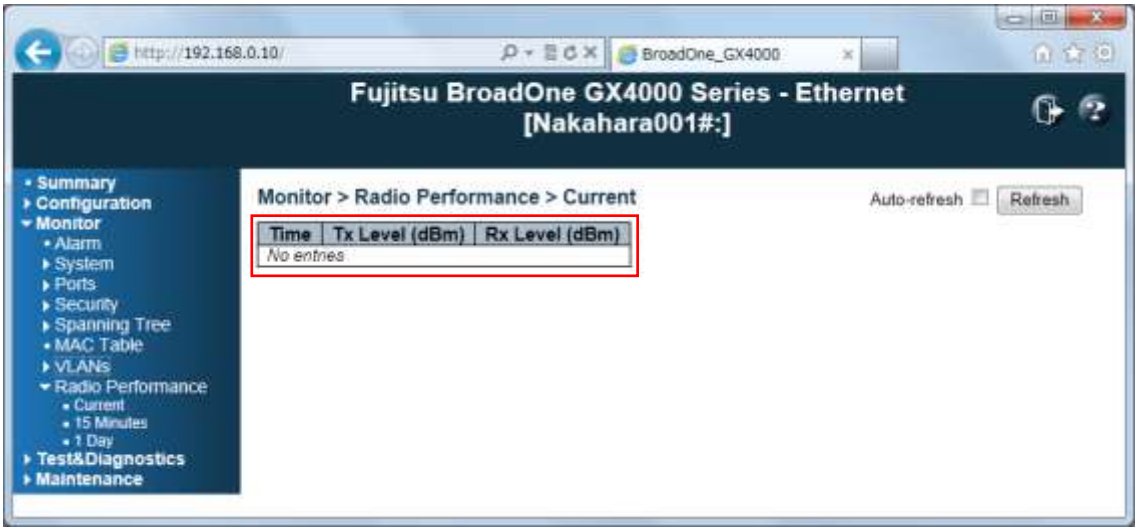

Radio Performance Current

- Confirm Current value.

Item	Parameter	Specification
Tx Level (dBm)	TX output power	Setting value +/- 3 dB
Rx Level (dBm)	Received Signal Level	System design value +/- 3 dB

- If Rx Level current value is out of specification, do the trouble shooting.

Confirmation of 15 Min Performance

- Click Monitor > Radio Performance > 15 Minutes

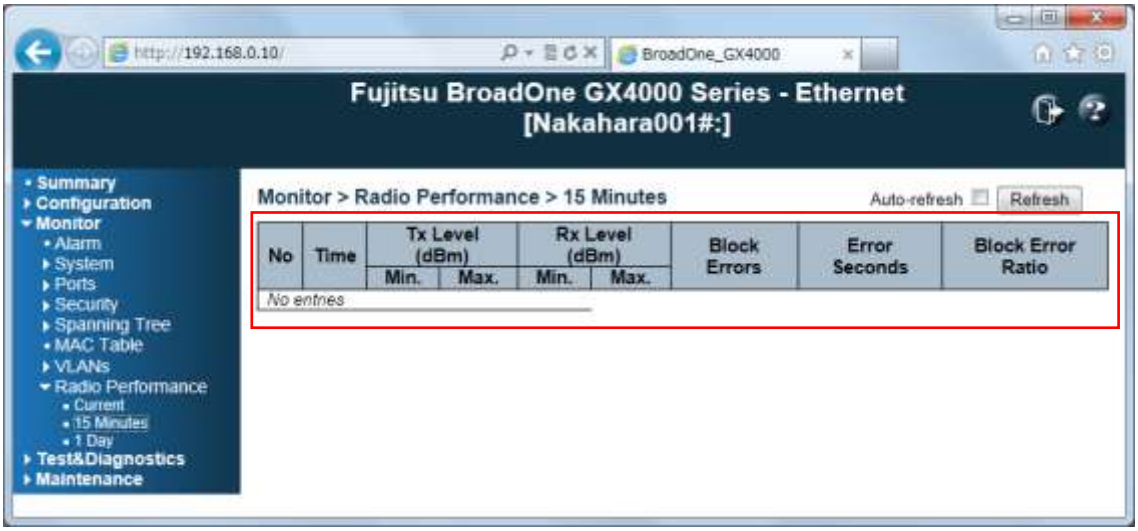

- Confirm 15 Minute performance.

Item		Parameter (15min interval)	Specification
Tx Level (dBm)	Min.	TX power (Min.)	Setting value +/- 3 dB
	Max.	TX power (Max.)	Setting value +/- 3 dB
Rx Level (dBm)	Min.	RSL (Min.)	System design value +/- 3 dB
	Max.	RSL (Max.)	System design value +/- 3 dB
Block Error			0
Error Seconds			0
Block Error Ratio			0

- If 15 minutes performance is out of specification, do the trouble shooting.

3.8 Applicable/Not Applicable of Menu Tree Item

- Configuration setting on WebLT is carried out after completion of continuity test satisfactorily.
- For detailed configuration setting procedure, please refer to Chapter 5 WebLT.

Applicable/Not applicable configuration setting for GX4000 Ether and GX4000 CPRI is shown below;

Menu Tree Item	GX4000 Ether	GX4000 CPRI
Summary	A	A
Configuration > Alarm	A	A
Configuration > Radio	A	A
Configuration > System	A	A
Configuration > Port	A	NA
Configuration > Security > Switch > Users	A	A
Configuration > Security > Switch > HTTPS	A	NA
Configuration > Security > Switch > Access Management	A	NA
Configuration > Security > Switch > SNMP	A	NA
Configuration > Spanning Tree	A	NA
Configuration > SyncE	A	NA
Configuration > Sync	NA	A
Configuration > MAC Table	A	NA
Configuration > VLAN Translation	A	NA
Configuration > VLANs	A	NA

A: Applicable, NA: Not applicable

And also applicable/not applicable Monitor/Test & Diagnostics/ Maintenance menu items are listed below;

Menu Tree Item	GX4000 Ether	GX4000 CPRI
Minitor > Alarm	A	A
Monitor > System	A	A
Monitor > Ports	A	NA
Monitor > Security	A	NA
Monitor > Spanning Tree	A	NA
Monitor > MAC Table	A	NA
Monitor > VLANs	A	NA
Monitor > Radio Performance	A	A
Test & Diagnostics	A	A
Maintenance > Restart Devices	A	A
Maintenance > Factory Default	A	A
Maintenance > Software	A	A
Maintenance > FPGA	A	A
Maintenance > Configuration	A	A
Maintenance > Data	A	A

A: Applicable, NA: Not applicable

3.9 Optional Telescope

3.9.1 Fixing Material (GX4K80ADMK)

- Two types for 1-feet and 2-feet casegrain antennas available
- Open sight (V-gap) and peep sight (round hole) for sighting device use

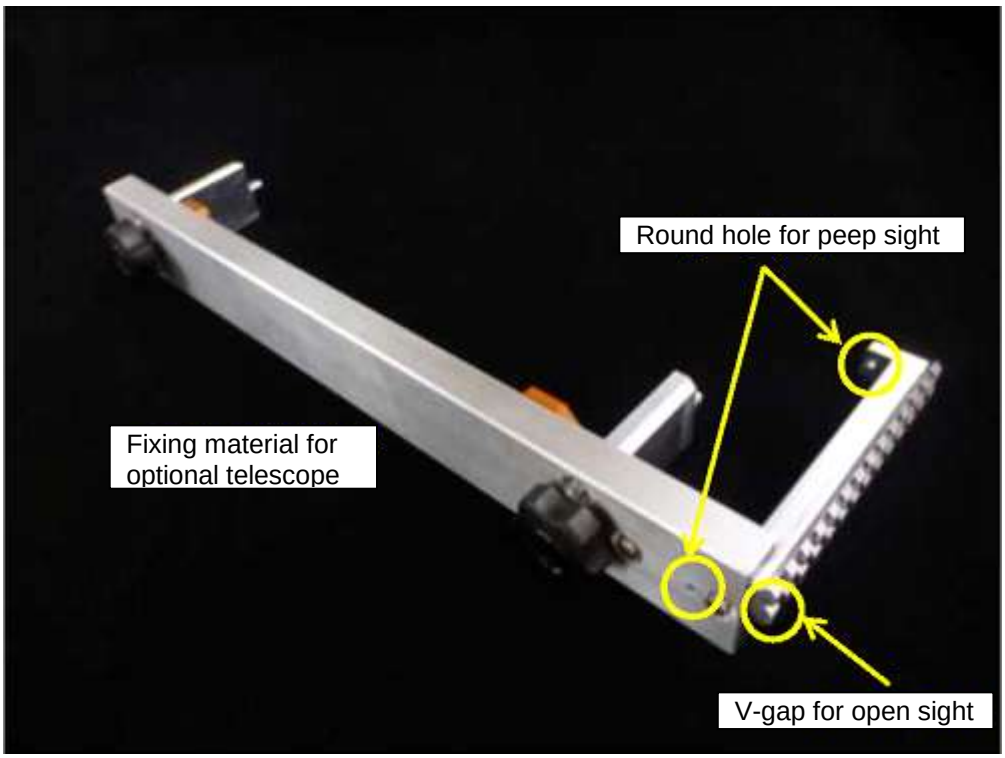

3.9.2 Telescope (GX4K80ADSD)

- Magnification 3 to 9 and tube diameter 1 inch
- Mount ring for 20 mm rail correspondence included

3.9.3 Installation of Telescope

NOTICE

- DO NOT LOOK directly at the sun, car headlight or bright lighting equipment. It may adversely affect eyes.

NOTE

- Do not use under rain, under water and the place with much dust.
- The resolution and the remodelling are prohibited.
- Unreasonable zooming and forcusing prohibited
- Washing in water prohibited
- Storage where gets the direct rays of the sun and in the car prohibited

STEP-1: Mount Ring Resolution

- Resolute mounting ring by hexagon wrench

STEP-2: Installing Mount Ring to the Mount Rail

- Install mount ring to the mount rail loosely.

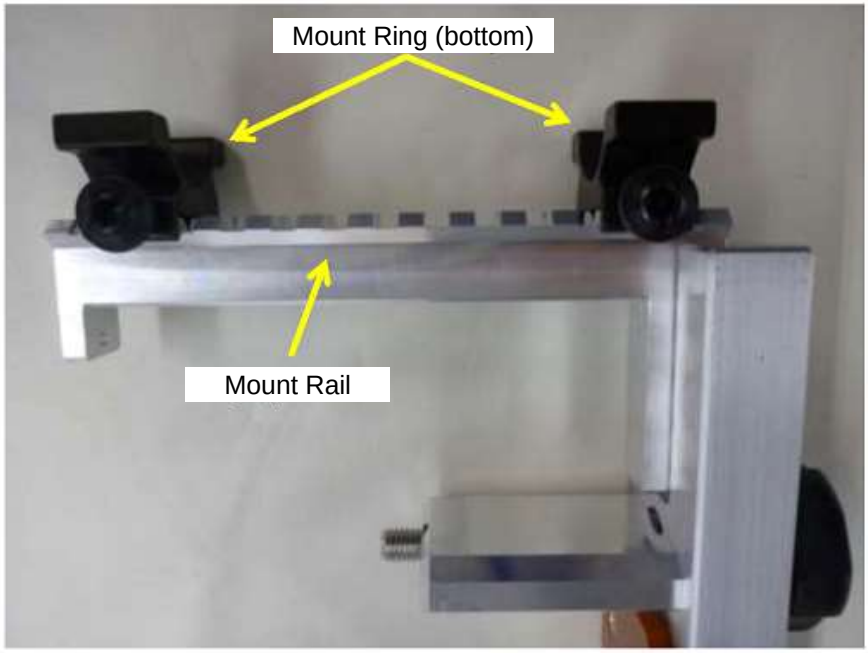

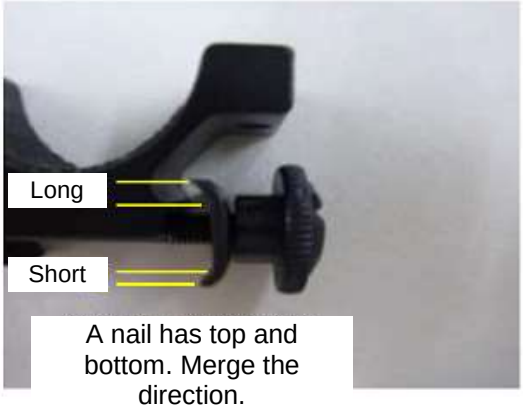

STEP-3: Installing Telescope on Mount Ring

- Put telescope on the mount ring parallet to the mount rail.
- Look in the telescope and set the telescope to adjust reticle

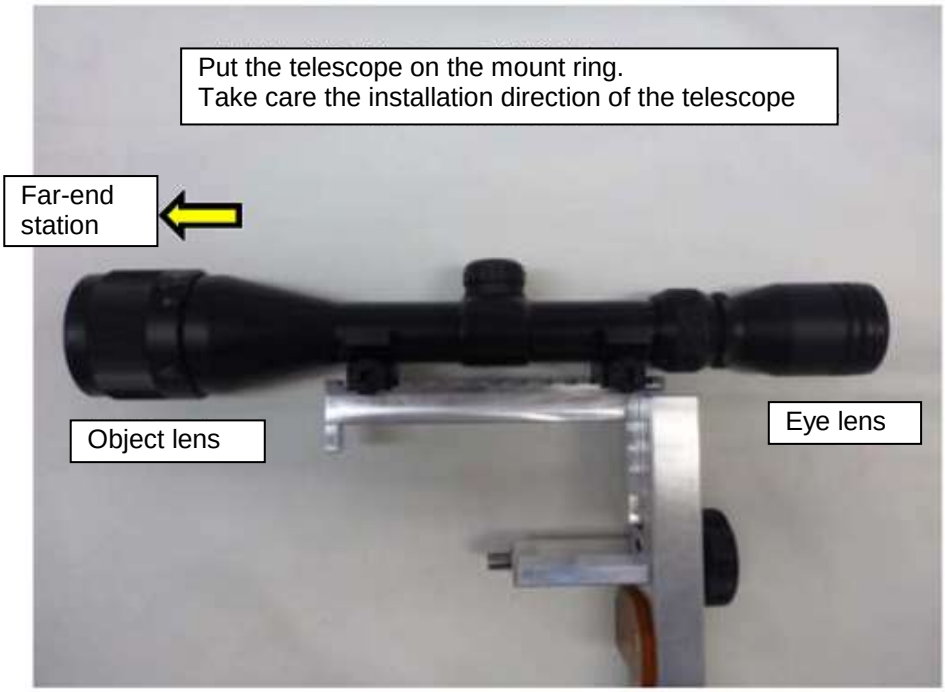

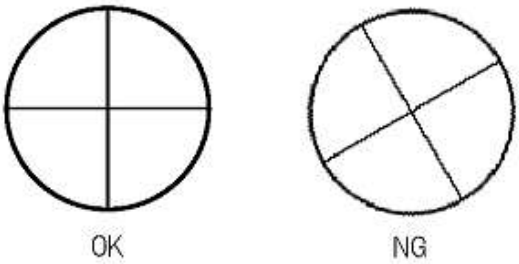

STEP-4: Fixing Telescope on Mount Ring Tightly
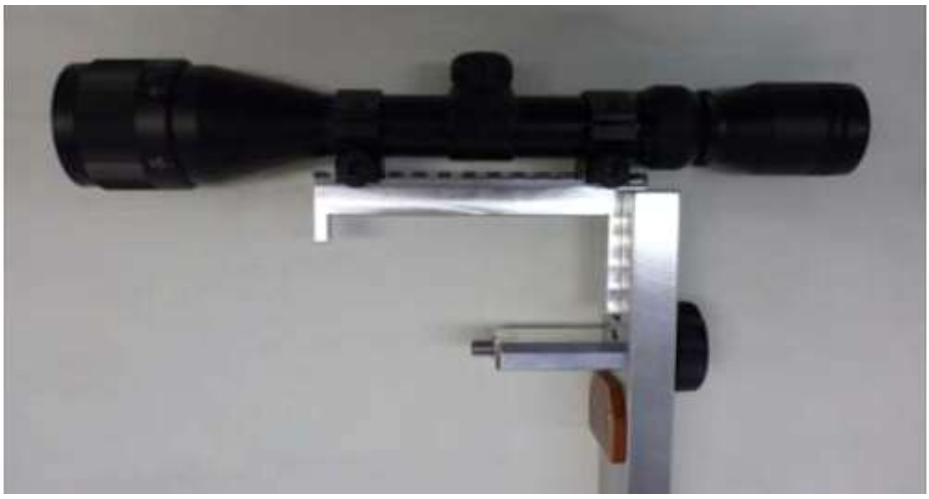
- After position setting, fix mount rig bottom tightly.
- Cover mount ring top and fix mount ring top and bottom.
- Fix mount ring top and bottom smoothly right and left in turn.
- Fix mount ring and telescope tightly