# Honeywell

## BLUETOOTH 5.0 LITE MODULE

Bluetooth

### HPN: PDK-R0010-SDE

Honeywell's Bluetooth 5.0 lite module and reusable block is an inexpensive and compact Bluetooth 5.0 solution. It is based on Nordic's nRF52832 chip.

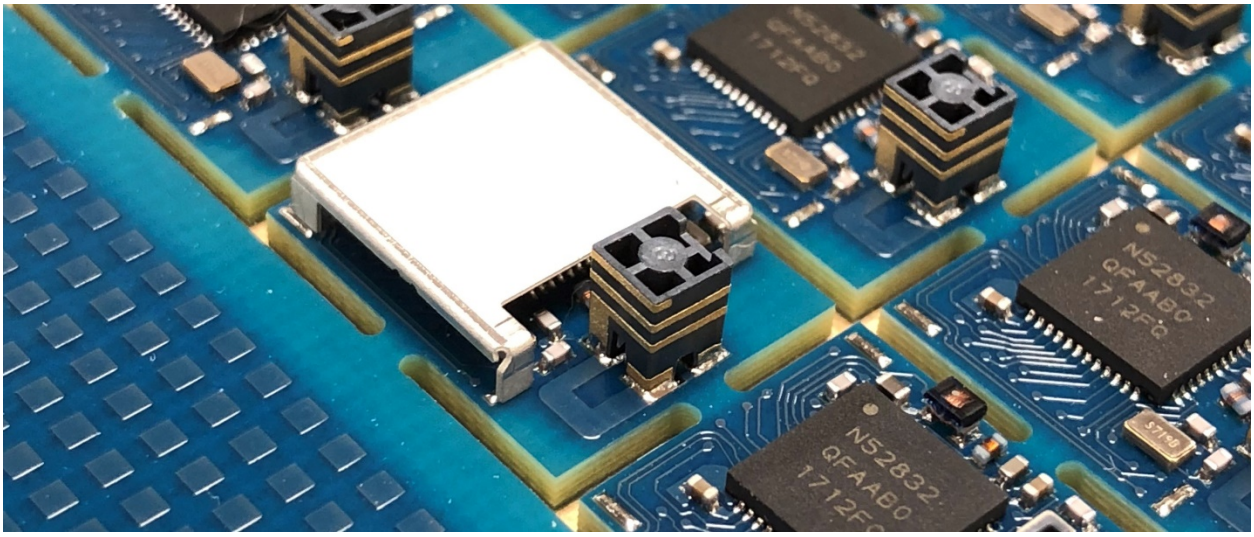


### KEY FEATURES

- nRF52832 Chip Cortex-M4f 32-bit, 64 MHz, 512kB flash, 64kB RAM
- Compact: 12mm by 12mm (0.472" by 0.472"). 12mm by 15mm with on board antenna
- $ Two layer PCB. Non HDI. 4.5mil minimum trace/gap
- $ 0402 or bigger caps & inductors
- $ Standard 8 and 12 mil vias. No microvias, no buried and no blind vias
- High and Low frequency crystals installed
- Type 2 NFC-A tag supported
- Connects to external antenna

### BLOCK DIAGRAM

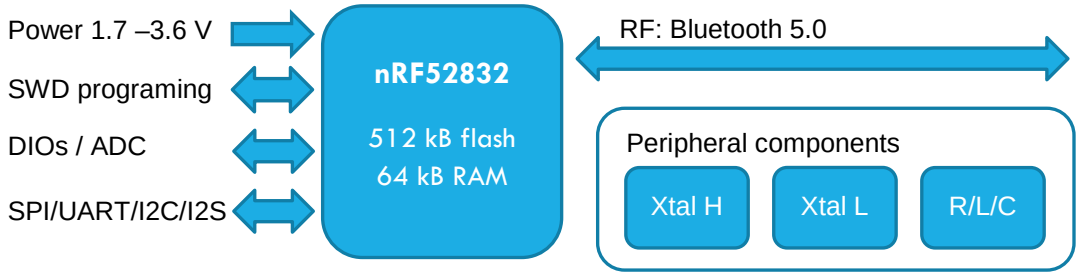

## RF CONNECTIVITY:

- All four Bluetooth 5 modes (central, peripheral, observer, broadcaster)
- ANT protocol
- Proprietary GFSK
- NFC-A

The stack is software defined and called Nordic SoftDevice.

More info: http://infocenter.nordicsemi.com

## PLACING MODULE ON HOST BOARD

Step 1: From DX designer, connect to xDM library

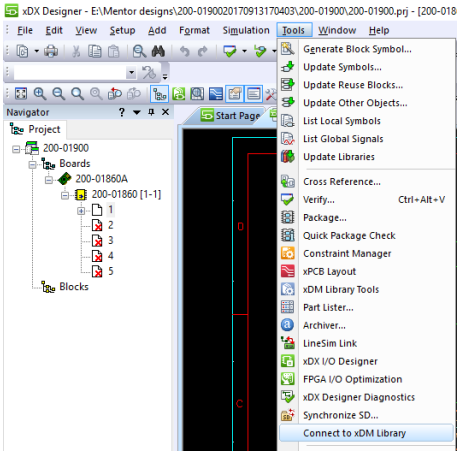


Step 2: Search, select and instantiate

Part 100-07142-REV2 is the footprint for all drop-in modules and includes pads and traces to 20 GPIOs:

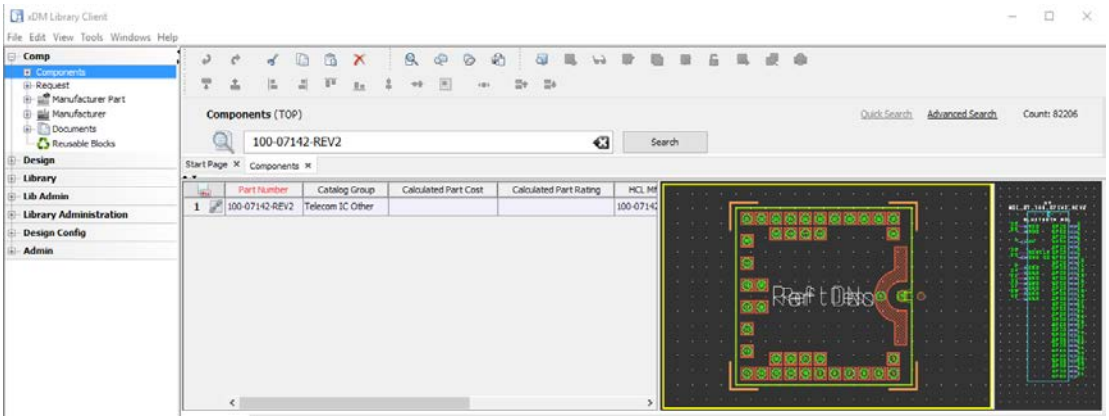


Part PDK-R0010-RBX is a reusable block with the basic components

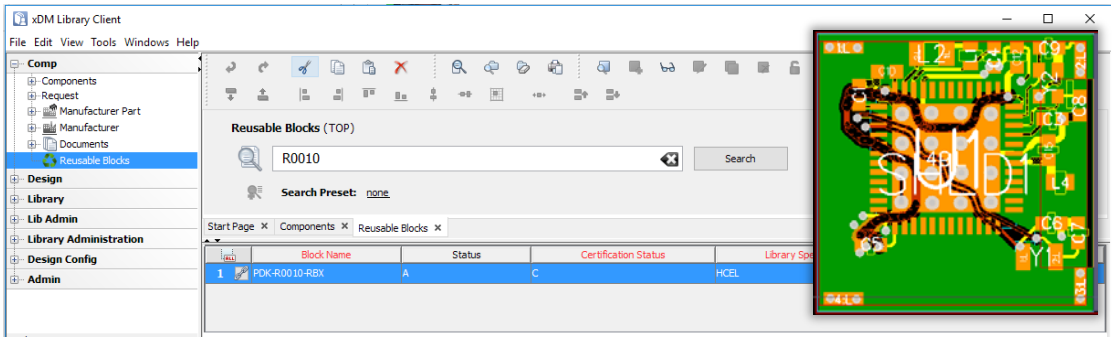

## COEXISTANCE

Nordic continuously expands their coexistance capabilities. Please check the latest softdevice documentation for the latest coexistance functions

The below Coexistance functions are implemented as of Nov 2017

### COEXISTANCE: MUTING

The TX power can be reduced to -40dBm when required. (complete muting is not supported as of Nov 17)

#### THROUGH SOFTDEVICE:

Call

**`sd_ble_gap_tx_power_set(-40)`** to set the power to -40dBm

**`sd_ble_gap_tx_power_set(4)`** to set the power to +4dBm

The above functions can be triggered by any event handler like a GPIO state

#### THROUGH REGISTER ACCESS

If you would like to bypass the stack, you can write directly to the register that configures the TX power

### 23.14.10 TXPOWER

Address offset: 0x50C

Output power

| Bit number | | | | 31 | 30 | 29 | 28 | 27 | 26 | 25 | 24 | 23 | 22 | 21 | 20 | 19 | 18 | 17 | 16 | 15 | 14 | 13 | 12 | 11 | 10 | 9 | 8 | 7 | 6 | 5 | 4 | 3 | 2 | 1 | 0 |
|---|---|---|---|---|---|---|---|---|---|---|---|---|---|---|---|---|---|---|---|---|---|---|---|---|---|---|---|---|---|---|---|---|---|---|---|
| Id | | | | | | | | | | | | | | | | | | | | | | | | | | | | A | A | A | A | A | A | A | A |
| **Reset 0x00000000** | | | | **0** | **0** | **0** | **0** | **0** | **0** | **0** | **0** | **0** | **0** | **0** | **0** | **0** | **0** | **0** | **0** | **0** | **0** | **0** | **0** | **0** | **0** | **0** | **0** | **0** | **0** | **0** | **0** | **0** | **0** | **0** | **0** |
| **Id** | **RW** | **Field** | **Value Id** | **Value** | | | | | | | | **Description** | | | | | | | | | | | | | | | | | | | | | | | |
| A | RW | TXPOWER | | | | | | | | | | RADIO output power. | | | | | | | | | | | | | | | | | | | | | | | |
| | | | | | | | | | | | | Output power in number of dBm, i.e. if the value -20 is specified the output power will be set to -20dBm. | | | | | | | | | | | | | | | | | | | | | | | |
| | | | Pos4dBm | 0x04 | | | | | | | | +4 dBm | | | | | | | | | | | | | | | | | | | | | | | |
| | | | Pos3dBm | 0x03 | | | | | | | | +3 dBm | | | | | | | | | | | | | | | | | | | | | | | |
| | | | 0dBm | 0x00 | | | | | | | | 0 dBm | | | | | | | | | | | | | | | | | | | | | | | |
| | | | Neg4dBm | 0xFC | | | | | | | | -4 dBm | | | | | | | | | | | | | | | | | | | | | | | |
| | | | Neg8dBm | 0xF8 | | | | | | | | -8 dBm | | | | | | | | | | | | | | | | | | | | | | | |
| | | | Neg12dBm | 0xF4 | | | | | | | | -12 dBm | | | | | | | | | | | | | | | | | | | | | | | |
| | | | Neg16dBm | 0xF0 | | | | | | | | -16 dBm | | | | | | | | | | | | | | | | | | | | | | | |
| | | | Neg20dBm | 0xEC | | | | | | | | -20 dBm | | | | | | | | | | | | | | | | | | | | | | | |
| | | | Neg30dBm | 0xD8 | | | | | | | | -40 dBm | | | | | | | | | | | | | | | | | | | | | Deprecated | | |
| | | | Neg40dBm | 0xD8 | | | | | | | | -40 dBm | | | | | | | | | | | | | | | | | | | | | | | |

## COEXISTANCE: CHANNEL WHITE LISTING:

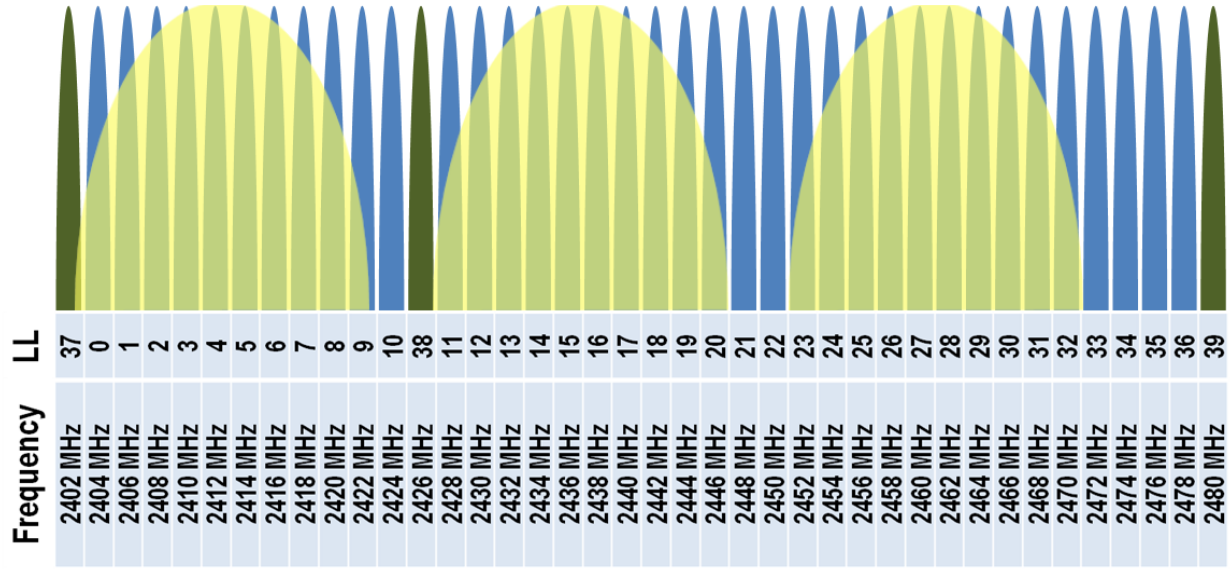


Nordic's stack S132 SoftDevice provides the structure ble_gap_opt_ch_map_t

Channel Map option. Used with sd_ble_opt_get to get the current channel map or sd_ble_opt_set to set a new channel map. When setting the channel map, it applies to all current and future connections. When getting the current channel map, it applies to a single connection and the connection handle must be supplied.

If you can get the WiFi channels in use from your WiFi interface,

You can use the sd_ble_opt_set function of the S130/S132 to set the channel map so that the WiFi is avoided. The opt_id you would use is the BLE_GAP_OPT_CH_MAP .

The channels used by WiFi should be set as a "bad" channels.

Bad = 0, Good = 1

More details here: Link

The module is programed using Nordic's development board nRF52 DK or nRF52840 DK. The module can also be programed using SWD programmer by SEGGER.

1. Connect the module to nRF52 DK as shown below:

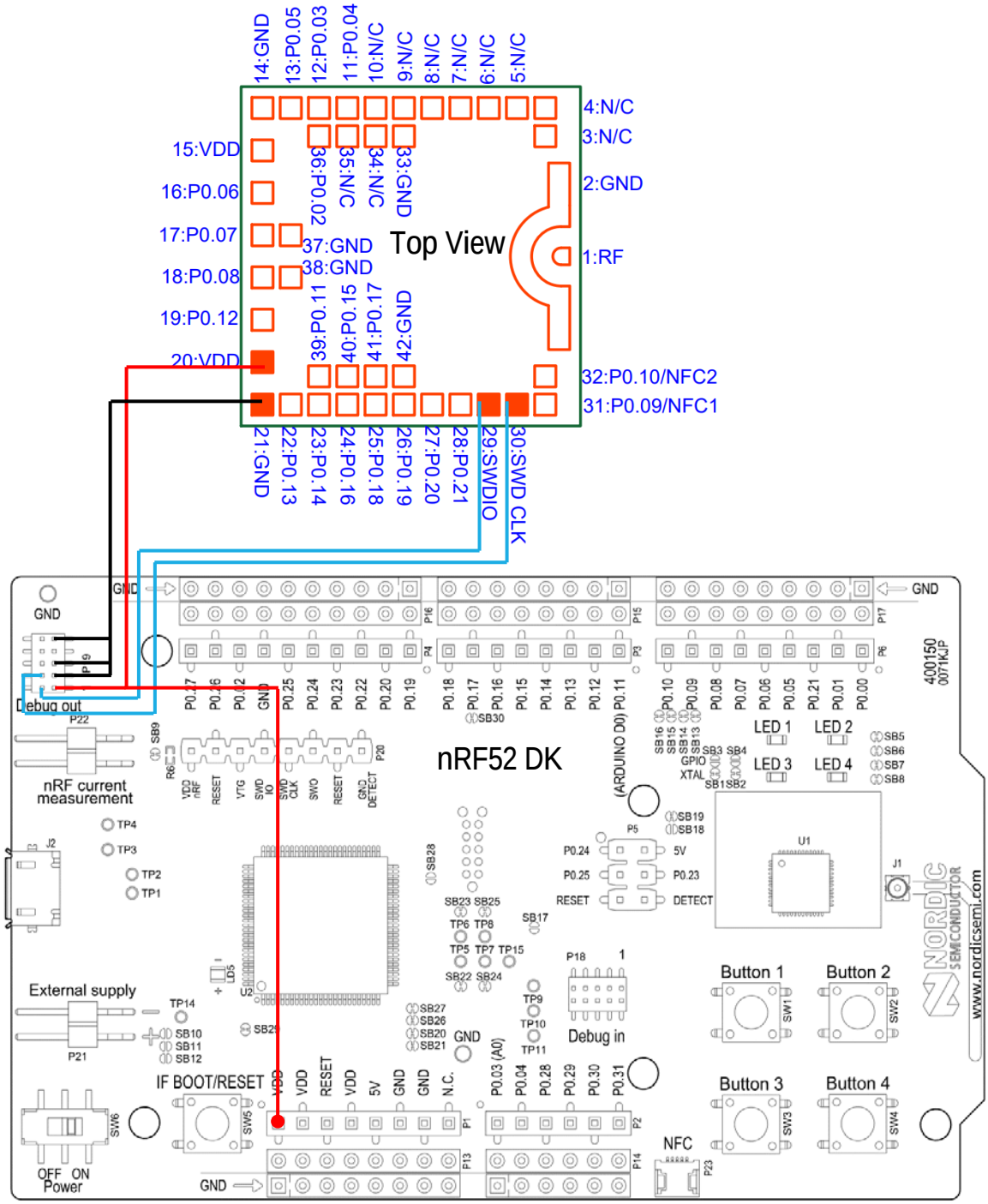


Figure: Connection diagram for programming

## FOOTPRINT AND PINOUT

Located at Honeywell GHCL part **100-07142-REV2**

| PIN NUMBER | PIN ASSIGNMENT | PIN DESCRIPTION |
|---|---|---|
| 1 | RF | RF |
| 2 | GND | GND |
| 3 | N/C | |
| 4 | N/C | |
| 5 | N/C | |
| 6 | N/C | |
| 7 | N/C | |
| 8 | N/C | |
| 9 | N/C | |
| 10 | N/C | |
| 11 | P0.04 | GPIO |
| 12 | P0.03 | GPIO |
| 13 | P0.05 | GPIO |
| 14 | GND | GND |
| 15 | VDD | 1.7V - 3.6V |
| 16 | P0.06 | GPIO |
| 17 | P0.07 | GPIO |
| 18 | P0.08 | GPIO |
| 19 | P0.12 | GPIO |
| 20 | VDD | 1.7V - 3.6V |
| 21 | GND | GND |
| 22 | P0.13 | GPIO |
| 23 | P0.14 | GPIO |
| 24 | P0.16 | GPIO |
| 25 | P0.18 | GPIO |
| 26 | P0.19 | GPIO |
| 27 | P0.20 | GPIO |
| 28 | P0.21 | GPIO |
| 29 | SDWIO | SWD PROGRAMING |
| 30 | SWDCLK | SWD PROGRAMING |
| 31 | P0.09/NFC1 | GPIO/NFC |
| 32 | P0.10/NFC2 | GPIO/NFC |
| 33 | GND | GND |
| 34 | N/C | |
| 35 | N/C | |
| 36 | P0.02 | GPIO |
| 37 | GND | GND |
| 38 | GND | GND |
| 39 | P0.11 | GPIO |
| 40 | P0.15 | GPIO |
| 41 | P0.17 | GPIO |
| 42 | GND | GND |

Top View

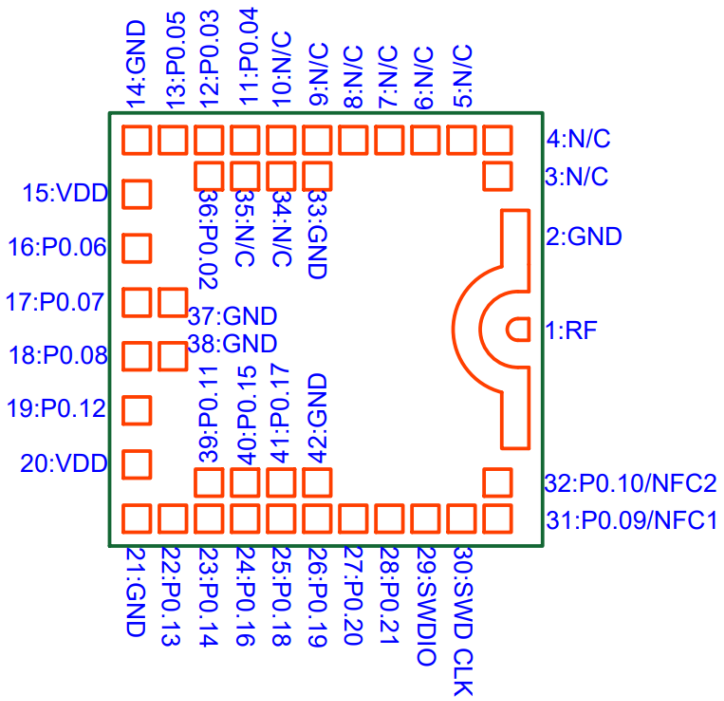

## SPECIFICATIONS

| | |
|---|---|
| **Sensitivity BLE 1Mbps** | **-96 dBm** |
| **TX power** | +4 dBm |
| **MCU** | Cortex M4f 32-bit, 64 MHz, 512kB flash, 64kB RAM |
| **Supply voltage** | 1.7V – 3.6V |
| **Current cunsumption** | Link |
| **SDK** | SDK link |

**Nordic Semiconductor links:**

*www.nordicsemi.com*

*infocenter.nordicsemi.com*

*devzone.nordicsemi.com*

**Submit your questions to:**

https://www.nordicsemi.com/eng/supportcase/create

## LINUX CONNECTIVITY

Procedure:

Use the hci-uart project in the zephyr project to provide the HCI implementation and then use BlueZ on linux to use the HCI implementation.

Others:

pc-ble-driver is a static and shared library that provides serial port communication

https://github.com/NordicSemiconductor/pc-ble-driver

IOT SDK offers Constrained Application Protocol (CoAP)

## PLACEMENT GUIDELINES

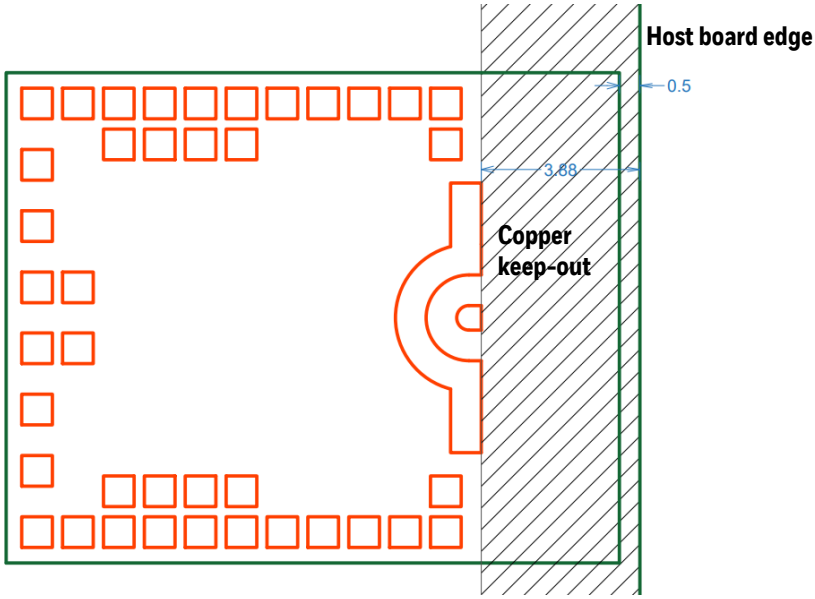


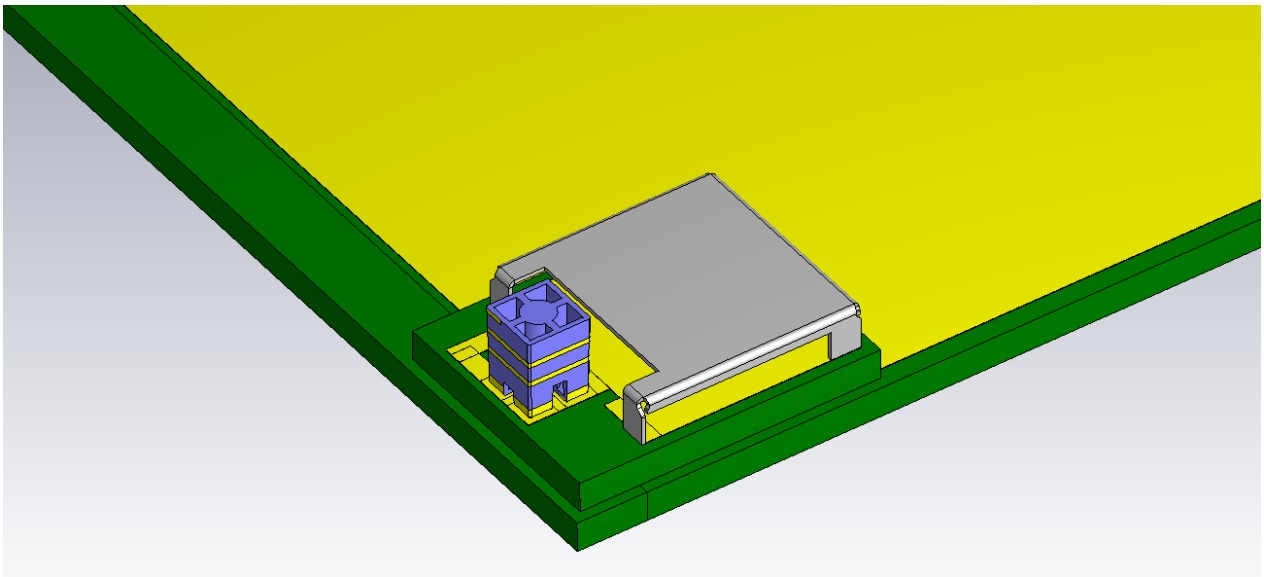

## REGULATORY INFORMATION

a. FCC

This device complies with Part 15 of the FCC Rules. Operation is subject to the following two conditions:

1) The device may not cause harmful interference, and

2) The device Module must accept any interference received, including interference that may cause undesired operation.

This device complies with FCC RF radiation exposure limits set forth for an uncontrolled environment. The antenna used for this transmitter must be installed to provide a separation distance of at least 20 cm for mobile applications from all persons and must not be co-located or operating in conjunction with any other antenna or transmitter.

Important Note: This equipment has been tested and found to comply with the limits for a Class B digital device, pursuant to Part 15 of the FCC Rules. These limits are designed to provide reasonable protection against harmful interference in a residential installation. This equipment generates, uses and can radiate radio frequency energy and, if not installed and used in accordance with the instructions, may cause harmful interference to radio communications. However, there is no guarantee that interference will not occur in a particular installation.

This transmitter must not be co-located or operating in conjunction with any other antennas or transmitters.

It is the responsibility of the host device manufacturer to ensure continued compliance with FCC rule part 15B once the module has been installed in the host device. Changes or modifications not expressly approved by the party responsible for compliance could void the user's authority to operate the equipment.

The concerned end-product must be labelled to say: “Contains FCC ID: CFS8DLBLE50”

b. ISED

*i. English*

This device complies with Innovation, Science and Economic Development Canada (ISED) license-exempt RSS standard(s). Operation is subject to the following two conditions:

1) The device may not cause interference, and

2) The device must accept any interference, including interference that may cause undesired operation of the device.

Important note: To comply with Industry Canada RF exposure limits, the antenna used for this device must be installed to provide a separation distance of at least 20cm from all persons.

RF exposure is in accordance with RSS-102, section 2.5.2.

The concerned end-product must be labelled to say: “Contains IC: 573F-BLE50”

*ii. French*

Cet equipement est conforme aux normes d’exemption de licence RSS Innovation, Sciences et Développement économique Canada. Son utilisation est soumise aux deux conditions suivantes:

1) Le dispositif ne doit pas provoquer d’interference, et

2) Le dispositif doit accepter toute interference, y compris des interferences susceptibles de provoquer un fonctionnement indesirable de l’equipement.

Remarque importante: Pour respecter les limites d’exposition aux radiofrequences Innovation, Sciences et Développement économique Canada, l'antenne utilisee pour cet appareil doit etre installe pour fournir une distance de separation d'au moins 20 cm de toutes les personnes.

L'exposition aux RF est conforme a la norme RSS-102, section 2.5.2.

Le produit final concerne doit porter une etiquette avec la mention: "Contient IC: 573F-BLE50"