NCC4

Date: 5 October 2004 Version 2.10

This information is furnished for guidance, and with no guarantee as to its accuracy or completeness; its publication conveys no license under any patent or other right, nor does the publisher assume liability for any consequence of its use; specifications and availability of goods mentioned in it are subject to change without notice; it is not to be reproduced in any way, in whole or in part, without the written consent of the publisher.

© Nedap Retail Support P.O. Box 102 NL-7140 AC Groenlo the Netherlands

Technical Support:

Support
+31 (0) 544 47 15 55
support-rs@nedap.com

H. Hammer
+31 (0) 544 47 15 19
hans.hammer@nedap.com

H. Broekhuis
+31 (0) 544 47 15 02
han.broekhuis@nedap.com

Visitor's address

Nedap Retail Support
Parallelweg 2d
Groenlo
Netherlands

Postal address:

Nedap Retail Support
Postbus 102
7140 AC Groenlo

Fax

+31 (0) 544 46 58 14

© 2004 Nedap Retail Support - Netherlands
Parallelweg 2d, 7141 DC Groenlo

The software / hardware described in this book / file is furnished under a license agreement and may be used only in accordance with the terms of the agreement.

Documentation version 2.10

Copyright Notice
All Rights Reserved.
Any technical documentation that is made available by Nedap Retail Support is the copyrighted work of Nedap Retail Support and is owned by Nedap Retail Support.

NO WARRANTY. The technical documentation is being delivered to you and Nedap Retail Support makes no warranty as to its accuracy or use. Any use of the technical documentation or the information contained therein is at the risk of the user.
Documentation may include technical or other inaccuracies or typographical errors.
Nedap Retail Support reserves the right to make changes without prior notice.
No part of this publication may be copied without the express written permission of Nedap Retail Support, Parallelweg 2d, 7141 DC Groenlo, Netherlands.

Trademarks
Nedap, the Nedap logo, Nedap EASi/Net and the Nedap EASi/Net are registered trademarks of Nedap N.V. Groenlo.
Other product names mentioned in this manual may be trademarks or registered trademarks of their respective companies and are hereby acknowledged.

Printed in the Netherlands

Table of content

Postal address:	***2***
Fax	***2***
DC power supply	***5***
HF	***5***
Data-com	***5***
RS 232 interface	***5***
I/O connector	***5***
Hand-terminal connector	***5***
The following points can be used	***6***
Indicator leds	***6***
Testpoints	***6***
Specifications	***7***
Revison-view:	***8***

OS/T Network Communication & Control unit

The Network Communication & Control unit (NCC4) in the OS/T has several functions:

- Supplying the 33V DC power supply for all the units in the system. On 1 NCC4 it's possible to connect up to 16 receiver (NR4) or transmitters (NT4) units.
- Generating the HF sync signal for the whole system. This HF signal has a frequency of four times 8.2 MHz and sweeps between 30.... 36 MHz. One NCC4 has four outputs and on each output you can connect a NR4, NT4 or an other NCC4.
- The NCC4 is data-com master for all connected units. All data-communication between the connected units and the NCC4 will be initiated from the NCC4. With the external sync input from the NCC4 it's possible to integrate the NCC4 in a larger network with multiple NCC4's.
- Each NCC4 has a RS 232 communication connector from which it's possible to connect to the outside world, for example to a modem or to a PC. With this connection several things can be done, such as remote-diagnostics and firmware-upgrades.

Figure 1 shows the block diagram of the OS/T NCC4.

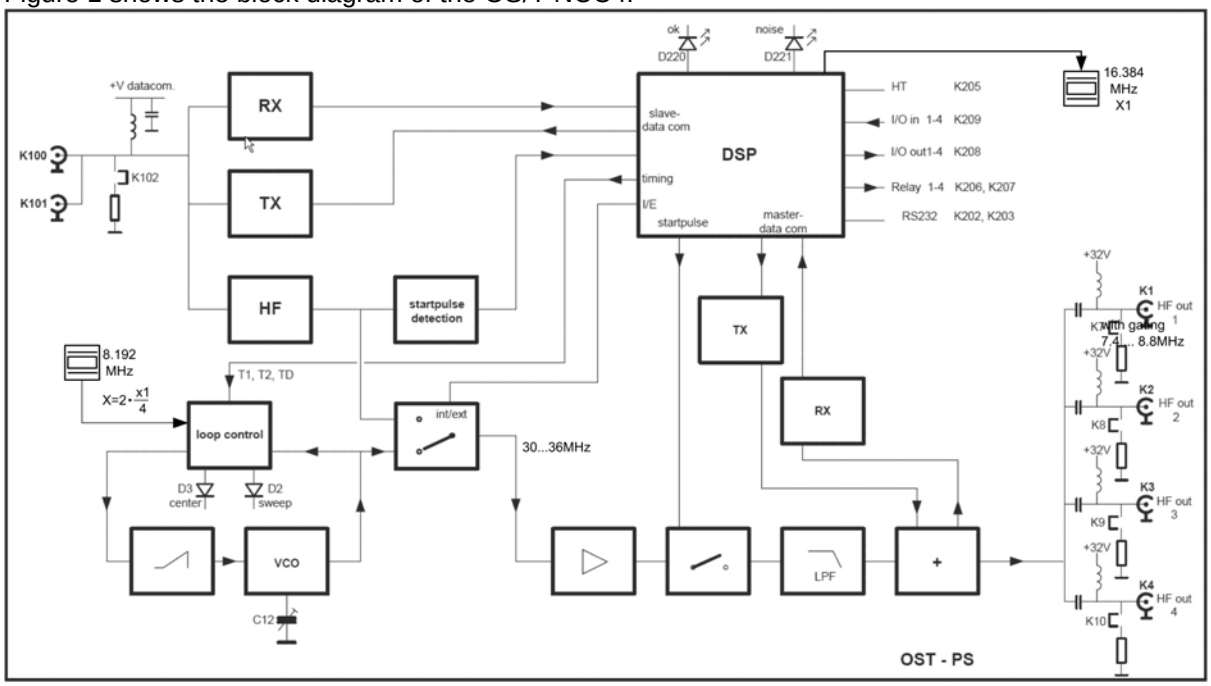

Fig.1

© Nedap Retail Support 2004 – Groenlo Holland

Description of the NCC4:

DC power supply

The 33 Volt DC Power voltage from the OS/T system is generated in a Switched-mode power unit, which is connected with a short cable on connector K5. The power supply has a continuous DC output current rating of 3.2 A.

HF

The HF signal is generated in a VCO. This VCO uses for its frequency control the 3 signals from the local DSP: TD, in advance of the start pulse and T1 and T2 on 345 and 1334 s after the start pulse. The signals T1 and T2 mark the time that the frequency of the NT4 passes the 7.7 and 8.7 MHz. A saw-tooth generator generates the waveform, necessary to sweep the VCO. The saw-tooth generator exists of a capacitor, charged with a constant current and is discharged at every pulse.
Regulation of the VCO happens only in the fly-back period to get the highest possible signal purity. By using a buffer stage the HF-signal gets the requested level and will be merged with the data-com signal. Then this signal is distributed to four output connectors K1 till K4.

Data-com

One of the important features from the OS/T system is the data-com over the coax-cable. With this feature it's no longer necessary to use an extra data-cable between the units, which simplify the installation of the system. The NCC4 plays a central roll in providing the data-com. All the connected units are interrogated periodically by the NCC4. If there are messages like an alarm on a connected NR4, then the NCC4 will be process this and takes the necessary action: Sending a command, to turn on the lamps on the activated aisle.
At the beginning of each sweep, on a fixed timeslot, the NCC4 sends a data-block. This data-block may contain a question for a connected NR4 or NT4. The answer will be transmitted in another time-slot.
The transmission of data is accomplished by adding small pulses on the HF signal. With a low pass filter and a sensitive amplifier these pulses can be recovered on the receiving side..
If multiple NCC4's are necessary to be fitted in a larger installation, then they have to be linked. Every NCC4 is then a master for his own segment. The "upper neighbour" of a NCC4 is connected to a slave sync input, while the "under neighbour" in the circuit will be connected on an output. The slave sync input is doubled to link the incoming cable to the next segment of the "upper neighbour". When the NCC4 is the last one in a chain a terminator jumper must be placed.
A slave NCC4 may be switched off without disturbing the data communication.

RS 232 interface

Each NCC4 is equipped with a RS232 connector. With this it's possible to connect a modem or a PC to communicate with the OS/T system.
With these capabilities you can use remote-diagnostics, firmware-upgrade and system configuration. The communication uses the standard UART circuit.

I/O connector

The NCC4 comes with an I/O connector with four opto-coupler inputs, four opto-coupler outputs and four relay outputs with one voltage free make-and-break contact. All in- and outputs are galvanic separated from the power supply. The in- and outputs may be used for camera activation, metal detection alarm, extra alarm-lamps. The functionality of the in- and outputs is determined by the software.

Hand-terminal connector

A standard NEDAP RS Handheld terminal may be connected to the NCC4. With these HT you can edit the various local settings.

© Nedap Retail Support 2004 – Groenlo Holland

Figure 2 shows the component arrangement of the NCC4 (***Hardware version 4)***:

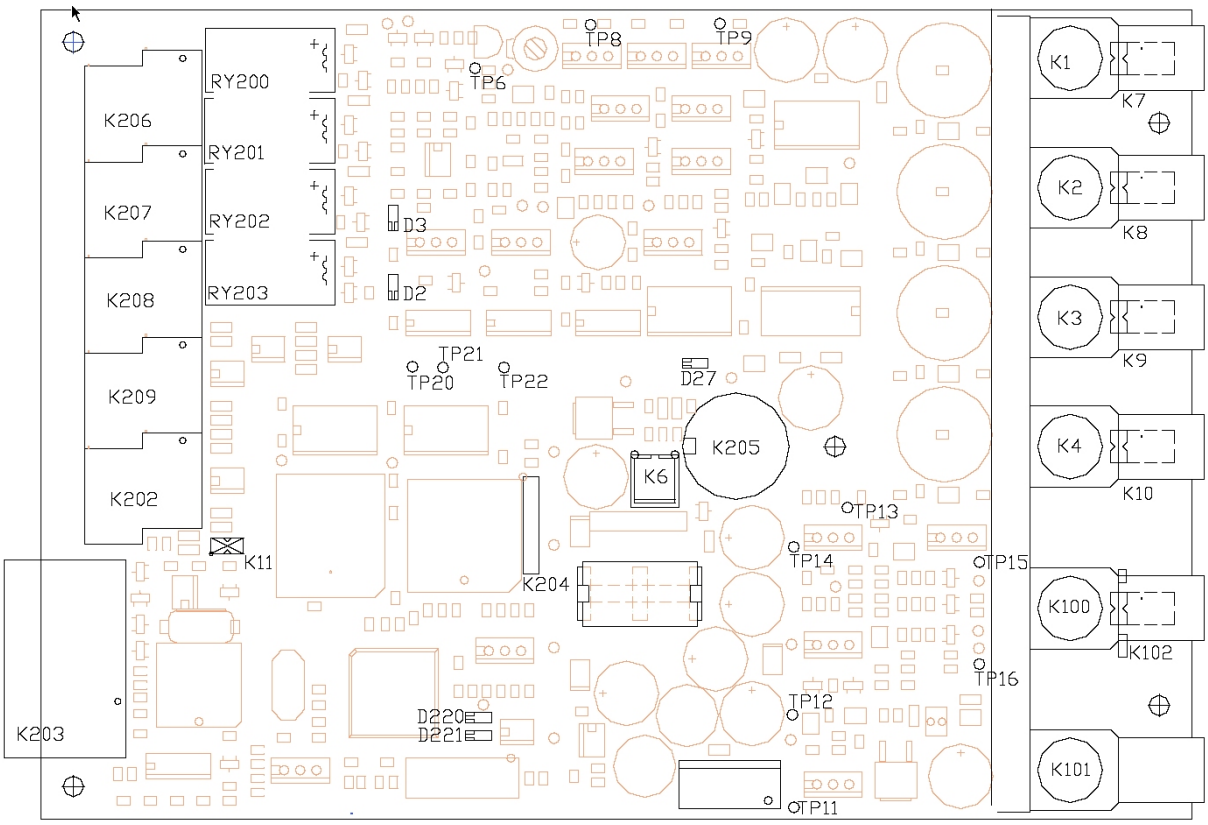

The following points can be used

K100	slave sync input	K10	50 ohm terminator in aid of K4
K101	slave sync input	K11	50 ohm terminator in aid of K202
K102	50 ohm terminator	K202	RS 485 interface connector
K1	Output	K203	RS 232 interface connector
K2	Output	K205	Hand-terminal connection
K3	Output	K206	Relay outputs Ry3, Ry4
K4	Output	K207	Relay outputs Ry1, Ry2
K5	32V DC power input	K208	Opto outputs 1-4
K6	power LED connection	K209	Opto inputs 1-4
K7	50 ohm terminator in aid of K1	C12	VCO linearity
K8	50 ohm terminator in aid of K2		
K9	50 ohm terminator in aid of K3		

Indicator leds (Y = yellow, Rd = red, Gr = green)

D27	Power (Gr)	
D220	NCC4 (Y)	(On= a tag is detected by the NR4)
D221	NCC4 comm fault (Rd)	(On= a segment doesn't answer)
D2	Sweep lock(Y)	
D3	Center lock(Y)	

Testpoints

Tp6	Sweep voltage	Tp11	Slave Tx
Tp7	Master Tx	Tp12	Slave Rx
Tp8	Master Rx	Tp13	Slave Start
Tp9	Master Clk	Tp20	T2
Tp15	Slave Clk	Tp21	T1
Tp16	Slave HF in	Tp22	TD
Tp14	Slave HF 32MHz		

© Nedap Retail Support 2004 – Groenlo Holland

Specifications

Mains NCC4:	
Power Supply	230 Volt 50 Hz (90-220 Volt 50-60 Hz)
Power Consumption	Max 150 Watt
NCC4-pcb:	
Power supply	33 Volt DC
Current consumption	100 mA (excl connected slave units)
Sync input signal	30-36 MHz, minimal 4 dB in 50 ohm (1Vtt)
Outputs (4x)	30-36 MHz, nominal 10 dB in 50 ohm (2Vtt)
Frequency sweep	1400 kHz
Sweep frequency	600 Hz saw tooth form.
Maximal DC load to one or more outputs	3.2 A (ca 16 slave units)at 230 V
Maximal DC load to one or more outputs	2.0 A (ca 10 slave units)at 115 V

© Nedap Retail Support 2004 – Groenlo Holland

Revison-view:

Hardware version 5:

Nr	Index	Date	Description	Perform
		april 2000	- Jumper K11 removed and K202 became a feature connector. - Jumper K102 moved a little. - Components are removed / changed.	Nedap

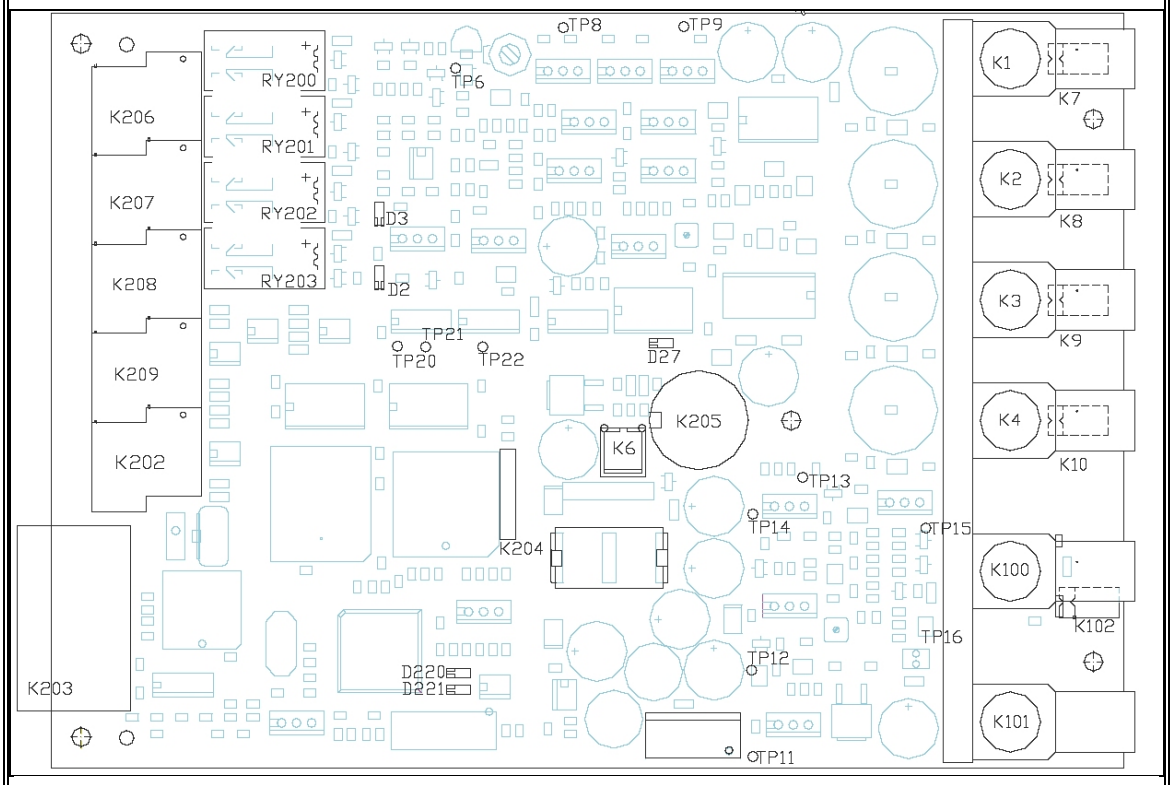

© Nedap Retail Support 2004 – Groenlo Holland

Chapter 2

MD Receiver: Art no. 7818360

Description

The 66 kHz signal enters the receiver through a band-pass filter. A low noise opamp amplifies the signal after which it's available as two opposite signals. These signals are passed through an electronic switch (4066). Through the data cable another 66 kHz sinus shaped signal enters which is primarily shaped into two block signals.
The two opposite shaped signals each are feed to an electric switch, which is controlled by the two block signals. The output of these switch looks like a double phase rectified signal This signal then enters two separate filter blocks; one produce a "metal" signal and the other a noise signal. These two signals are compared in the last opamp stage producing an alarm, which is available on the data cable.

The block diagram of the MD receiver:

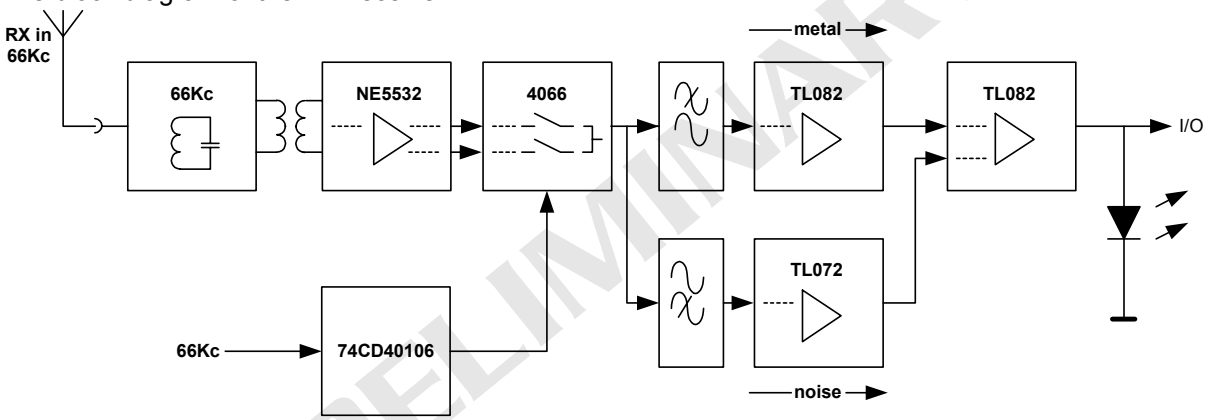

PRELIMINARY

Antennas other than EQ45/EQ30

The other antennas in which the MD is used must be connected to the a-synchronous/symmetrical antenna input. The antenna selector jumper must be set in the right position.

See also the component arrangement