SAR TEST REPORT

Test Report No. : 11022049H-D

Applicant	:	**NIKON CORPORATION**
Type of Equipment	:	**Wireless Transmitter**
Model No.	:	**N1534**
FCC ID	:	**CGJ1252EA**
Test regulation	:	**FCC47CFR 2.1093**
Test Result	:	**Complied**
Reported SAR(1g) Value		**The highest reported SAR(1g)** DTS: 2412-2462MHz band: 1.023 W/kg UNII: 5180-5320MHz band: 1.391 W/kg UNII: 5745-5825MHz band: 1.153 W/kg Simultaneous Transmission: 1.568 W/kg

1. This test report shall not be reproduced in full or partial, without the written approval of UL Japan, Inc.
2. The results in this report apply only to the sample tested.
3. This sample tested is in compliance with the limits of the above regulation.
4. The test results in this report are traceable to the national or international standards.
5. This test report must not be used by the customer to claim product certification, approval, or endorsement by NVLAP, NIST, or any agency of the Federal Government.
6. This test report covers SAR technical requirements. It does not cover administrative issues such as Manual or non-SAR test related Requirements. (if applicable)

Date of test: November 4 to 30, 2015

Representative test engineer: T.Nakagawa
Tomohisa Nakagawa
Engineer
Consumer Technology Division

Approved by : T. Hatakeda
Takahiro Hatakeda
Leader
Consumer Technology Division

NVLAP LAB CODE: 200572-0

This laboratory is accredited by the NVLAP LAB CODE 200572-0, U.S.A. The tests reported herein have been performed in accordance with its terms of accreditation.
*As for the range of Accreditation in NVLAP, you may refer to the WEB address,
http://japan.ul.com/resources/emc_accredited/

REVISION HISTORY

Original Test Report No.: 11022049H-D

Revision	Test report No.	Date	Page revised	Contents
- (Original)	11022049H-D	January 6, 2016	-	-

CONTENTS PAGE

SECTION 1: Customer information **4**
SECTION 2: Equipment under test (E.U.T.) **4**
2.1 Identification of E.U.T 4
2.2 Product Description 5
SECTION 3 : Test standard information **6**
3.1 Test Specification 6
3.2 Procedure 6
3.3 Exposure limit 7
3.4 Test Location 7
SECTION 4 : Test result **8**
4.1 Stand-alone SAR result 8
SECTION 5 RF Exposure Conditions (Test Configurations) **9**
5.1 SAR test exclusion considerations according to KDB447498 D01 9
5.2 Estimated SAR for Simultaneous Transmission SAR Analysis 11
SECTION 6 : SAR test opearting mode **12**
6.1 Output Power and SAR test required 12
SECTION 7: Description of the Body setup **16**
7.1 Test position for Body setup 16
SECTION 8 : Test surrounding **17**
8.1 Measurement uncertainty 17
SECTION 9 : Measurement results **19**
9.1 Body SAR of 2.4GHz 19
9.2 Body SAR of 5.2GHz 22
9.3 Body SAR of 5.8GHz 26
SECTION 10 Simultaneous Transmission SAR Analysis **29**
10.1 Simultaneous Transmission SAR Consideration 29
SECTION 11 Test instruments **30**
APPENDIX 1 : SAR Measurement data **31**
1. Evaluation procedure 31
2. Measurement data(2.4GHz) 32
3. Measurement data(5.2GHz) 43
4. Measurement data(5.8GHz) 61
APPENDIX2 : System Check **71**
1. System check result Body 2450MHz 71
2. System Check Dipole (D2450V2,S/N:713) 74
3. System check result Body 5250MHz 84
4. System check result Body 5750MHz 89
5. System Check Dipole (D5GHzV2,S/N:1020) 92
6. System check uncertainty 112
APPENDIX 3 : System specifications **114**
1. Configuration and peripherals 114
2. Specifications 115
3. Dosimetric E-Field Probe Calibration (EX3DV4, S/N:3922) 119
APPENDIX 4 : Photographs of test setup **130**
1. Photographs of EUT 130
2. Antenna position 131
3. Photographs of setup 132

SECTION 1: Customer information

Company Name	:	NEC Platforms, Ltd.
Address	:	800, Shimomata, Kakegawa-shi, Shizuoka 436-8501,Japan
Telephone Number	:	+81-537-22-8276
Facsimile Number	:	+81-537-22-8236
Contact Person	:	Masamitsu Kawamura

*Remarks:
NIKON CORPORATION designates NEC Platforms, Ltd. as manufacturer of the product (Wireless Transmitter).

SECTION 2: Equipment under test (E.U.T.)

2.1 Identification of E.U.T.

Type of Equipment	:	Wireless Transmitter
Model No.	:	N1534
Serial No.	:	PT2-35
Rating	:	DC 7.0 V
Receipt Date of Sample	:	October 28, 2015
Country of Mass-production	:	Japan
Condition of EUT	:	Engineering prototype (Not for Sale: This sample is equivalent to mass-produced items.)
Modification of EUT	:	No Modification by the test lab

2.2 Product Description

Model: N1534 (referred to as the EUT in this report) is a Wireless Transmitter.

General Specification

Clock frequency(ies) in the system	:	800 MHz Radio part: 32.7 kHz (OSC), 40 MHz (Crystal)
Operating temperature	:	0 deg. C to +40 deg. C

Radio Specification

Radio Type	:	Transceiver
Power Supply (inner)	:	DC 3.3 V

Specification of Wireless LAN (IEEE802.11b/g/a/n-20/n-40/11ac-20/11ac-40/11ac-80)

Type of radio	IEEE802.11b	IEEE802.11g/n (20 M band)	IEEE802.11n (40 M band)	IEEE802.11a/n/ac (20 M band)	IEEE802.11n/ac (40 M band)	IEEE802.11ac (80 M band)
Frequency of operation (MHz)	2412 - 2462	2412 - 2462	2422 - 2452	5180 - 5240 5260 - 5320 5745 - 5825	5190 - 5230 5270 - 5310 5755 - 5795	5210 5290 5775
Type of modulation	DSSS (CCK, DQPSK, DBPSK)	OFDM-CCK (64QAM, 16QAM, QPSK, BPSK)		OFDM (64QAM, 16QAM, QPSK, BPSK, 256QAM(IEEE802.11ac only))		
Channel spacing	5 MHz			20 MHz	40 MHz	80 MHz
Antenna type	Antenna 1: Pattern Dipole Antenna Antenna 2: Pattern Dipole Antenna					
Antenna Gain	<Antenna 1> 2.4 GHz : - 2.2 dBi 5 GHz : 2.1 dBi <Antenna 2> 2.4 GHz : 0.3 dBi 5 GHz: 2.1 dBi					
Directional Antenna Gain *1)	2.4 GHz: 2.15 dBi 5 GHz: 5.11 dBi					

*1) Directional antenna gain = $10\log [(10^{G1/20} + 10^{G2/20})^2 / N_{ANT}]$ [dBi]

SECTION 3 : Test standard information

3.1 Test Specification

Title : **FCC47CFR 2.1093**
Radiofrequency radiation exposure evaluation: portable devices.
: **IEEE Std 1528-2013:**
IEEE Recommended Practice for Determining the Peak Spatial-Average Specific Absorption Rate (SAR) in the Human Head from Wireless Communications Devices.

: **Published RF exposure KDB procedures**

☑	**KDB447498D01(v06)**	Mobile and Portable Device RF Exposure Procedures and Equipment Authorization Policies
☐	**KDB447498D02(v02r01)**	SAR Measurement Procedures for USB Dongle Transmitters
☐	**KDB648474D04(v01r03)**	SAR Evaluation Considerations for Wireless Handsets
☐	**KDB941225D01(v03r01)**	SAR Measurement Procedures for 3G Devices
☐	**KDB941225D05(v02r04)**	SAR for LTE Devices
☐	**KDB941225D06(v02r01)**	SAR test procedures for devices incorporating SAR Evaluation Procedures for Portable Devices with Wireless Router Capabilities (Hot Spot SAR)
☐	**KDB941225D07(v01r02)**	SAR Evaluation Procedures for UMPC Mini-Tablet Devices
☐	**KDB616217D04(v01r02)**	SAR Evaluation Considerations for Laptop, Notebook, Netbook and Tablet Computers
☑	**KDB865664D01(v01r04)**	SAR Measurement Requirements for 100MHz to 6 GHz
☑	**KDB248227D01(v02r02)**	SAR Measurement Procedures for 802.11a//b/g Transmitters

Reference
[1]SPEAG uncertainty document (AN 15-7/AN19-17) for DASY 5 System from SPEAG (Schmid & Partner Engineering AG).
[2] IEEE Std 1528-2013: IEEE Recommended Practice for Determining the Peak Spatial-Average Specific Absorption Rate (SAR) in the Human Head from Wireless Communications Devices: Measurement Techniques.

3.2 Procedure

Transmitter	**WLAN**
Test Procedure	Published RF exposure KDB procedures
	SAR
Category	FCC47CFR 2.1093
Note: UL Japan, Inc. 's SAR Work Procedures 13-EM-W0429 and 13-EM-W0430	

3.3 Exposure limit

(A) Limits for Occupational/Controlled Exposure (W/kg)

Spatial Average (averaged over the whole body)	Spatial Peak (averaged over any 1g of tissue)	Spatial Peak (hands/wrists/feet/ankles averaged over 10g)
0.4	8.0	20.0

(B) Limits for General population/Uncontrolled Exposure (W/kg)

Spatial Average (averaged over the whole body	Spatial Peak (averaged over any 1g of tissue)	Spatial Peak (hands/wrists/feet/ankles averaged over 10g)
0.08	1.6	4.0

Occupational/Controlled Environments: are defined as locations where there is exposure that may be incurred by people who are aware of the potential for exposure, (i.e. as a result of employment or occupation).

General Population/Uncontrolled Environments: are defined as locations where there is the exposure of individuals who have no knowledge or control of their exposure.

NOTE:GENERAL POPULATION/UNCONTROLLED EXPOSURE
SPATIAL PEAK(averaged over any 1g of tissue) LIMIT
1.6 W/kg

3.4 Test Location

*Shielded room for SAR testings
UL Japan, Inc. Ise EMC Lab. *NVLAP Lab. code: 200572-0
4383-326 Asama-cho, Ise-shi, Mie-ken 516-0021 JAPAN
Telephone : +81 596 24 8999 Facsimile : +81 596 24 8124

SECTION 4 : Test result

4.1 Stand-alone SAR result

Reported SAR

Measured SAR is scaled to the maximum tune-up tolerance limit by the following formulas.
Reported SAR= Measured SAR [W/kg] * Scaled factor *1
Maximum tune-up tolerance limit is by the specification from a customer.

Body SAR

Mode	Frequency [MHz]	Measured power [dBm]*2	Measured power [mW]	Maximum tune-up tolerance limit [dBm]*3	Maximum tune-up tolerance limit [mW]*3	Measured SAR [W/kg]	Scaled factor	**Reported SAR [W/kg]**
WLAN 11b (DTS : 2412 - 2462MHz band)	2462	9.20	8.32	10.00	10.00	0.851	1.202	**1.023**
WLAN 11a (UNII : 5180 - 5320MHz band)	5240	9.24	8.39	9.50	8.91	1.310	1.062	**1.391**
WLAN 11ac40 (UNII : 5745 - 5825MHz band)	5795	9.45	8.81	9.50	8.91	1.140	1.012	**1.153**

Notes:

1. Scaled factor = Maximum tune-up tolerance limit [mW] / Measured power [mW]
2. The sample used by the SAR test is within the tune-up tolerance but not more than 2 dB lower than the maximum tune-up tolerance limit.SAR maximum tune-up tolerance limit. That is, measured power is included the tune-up tolerance range.
3. Maximum tune-up tolerance limit is defined as maximum timed-average value. (Considering to maximum duty cycle of WLAN.)

SECTION 5 RF Exposure Conditions (Test Configurations)

5.1 SAR test exclusion considerations according to KDB447498 D01

The following is based on KDB447498D01.

1) At 100 MHz to 6 GHz and for test separation distances < 50 mm, the SAR test exclusion threshold is determined according to the following.

Antenna	Tx Interface	Frequency (MHz)	Output Power		Separation Distances (mm)						Calculated Threshold Value					
			dBm	mW	Top	Bottom	Right	Left	Front	Rear	Top	Bottom	Right	Left	Front	Rear
WiFi - Antenna 1																
WLAN Antenna 1	WiFi	2462	10.00	10	5.00	5.00	5.00	87.55	55.60	5.00	3.1 -MEASURE-	3.1 -MEASURE-	3.1 -MEASURE-	> 50 mm	> 50 mm	3.1 -MEASURE-
WLAN Antenna 1	WiFi	5240	9.50	9	5.00	5.00	5.00	87.55	55.60	5.00	4.1 -MEASURE-	4.1 -MEASURE-	4.1 -MEASURE-	> 50 mm	> 50 mm	4.1 -MEASURE-
WLAN Antenna 1	WiFi	5320	8.50	7	5.00	5.00	5.00	87.55	55.60	5.00	3.2 -MEASURE-	3.2 -MEASURE-	3.2 -MEASURE-	> 50 mm	> 50 mm	3.2 -MEASURE-
WLAN Antenna 1	WiFi	5700	9.50	9	5.00	5.00	5.00	87.55	55.60	5.00	4.3 -MEASURE-	4.3 -MEASURE-	4.3 -MEASURE-	> 50 mm	> 50 mm	4.3 -MEASURE-
WLAN Antenna 1	WiFi	5825	9.50	9	5.00	5.00	5.00	87.55	55.60	5.00	4.3 -MEASURE-	4.3 -MEASURE-	4.3 -MEASURE-	> 50 mm	> 50 mm	4.3 -MEASURE-
WiFi - Antenna 2																
WLAN Antenna 2	WiFi	2462	10.00	10	5.00	5.00	78.90	5.00	5.00	55.8	3.1 -MEASURE-	3.1 -MEASURE-	> 50 mm	3.1 -MEASURE-	3.1 -MEASURE-	> 50 mm
WLAN Antenna 2	WiFi	5240	9.50	9	5.00	5.00	78.90	5.00	5.00	55.8	4.1 -MEASURE-	4.1 -MEASURE-	> 50 mm	4.1 -MEASURE-	4.1 -MEASURE-	> 50 mm
WLAN Antenna 2	WiFi	5320	8.50	7	5.00	5.00	78.90	5.00	5.00	55.8	3.2 -MEASURE-	3.2 -MEASURE-	> 50 mm	3.2 -MEASURE-	3.2 -MEASURE-	> 50 mm
WLAN Antenna 2	WiFi	5700	9.50	9	5.00	5.00	78.90	5.00	5.00	55.8	4.3 -MEASURE-	4.3 -MEASURE-	> 50 mm	4.3 -MEASURE-	4.3 -MEASURE-	> 50 mm
WLAN Antenna 2	WiFi	5825	9.50	9	5.00	5.00	78.90	5.00	5.00	55.8	4.3 -MEASURE-	4.3 -MEASURE-	> 50 mm	4.3 -MEASURE-	4.3 -MEASURE-	> 50 mm

Notes:

1. The 1-g and 10-g SAR test exclusion thresholds for 100 MHz to 6 GHz at test separation distances≤ 50 mm are determined by:
   [(max. power of channel, including tune-up tolerance, mW)/(min. test separation distance, mm)] ·[√f(GHz)] ≤ 3.0 for 1-g SAR and ≤ 7.5 for 10-g extremity SAR.
2. f(GHz) is the RF channel transmit frequency in GHz
3. Power and distance are rounded to the nearest mW and mm before calculation
4. The result is rounded to one decimal place for comparison
5. The test exclusions are applicable only when the minimum test separation distance is ≤ 50 mm and for transmission frequencies between 100 MHz and 6 GHz. When the minimum test separation distance is < 5 mm, a distance of 5 mm is applied to determine SAR test exclusion.

2) At 100 MHz to 6 GHz and for test separation distances > 50 mm, the SAR test exclusion threshold is determined according to the following.

Antenna	Tx Interface	Frequency (MHz)	Output Power		Separation Distances (mm)						Calculated Threshold Value					
			dBm	mW	Top	Bottom	Right	Left	Front	Rear	Top	Bottom	Right	Left	Front	Rear
WiFi - Antenna 1																
WLAN Antenna 1	WiFi	2462	10.00	10	5.00	5.00	5.00	87.55	55.60	5.00	*< 50 mm*	*< 50 mm*	*< 50 mm*	471.1 mW -EXEMPT-	151.6 mW -EXEMPT-	*< 50 mm*
WLAN Antenna 1	WiFi	5240	9.50	9	5.00	5.00	5.00	87.55	55.60	5.00	*< 50 mm*	*< 50 mm*	*< 50 mm*	441 mW -EXEMPT-	121.5 mW -EXEMPT-	*< 50 mm*
WLAN Antenna 1	WiFi	5320	8.50	7	5.00	5.00	5.00	87.55	55.60	5.00	*< 50 mm*	*< 50 mm*	*< 50 mm*	440.5 mW -EXEMPT-	121 mW -EXEMPT-	*< 50 mm*
WLAN Antenna 1	WiFi	5700	9.50	9	5.00	5.00	5.00	87.55	55.60	5.00	*< 50 mm*	*< 50 mm*	*< 50 mm*	438.3 mW -EXEMPT-	118.8 mW -EXEMPT-	*< 50 mm*
WLAN Antenna 1	WiFi	5825	9.50	9	5.00	5.00	5.00	87.55	55.60	5.00	*< 50 mm*	*< 50 mm*	*< 50 mm*	437.7 mW -EXEMPT-	118.2 mW -EXEMPT-	*< 50 mm*
WiFi - Antenna 2																
WLAN Antenna 2	WiFi	2462	10.00	10	5.00	5.00	78.90	5.00	5.00	55.80	*< 50 mm*	*< 50 mm*	384.6 mW -EXEMPT-	*< 50 mm*	< 50 mm	153.6 mW -EXEMPT-
WLAN Antenna 2	WiFi	5240	9.50	9	5.00	5.00	78.90	5.00	5.00	55.80	*< 50 mm*	*< 50 mm*	354.5 mW -EXEMPT-	*< 50 mm*	< 50 mm	123.5 mW -EXEMPT-
WLAN Antenna 2	WiFi	5320	8.50	7	5.00	5.00	78.90	5.00	5.00	55.80	*< 50 mm*	*< 50 mm*	354 mW -EXEMPT-	*< 50 mm*	< 50 mm	123 mW -EXEMPT-
WLAN Antenna 2	WiFi	5700	9.50	9	5.00	5.00	78.90	5.00	5.00	55.80	*< 50 mm*	*< 50 mm*	351.8 mW -EXEMPT-	*< 50 mm*	< 50 mm	120.8 mW -EXEMPT-
WLAN Antenna 2	WiFi	5825	9.50	9	5.00	5.00	78.90	5.00	5.00	55.80	*< 50 mm*	*< 50 mm*	351.2 mW -EXEMPT-	*< 50 mm*	< 50 mm	120.2 mW -EXEMPT-

Notes:

1. The upper frequency of the frequency band was used in order to calculate standalone SAR test exclusion considerations.
2. Based on KDB447498D01, minimum distance is 5mm. When the minimum test separation distance is < 5 mm, a distance of 5 mm is applied to determine SAR test exclusion and also § 4.1.5 if the antenna is at close proximity to user then the outer surface of the DUT should be treated as the radiating surface. The test separation distance is then determined by the smallest distance between the outer surface of the device and the user. For the purposes of this report close proximity has been defined as closer than 50 mm. For antennas <50 mm from the each edge the separation distance used for the SAR exclusion calculations is 0mm.
3. [(max. power of channel, including tune-up tolerance, mW)/(min. test separation distance, mm)] ·[√f(GHz)] ≤ 3.0 If it is Calculation of exclusion ≤ 3.0 standalone SAR test is excluded.
4. Maximum tune-up tolerance limit is by the specification from a customer.
5. Maximum tune-up tolerance limit(mW) is rounded to one decimal place.
6. [(3·50)/(√f(GHz))) + (test separation distance - 50 mm)·(f(MHz)/150)] mW at > 100 MHz and ≤ 1500 MHz
   [(3·50)/(√f(GHz))) + (test separation distance - 50 mm)·10] mW at > 1500 MHz and ≤ 6 GHz

5.2 Estimated SAR for Simultaneous Transmission SAR Analysis

Antenna	Tx Interface	Frequency (MHz)	Output Power		Separation Distances (mm)						Estimated 1-g SAR Value (W/kg)					
			dBm	mW	Top	Bottom	Right	Left	Front	Rear	Top	Bottom	Right	Left	Front	Rear
WiFi - Antenna 1																
WLAN Antenna 1	WiFi	2462	10.00	10	5.00	5.00	5.00	87.55	55.60	5.00	-MEASURE-	-MEASURE-	-MEASURE-	0.400	0.400	-MEASURE-
WLAN Antenna 1	WiFi	5240	9.50	9	5.00	5.00	5.00	87.55	55.60	5.00	-MEASURE-	-MEASURE-	-MEASURE-	0.400	0.400	-MEASURE-
WLAN Antenna 1	WiFi	5320	8.50	7	5.00	5.00	5.00	87.55	55.60	5.00	-MEASURE-	-MEASURE-	-MEASURE-	0.400	0.400	-MEASURE-
WLAN Antenna 1	WiFi	5700	9.50	9	5.00	5.00	5.00	87.55	55.60	5.00	-MEASURE-	-MEASURE-	-MEASURE-	0.400	0.400	-MEASURE-
WLAN Antenna 1	WiFi	5825	9.50	9	5.00	5.00	5.00	87.55	55.60	5.00	-MEASURE-	-MEASURE-	-MEASURE-	0.400	0.400	-MEASURE-
WiFi - Antenna 2																
WLAN Antenna 2	WiFi	2462	10.00	10	5.00	5.00	78.90	5.00	5.00	55.8	-MEASURE-	-MEASURE-	0.400	-MEASURE-	-MEASURE-	0.400
WLAN Antenna 2	WiFi	5240	9.50	9	5.00	5.00	78.90	5.00	5.00	55.8	-MEASURE-	-MEASURE-	0.400	-MEASURE-	-MEASURE-	0.400
WLAN Antenna 2	WiFi	5320	8.50	7	5.00	5.00	78.90	5.00	5.00	55.8	-MEASURE-	-MEASURE-	0.400	-MEASURE-	-MEASURE-	0.400
WLAN Antenna 2	WiFi	5700	9.50	9	5.00	5.00	78.90	5.00	5.00	55.8	-MEASURE-	-MEASURE-	0.400	-MEASURE-	-MEASURE-	0.400

Notes:

1. Estimated SAR for 2 Tx was not assessed as the higher 1 Tx SAR values were used for simultaneous transmission analysis.
2. As Simultaneous Transmission SAR of the DUT was compliant under the higher power conditions of Wi-Fi 1 Tx, it was judged that such analyses would be unnecessary for Wi-Fi 2 Tx (MIMO), given the substantially lower MIMO power levels and considerable separation distance between WLAN antenna 1 and the WLAN antenna 2.
3. Wherever appropriate, Wi-Fi 1 Tx (SISO) SAR values were used to represent those of Wi-Fi 2 Tx (MIMO); if compliance can be shown with the more conservative Wi-Fi 1 Tx values, then there is no need to perform separate assessment for Wi-Fi 2 Tx.
4. The separation distances from antennas to the bottom side or the edge were input. For antennas <50 mm from the bottom side or edge the separation distance used for the SAR exclusion calculations is 5 mm.

SECTION 6 : SAR test opearting mode

6.1 Output Power and SAR test required

The initial test configuration for 2.4 GHz and 5 GHz OFDM transmission modes is determined by the 802.11 configuration with the highest maximum output power specified for production units, including tune-up tolerance, in each standalone and aggregated frequency band. SAR for the initial test configuration is measured using the highest maximum output power channel determined by the default power measurement procedures. When multiple configurations in a frequency band have the same specified maximum output power, the initial test configuration is determined according to the following steps applied sequentially.

1. The largest channel bandwidth configuration is selected among the multiple configurations with the same specified maximum output power.
2. If multiple configurations have the same specified maximum output power and largest channel bandwidth, the lowest order modulation among the largest channel bandwidth configurations is selected.
3. If multiple configurations have the same specified maximum output power, largest channel bandwidth and lowest order modulation, the lowest data rate configuration among these configurations is selected.
4. When multiple transmission modes (802.11a/g/n/ac) have the same specified maximum output power, largest channel bandwidth, lowest order modulation and lowest data rate, the lowest order 802.11 mode is selected; i.e., 802.11a is chosen over 802.11n then 802.11ac or 802.11g is chosen over 802.11n.

Wi-Fi 2.4GHz (DTS Band)
SISO

Band (GHz)	Mode	Data Rate	Ch #	Freq. (MHz)	Measured average Power (dBm)		Tune-up upper Power (dBm)		SAR Test (Yes/No)	Note(s)
					Antenna 1 Tx	Antenna 2 Tx	Antenna 1 Tx	Antenna 2 Tx		
2.4	802.11b	1 Mbps	1	2412	8.88	9.09	10.0	10.0	Yes	2
			6	2437	8.98	9.31				
			11	2462	9.08	9.20				
	802.11g	6 Mbps	1	2412	8.23	9.03	10.0	10.0	No	2
			6	2437	8.45	8.78				
			11	2462	8.73	8.63				
	802.11n (HT20)	6.5 Mbps	1	2412	8.50	8.93	10.0	10.0	No	2
			6	2437	8.61	8.88				
			11	2462	8.56	8.78				
	802.11n (HT40)	13.5 Mbps	3	2422	6.15	5.79	8.0	8.0	No	2
			6	2437	8.15	8.48	9.5	9.5		
			9	2452	5.53	4.95	7.0	7.0		

Wi-Fi 5GHz

Band (GHz)	Mode	Data Rate	Ch #	Freq. (MHz)	Measured average Power (dBm)		Tune-up upper Power (dBm)		SAR Test (Yes/No)	Note(s)
					Antenna 1 Tx	Antenna 2 Tx	Antenna 1 Tx	Antenna 2 Tx		
5.2 (U-NII 1)	802.11a	6 Mbps	36	5180	8.62	8.83	9.5	9.5	Yes	3.5
			40	5200	8.58	9.18				
			44	5220	8.85	9.20				
			48	5240	8.81	9.24				
	802.11n (HT20)	6.5 Mbps	36	5180	8.63	8.88	9.5	9.5	Yes	3
			40	5200	8.95	9.12				
			44	5220	8.73	9.14				
			48	5240	8.93	9.17				
	802.11n (HT40)	13.5 Mbps	38	5190	8.58	8.66	9.5	9.5	Yes	3.5
			46	5230	8.38	9.07				
	802.11ac (VHT20)	6.5 Mbps	36	5180	8.69	8.83	9.5	9.5	Yes	3
			40	5200	8.84	9.15				
			44	5220	8.88	9.17				
			48	5240	8.85	9.17				
	802.11ac (VHT40)	13.5 Mbps	38	5190	8.67	8.81	9.5	9.5	Yes	3,5
			46	5230	8.44	8.87				
	802.11ac (VHT80)	29.3 Mbps	42	5210	6.07	6.43	7.5	7.5	No	1
5.3 (U-NII 2A)	802.11a	6 Mbps	52	5260	7.54	8.33	8.5	8.5	No	4
			56	5280	7.91	8.39				
			60	5300	7.52	8.49				
			64	5320	7.79	8.43				
	802.11n (HT20)	6.5 Mbps	52	5260	7.39	8.46	8.5	8.5	No	4
			56	5280	7.52	8.41				
			60	5300	7.77	8.48				
			64	5320	7.81	8.48				
	802.11n (HT40)	13.5 Mbps	54	5270	7.21	8.15	8.5	8.5	No	4
			62	5310	7.51	8.16				
	802.11ac (VHT20)	6.5 Mbps	52	5260	7.85	8.30	8.5	8.5	No	4
			56	5280	7.63	8.49				
			60	5300	7.74	8.48				
			64	5320	7.76	8.48				
	802.11ac (VHT40)	13.5 Mbps	54	5270	7.39	8.14	8.5	8.5	No	4
			62	5310	7.46	8.35				
	802.11ac (VHT80)	29.3 Mbps	58	5290	6.33	6.63	7.5	7.5	No	4

Band (GHz)	Mode	Data Rate	Ch #	Freq. (MHz)	Measured average Power (dBm)		Tune-up upper Power (dBm)		SAR Test (Yes/No)	Note(s)
					Antenna 1 Tx	Antenna 2 Tx	Antenna 1 Tx	Antenna 2 Tx		
5.8 (UNII-3)	802.11a	6 Mbps	149	5745	8.29	8.49	8.5	8.5	No	1,3
			153	5765	9.20	9.49	9.5	9.5		
			157	5785	9.10	9.48				
			161	5805	8.87	9.43				
			165	5825	9.18	9.33				
	802.11n (HT20)	6.5 Mbps	149	5745	8.25	8.49	8.5	8.5	No	1,3
			153	5765	9.45	9.45	9.5	9.5		
			157	5785	9.19	9.46				
			161	5805	9.22	9.45				
			165	5825	9.08	9.39				
	802.11n (HT40)	13.5 Mbps	151	5755	8.11	8.41	8.5	8.5	No	1,3
			159	5795	9.10	9.27	9.5	9.5		
	802.11ac (VHT20)	6.5 Mbps	149	5745	8.32	8.49	8.5	8.5	No	1,3
			153	5765	9.15	9.43	9.5	9.5		
			157	5785	9.19	9.42				
			161	5805	9.19	9.49				
			165	5825	9.12	9.40				
	802.11ac (VHT40)	13.5 Mbps	151	5755	8.19	8.14	8.5	8.5	Yes	3
			159	5795	9.10	9.45	9.5	9.5		
	802.11ac (VHT80)	29.3 Mbps	155	5775	5.89	5.82	6.5	6.5	No	1,3

Note(s):

1. According to KDB248227D01, SAR measurement is not required for 802.11a, 802.11n HT20, HT40 and 802.11ac VHT20, 802.11ac VHT80 channels because the specified tune-up tolerances for 802.11a, 802.11n HT20, HT40 and 802.11ac VHT20 are equal 802.11ac VHT40 and 802. 11ac VHT80 are lower than 802.11ac VHT40
2. According to KDB248227D01, SAR is not required for 802.11g/n channels when the highest reported SAR for DSSS is adjusted by the ratio of OFDM to DSSS specified maximum output power and the adjusted SAR is ≤ 1.2 W/kg.
3. According to KDB248227D01, when the same transmission mode configurations have the same maximum output power on the same channel for the 802.11 a/g/n/ac modes, the channel in the lower order/sequence 802.11 mode (i.e. a, g, n then ac) is selected.
4. According to KDB248227D01, When different maximum output power is specified for the bands, begin SAR measurement in the band with higher specified maximum output power. The highest reported SAR for the tested configuration is adjusted by the ratio of lower to higher specified maximum output power for the two bands. When the adjusted SAR is ≤ 1.2 W/kg, SAR is not required for the band with lower maximum output power in that test configuration; otherwise, each band is tested independently for SAR.
5. According to KDB248227D01 The measured SAR is > 1.2 W/Kg so SAR is required.

Software information

*The power value of the EUT was set for testing as follows (setting value might be different from product specification value);
- Power Setting: Refer to the following table.
- Software: LAB-tool
  Ver: 15.2.4.92

*This setting of software is the worst case.
Any conditions under the normal use do not exceed the condition of setting.
In addition, end users cannot change the settings of the output power of the product.

[Power Settings] For 2.4GHz band

Mode	ch1	ch2	ch3	ch4	ch5	ch6	ch7	ch8	ch9	ch10	ch11
11b	8 dBm	8 dBm	8 dBm	8 dBm	8 dBm	8 dBm	8 dBm	8 dBm	8 dBm	8 dBm	8 dBm
11g	8 dBm	8 dBm	8 dBm	8 dBm	8 dBm	8 dBm	8 dBm	8 dBm	8 dBm	8 dBm	8 dBm
11n-20	8 dBm	8 dBm	8 dBm	8 dBm	8 dBm	8 dBm	8 dBm	8 dBm	8 dBm	8 dBm	8 dBm
11n-40	-	-	6 dBm	8 dBm	8 dBm	8 dBm	8 dBm	8 dBm	5 dBm	-	-

[Power Settings] For 5GHz band

20MHz Band W52	ch36	ch40	ch44	ch48
11a	8 dBm	8 dBm	8 dBm	8 dBm
11n-20	8 dBm	8 dBm	8 dBm	8 dBm
11ac-20	8 dBm	8 dBm	8 dBm	8 dBm

20MHz Band W53	ch52	ch56	ch60	ch64
11a	7 dBm	7 dBm	7 dBm	7 dBm
11n-20	7 dBm	7 dBm	7 dBm	7 dBm
11ac-20	7 dBm	7 dBm	7 dBm	7 dBm

20MHz Band W58	ch149	ch153	ch157	ch161	ch165
11a	7 dBm	8 dBm	8 dBm	8 dBm	8 dBm
11n-20	7 dBm	8 dBm	8 dBm	8 dBm	8 dBm
11ac-20	7 dBm	8 dBm	8 dBm	8 dBm	8 dBm

40MHz Band W52	ch38	ch46
11n-40	8 dBm	8 dBm
11ac-40	8 dBm	8 dBm

40MHz Band W53	ch54	ch62
11n-40	7 dBm	7 dBm
11ac-40	7 dBm	7 dBm

40MHz Band W58	ch151	ch159
11n-40	7 dBm	8 dBm
11ac-40	7 dBm	8 dBm

80MHz Band W52	Ch42
11ac-80	6dBm

80MHz Band W53	ch58
11ac-80	6dBm

80MHz Band W58	ch155
11ac-80	5dBm

SECTION 7: Description of the Body setup

7.1 Test position for Body setup

i) Procedure for SAR testing

-The tested procedure was performed according to the KDB447498 D01 (Mobile and Portable Device RF Exposure Procedures and Equipment Authorization Policies)

ii) Test mode

WLAN	**11b, 11a/n/ac**

iii) Test position

Antenna 1

No.	Position	Test distance	WLAN Tested
1	Front	0mm	☐*1)
2	Rear	0mm	☑
3	Left	0mm	☐
4	Right	0mm	☑
5	Top	0mm	☑
6	Bottom	0mm	☑

*1) For the purpose to the simultaneous transmission consideration, Front position was only performed with W52band.

Antenna 2

No.	Position	Test distance	WLAN Tested
1	Front	0mm	☑
2	Rear	0mm	☐
3	Left	0mm	☑
4	Right	0mm	☐
5	Top	0mm	☑
6	Bottom	0mm	☑

SECTION 8 : Test surrounding

8.1 Measurement uncertainty

This measurement uncertainty budget is suggested by IEEE Std 1528(2013) and IEC62209-2:2010, and determined by Schmid & Partner Engineering AG (DASY5 Uncertainty Budget). Per KDB 865664 D01 SAR Measurement 100 MHz to 6 GHz v01r04 Section 2.8.1., when the highest measured SAR(1g) within a frequency band is < 1.5W/kg, the extensive SAR measurement uncertainty analysis described in IEEE Std.1528 (2013) is not required in SAR reports submitted for equipment approval.

<0.3 – 3GHz range Body>

Error Description	Uncertai value ±	Probability distribution	divisor	(ci) 1g	Standard (1g)	vi or veff
Measurement System						
Probe calibration	± 6.00	Normal	1	1	± 6.00	∞
Axial isotropy of the probe	± 4.7	Rectangular	√3	0.7	± 1.9	∞
Spherical isotropy of the probe	± 9.6	Rectangular	√3	0.7	± 3.9	∞
Boundary effects	± 1.0	Rectangular	√3	1	± 0.6	∞
Probe linearity	± 4.7	Rectangular	√3	1	± 2.7	∞
Detection limit	± 1.0	Rectangular	√3	1	± 0.6	∞
Modulation response	± 2.4	Rectangular	√3	1	± 1.4	∞
Readout electronics	± 0.3	Normal	1	1	± 0.3	∞
Response time	± 0.8	Rectangular	√3	1	± 0.5	∞
Integration time	± 2.6	Rectangular	√3	1	± 1.5	∞
RF ambient Noise	± 3.0	Rectangular	√3	1	± 1.7	∞
RF ambient Reflections	± 3.0	Rectangular	√3	1	± 1.7	∞
Probe Positioner	± 0.4	Rectangular	√3	1	± 0.2	∞
Probe positioning	± 2.9	Rectangular	√3	1	± 1.7	∞
Max.SAR Eval.	± 2.0	Rectangular	√3	1	± 1.2	∞
Test Sample Related						
Device positioning	± 2.9	Normal	1	1	± 2.9	10
Device holder uncertainty	± 3.6	Normal	1	1	± 3.6	5
Power drift	± 5.0	Rectangular	√3	1	± 2.9	∞
Power Scaling	+ 0.0	Rectangular	√3	1	± 0.0	∞
Phantom and Setup						
Phantom uncertainty	± 6.1	Rectangular	√3	1	± 3.5	∞
Algorithm for correcting SAR for deviations in permittivity and conductivity	± 1.9	Normal	1	1	± 1.9	∞
Liquid conductivity (meas.)	+ 0.5	Rectangular	1	0.78	+ 0.4	∞
Liquid permittivity (meas.)	- 2.5	Rectangular	1	0.23	- 0.6	∞
Liquid conductivity - temp.unc (below 2deg.C.)	± 5.2	Rectangular	√3	0.78	± 2.3	∞
Liquid permittivity - temp.unc (below 2deg.C.)	± 0.8	Rectangular	√3	0.23	± 0.1	∞
Combined Standard Uncertainty					± **11.282**	
Expanded Uncertainty (k=2)					± **22.6**	

*. Table of uncertainties are listed for ISO/IEC 17025.

<3 – 6GHz range Body>

Error Description	Uncertai value ±	Probability distribution	divisor	(ci) 1g	Standard (1g)	vi or veff
Measurement System						
Probe calibration	± 6.55	Normal	1	1	± 6.55	∞
Axial isotropy of the probe	± 4.7	Rectangular	√3	0.7	± 1.9	∞
Spherical isotropy of the probe	± 9.6	Rectangular	√3	0.7	± 3.9	∞
Boundary effects	± 2.0	Rectangular	√3	1	± 1.2	∞
Probe linearity	± 4.7	Rectangular	√3	1	± 2.7	∞
Detection limit	± 1.0	Rectangular	√3	1	± 0.6	∞
Modulation response	± 2.4	Rectangular	√3	1	± 1.4	∞
Readout electronics	± 0.3	Normal	1	1	± 0.3	∞
Response time	± 0.8	Rectangular	√3	1	± 0.5	∞
Integration time	± 2.6	Rectangular	√3	1	± 1.5	∞
RF ambient Noise	± 3.0	Rectangular	√3	1	± 1.7	∞
RF ambient Reflections	± 3.0	Rectangular	√3	1	± 1.7	∞
Probe Positioner	± 0.8	Rectangular	√3	1	± 0.5	∞
Probe positioning	± 6.7	Rectangular	√3	1	± 3.9	∞
Max.SAR Eval.	± 4.0	Rectangular	√3	1	± 2.3	∞
Test Sample Related						
Device positioning	± 2.9	Normal	1	1	± 2.9	27
Device holder uncertainty	± 3.6	Normal	1	1	± 3.6	5
Power drift	± 5.0	Rectangular	√3	1	± 2.9	∞
Power Scaling	+ 0.0	Rectangular	√3	1	± 0.0	∞
Phantom and Setup						
Phantom uncertainty	± 6.6	Rectangular	√3	1	± 3.8	∞
Algorithm for correcting SAR for deviations in permittivity and conductivity	± 1.9	Normal	1	1	± 1.9	∞
Liquid conductivity (meas.)	+ 2.1	Rectangular	1	0.78	+ 1.6	∞
Liquid permittivity (meas.)	− 3.4	Rectangular	1	0.23	- 0.8	∞
Liquid conductivity - temp.unc (below 2deg.C.)	± 2.4	Rectangular	√3	0.78	± 1.1	∞
Liquid permittivity - temp.unc (below 2deg.C.)	± 0.8	Rectangular	√3	0.23	± 0.1	∞
Combined Standard Uncertainty					**± 12.335**	
Expanded Uncertainty (k=2)					**± 24.7**	

*. Table of uncertainties are listed for ISO/IEC 17025.

SECTION 9 : Measurement results

9.1 Body SAR of 2.4GHz

(1)Method of measurement

Step.1 The searching for the worst position *1*2
The test was performed at the highest power channel of DSSS.
Step.2 The changing of the channel *3
The test was performed at the worst position of Step.1.
Step.3 The repeated measurement *4
The test was performed at the worst condition of Step1 to Step2.

Note:
*1 Highest measured output power channel was tested initially according to KDB248227D01.

*2 SAR is not required for the following 2.4 GHz OFDM conditions according to KDB248227D01.
1) When KDB447498D01 SAR test exclusion applies to the OFDM configuration.
2) When the highest reported SAR for DSSS is adjusted by the ratio of OFDM to DSSS specified maximum output power and the adjusted SAR is ≤ 1.2 W/kg. Refer to (4) OFDM mode exclusion considerations.

*3 According to KDB248227D01
1) When the *reported* SAR of the highest measured maximum output power channel for the exposure configuration is ≤ 0.8 W/kg, no further SAR testing is required for 802.11b DSSS in that exposure configuration.
2) When the *reported* SAR is > 0.8 W/kg, SAR is required for that exposure configuration using the next highest measured output power channel. When any *reported* SAR is > 1.2 W/kg, SAR is required for the third channel.

*4 According to KDB865664 D1.
1) Repeated measurement is not required when the original highest measured SAR is < 0.80 W/kg; steps 2) through 4) do not apply.
2) When the original highest measured SAR is ≥ 0.80 W/kg, repeat that measurement once.
3) Perform a second repeated measurement only if the ratio of largest to smallest SAR for the original and first repeated measurements is > 1.20 or when the original or repeated measurement is ≥ 1.45 W/kg (~ 10% from the 1-g SAR limit).
4) Perform a third repeated measurement only if the original, first or second repeated measurement is ≥ 1.5 W/kg and the ratio of largest to smallest SAR for the original, first and second repeated measurements is > 1.20.

(2)Simulated Tissue Liquid Parameter confirmation

The dielectric parameters were checked prior to assessment using the DAK dielectric probe kit.
The dielectric parameters measurement is reported in each correspondent section.

DIELECTRIC PARAMETERS MEASUREMENT RESULTS											
Date	Ambient Temp. [deg.c]	Relative Humidity [%]	Liquid type	Liquid Temp. [deg.c]	Measured Frequency [MHz]	Parameters	Target Value	Measured	Deviation [%]	Limit [%]	Remark
-	-	-	-	-	2000	εr	53.3	-	-	-	*1
						σ [mho/m]	1.52	-	-	-	
4-Nov	24.0	41	MSL 2450	23.5	2437	εr	52.7	51.4	-2.5	+/-5	*2
						σ [mho/m]	1.94	1.94	-0.3	+/-5	
-	-	-	-	-	2450	εr	52.7	-	-	-	*1
						σ [mho/m]	1.95	-	-	-	
4-Nov	24.0	41	MSL 2450	23.5	2462	εr	52.7	51.4	-2.5	+/-5	*2
						σ [mho/m]	1.97	1.98	0.5	+/-5	
-	-	-	-	-	3000	εr	52.0	-	-	-	*1
						σ [mho/m]	2.73	-	-	-	

εr: Relative Permittivity / σ : Coductivity
*1 The Target value is a parameter defined in KDB 865664D01.
*2 The dielectric parameters should be linearly interpolated between the closest pair of target frequencies to determine the applicable dielectric parameters corresponding to the device test frequency.

(3)Result of Body SAR

Antenna 1

SAR MEASUREMENT RESULTS														
Frequency		Modulation	Measured power		Maximum tune-up tolerance limit		Phantom Section	EUT Set-up Conditions			Measured SAR(1g) [W/kg]	Scaled factor *1	Reported SAR(1g) [W/kg] *2	Note(s)
Channel	[MHz]		[dBm]	[mW]	[dBm]	[mW]		Antenna	Position	Separation [mm]				
Step.1 The searching for the worst position														
11	2462	11b 1Mbps	9.08	8.09	10.00	10.00	Flat	Fixed	Rear	0	**0.750**	**1.236**	**0.927**	
11	2462	11b 1Mbps	9.08	8.09	10.00	10.00	Flat	Fixed	Top	0	**0.017**	**1.236**	**0.021**	
11	2462	11b 1Mbps	9.08	8.09	10.00	10.00	Flat	Fixed	Bottom	0	**0.012**	**1.236**	**0.015**	
11	2462	11b 1Mbps	9.08	8.09	10.00	10.00	Flat	Fixed	Right	0	**0.00592**	**1.236**	**0.00732**	
Step.2 Channel change (SAR level in Step.1 > 0.8 W/kg)														
6	2437	11b 1Mbps	8.98	7.91	10.00	10.00	Flat	Fixed	Rear	0	**0.697**	**1.265**	**0.882**	

Antenna 2

SAR MEASUREMENT RESULTS														
Frequency		Modulation	Measured power		Maximum tune-up tolerance limit		Phantom Section	EUT Set-up Conditions			Measured SAR(1g) [W/kg]	Scaled factor *1	Reported SAR(1g) [W/kg] *2	Note(s)
Channel	[MHz]		[dBm]	[mW]	[dBm]	[mW]		Antenna	Position	Separation [mm]				
Step.1 The searching for the worst position														
6	2437	11b 1Mbps	9.31	8.53	10.00	10.00	Flat	Fixed	Front	0	**0.803**	**1.172**	**0.941**	
6	2437	11b 1Mbps	9.31	8.53	10.00	10.00	Flat	Fixed	Top	0	**0.032**	**1.172**	**0.038**	
6	2437	11b 1Mbps	9.31	8.53	10.00	10.00	Flat	Fixed	Bottom	0	**0.019**	**1.172**	**0.022**	
6	2437	11b 1Mbps	9.31	8.53	10.00	10.00	Flat	Fixed	Left	0	**0.013**	**1.172**	**0.015**	
Step.2 Channel change (SAR level in Step.1 > 0.8 W/kg)														
11	2462	11b 1Mbps	9.20	8.32	10.00	10.00	Flat	Fixed	Front	0	**0.851**	**1.202**	**1.023**	***3**
Step.3 Repeat measurement of worst mode (Measured SAR value in Step.1 to Step.2 > 0.8 w/kg)														
11	2462	11b 1Mbps	9.20	8.32	10.00	10.00	Flat	Fixed	Front	0	**0.844**	**1.202**	**1.015**	

OFDM was excluded from the following table according to KDB248227D01.

Maximum tune-up tolerance limit		Maximum tune-up tolerance limit		OFDM scaled factor *4	Position	DSSS Reported SAR value [W/kg]	OFDM Estimated SAR value [W/kg] *5	Exclusion limit [W/kg]	**Standalone SAR tested**
DSSS		OFDM							
[dBm]	[mW]	[dBm]	[mW]						
10.00	10.00	10.00	10.00	1.000	**Front**	**1.023**	**1.023**	< 1.2	**No**

Notes:

1. Scaled factor = Maximum tune-up tolerance limit [mW] / Measured power [mW]
2. Reported SAR= Measured SAR [W/kg] · Scaled factor
3. OFDM mode exclusion considerations
4. OFDM scaled factor = Maximum tune-up tolerance limit of OFDM [mW] / Maximum tune-up tolerance limit of DSSS [mW]
5. Estimated SAR of OFDM= Reported SAR of DSSS[W/kg] · OFDM scaled factor

9.2 Body SAR of 5.2GHz

(1)Method of measurement

Step.1 The searching for the worst position *1 *2
The test was performed at the highest power channel of 5.2GHz band 11ac40 MCS0.
Step.2 The changing of the channel *3
The test was performed at the worst position of Step.1.
Step.3 The repeated measurement *4
The test was performed at the worst condition of Step1 to Step2.

Notes:

*1 According to KDB248227D01
1) The largest channel bandwidth configuration is selected among the multiple configurations in a frequency band with the same specified maximum output power.
2) If multiple configurations have the same specified maximum output power and largest channel bandwidth, the lowest order modulation among the largest channel bandwidth configurations is selected.
3) If multiple configurations have the same specified maximum output power, largest channel bandwidth and lowest order modulation, the lowest data rate configuration among these configurations is selected.
4) When multiple transmission modes (802.11a/g/n/ac) have the same specified maximum output power, largest channel bandwidth, lowest order modulation and lowest data rate, the lowest order 802.11 mode is selected.

*2 SAR is not required for the following OFDM U-NII-1(5.2 GHz band) conditions according to KDB248227D01.
1) When the same maximum output power is specified for both bands, begin SAR measurement in U-NII-2A(5.3GHz band) band by applying the OFDM SAR requirements. If the highest *reported* SAR for a test configuration is ≤ 1.2 W/kg, SAR is not required for U-NII-1(5.2GHz band) band for that configuration (802.11 mode and exposure condition); otherwise, each band is tested independently for SAR.
2) When different maximum output power is specified for the bands, begin SAR measurement in the band with higher specified maximum output power. The highest *reported* SAR for the tested configuration is adjusted by the ratio of lower to higher specified maximum output power for the two bands. When the adjusted SAR is ≤ 1.2 W/kg, SAR is not required for the band with lower maximum output power in that test configuration; otherwise, each band is tested independently for SAR.

*3 According to KDB248227D01
When the *reported* SAR of the initial test configuration is > 0.8 W/kg, SAR measurement is required for subsequent next highest measured output power channel(s) in the initial test configuration until *reported* SAR is ≤ 1.2 W/kg or all required channels are tested.

*4 According to KDB865664 D1.
1) Repeated measurement is not required when the original highest measured SAR is < 0.80 W/kg; steps 2) through 4) do not apply.
2) When the original highest measured SAR is ≥ 0.80 W/kg, repeat that measurement once.
3) Perform a second repeated measurement only if the ratio of largest to smallest SAR for the original and first repeated measurements is > 1.20 or when the original or repeated measurement is ≥ 1.45 W/kg (~ 10% from the 1-g SAR limit).
4) Perform a third repeated measurement only if the original, first or second repeated measurement is ≥ 1.5 W/kg and the ratio of largest to smallest SAR for the original, first and second repeated measurements is > 1.20.

(2)Simulated Tissue Liquid Parameter confirmation

The dielectric parameters were checked prior to assessment using the DAK dielectric probe kit.
The dielectric parameters measurement is reported in each correspondent section.

DIELECTRIC PARAMETERS MEASUREMENT RESULTS											
Date	Ambient Temp. [deg.c]	Relative Humidity [%]	Liquid type	Liquid Temp. [deg.c]	Measured Frequency [MHz]	Parameters	Target Value	Measured	Deviation [%]	Limit [%]	Remark
-	-	-	-	-	3000	εr	52.0	-	-	-	*1
						σ [mho/m]	2.73	-	-	-	
26-Nov	24.0	55	MBBL 3.5-5.8	23.5	5190	εr	49.0	47.5	-3.2	+/-5	*2
						σ [mho/m]	5.29	5.32	0.5	+/-5	
30-Nov	24.0	56	MBBL 3.5-5.8	23.5	5190	εr	49.0	47.8	-2.6	+/-5	*2
						σ [mho/m]	5.29	5.24	-0.9	+/-5	
30-Nov	24.0	56	MBBL 3.5-5.8	23.5	5200	εr	49.0	47.7	-2.6	+/-5	*2
						σ [mho/m]	5.30	5.24	-1.0	+/-5	
30-Nov	24.0	56	MBBL 3.5-5.8	23.5	5220	εr	49.0	47.6	-2.9	+/-5	*2
						σ [mho/m]	5.32	5.31	-0.3	+/-5	
26-Nov	24.0	56	MBBL 3.5-5.8	23.5	5230	εr	49.0	49.0	0.0	+/-5	*2
						σ [mho/m]	5.33	5.42	1.7	+/-5	
30-Nov	24.0	56	MBBL 3.5-5.8	23.5	5230	εr	49.0	47.6	-2.7	+/-5	*2
						σ [mho/m]	5.33	5.34	0.2	+/-5	
30-Nov	24.0	56	MBBL 3.5-5.8	23.5	5240	εr	49.0	47.6	-2.9	+/-5	*2
						σ [mho/m]	5.35	5.35	0.1	+/-5	
-	-	-	MBBL 3.5-5.8	-	5800	εr	48.2	-	-	+/-5	*1
						σ [mho/m]	6.00	-	-	+/-5	

εr: Relative Permittivity / σ : Coductivity
*1 The Target value is a parameter defined in KDB 865664D01.
*2 The dielectric parameters should be linearly interpolated between the closest pair of target frequencies to determine the applicable dielectric parameters corresponding to the device test frequency.

(3)Result of Body SAR

Antenna 1

SAR MEASUREMENT RESULTS														
Frequency		Modulation	Measured power		Maximum tune-up tolerance limit		Phantom Section	EUT Set-up Conditions			Measured SAR(1g) [W/kg]	Scaled factor *1	Reported SAR(1g) [W/kg] *2	Note(s)
Channel	[MHz]		[dBm]	[mW]	[dBm]	[mW]		Antenna	Position	Separation [mm]				
Step.1 The searching for the worst position														
38	5190	11ac40 MCS0	8.67	7.36	9.50	8.91	Flat	Fixed	Front	0	**0.000**	**1.211**	**0.000**	
38	5190	11ac40 MCS0	8.67	7.36	9.50	8.91	Flat	Fixed	Rear	0	**0.801**	**1.211**	**0.970**	
38	5190	11ac40 MCS0	8.67	7.36	9.50	8.91	Flat	Fixed	Top	0	**0.047**	**1.211**	**0.057**	
38	5190	11ac40 MCS0	8.67	7.36	9.50	8.91	Flat	Fixed	Bottom	0	**0.000**	**1.211**	**0.000**	
38	5190	11ac40 MCS0	8.67	7.36	9.50	8.91	Flat	Fixed	Right	0	**0.00934**	**1.211**	**0.01131**	
Step.2 Channel change (SAR level in Step.1 > 0.8 W/kg)														
46	5230	11ac40 MCS0	8.44	6.98	9.50	8.91	Flat	Fixed	Rear	0	**0.915**	**1.276**	**1.168**	
Step.3 Repeat measurement of worst mode (Measured SAR value in Step.1 to Step.4 > 0.8 w/kg)														
46	5230	11ac40 MCS0	8.44	6.98	9.50	8.91	Flat	Fixed	Rear	0	**0.902**	**1.276**	**1.151**	

Antenna 2

SAR MEASUREMENT RESULTS														
Frequency		Modulation	Measured power		Maximum tune-up tolerance limit		Phantom Section	EUT Set-up Conditions			Measured SAR(1g) [W/kg]	Scaled factor *1	Reported SAR(1g) [W/kg] *2	Note(s)
Channel	[MHz]		[dBm]	[mW]	[dBm]	[mW]		Antenna	Position	Separation [mm]				
Step.1 The searching for the worst position														
46	5230	11ac40 MCS0	8.87	7.71	9.50	8.91	Flat	Fixed	Front	0	**1.170**	**1.156**	**1.353**	
46	5230	11ac40 MCS0	8.87	7.71	9.50	8.91	Flat	Fixed	Top	0	**0.286**	**1.156**	**0.331**	
46	5230	11ac40 MCS0	8.87	7.71	9.50	8.91	Flat	Fixed	Bottom	0	**0.032**	**1.156**	**0.037**	
46	5230	11ac40 MCS0	8.87	7.71	9.50	8.91	Flat	Fixed	Left	0	**0.019**	**1.156**	**0.022**	
Step.2 Channel change (SAR level in Step.1 > 0.8 W/kg)														
38	5190	11ac40 MCS0	8.81	7.60	9.50	8.91	Flat	Fixed	Front	0	**1.060**	**1.172**	**1.243**	
Step.3 Mode change (Next highest measured output power channel(s) in the initial test configuration until reported SAR is ≤ 1.2 W/kg)														
46	5230	11n40 MCS0	9.07	8.07	9.50	8.91	Flat	Fixed	Front	0	**1.160**	**1.104**	**1.281**	
38	5190	11n40 MCS0	8.66	7.35	9.50	8.91	Flat	Fixed	Front	0	**0.995**	**1.213**	**1.207**	
48	5240	11a 6Mbps	9.24	8.39	9.50	8.91	Flat	Fixed	Front	0	**1.310**	**1.062**	**1.391**	***3**
44	5220	11a 6Mbps	9.20	8.32	9.50	8.91	Flat	Fixed	Front	0	**1.210**	**1.072**	**1.297**	
40	5200	11a 6Mbps	9.18	8.28	9.50	8.91	Flat	Fixed	Front	0	**1.090**	**1.076**	**1.173**	
Step.3 Repeat measurement of worst mode (Measured SAR value in Step.1 to Step.2 > 0.8 w/kg)														
48	5240	11a 6Mbps	9.24	8.39	9.50	8.91	Flat	Fixed	Front	0	**1.200**	**1.062**	**1.274**	

OFDM 5.3GHz band was excluded from the following table according to KDB248227D01.

Maximum tune-up tolerance limit OFDM 5.2GHz band		Maximum tune-up tolerance limit OFDM 5.3GHz band		OFDM scaled	Position	OFDM 5.2GHz band Reported SAR value [W/kg]	OFDM 5.3GHz band Estimated SAR value [W/kg] *5	Exclusion limit [W/kg]	**Standalone SAR tested**
[dBm]	[mW]	[dBm]	[mW]						
9.50	8.91	8.50	7.08	0.794	**Front**	**1.391**	**1.10**	< 1.2	**No**

Notes:

1. Scaled factor = Maximum tune-up tolerance limit [mW] / Measured power [mW]
2. Reported SAR= Measured SAR [W/kg] · Scaled factor
3. OFDM 5.3GHz band mode exclusion considerations
4. Scaled factor = Maximum tune-up tolerance limit of OFDM 5.2GHz band [mW] / Maximum tune-up tolerance limit of 5.3GHz band [mW]
5. Estimated SAR of OFDM 5.2GHz band= Reported SAR of 5.2GHz band [W/kg] ·OFDM scaled factor

9.3 Body SAR of 5.8GHz

(1)Method of measurement

Step.1 The searching for the worst position *1 *2
The test was performed at the highest power channel of 5.8GHz band 11ac40 MCS0.
Step.2 The changing of the channel *3
The test was performed at the worst position of Step.1.
Step.3 The repeated measurement *4
The test was performed at the worst condition of Step1 to Step2.

Note:
*1 According to KDB248227D01
1) The largest channel bandwidth configuration is selected among the multiple configurations in a frequency band with the same specified maximum output power.
2) If multiple configurations have the same specified maximum output power and largest channel bandwidth, the lowest order modulation among the largest channel bandwidth configurations is selected.
3) If multiple configurations have the same specified maximum output power, largest channel bandwidth and lowest order modulation, the lowest data rate configuration among these configurations is selected.
4) When multiple transmission modes (802.11a/g/n/ac) have the same specified maximum output power, largest channel bandwidth, lowest order modulation and lowest data rate, the lowest order 802.11 mode is selected.

*2 SAR is not required for the following OFDM U-NII-1(5.2 GHz band) conditions according to KDB248227D01.
1) When the same maximum output power is specified for both bands, begin SAR measurement in U-NII-2A(5.3GHz band) band by applying the OFDM SAR requirements. If the highest *reported* SAR for a test configuration is ≤ 1.2 W/kg, SAR is not required for U-NII-1(5.2GHz band) band for that configuration (802.11 mode and exposure condition); otherwise, each band is tested independently for SAR.
2) When different maximum output power is specified for the bands, begin SAR measurement in the band with higher specified maximum output power. The highest *reported* SAR for the tested configuration is adjusted by the ratio of lower to higher specified maximum output power for the two bands. When the adjusted SAR is ≤ 1.2 W/kg, SAR is not required for the band with lower maximum output power in that test configuration; otherwise, each band is tested independently for SAR.

*3 According to KDB248227D01
When the *reported* SAR of the initial test configuration is > 0.8 W/kg, SAR measurement is required for subsequent next highest measured output power channel(s) in the initial test configuration until *reported* SAR is ≤ 1.2 W/kg or all required channels are tested.

*4 According to KDB865664 D1.
1) Repeated measurement is not required when the original highest measured SAR is < 0.80 W/kg; steps 2) through 4) do not apply.
2) When the original highest measured SAR is ≥ 0.80 W/kg, repeat that measurement once.
3) Perform a second repeated measurement only if the ratio of largest to smallest SAR for the original and first repeated measurements is > 1.20 or when the original or repeated measurement is ≥ 1.45 W/kg (~ 10% from the 1-g SAR limit).
4) Perform a third repeated measurement only if the original, first or second repeated measurement is ≥ 1.5 W/kg and the ratio of largest to smallest SAR for the original, first and second repeated measurements is > 1.20.

(2)Simulated Tissue Liquid Parameter confirmation

The dielectric parameters were checked prior to assessment using the DAK dielectric probe kit.
The dielectric parameters measurement is reported in each correspondent section.

DIELECTRIC PARAMETERS MEASUREMENT RESULTS											
Date	Ambient Temp. [deg.c]	Relative Humidity [%]	Liquid type	Liquid Temp. [deg.c]	Measured Frequency [MHz]	Parameters	Target Value	Measured	Deviation [%]	Limit [%]	Remark
-	-	-	-	-	3000	εr	52.0	-	-	-	*1
						σ [mho/m]	2.73	-	-	-	
30-Nov	24.0	50	MBBL 3.5-5.8	23.5	5755	εr	48.3	46.8	-3.0	+/-5	*2
						σ [mho/m]	5.95	6.08	2.1	+/-5	
30-Nov	24.0	50	MBBL 3.5-5.8	23.5	5795	εr	48.2	46.8	-2.9	+/-5	*2
						σ [mho/m]	5.99	6.08	1.4	+/-5	
-	-	-	MBBL 3.5-5.8	-	5800	εr	48.2	-	-	+/-5	*1
						σ [mho/m]	6.00	-	-	+/-5	

εr: Relative Permittivity / σ : Coductivity
*1 The Target value is a parameter defined in KDB 865664D01.
*2 The dielectric parameters should be linearly interpolated between the closest pair of target frequencies to determine the applicable dielectric parameters corresponding to the device test frequency.

(3)Result of Body SAR

Antenna 1

SAR MEASUREMENT RESULTS														
Frequency		Modulation	Measured power		Maximum tune-up tolerance limit		Phantom Section	EUT Set-up Conditions			Measured SAR(1g) [W/kg]	Scaled factor *1	Reported SAR(1g) [W/kg] *2	Note(s)
Channel	[MHz]		[dBm]	[mW]	[dBm]	[mW]		Antenna	Position	Separation [mm]				
Step.1 The searching for the worst position														
159	5795	11ac40 MCS0	9.10	8.13	9.50	8.91	Flat	Fixed	Rear	0	**0.600**	**1.096**	**0.658**	
159	5795	11ac40 MCS0	9.10	8.13	9.50	8.91	Flat	Fixed	Top	0	**0.050**	**1.096**	**0.054**	
159	5795	11ac40 MCS0	9.10	8.13	9.50	8.91	Flat	Fixed	Bottom	0	**0.012**	**1.096**	**0.013**	
159	5795	11ac40 MCS0	9.10	8.13	9.50	8.91	Flat	Fixed	Right	0	**0.019**	**1.096**	**0.021**	

Antenna 2

SAR MEASUREMENT RESULTS														
Frequency		Modulation	Measured power		Maximum tune-up tolerance limit		Phantom Section	EUT Set-up Conditions			Measured SAR(1g) [W/kg]	Scaled factor *1	Reported SAR(1g) [W/kg] *2	Note(s)
Channel	[MHz]		[dBm]	[mW]	[dBm]	[mW]		Antenna	Position	Separation [mm]				
Step.1 The searching for the worst position														
159	5795	11ac40 MCS0	9.45	8.81	9.50	8.91	Flat	Fixed	Front	0	**1.140**	**1.012**	**1.153**	
159	5795	11ac40 MCS0	9.45	8.81	9.50	8.91	Flat	Fixed	Top	0	**0.202**	**1.012**	**0.204**	
159	5795	11ac40 MCS0	9.45	8.81	9.50	8.91	Flat	Fixed	Bottom	0	**0.023**	**1.012**	**0.023**	
159	5795	11ac40 MCS0	9.45	8.81	9.50	8.91	Flat	Fixed	Left	0	**0.020**	**1.012**	**0.020**	
Step.2 Channel change (SAR level in Step.1 to 2 > 0.8 W/kg)														
151	5755	11ac40 MCS0	8.14	6.52	8.50	7.08	Flat	Fixed	Front	0	**0.729**	**1.086**	**0.792**	
Step.3 Repeat measurement of worst mode (Measured SAR level in Step.1 > 0.8 w/kg)														
159	5795	11ac40 MCS0	9.45	8.81	9.50	8.91	Flat	Fixed	Front	0	**1.060**	**1.012**	**1.07**	

Notes:

1. Scaled factor = Maximum tune-up tolerance limit [mW] / Measured power [mW]
2. Reported SAR= Measured SAR [W/kg] · Scaled factor

SECTION 10 Simultaneous Transmission SAR Analysis

10.1 Simultaneous Transmission SAR Consideration

Test Position	WiFi 2.4 GHz Antenna 1	WiFi 2.4 GHz Antenna 2	WiFi 5.2 GHz Antenna 1	WiFi 5.2 GHz Antenna 2	WiFi 5.8 GHz Antenna 1	WiFi 5.8 GHz Antenna 2	∑ 1-g SAR (mW/g)
Top	0.021	0.038					0.059
			0.057	0.331			0.388
					0.054	0.204	0.258
Bottom	0.015	0.022					0.037
			0.000	0.037			0.037
					0.013	0.023	0.036
Right	0.00732	0.400					0.407
			0.01131	0.400			0.411
					0.021	0.400	0.421
Left	0.400	0.015					0.415
			0.400	0.022			0.422
					0.400	0.020	0.420
Front	0.400	1.023					1.423
			0.000	1.391			1.391
					0.400	1.153	1.553
Rear	0.927	0.400					1.327
			1.168	0.400			1.568
					0.658	0.400	1.058

Note(s):

1. Shaded blue cells are used estimated SAR value.
2. Simultaneous transmission SAR measurement (Volume Scan) is not required because the either sum of the 1-g SAR is < 1.6 W/kg or the SPLSR is < 0.04 for all circumstances that require SPLSR calculation.

SECTION 11 Test instruments

Control No.	Instrument	Manufacturer	Model No	Serial No	Test Item	Calibration Date * Interval(month)
MNA-03	Vector Reflectometer	Copper Mountain Technologies	PLANAR R140	0030913	SAR	2015/10/30 * 12
MDPK-03	Dielectric assessment kit	Schmid&Partner Engineering AG	DAK-3.5	0008	SAR	2015/03/10 * 12
MOS-37	Digital thermometer	LKM electronic	DTM3000	-	SAR	2015/07/07 * 12
COTS-MSAR-04	Dielectric assessment software	Schmid&Partner Engineering AG	DAK		SAR	-
MPM-11	Dual Power Meter	Agilent	E4419B	MY45102060	SAR	2015/08/04 * 12
MPSE-15	Power sensor	Agilent	E9301A	MY41498311	SAR	2015/08/04 * 12
MPSE-16	Power sensor	Agilent	E9301A	MY41498313	SAR	2015/08/04 * 12
MRFA-24	Pre Amplifier	R&K	R&K CGA020M602-2633R	B30550	SAR	2015/06/15 * 12
MSG-13	Signal Generator	Rohde & Schwarz	SMA 100A	103764	SAR	2015/06/15 * 12
MAT-78	Attenuator	Telegrartner	J01156A0011	0042294119	SAR	Pre Check
MPSE-25	Power sensor	Anritsu	MA24106A	1031504	SAR	2015/08/17 * 12
MAT-81	Attenuator	Weinschel Associates	WA1-20-33	100131	SAR	2015/05/04 * 12
COTS-MPSE	Software for MA24106A	Anritsu	Anritsu Power meter software	-	SAR	-
MHDC-12	Dual Directional Coupler	Hewlett Packard	772D	2839A0016	SAR(2-18GHz)	Pre Check
MDA-07	Dipole Antenna	Schmid&Partner Engineering AG	D2450V2	713	SAR(D2450)	2013/09/10 * 36
MMSL2450	Tissue simulation liqud (Body)	Schmid&Partner Engineering AG	MSL2450V2	SL AA 245 BA	SAR*Daily Check Target Value ±5%	Pre Check
MDA-08	Dipole Antenna	Schmid&Partner Engineering AG	D5GHzV2	1020	SAR(D5G)	2015/01/13 * 12
MMBBL3.5-5.8	Tissue simulation liqud (Body)	Schmid&Partner Engineering AG	MBBL3500-5800V5	SL AAM 501 DA	SAR*Daily Check Target Value ±5%	Pre Check
MDAE-03	Data Acquisition Electronics	Schmid&Partner Engineering AG	DAE4	1372	SAR	2015/06/15 * 12
MPB-09	Dosimetric E-Field Probe	Schmid&Partner Engineering AG	EX3DV4	3922	SAR	2015/06/17 * 12
MPF-04	2mm Oval Flat Phantom	Schmid&Partner Engineering AG	QDOVA001BB	1207	SAR	2015/05/11 * 12
MDH-03	Device holder	Schmid&Partner Engineering AG	Mounting device for transmitter	-	SAR	Pre Check
MOS-35	Digital thermometer	HANNA	Checktemp 4	-	SAR	2015/07/07 * 12
COTS-MSAR-03	Dasy5	Schmid&Partner Engineering AG	DASY5	-	SAR	-
MRBT-04	SAR robot	Schmid&Partner Engineering AG	TX60 Lspeag	F13/5PP1A1/A/01	SAR	2015/06/23 * 12

The expiration date of the calibration is the end of the expired month.
All equipment is calibrated with valid calibrations. Each measurement data is traceable to the national or international standards.
As for some calibrations performed after the tested dates, those test equipment have been controlled by means of an unbroken chains of calibrations.

*Ambient noise checked by daily for SAR room is <0.012W/kg

APPENDIX 1 : SAR Measurement data

1. Evaluation procedure

The evaluation was performed with the following procedure:

Step 1: Measurement of the E-field at a fixed location above the ear point or central position of flat phantom was used as a reference value for assessing the power drop.

Step 2: The SAR distribution at the exposed side of head or body position was measured at a distance of each device from the inner surface of the shell. The area covered the entire dimension of the antenna of EUT and the horizontal grid spacing was 15 mm x 15 mm, 12 mm x 12 mm or 10mm x 10mm. Based on these data, the area of the maximum absorption was determined by spline interpolation.

Step 3: Around this point found in the Step 2 (area scan), a volume of 30mm x 30mm x 30mm or more was assessed by measuring 7 x 7 x 7 points at least for below 3GHz and a volume of 28 mm x 28mm x 22.5mm or more was assessed by measuring 8 x 8 x 6(ratio step method (*1)) points at least for 5GHz band.

And for any secondary peaks found in the Step2 which are within 2dB of maximum peak and not with this Step3 (Zoom scan) is repeated. On the basis of this data set, the spatial peak SAR value was evaluated under the following procedure:

(1). The data at the surface were extrapolated, since the center of the dipoles is 1mm(EX3DV4) away from the tip of the probe and the distance between the surface and the lowest measuring point is 1.3 mm. The extrapolation was based on a least square algorithm [4]. A polynomial of the fourth order was calculated through the points in z-axes.
This polynomial was then used to evaluate the points between the surface and the probe tip.

(2). The maximum interpolated value was searched with a straightforward algorithm. Around this maximum the SAR values averaged over the spatial volumes (1 g or 10 g) were computed by the 3D-Spline interpolation algorithm. The 3D-Spline is composed of three one-dimensional splines with the “Not a knot"-condition (in x, y and z-directions) [4], [5]. The volume was integrated with the trapezoidal-algorithm. One thousand points (10 x 10 x 10) were interpolated to calculate the average.

(3). All neighboring volumes were evaluated until no neighboring volume with a higher average value was found.

Step 4: Re-measurement of the E-field at the same location as in Step 1.
It was checked that the power drift [W] is within +/-5%.The verification of power drift during the SAR test is that DASY5 system calculates the power drift by measuring the e-filed at the same location at beginning and the end of the scan measurement for each test position.
DASY5 system calculation Power drift value[dB] =20log(Ea)/(Eb)
Before SAR testing : Eb[V/m]
After SAR testing : Ea[V/m]
Limit of power drift[W] =+/-5%
X[dB]=10log[P]=10log(1.05/1)=10log(1.05)-10log(1)=0.212dB
from E-filed relations with power.
p=E^2/η=E^2/
Therefore, The correlation of power and the E-filed
XdB=10log(P)=10log(E)^2=20log(E)
Therefore,
The calculated power drift of DASY5 System must be the less than +/-0.212dB.

***1. Ratio step method parameters used;**
The first measurement point: 2mm from the phantom surface, the initial grid separation: 2mm, subsequent graded grid ratio: 1.5
These parameters comply with the requirement of the KDB 865664D01.

2. Measurement data(2.4GHz)

WLAN 2.4G Antenna 1 11b 1Mbps 2462MHz Rear 0mm
Communication System: UID 0, WLAN (0); Communication System Band: 11b/g/n; Frequency: 2462 MHz; Duty Cycle: 1:1
Medium parameters used (interpolated): f = 2462 MHz; σ = 1.98 S/m; ε_r = 51.374; ρ = 1000 kg/m^3
Phantom section: Flat Section
Measurement Standard: DASY5 (IEEE/IEC/ANSI C63.19-2007)
DASY5 Configuration
Probe: EX3DV4 - SN3922; ConvF(7.49, 7.49, 7.49); Calibrated: 2015/06/17;
Sensor-Surface: 1.4mm (Mechanical Surface Detection)
Electronics: DAE4 Sn1372; Calibrated: 2015/06/15
Phantom: ELI v5.0 TP1207; Type: QDOVA001BB; Serial: TP:1207
Measurement SW: DASY52, Version 52.8 (8); SEMCAD X Version 14.6.10 (7331)

Area Scan (51x131x1): Interpolated grid: dx=1.200 mm, dy=1.200 mm
Maximum value of SAR (interpolated) = 1.57 W/kg

Zoom Scan (7x7x7)/Cube 0: Measurement grid: dx=5mm, dy=5mm, dz=5mm
Reference Value = 29.29 V/m; Power Drift = 0.05 dB
Peak SAR (extrapolated) = 2.24 W/kg
SAR(1 g) = 0.750 W/kg; SAR(10 g) = 0.244 W/kg
Maximum value of SAR (measured) = 1.63 W/kg

Date: 2015/11/04
Ambient Temp. : 24.0 degree.C. Liquid Temp.; 23.5 degree.C.

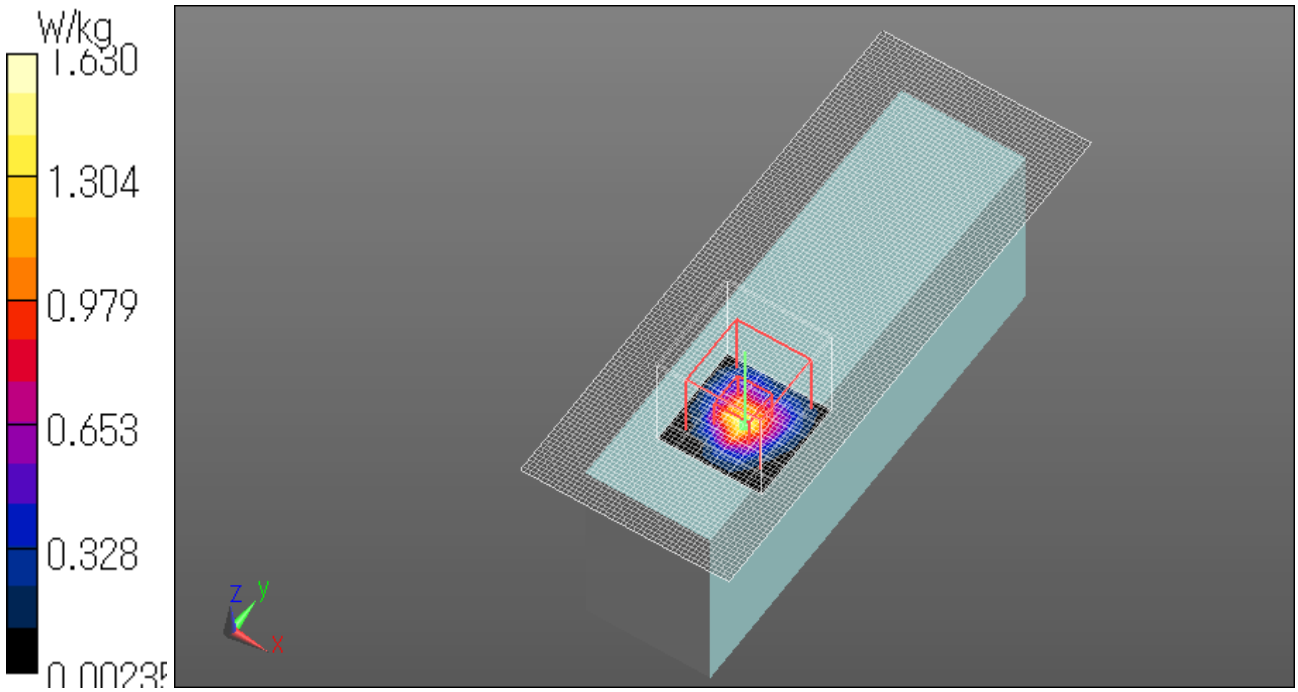

WLAN 2.4G Antenna 1 11b 1Mbps 2462MHz Top 0mm
Communication System: UID 0, WLAN (0); Communication System Band: 11b/g/n; Frequency: 2462 MHz; Duty Cycle: 1:1
Medium parameters used (interpolated): f = 2462 MHz; σ = 1.98 S/m; ε_r = 51.374; ρ = 1000 kg/m^3
Phantom section: Flat Section
Measurement Standard: DASY5 (IEEE/IEC/ANSI C63.19-2007)
DASY5 Configuration
Probe: EX3DV4 - SN3922; ConvF(7.49, 7.49, 7.49); Calibrated: 2015/06/17;
Sensor-Surface: 1.4mm (Mechanical Surface Detection)
Electronics: DAE4 Sn1372; Calibrated: 2015/06/15
Phantom: ELI v5.0 TP1207; Type: QDOVA001BB; Serial: TP:1207
Measurement SW: DASY52, Version 52.8 (8); SEMCAD X Version 14.6.10 (7331)

Area Scan (81x131x1): Interpolated grid: dx=1.200 mm, dy=1.200 mm
Maximum value of SAR (interpolated) = 0.0274 W/kg

Zoom Scan (9x8x7)/Cube 0: Measurement grid: dx=5mm, dy=5mm, dz=5mm
Reference Value = 3.518 V/m; Power Drift = 0.15 dB
Peak SAR (extrapolated) = 0.0380 W/kg
SAR(1 g) = 0.017 W/kg; SAR(10 g) = 0.00989 W/kg
Maximum value of SAR (measured) = 0.0286 W/kg

Date: 2015/11/04
Ambient Temp. : 24.0 degree.C. Liquid Temp.; 23.5 degree.C.

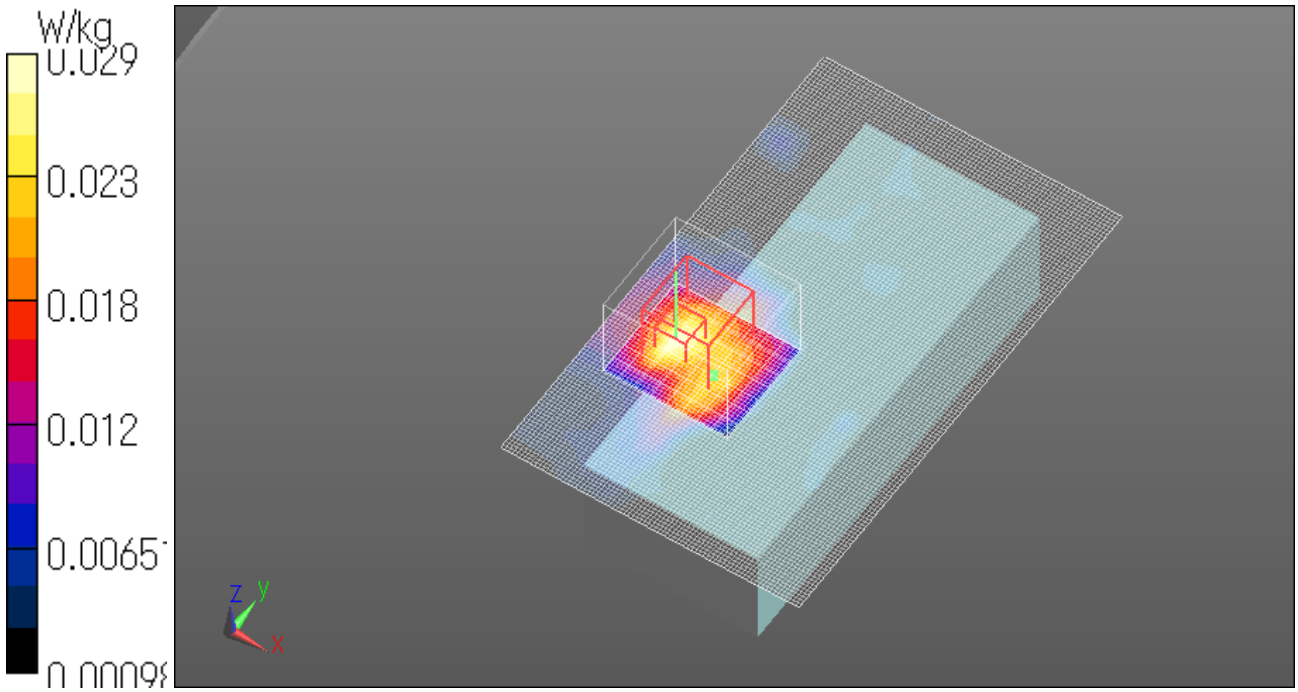

WLAN 2.4G Antenna 1 11b 1Mbps 2462MHz Bottom 0mm
Communication System: UID 0, WLAN (0); Communication System Band: 11b/g/n; Frequency: 2462 MHz; Duty Cycle: 1:1
Medium parameters used (interpolated): f = 2462 MHz; σ = 1.98 S/m; ε_r = 51.374; ρ = 1000 kg/m^3
Phantom section: Flat Section
Measurement Standard: DASY5 (IEEE/IEC/ANSI C63.19-2007)
DASY5 Configuration
Probe: EX3DV4 - SN3922; ConvF(7.49, 7.49, 7.49); Calibrated: 2015/06/17;
Sensor-Surface: 1.4mm (Mechanical Surface Detection)
Electronics: DAE4 Sn1372; Calibrated: 2015/06/15
Phantom: ELI v5.0 TP1207; Type: QDOVA001BB; Serial: TP:1207
Measurement SW: DASY52, Version 52.8 (8); SEMCAD X Version 14.6.10 (7331)

Area Scan (81x131x1): Interpolated grid: dx=1.200 mm, dy=1.200 mm
Maximum value of SAR (interpolated) = 0.0228 W/kg

Zoom Scan (7x7x7)/Cube 0: Measurement grid: dx=5mm, dy=5mm, dz=5mm
Reference Value = 3.049 V/m; Power Drift = 0.09 dB
Peak SAR (extrapolated) = 0.0300 W/kg
SAR(1 g) = 0.012 W/kg; SAR(10 g) = 0.00709 W/kg
Maximum value of SAR (measured) = 0.0194 W/kg

Date: 2015/11/04
Ambient Temp. : 24.0 degree.C. Liquid Temp.; 23.5 degree.C.

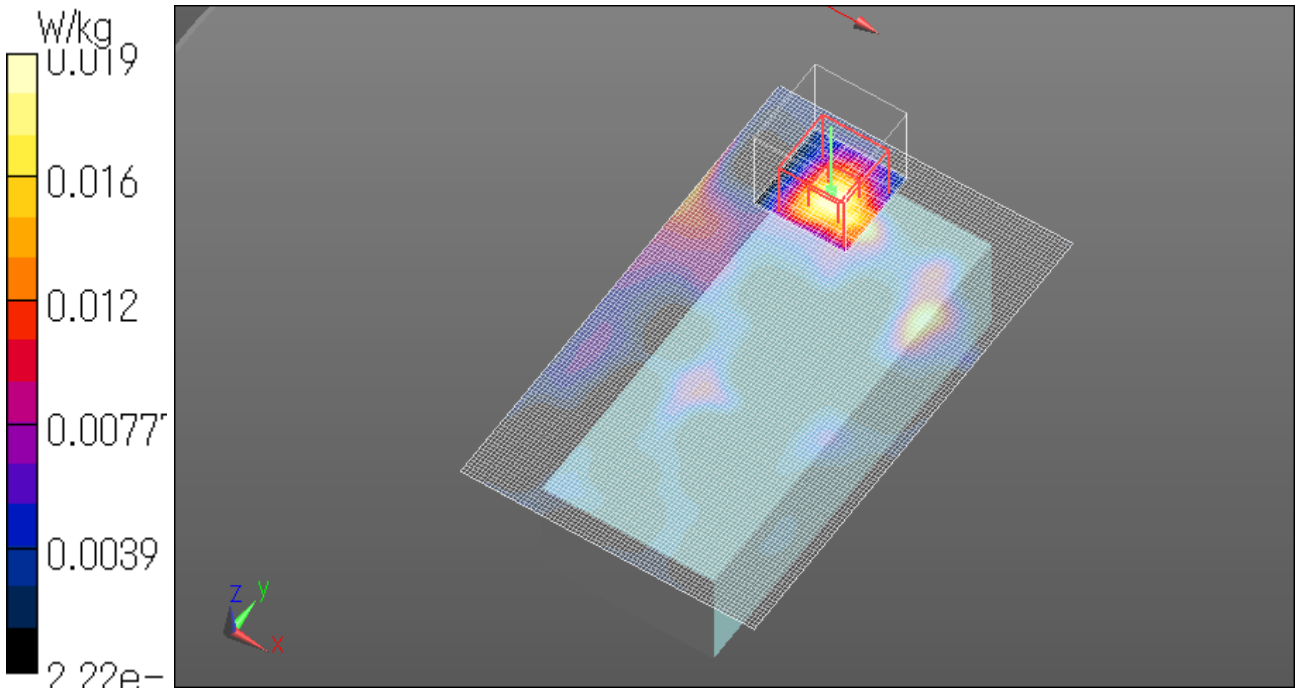

WLAN 2.4G Antenna 1 11b 1Mbps 2462MHz Right 0mm
Communication System: UID 0, WLAN (0); Communication System Band: 11b/g/n; Frequency: 2462 MHz; Duty Cycle: 1:1
Medium parameters used (interpolated): f = 2462 MHz; σ = 1.98 S/m; ε_r = 51.374; ρ = 1000 kg/m^3
Phantom section: Flat Section
Measurement Standard: DASY5 (IEEE/IEC/ANSI C63.19-2007)
DASY5 Configuration
Probe: EX3DV4 - SN3922; ConvF(7.49, 7.49, 7.49); Calibrated: 2015/06/17;
Sensor-Surface: 1.4mm (Mechanical Surface Detection)
Electronics: DAE4 Sn1372; Calibrated: 2015/06/15
Phantom: ELI v5.0 TP1207; Type: QDOVA001BB; Serial: TP:1207
Measurement SW: DASY52, Version 52.8 (8); SEMCAD X Version 14.6.10 (7331)

Area Scan (81x81x1): Interpolated grid: dx=1.200 mm, dy=1.200 mm
Maximum value of SAR (interpolated) = 0.0225 W/kg

Zoom Scan (7x7x7)/Cube 0: Measurement grid: dx=5mm, dy=5mm, dz=5mm
Reference Value = 2.953 V/m; Power Drift = 0.14 dB
Peak SAR (extrapolated) = 0.0260 W/kg
SAR(1 g) = 0.00592 W/kg; SAR(10 g) = 0.00173 W/kg
Maximum value of SAR (measured) = 0.0154 W/kg

Date: 2015/11/04
Ambient Temp. : 24.0 degree.C. Liquid Temp.; 23.5 degree.C.

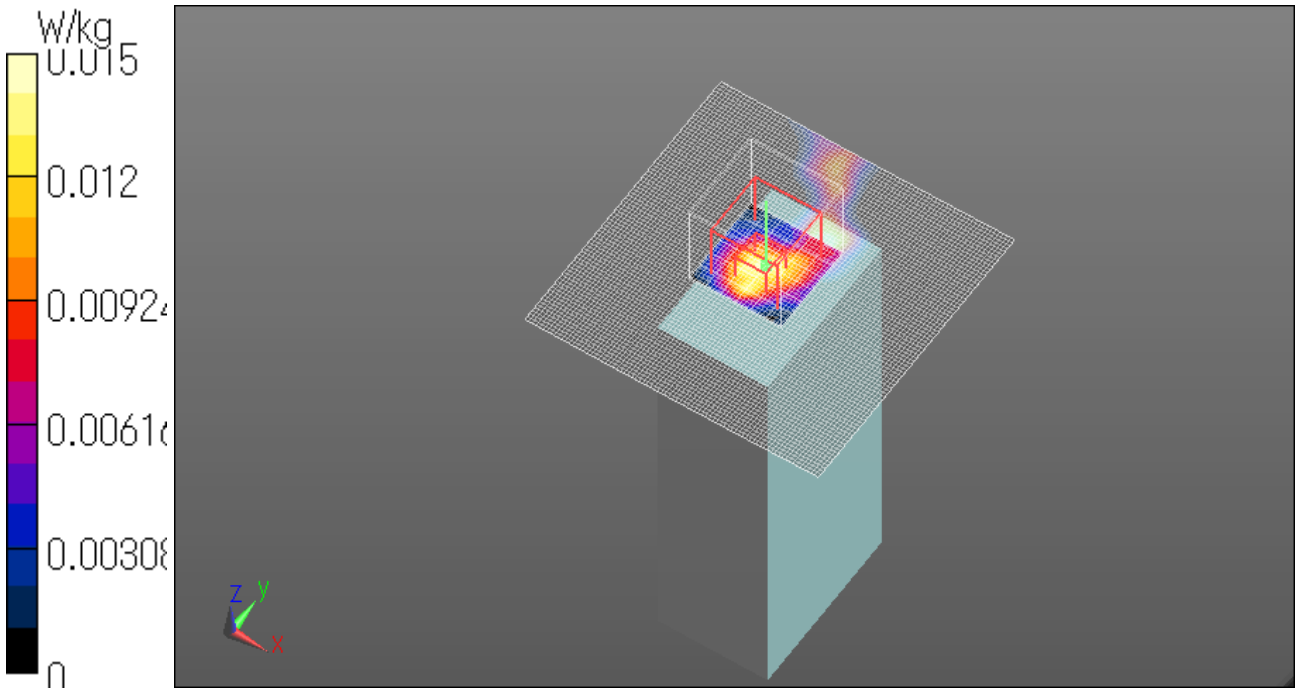

WLAN 2.4G Antenna 1 11b 1Mbps 2437MHz Rear 0mm
Communication System: UID 0, WLAN (0); Communication System Band: 11b/g/n; Frequency: 2437 MHz; Duty Cycle: 1:1
Medium parameters used (interpolated): f = 2437 MHz; σ = 1.935 S/m; ε_r = 51.406; ρ = 1000 kg/m^3
Phantom section: Flat Section
Measurement Standard: DASY5 (IEEE/IEC/ANSI C63.19-2007)
DASY5 Configuration
Probe: EX3DV4 - SN3922; ConvF(7.49, 7.49, 7.49); Calibrated: 2015/06/17;
Sensor-Surface: 1.4mm (Mechanical Surface Detection)
Electronics: DAE4 Sn1372; Calibrated: 2015/06/15
Phantom: ELI v5.0 TP1207; Type: QDOVA001BB; Serial: TP:1207
Measurement SW: DASY52, Version 52.8 (8); SEMCAD X Version 14.6.10 (7331)

Area Scan (51x131x1): Interpolated grid: dx=1.200 mm, dy=1.200 mm
Maximum value of SAR (interpolated) = 2.20 W/kg

Zoom Scan (7x7x7)/Cube 0: Measurement grid: dx=5mm, dy=5mm, dz=5mm
Reference Value = 25.87 V/m; Power Drift = -0.13 dB
Peak SAR (extrapolated) = 2.13 W/kg
SAR(1 g) = 0.697 W/kg; SAR(10 g) = 0.223 W/kg
Maximum value of SAR (measured) = 1.50 W/kg

Date: 2015/11/04
Ambient Temp. : 24.0 degree.C. Liquid Temp.; 23.5 degree.C.

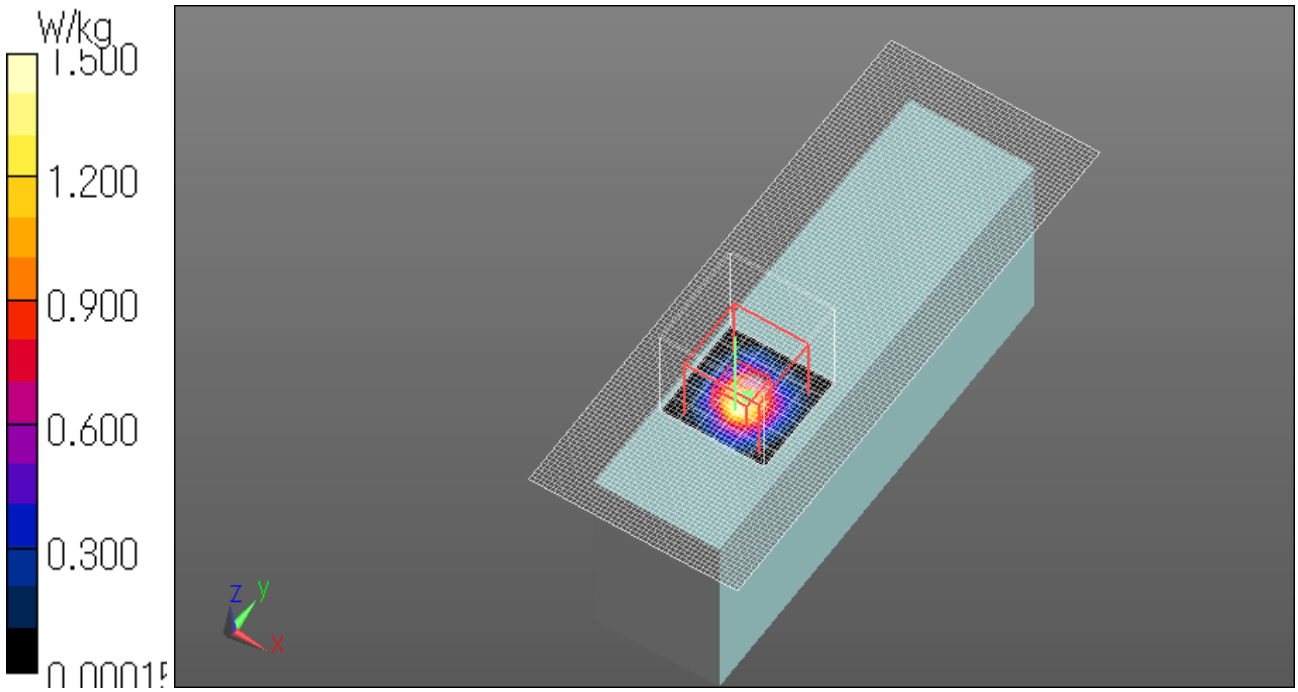

WLAN 2.4G Antenna 2 11b 1Mbps 2437MHz Front 0mm
Communication System: UID 0, WLAN (0); Communication System Band: 11b/g/n; Frequency: 2437 MHz; Duty Cycle: 1:1
Medium parameters used (interpolated): f = 2437 MHz; σ = 1.935 S/m; ε_r = 51.406; ρ = 1000 kg/m^3
Phantom section: Flat Section
Measurement Standard: DASY5 (IEEE/IEC/ANSI C63.19-2007)
DASY5 Configuration
Probe: EX3DV4 - SN3922; ConvF(7.49, 7.49, 7.49); Calibrated: 2015/06/17;
Sensor-Surface: 1.4mm (Mechanical Surface Detection)
Electronics: DAE4 Sn1372; Calibrated: 2015/06/15
Phantom: ELI v5.0 TP1207; Type: QDOVA001BB; Serial: TP:1207
Measurement SW: DASY52, Version 52.8 (8); SEMCAD X Version 14.6.10 (7331)

Area Scan (51x131x1): Interpolated grid: dx=1.200 mm, dy=1.200 mm
Maximum value of SAR (interpolated) = 2.71 W/kg

Zoom Scan (7x7x7)/Cube 0: Measurement grid: dx=5mm, dy=5mm, dz=5mm
Reference Value = 27.39 V/m; Power Drift = -0.15 dB
Peak SAR (extrapolated) = 2.12 W/kg
SAR(1 g) = 0.803 W/kg; SAR(10 g) = 0.310 W/kg
Maximum value of SAR (measured) = 1.43 W/kg

Date: 2015/11/04
Ambient Temp. : 24.0 degree.C. Liquid Temp.; 23.5 degree.C.

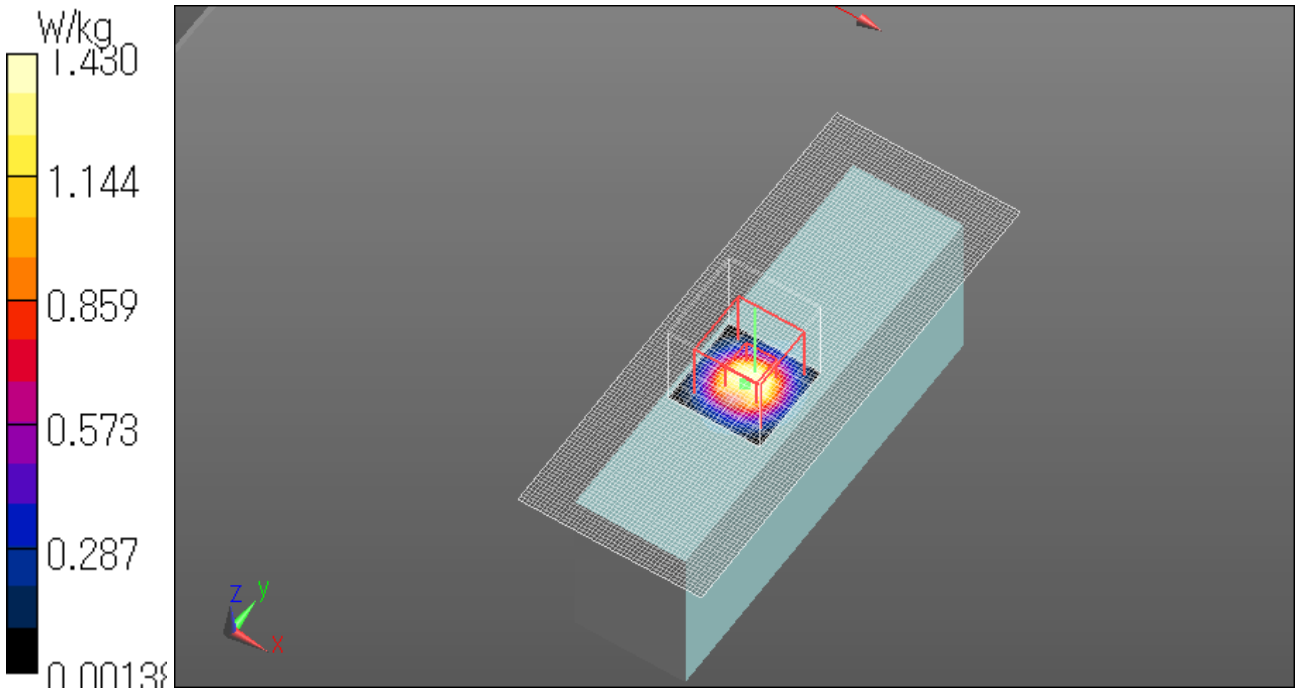

WLAN 2.4G Antenna 2 11b 1Mbps 2437MHz Top 0mm
Communication System: UID 0, WLAN (0); Communication System Band: 11b/g/n; Frequency: 2437 MHz; Duty Cycle: 1:1
Medium parameters used (interpolated): f = 2437 MHz; σ = 1.935 S/m; ε_r = 51.406; ρ = 1000 kg/m^3
Phantom section: Flat Section
Measurement Standard: DASY5 (IEEE/IEC/ANSI C63.19-2007)
DASY5 Configuration
Probe: EX3DV4 - SN3922; ConvF(7.49, 7.49, 7.49); Calibrated: 2015/06/17;
Sensor-Surface: 1.4mm (Mechanical Surface Detection)
Electronics: DAE4 Sn1372; Calibrated: 2015/06/15
Phantom: ELI v5.0 TP1207; Type: QDOVA001BB; Serial: TP:1207
Measurement SW: DASY52, Version 52.8 (8); SEMCAD X Version 14.6.10 (7331)

Area Scan (81x131x1): Interpolated grid: dx=1.200 mm, dy=1.200 mm
Maximum value of SAR (interpolated) = 0.0627 W/kg

Zoom Scan (7x7x7)/Cube 0: Measurement grid: dx=5mm, dy=5mm, dz=5mm
Reference Value = 5.564 V/m; Power Drift = 0.11 dB
Peak SAR (extrapolated) = 0.0690 W/kg
SAR(1 g) = 0.032 W/kg; SAR(10 g) = 0.016 W/kg
Maximum value of SAR (measured) = 0.0552 W/kg

Date: 2015/11/04
Ambient Temp. : 24.0 degree.C. Liquid Temp.; 23.5 degree.C.

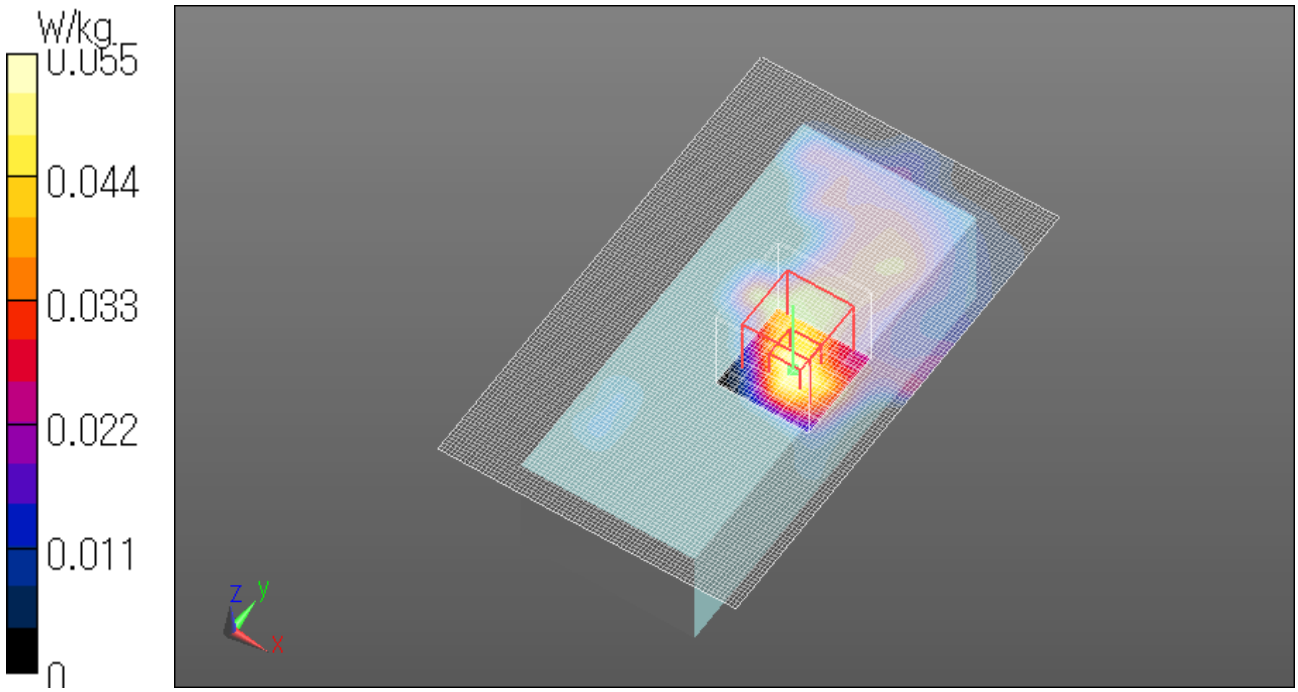

WLAN 2.4G Antenna 2 11b 1Mbps 2437MHz Bottom 0mm
Communication System: UID 0, WLAN (0); Communication System Band: 11b/g/n; Frequency: 2437 MHz; Duty Cycle: 1:1
Medium parameters used (interpolated): f = 2437 MHz; σ = 1.935 S/m; ε_r = 51.406; ρ = 1000 kg/m^3
Phantom section: Flat Section
Measurement Standard: DASY5 (IEEE/IEC/ANSI C63.19-2007)
DASY5 Configuration
Probe: EX3DV4 - SN3922; ConvF(7.49, 7.49, 7.49); Calibrated: 2015/06/17;
Sensor-Surface: 1.4mm (Mechanical Surface Detection)
Electronics: DAE4 Sn1372; Calibrated: 2015/06/15
Phantom: ELI v5.0 TP1207; Type: QDOVA001BB; Serial: TP:1207
Measurement SW: DASY52, Version 52.8 (8); SEMCAD X Version 14.6.10 (7331)

Area Scan (81x131x1): Interpolated grid: dx=1.200 mm, dy=1.200 mm
Maximum value of SAR (interpolated) = 0.0696 W/kg

Zoom Scan (8x8x7)/Cube 0: Measurement grid: dx=5mm, dy=5mm, dz=5mm
Reference Value = 4.204 V/m; Power Drift = 0.01 dB
Peak SAR (extrapolated) = 0.0450 W/kg
SAR(1 g) = 0.019 W/kg; SAR(10 g) = 0.00796 W/kg
Maximum value of SAR (measured) = 0.0323 W/kg

Date: 2015/11/04
Ambient Temp. : 24.0 degree.C. Liquid Temp.; 23.5 degree.C.

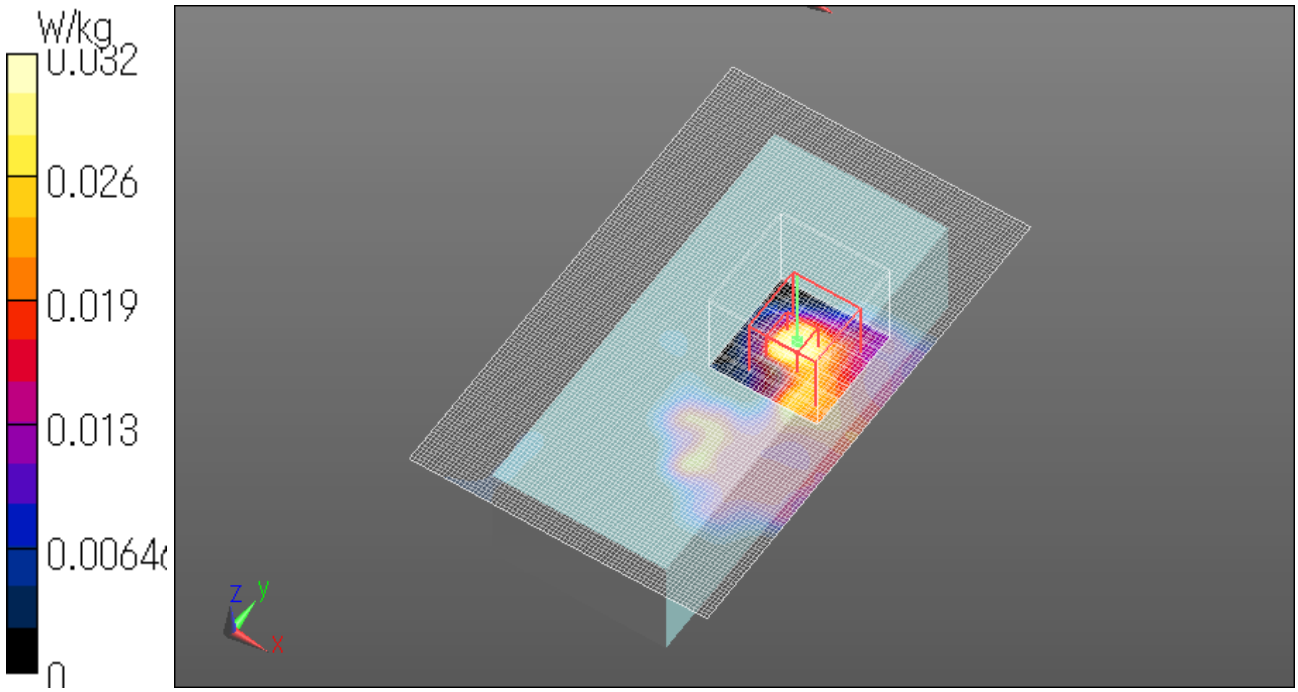

WLAN 2.4G Antenna 2 11b 1Mbps 2437MHz Left 0mm
Communication System: UID 0, WLAN (0); Communication System Band: 11b/g/n; Frequency: 2437 MHz; Duty Cycle: 1:1
Medium parameters used (interpolated): f = 2437 MHz; σ = 1.935 S/m; ε_r = 51.406; ρ = 1000 kg/m^3
Phantom section: Flat Section
Measurement Standard: DASY5 (IEEE/IEC/ANSI C63.19-2007)
DASY5 Configuration
Probe: EX3DV4 - SN3922; ConvF(7.49, 7.49, 7.49); Calibrated: 2015/06/17;
Sensor-Surface: 1.4mm (Mechanical Surface Detection)
Electronics: DAE4 Sn1372; Calibrated: 2015/06/15
Phantom: ELI v5.0 TP1207; Type: QDOVA001BB; Serial: TP:1207
Measurement SW: DASY52, Version 52.8 (8); SEMCAD X Version 14.6.10 (7331)

Area Scan (81x81x1): Interpolated grid: dx=1.200 mm, dy=1.200 mm
Maximum value of SAR (interpolated) = 0.0204 W/kg

Zoom Scan (7x7x7)/Cube 0: Measurement grid: dx=5mm, dy=5mm, dz=5mm
Reference Value = 3.336 V/m; Power Drift = 0.07 dB
Peak SAR (extrapolated) = 0.0240 W/kg
SAR(1 g) = 0.013 W/kg; SAR(10 g) = 0.00709 W/kg
Maximum value of SAR (measured) = 0.0200 W/kg

Date: 2015/11/04
Ambient Temp. : 24.0 degree.C. Liquid Temp.; 23.5 degree.C.

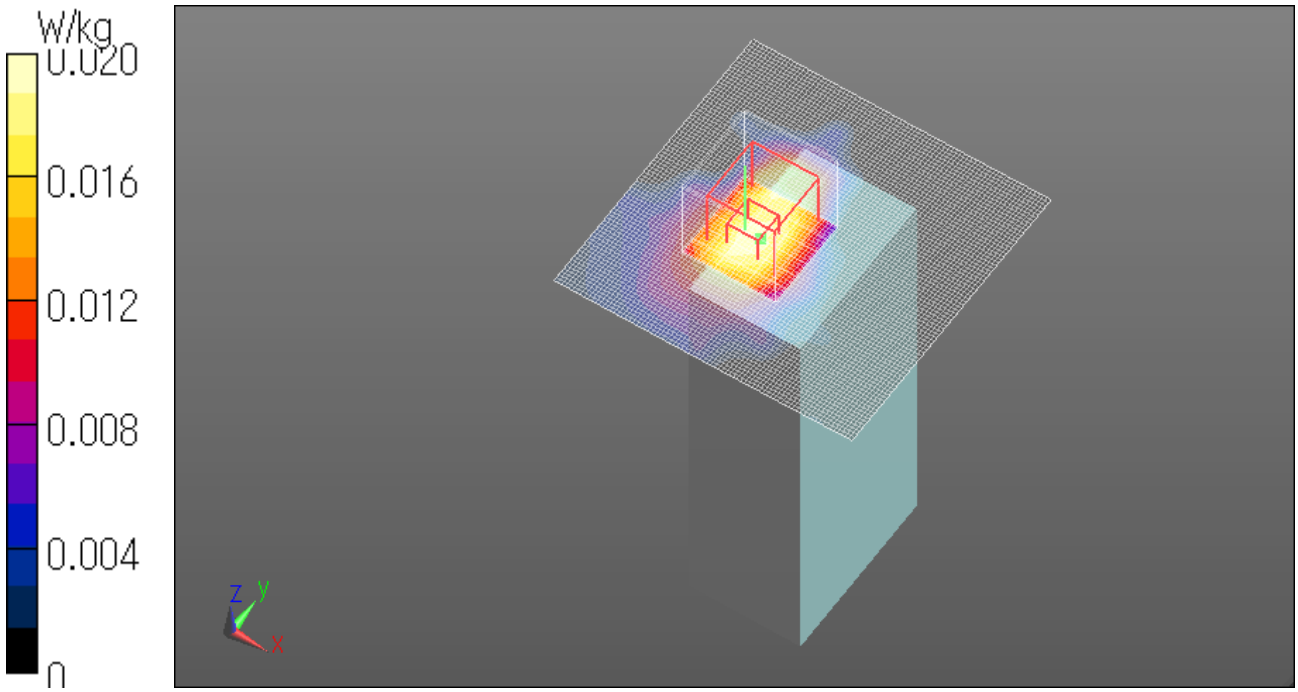

WLAN 2.4G Antenna 2 11b 1Mbps 2462MHz Front 0mm
Communication System: UID 0, WLAN (0); Communication System Band: 11b/g/n; Frequency: 2462 MHz; Duty Cycle: 1:1
Medium parameters used (interpolated): f = 2462 MHz; σ = 1.98 S/m; ε_r = 51.374; ρ = 1000 kg/m^3
Phantom section: Flat Section
Measurement Standard: DASY5 (IEEE/IEC/ANSI C63.19-2007)
DASY5 Configuration
Probe: EX3DV4 - SN3922; ConvF(7.49, 7.49, 7.49); Calibrated: 2015/06/17;
Sensor-Surface: 1.4mm (Mechanical Surface Detection)
Electronics: DAE4 Sn1372; Calibrated: 2015/06/15
Phantom: ELI v5.0 TP1207; Type: QDOVA001BB; Serial: TP:1207
Measurement SW: DASY52, Version 52.8 (8); SEMCAD X Version 14.6.10 (7331)

Area Scan (51x131x1): Interpolated grid: dx=1.200 mm, dy=1.200 mm
Maximum value of SAR (interpolated) = 2.37 W/kg

Zoom Scan (7x7x7)/Cube 0: Measurement grid: dx=5mm, dy=5mm, dz=5mm
Reference Value = 28.12 V/m; Power Drift = -0.08 dB
Peak SAR (extrapolated) = 2.26 W/kg
SAR(1 g) = 0.851 W/kg; SAR(10 g) = 0.331 W/kg
Maximum value of SAR (measured) = 1.54 W/kg

Date: 2015/11/04
Ambient Temp. : 24.0 degree.C. Liquid Temp.; 23.5 degree.C.

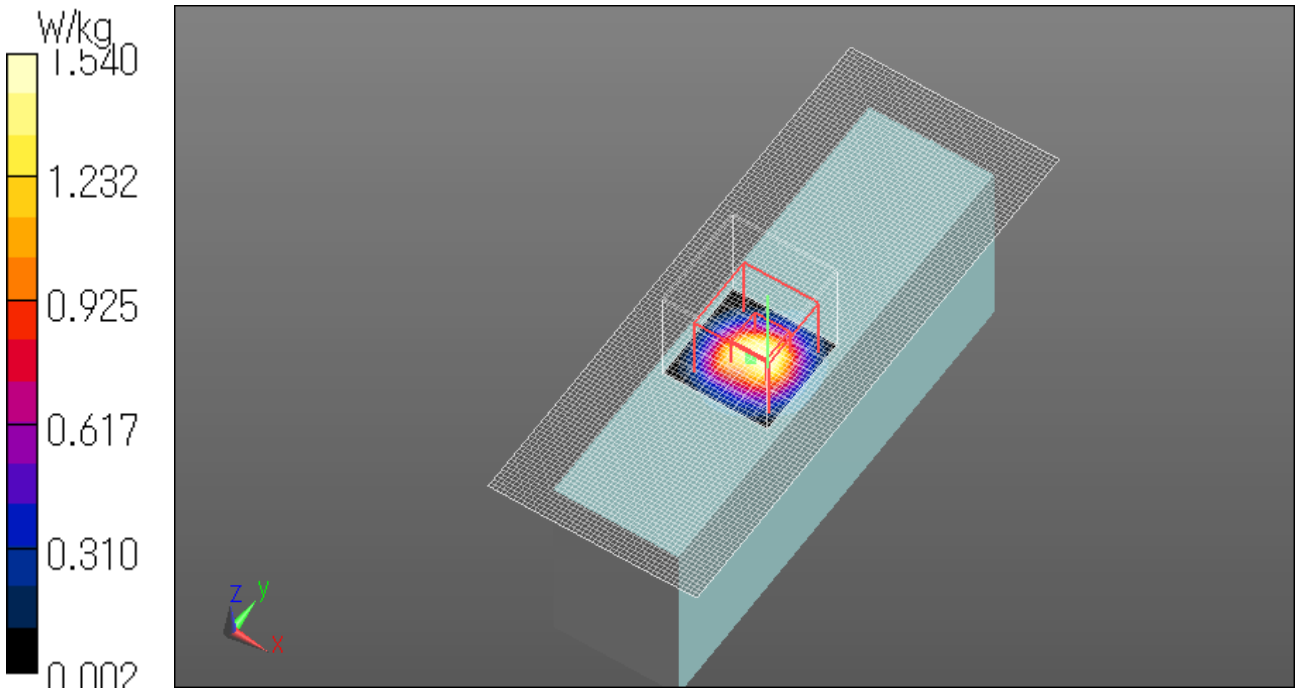

WLAN 2.4G Antenna 2 11b 1Mbps 2462MHz Front 0mm Repeat
Communication System: UID 0, WLAN (0); Communication System Band: 11b/g/n; Frequency: 2462 MHz; Duty Cycle: 1:1
Medium parameters used (interpolated): f = 2462 MHz; σ = 1.98 S/m; ε_r = 51.374; ρ = 1000 kg/m^3
Phantom section: Flat Section
Measurement Standard: DASY5 (IEEE/IEC/ANSI C63.19-2007)
DASY5 Configuration
Probe: EX3DV4 - SN3922; ConvF(7.49, 7.49, 7.49); Calibrated: 2015/06/17;
Sensor-Surface: 1.4mm (Mechanical Surface Detection)
Electronics: DAE4 Sn1372; Calibrated: 2015/06/15
Phantom: ELI v5.0 TP1207; Type: QDOVA001BB; Serial: TP:1207
Measurement SW: DASY52, Version 52.8 (8); SEMCAD X Version 14.6.10 (7331)

Area Scan (51x131x1): Interpolated grid: dx=1.200 mm, dy=1.200 mm
Maximum value of SAR (interpolated) = 2.38 W/kg

Zoom Scan (7x7x7)/Cube 0: Measurement grid: dx=5mm, dy=5mm, dz=5mm
Reference Value = 27.75 V/m; Power Drift = -0.03 dB
Peak SAR (extrapolated) = 2.22 W/kg
SAR(1 g) = 0.844 W/kg; SAR(10 g) = 0.328 W/kg
Maximum value of SAR (measured) = 1.53 W/kg

Date: 2015/11/04
Ambient Temp. : 24.0 degree.C. Liquid Temp.; 23.5 degree.C.

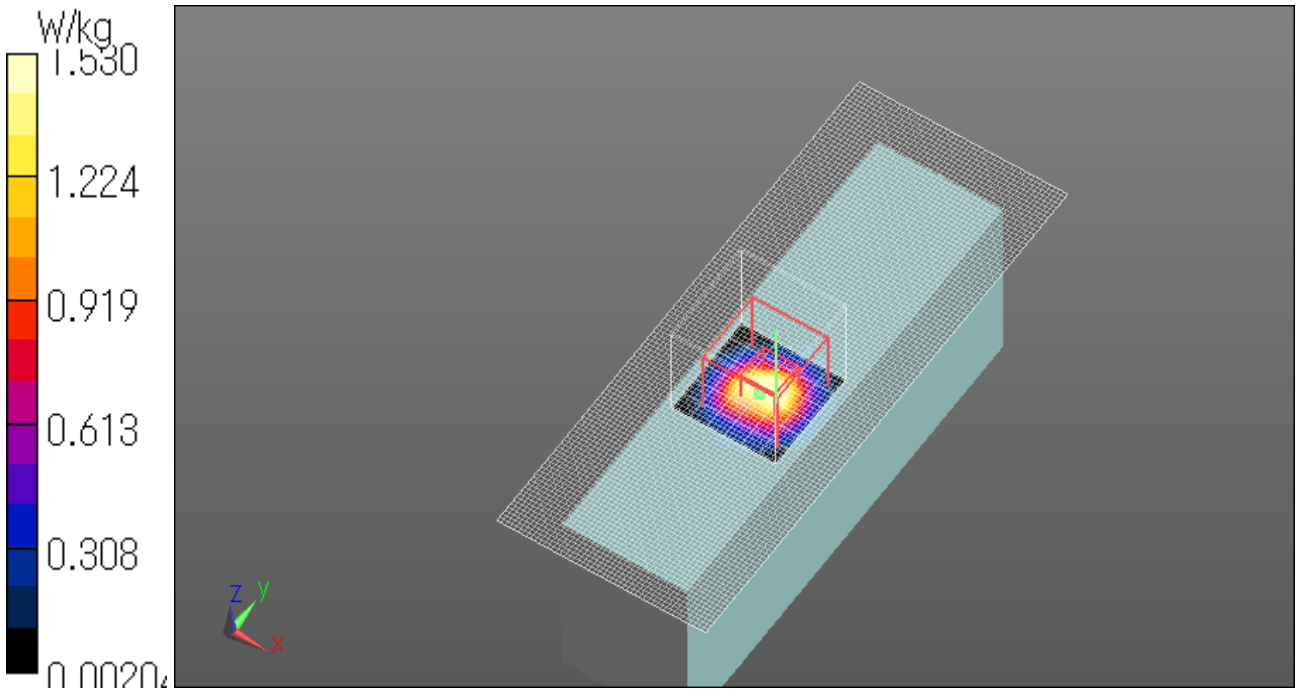

3. Measurement data(5.2GHz)

WLAN W5.2 Antenna 1 11ac40 MCS0 5190MHz Front 0mm
Communication System: UID 0, WLAN (0); Communication System Band: 11n40/ac40; Frequency: 5190 MHz; Duty Cycle: 1:1
Medium parameters used: f = 5190 MHz; σ = 5.243 S/m; ε_r = 47.763; ρ = 1000 kg/m^3
Phantom section: Flat Section
Measurement Standard: DASY5 (IEEE/IEC/ANSI C63.19-2007)
DASY5 Configuration
Probe: EX3DV4 - SN3922; ConvF(4.46, 4.46, 4.46); Calibrated: 2015/06/17;
Sensor-Surface: 1.4mm (Mechanical Surface Detection)
Electronics: DAE4 Sn1372; Calibrated: 2015/06/15
Phantom: ELI v5.0 TP1207 (30deg probe tilt); Type: QDOVA002AA; Serial: TP:1207
Measurement SW: DASY52, Version 52.8 (8); SEMCAD X Version 14.6.10 (7331)

Area Scan (61x161x1): Interpolated grid: dx=1.000 mm, dy=1.000 mm
Maximum value of SAR (interpolated) = 0 W/kg
Date: 2015/11/30
Ambient Temp. : 24.0 degree.C. Liquid Temp.; 23.5 degree.C.

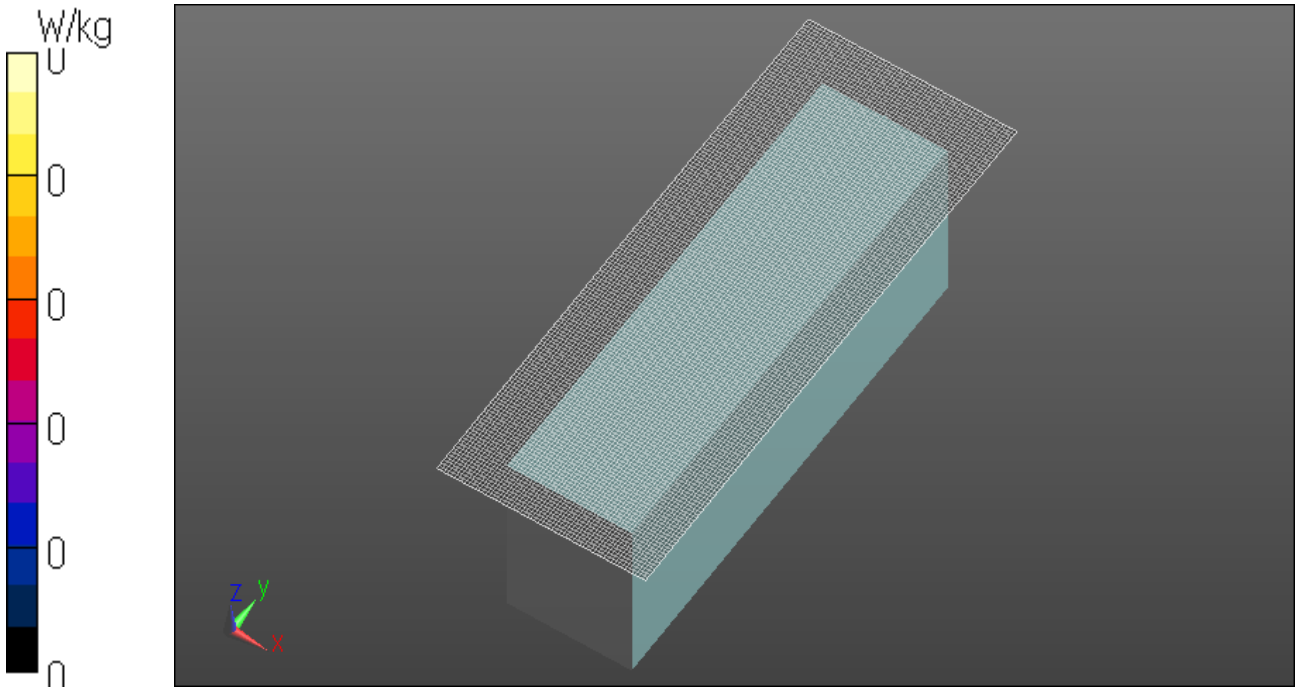

WLAN W5.2 Antenna 1 11ac40 MCS0 5190MHz Rear 0mm
Communication System: UID 0, WLAN (0); Communication System Band: 11n40/ac40; Frequency: 5190 MHz; Duty Cycle: 1:1
Medium parameters used: f = 5190 MHz; σ = 5.243 S/m; ε_r = 47.763; ρ = 1000 kg/m^3
Phantom section: Flat Section
Measurement Standard: DASY5 (IEEE/IEC/ANSI C63.19-2007)
DASY5 Configuration
Probe: EX3DV4 - SN3922; ConvF(4.46, 4.46, 4.46); Calibrated: 2015/06/17;
Sensor-Surface: 1.4mm (Mechanical Surface Detection)
Electronics: DAE4 Sn1372; Calibrated: 2015/06/15
Phantom: ELI v5.0 TP1207 (30deg probe tilt); Type: QDOVA002AA; Serial: TP:1207
Measurement SW: DASY52, Version 52.8 (8); SEMCAD X Version 14.6.10 (7331)

Area Scan (61x161x1): Interpolated grid: dx=1.000 mm, dy=1.000 mm
Maximum value of SAR (interpolated) = 1.36 W/kg

Zoom Scan (8x8x7)/Cube 0: Measurement grid: dx=4mm, dy=4mm, dz=1.4mm
Reference Value = 24.00 V/m; Power Drift = -0.11 dB
Peak SAR (extrapolated) = 4.26 W/kg
SAR(1 g) = 0.801 W/kg
Maximum value of SAR (measured) = 2.17 W/kg
Date: 2015/11/30
Ambient Temp. : 24.0 degree.C. Liquid Temp.; 23.5 degree.C.

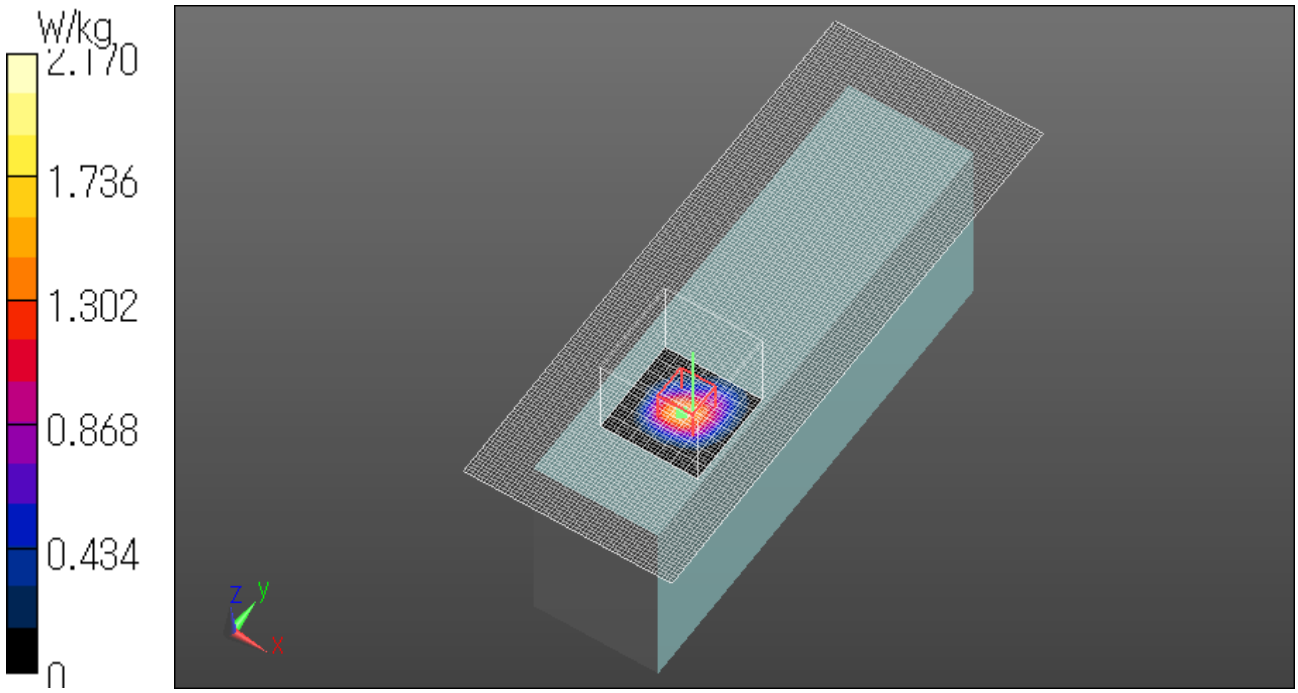

WLAN W5.2 Antenna 1 11ac40 MCS0 5190MHz Top 0mm
Communication System: UID 0, WLAN (0); Communication System Band: 11n40/ac40; Frequency: 5190 MHz; Duty Cycle: 1:1
Medium parameters used: f = 5190 MHz; σ = 5.243 S/m; ε_r = 47.763; ρ = 1000 kg/m^3
Phantom section: Flat Section
Measurement Standard: DASY5 (IEEE/IEC/ANSI C63.19-2007)
DASY5 Configuration
Probe: EX3DV4 - SN3922; ConvF(4.46, 4.46, 4.46); Calibrated: 2015/06/17;
Sensor-Surface: 1.4mm (Mechanical Surface Detection)
Electronics: DAE4 Sn1372; Calibrated: 2015/06/15
Phantom: ELI v5.0 TP1207 (30deg probe tilt); Type: QDOVA002AA; Serial: TP:1207
Measurement SW: DASY52, Version 52.8 (8); SEMCAD X Version 14.6.10 (7331)

Area Scan (81x161x1): Interpolated grid: dx=1.000 mm, dy=1.000 mm
Maximum value of SAR (interpolated) = 0.166 W/kg

Zoom Scan (8x8x7)/Cube 0: Measurement grid: dx=4mm, dy=4mm, dz=1.4mm
Reference Value = 5.494 V/m; Power Drift = -0.11 dB
Peak SAR (extrapolated) = 0.215 W/kg
SAR(1 g) = 0.047 W/kg
Maximum value of SAR (measured) = 0.140 W/kg
Date: 2015/11/30
Ambient Temp. : 24.0 degree.C. Liquid Temp.; 23.5 degree.C.

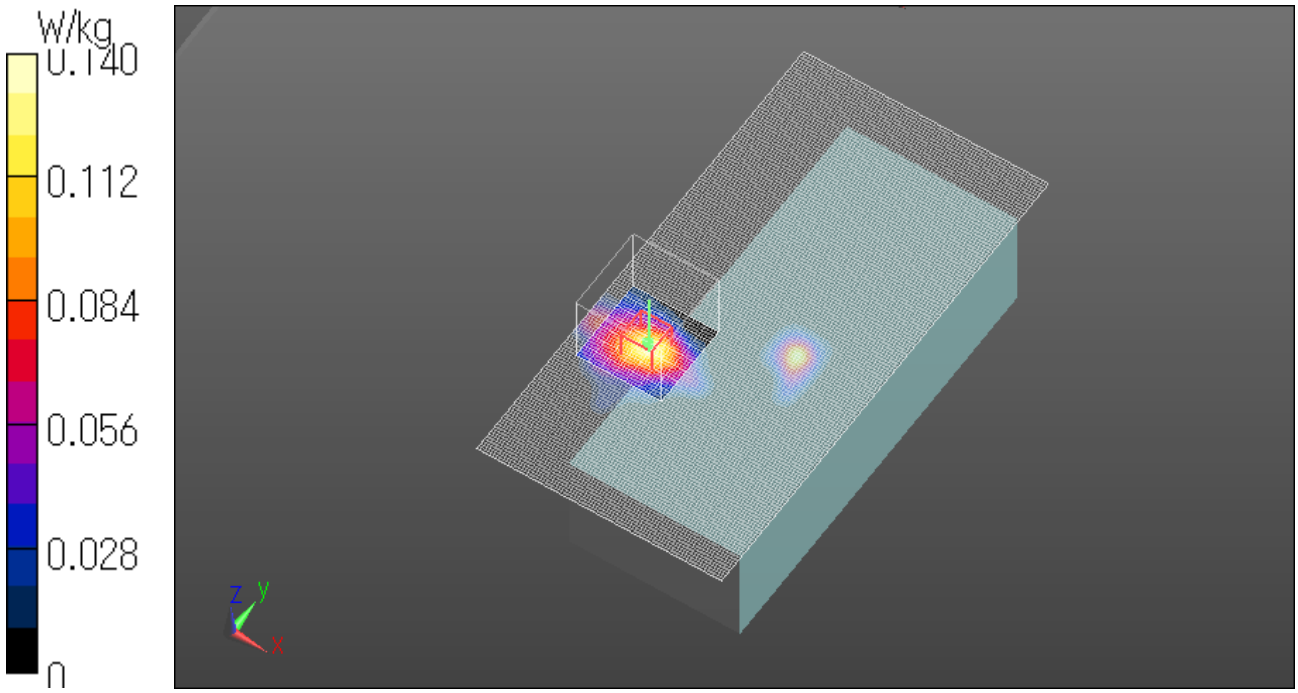

WLAN W5.2 Antenna 1 11ac40 MCS0 5190MHz Bottom 0mm
Communication System: UID 0, WLAN (0); Communication System Band: 11n40/ac40; Frequency: 5190 MHz; Duty Cycle: 1:1
Medium parameters used: f = 5190 MHz; σ = 5.243 S/m; ε_r = 47.763; ρ = 1000 kg/m^3
Phantom section: Flat Section
Measurement Standard: DASY5 (IEEE/IEC/ANSI C63.19-2007)
DASY5 Configuration
Probe: EX3DV4 - SN3922; ConvF(4.46, 4.46, 4.46); Calibrated: 2015/06/17;
Sensor-Surface: 1.4mm (Mechanical Surface Detection)
Electronics: DAE4 Sn1372; Calibrated: 2015/06/15
Phantom: ELI v5.0 TP1207 (30deg probe tilt); Type: QDOVA002AA; Serial: TP:1207
Measurement SW: DASY52, Version 52.8 (8); SEMCAD X Version 14.6.10 (7331)

Area Scan (81x161x1): Interpolated grid: dx=1.000 mm, dy=1.000 mm
Maximum value of SAR (interpolated) = 0 W/kg
Date: 2015/11/30
Ambient Temp. : 24.0 degree.C. Liquid Temp.; 23.5 degree.C.

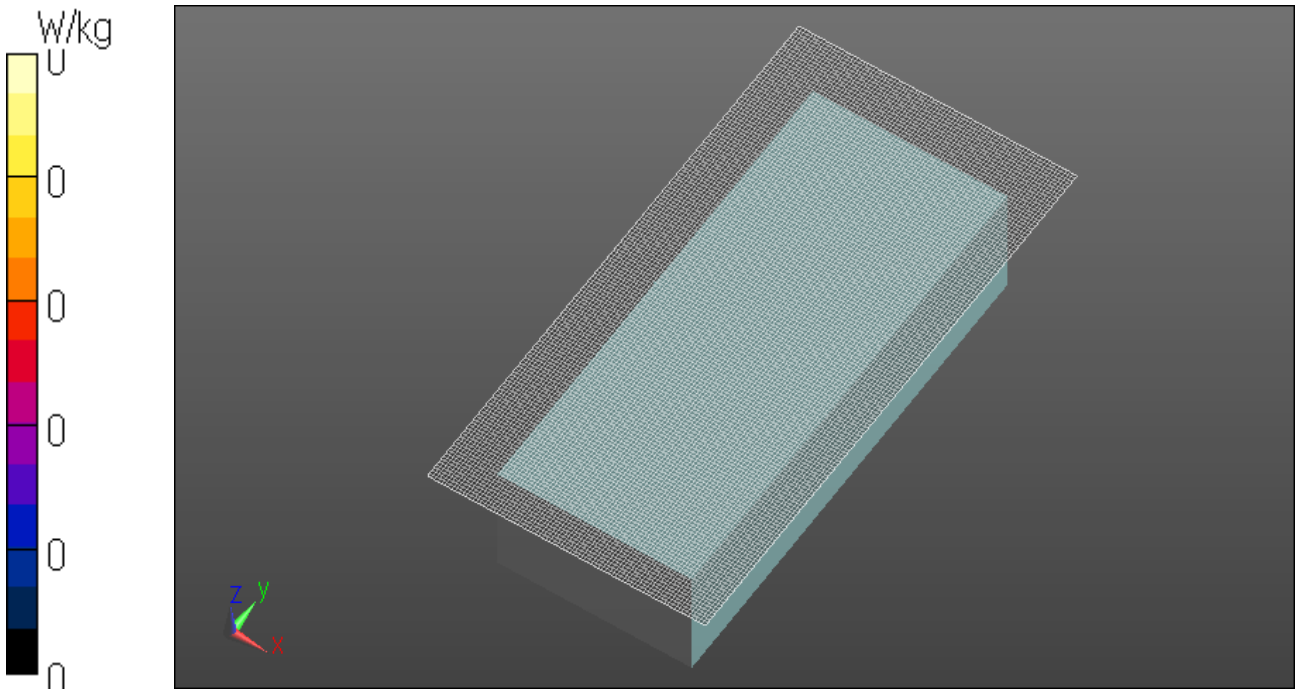

WLAN W5.2 Antenna 1 11ac40 MCS0 5190MHz Right 0mm
Communication System: UID 0, WLAN (0); Communication System Band: 11n40/ac40; Frequency: 5190 MHz; Duty Cycle: 1:1
Medium parameters used: f = 5190 MHz; σ = 5.243 S/m; ε_r = 47.763; ρ = 1000 kg/m^3
Phantom section: Flat Section
Measurement Standard: DASY5 (IEEE/IEC/ANSI C63.19-2007)
DASY5 Configuration
Probe: EX3DV4 - SN3922; ConvF(4.46, 4.46, 4.46); Calibrated: 2015/06/17;
Sensor-Surface: 1.4mm (Mechanical Surface Detection)
Electronics: DAE4 Sn1372; Calibrated: 2015/06/15
Phantom: ELI v5.0 TP1207 (30deg probe tilt); Type: QDOVA002AA; Serial: TP:1207
Measurement SW: DASY52, Version 52.8 (8); SEMCAD X Version 14.6.10 (7331)

Area Scan (81x101x1): Interpolated grid: dx=1.000 mm, dy=1.000 mm
Maximum value of SAR (interpolated) = 0.00404 W/kg

Zoom Scan (9x10x7)/Cube 0: Measurement grid: dx=4mm, dy=4mm, dz=1.4mm
Reference Value = 0.2830 V/m; Power Drift = -0.10 dB
Peak SAR (extrapolated) = 0.270 W/kg
SAR(1 g) = 0.00934 W/kg
Maximum value of SAR (measured) = 0.0459 W/kg
Date: 2015/11/30
Ambient Temp. : 24.0 degree.C. Liquid Temp.; 23.5 degree.C.

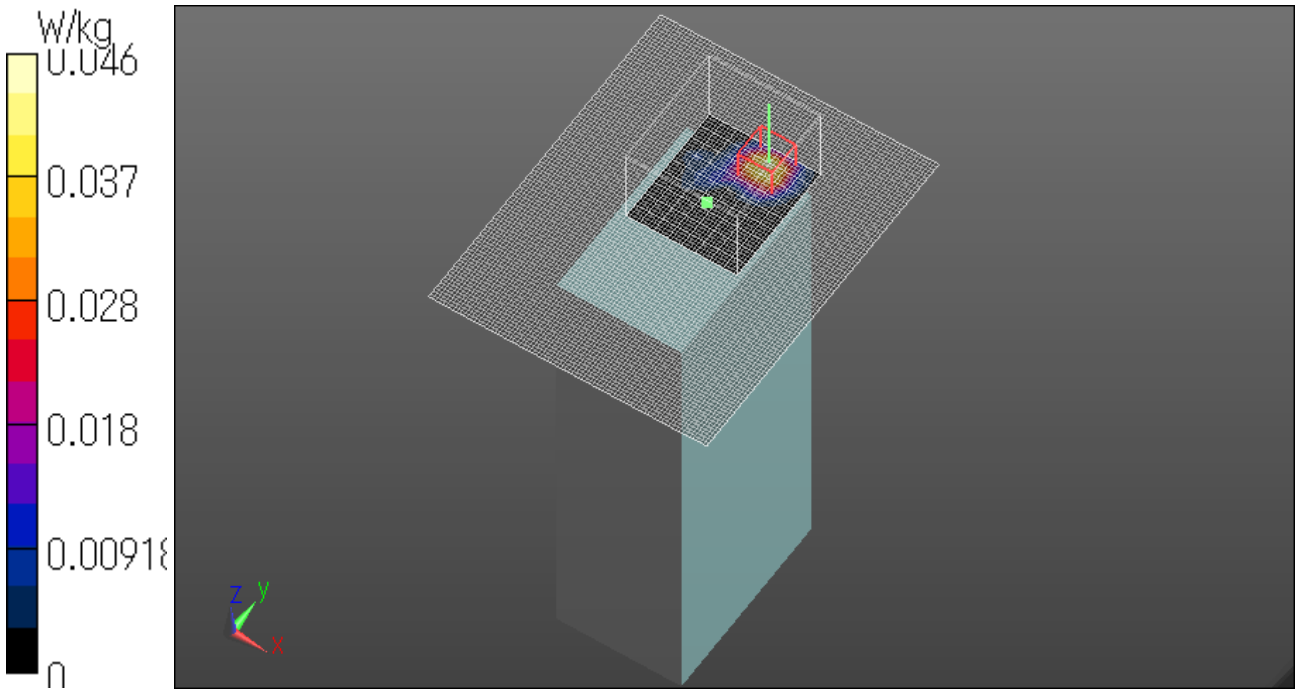

WLAN W5.2 Antenna 1 11ac40 MCS0 5230MHz Rear 0mm
Communication System: UID 0, WLAN (0); Communication System Band: 11n40/ac40; Frequency: 5230 MHz; Duty Cycle: 1:1
Medium parameters used: f = 5230 MHz; σ = 5.341 S/m; ε_r = 47.636; ρ = 1000 kg/m^3
Phantom section: Flat Section
Measurement Standard: DASY5 (IEEE/IEC/ANSI C63.19-2007)
DASY5 Configuration
Probe: EX3DV4 - SN3922; ConvF(4.46, 4.46, 4.46); Calibrated: 2015/06/17;
Sensor-Surface: 1.4mm (Mechanical Surface Detection)
Electronics: DAE4 Sn1372; Calibrated: 2015/06/15
Phantom: ELI v5.0 TP1207 (30deg probe tilt); Type: QDOVA002AA; Serial: TP:1207
Measurement SW: DASY52, Version 52.8 (8); SEMCAD X Version 14.6.10 (7331)

Area Scan (61x161x1): Interpolated grid: dx=1.000 mm, dy=1.000 mm
Maximum value of SAR (interpolated) = 3.50 W/kg

Zoom Scan (8x8x7)/Cube 0: Measurement grid: dx=4mm, dy=4mm, dz=1.4mm
Reference Value = 24.71 V/m; Power Drift = -0.14 dB
Peak SAR (extrapolated) = 4.97 W/kg
SAR(1 g) = 0.915 W/kg
Maximum value of SAR (measured) = 2.78 W/kg
Date: 2015/11/30
Ambient Temp. : 24.0 degree.C. Liquid Temp.; 23.5 degree.C.

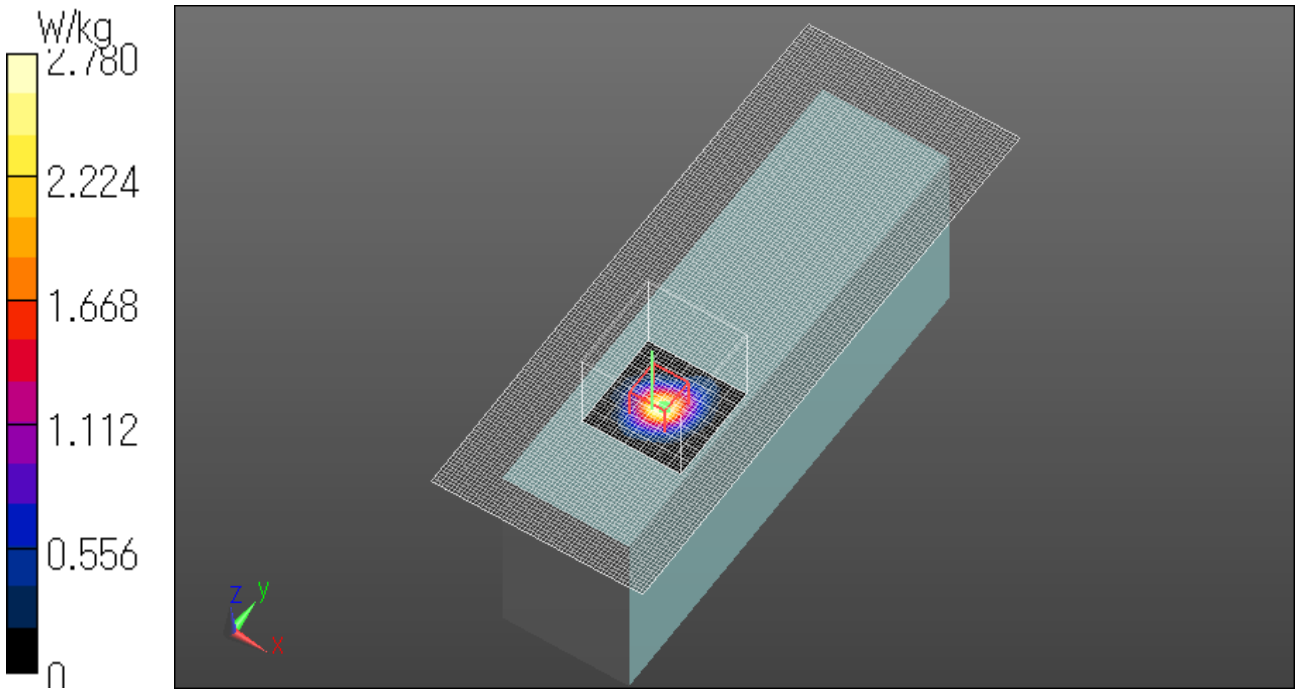

WLAN W5.2 Antenna 1 11ac40 MCS0 5230MHz Rear 0mm Repeat
Communication System: UID 0, WLAN (0); Communication System Band: 11n40/ac40; Frequency: 5230 MHz; Duty Cycle: 1:1
Medium parameters used: f = 5230 MHz; σ = 5.341 S/m; ε_r = 47.636; ρ = 1000 kg/m^3
Phantom section: Flat Section
Measurement Standard: DASY5 (IEEE/IEC/ANSI C63.19-2007)
DASY5 Configuration
Probe: EX3DV4 - SN3922; ConvF(4.46, 4.46, 4.46); Calibrated: 2015/06/17;
Sensor-Surface: 1.4mm (Mechanical Surface Detection)
Electronics: DAE4 Sn1372; Calibrated: 2015/06/15
Phantom: ELI v5.0 TP1207 (30deg probe tilt); Type: QDOVA002AA; Serial: TP:1207
Measurement SW: DASY52, Version 52.8 (8); SEMCAD X Version 14.6.10 (7331)

Area Scan (61x161x1): Interpolated grid: dx=1.000 mm, dy=1.000 mm
Maximum value of SAR (interpolated) = 3.28 W/kg

Zoom Scan (8x8x7)/Cube 0: Measurement grid: dx=4mm, dy=4mm, dz=1.4mm
Reference Value = 24.70 V/m; Power Drift = -0.11 dB
Peak SAR (extrapolated) = 4.87 W/kg
SAR(1 g) = 0.902 W/kg
Maximum value of SAR (measured) = 2.68 W/kg
Date: 2015/11/30
Ambient Temp. : 24.0 degree.C. Liquid Temp.; 23.5 degree.C.

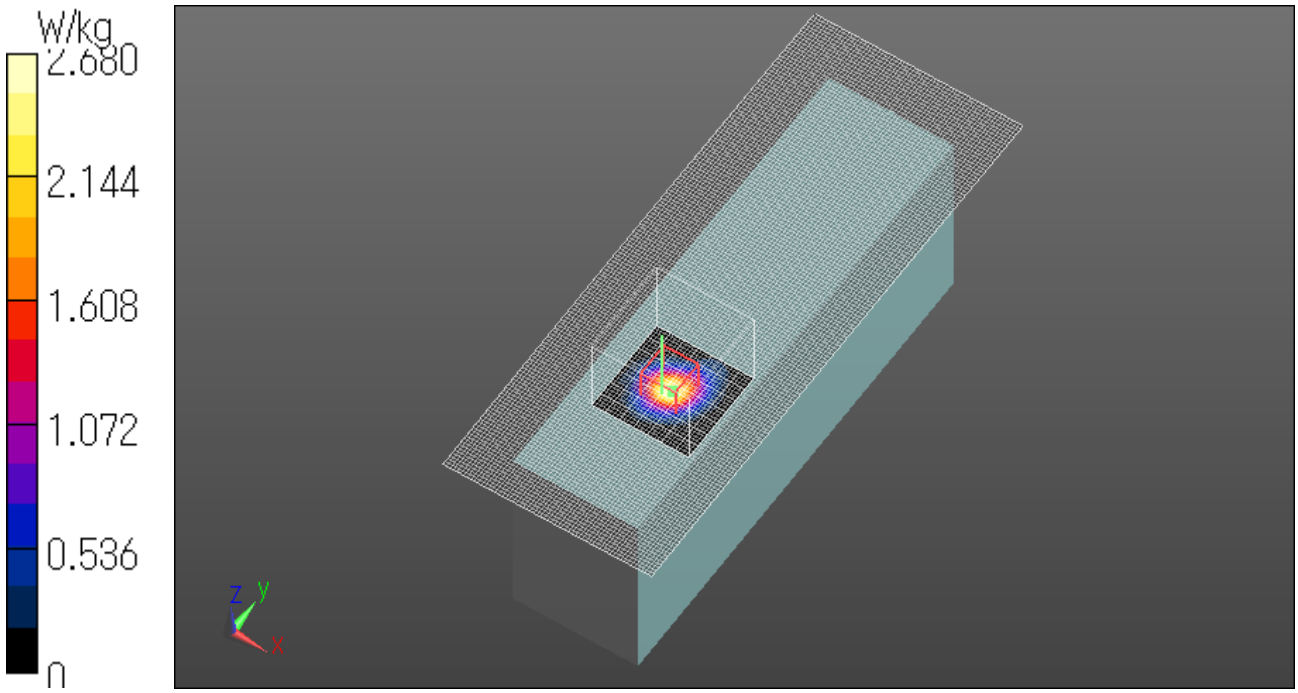

WLAN W5.2 Antenna 2 11ac40 MCS0 5230MHz Front 0mm
Communication System: UID 0, WLAN (0); Communication System Band: 11n40/ac40; Frequency: 5230 MHz; Duty Cycle: 1:1
Medium parameters used: f = 5230 MHz; σ = 5.422 S/m; ε_r = 47.284; ρ = 1000 kg/m^3
Phantom section: Flat Section
Measurement Standard: DASY5 (IEEE/IEC/ANSI C63.19-2007)
DASY5 Configuration
Probe: EX3DV4 - SN3922; ConvF(4.46, 4.46, 4.46); Calibrated: 2015/06/17;
Sensor-Surface: 1.4mm (Mechanical Surface Detection)
Electronics: DAE4 Sn1372; Calibrated: 2015/06/15
Phantom: ELI v5.0 TP1207 (30deg probe tilt); Type: QDOVA002AA; Serial: TP:1207
Measurement SW: DASY52, Version 52.8 (8); SEMCAD X Version 14.6.10 (7331)

Area Scan (61x161x1): Interpolated grid: dx=1.000 mm, dy=1.000 mm
Maximum value of SAR (interpolated) = 3.49 W/kg

Zoom Scan (8x8x7)/Cube 0: Measurement grid: dx=4mm, dy=4mm, dz=1.4mm
Reference Value = 27.46 V/m; Power Drift = -0.02 dB
Peak SAR (extrapolated) = 5.97 W/kg
SAR(1 g) = 1.17 W/kg
Maximum value of SAR (measured) = 3.11 W/kg
Date: 2015/11/26
Ambient Temp. : 24.0 degree.C. Liquid Temp.; 23.5 degree.C.

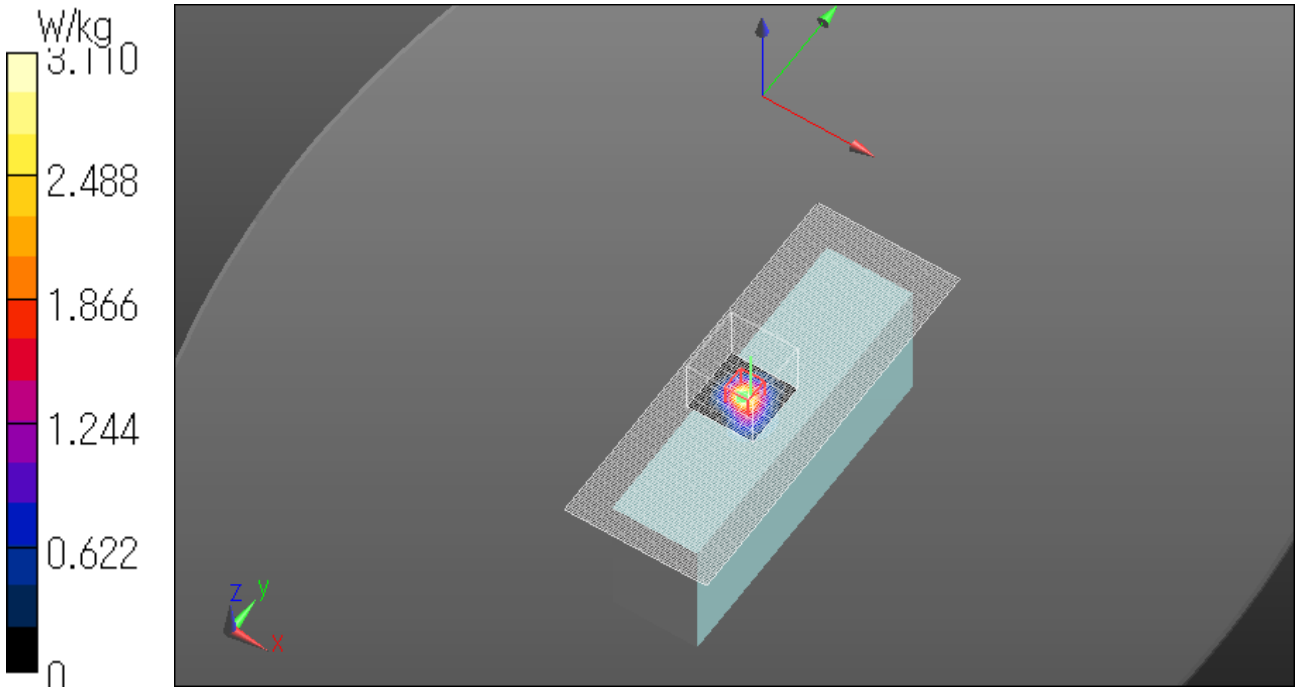

WLAN W5.2 Antenna 2 11ac40 MCS0 5230MHz Top 0mm
Communication System: UID 0, WLAN (0); Communication System Band: 11n40/ac40; Frequency: 5230 MHz; Duty Cycle: 1:1
Medium parameters used: f = 5230 MHz; σ = 5.422 S/m; ε_r = 47.284; ρ = 1000 kg/m^3
Phantom section: Flat Section
Measurement Standard: DASY5 (IEEE/IEC/ANSI C63.19-2007)
DASY5 Configuration
Probe: EX3DV4 - SN3922; ConvF(4.46, 4.46, 4.46); Calibrated: 2015/06/17;
Sensor-Surface: 1.4mm (Mechanical Surface Detection)
Electronics: DAE4 Sn1372; Calibrated: 2015/06/15
Phantom: ELI v5.0 TP1207 (30deg probe tilt); Type: QDOVA002AA; Serial: TP:1207
Measurement SW: DASY52, Version 52.8 (8); SEMCAD X Version 14.6.10 (7331)

Area Scan 2 (101x161x1): Interpolated grid: dx=1.000 mm, dy=1.000 mm
Maximum value of SAR (interpolated) = 0.646 W/kg

Zoom Scan (8x8x7)/Cube 0: Measurement grid: dx=4mm, dy=4mm, dz=1.4mm
Reference Value = 12.27 V/m; Power Drift = -0.06 dB
Peak SAR (extrapolated) = 1.08 W/kg
SAR(1 g) = 0.286 W/kg
Maximum value of SAR (measured) = 0.655 W/kg
Date: 2015/11/26
Ambient Temp. : 24.0 degree.C. Liquid Temp.; 23.5 degree.C.

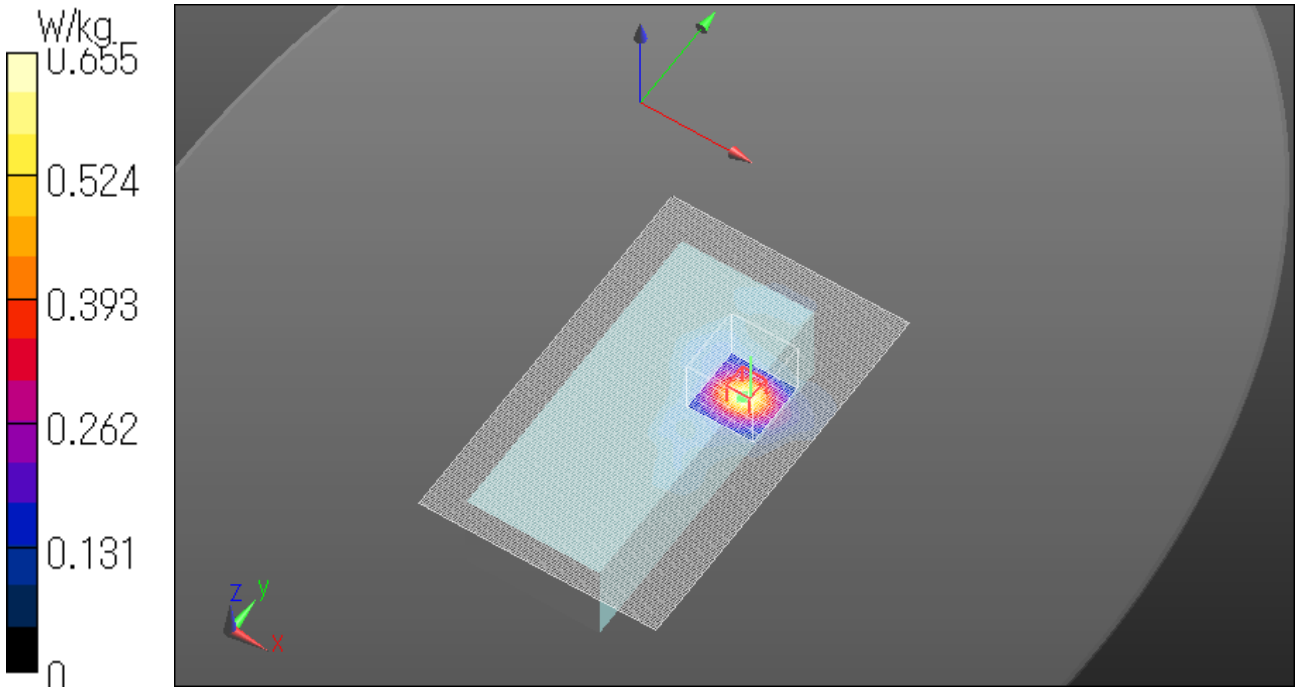

WLAN W5.2 Antenna 2 11ac40 MCS0 5230MHz Bottom 0mm
Communication System: UID 0, WLAN (0); Communication System Band: 11n40/ac40; Frequency: 5230 MHz; Duty Cycle: 1:1
Medium parameters used: f = 5230 MHz; σ = 5.422 S/m; ε_r = 47.284; ρ = 1000 kg/m^3
Phantom section: Flat Section
Measurement Standard: DASY5 (IEEE/IEC/ANSI C63.19-2007)
DASY5 Configuration
Probe: EX3DV4 - SN3922; ConvF(4.46, 4.46, 4.46); Calibrated: 2015/06/17;
Sensor-Surface: 1.4mm (Mechanical Surface Detection)
Electronics: DAE4 Sn1372; Calibrated: 2015/06/15
Phantom: ELI v5.0 TP1207 (30deg probe tilt); Type: QDOVA002AA; Serial: TP:1207
Measurement SW: DASY52, Version 52.8 (8); SEMCAD X Version 14.6.10 (7331)

Area Scan (111x161x1): Interpolated grid: dx=1.000 mm, dy=1.000 mm
Maximum value of SAR (interpolated) = 0.0754 W/kg

Zoom Scan (8x8x7)/Cube 0: Measurement grid: dx=4mm, dy=4mm, dz=1.4mm
Reference Value = 4.310 V/m; Power Drift = 0.00 dB
Peak SAR (extrapolated) = 0.222 W/kg
SAR(1 g) = 0.032 W/kg
Maximum value of SAR (measured) = 0.0879 W/kg
Date: 2015/11/26
Ambient Temp. : 24.0 degree.C. Liquid Temp.; 23.5 degree.C.

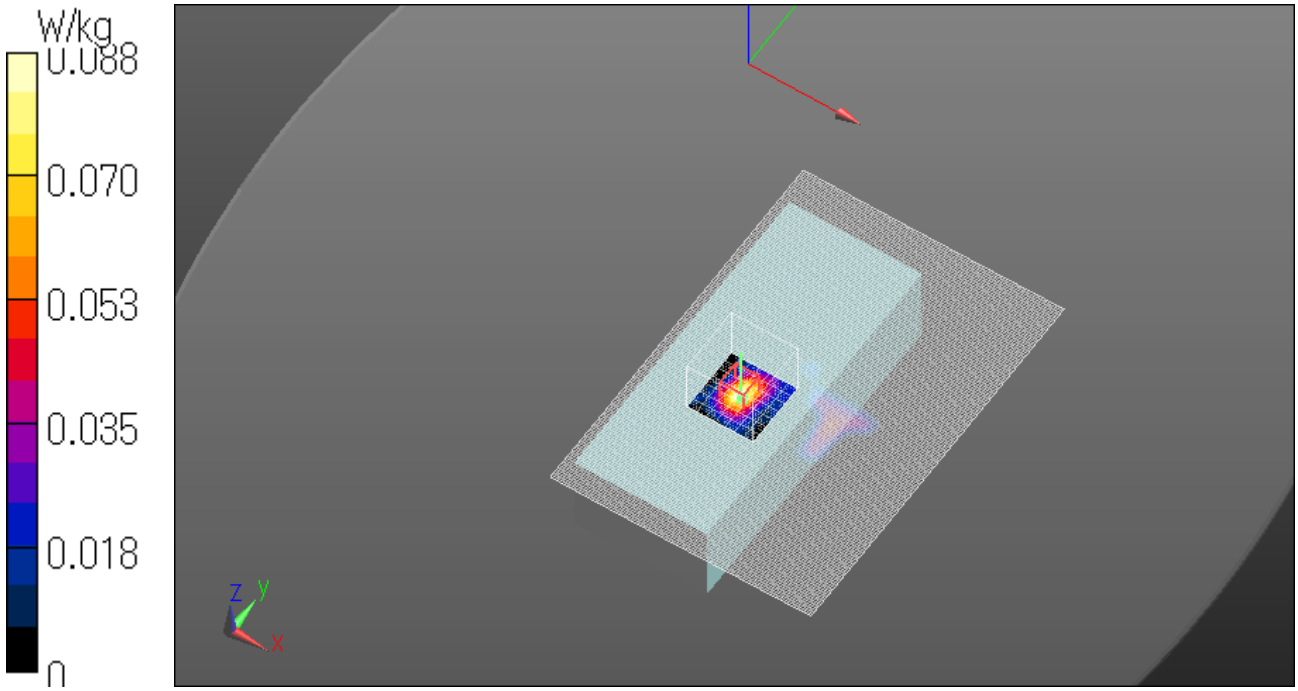

WLAN W5.2 Antenna 2 11ac40 MCS0 5230MHz Left 0mm
Communication System: UID 0, WLAN (0); Communication System Band: 11n40/ac40; Frequency: 5230 MHz; Duty Cycle: 1:1
Medium parameters used: f = 5230 MHz; σ = 5.422 S/m; ε_r = 47.284; ρ = 1000 kg/m^3
Phantom section: Flat Section
Measurement Standard: DASY5 (IEEE/IEC/ANSI C63.19-2007)
DASY5 Configuration
Probe: EX3DV4 - SN3922; ConvF(4.46, 4.46, 4.46); Calibrated: 2015/06/17;
Sensor-Surface: 1.4mm (Mechanical Surface Detection)
Electronics: DAE4 Sn1372; Calibrated: 2015/06/15
Phantom: ELI v5.0 TP1207 (30deg probe tilt); Type: QDOVA002AA; Serial: TP:1207
Measurement SW: DASY52, Version 52.8 (8); SEMCAD X Version 14.6.10 (7331)

Area Scan (101x101x1): Interpolated grid: dx=1.000 mm, dy=1.000 mm
Maximum value of SAR (interpolated) = 0.0585 W/kg

Zoom Scan (8x8x7)/Cube 0: Measurement grid: dx=4mm, dy=4mm, dz=1.4mm
Reference Value = 3.264 V/m; Power Drift = 0.07 dB
Peak SAR (extrapolated) = 0.135 W/kg
SAR(1 g) = 0.019 W/kg
Maximum value of SAR (measured) = 0.0532 W/kg
Date: 2015/11/26
Ambient Temp. : 24.0 degree.C. Liquid Temp.; 23.5 degree.C.

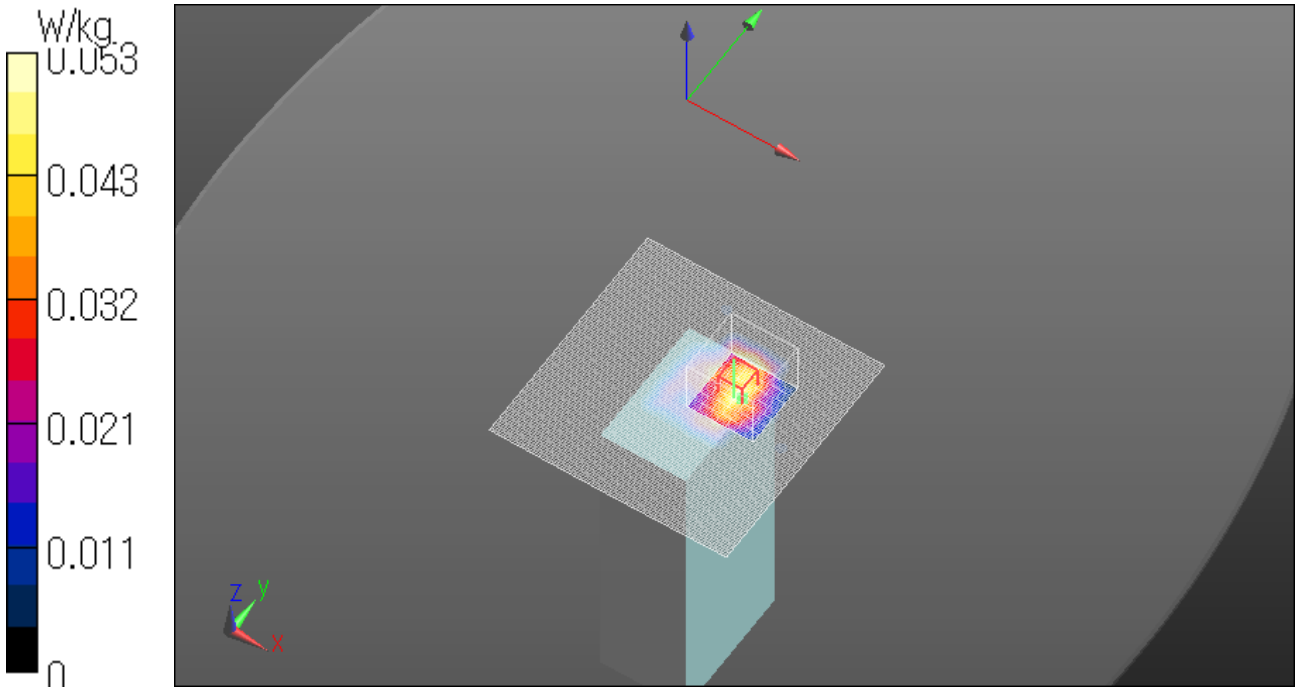

WLAN W5.2 Antenna 2 11ac40 MCS0 5190MHz Front 0mm
Communication System: UID 0, WLAN (0); Communication System Band: 11n40/ac40; Frequency: 5190 MHz; Duty Cycle: 1:1
Medium parameters used: f = 5190 MHz; σ = 5.318 S/m; ε_r = 47.468; ρ = 1000 kg/m^3
Phantom section: Flat Section
Measurement Standard: DASY5 (IEEE/IEC/ANSI C63.19-2007)
DASY5 Configuration
Probe: EX3DV4 - SN3922; ConvF(4.46, 4.46, 4.46); Calibrated: 2015/06/17;
Sensor-Surface: 1.4mm (Mechanical Surface Detection)
Electronics: DAE4 Sn1372; Calibrated: 2015/06/15
Phantom: ELI v5.0 TP1207 (30deg probe tilt); Type: QDOVA002AA; Serial: TP:1207
Measurement SW: DASY52, Version 52.8 (8); SEMCAD X Version 14.6.10 (7331)

Area Scan (61x161x1): Interpolated grid: dx=1.000 mm, dy=1.000 mm
Maximum value of SAR (interpolated) = 3.10 W/kg

Zoom Scan (8x8x7)/Cube 0: Measurement grid: dx=4mm, dy=4mm, dz=1.4mm
Reference Value = 25.98 V/m; Power Drift = 0.09 dB
Peak SAR (extrapolated) = 5.35 W/kg
SAR(1 g) = 1.06 W/kg
Maximum value of SAR (measured) = 2.69 W/kg
Date: 2015/11/26
Ambient Temp. : 24.0 degree.C. Liquid Temp.; 23.5 degree.C.

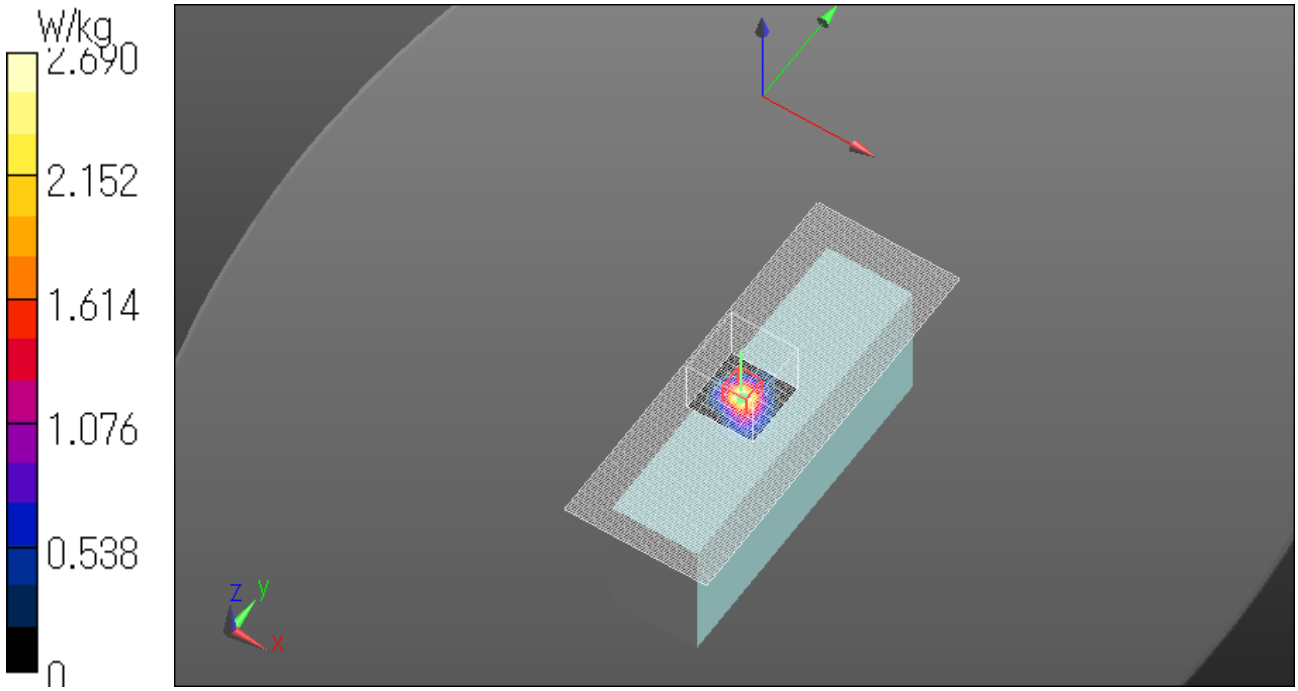

WLAN W5.2 Antenna 2 11n40 MCS0 5230MHz Front 0mm
Communication System: UID 0, WLAN (0); Communication System Band: 11n40/ac40; Frequency: 5230 MHz; Duty Cycle: 1:1
Medium parameters used: f = 5230 MHz; σ = 5.341 S/m; ε_r = 47.636; ρ = 1000 kg/m^3
Phantom section: Flat Section
Measurement Standard: DASY5 (IEEE/IEC/ANSI C63.19-2007)
DASY5 Configuration
Probe: EX3DV4 - SN3922; ConvF(4.46, 4.46, 4.46); Calibrated: 2015/06/17;
Sensor-Surface: 1.4mm (Mechanical Surface Detection)
Electronics: DAE4 Sn1372; Calibrated: 2015/06/15
Phantom: ELI v5.0 TP1207 (30deg probe tilt); Type: QDOVA002AA; Serial: TP:1207
Measurement SW: DASY52, Version 52.8 (8); SEMCAD X Version 14.6.10 (7331)

Area Scan (61x161x1): Interpolated grid: dx=1.000 mm, dy=1.000 mm
Maximum value of SAR (interpolated) = 3.56 W/kg

Zoom Scan (8x8x7)/Cube 0: Measurement grid: dx=4mm, dy=4mm, dz=1.4mm
Reference Value = 26.78 V/m; Power Drift = 0.17 dB
Peak SAR (extrapolated) = 6.02 W/kg
SAR(1 g) = 1.16 W/kg
Maximum value of SAR (measured) = 3.39 W/kg
Date: 2015/11/30
Ambient Temp. : 24.0 degree.C. Liquid Temp.; 23.5 degree.C.

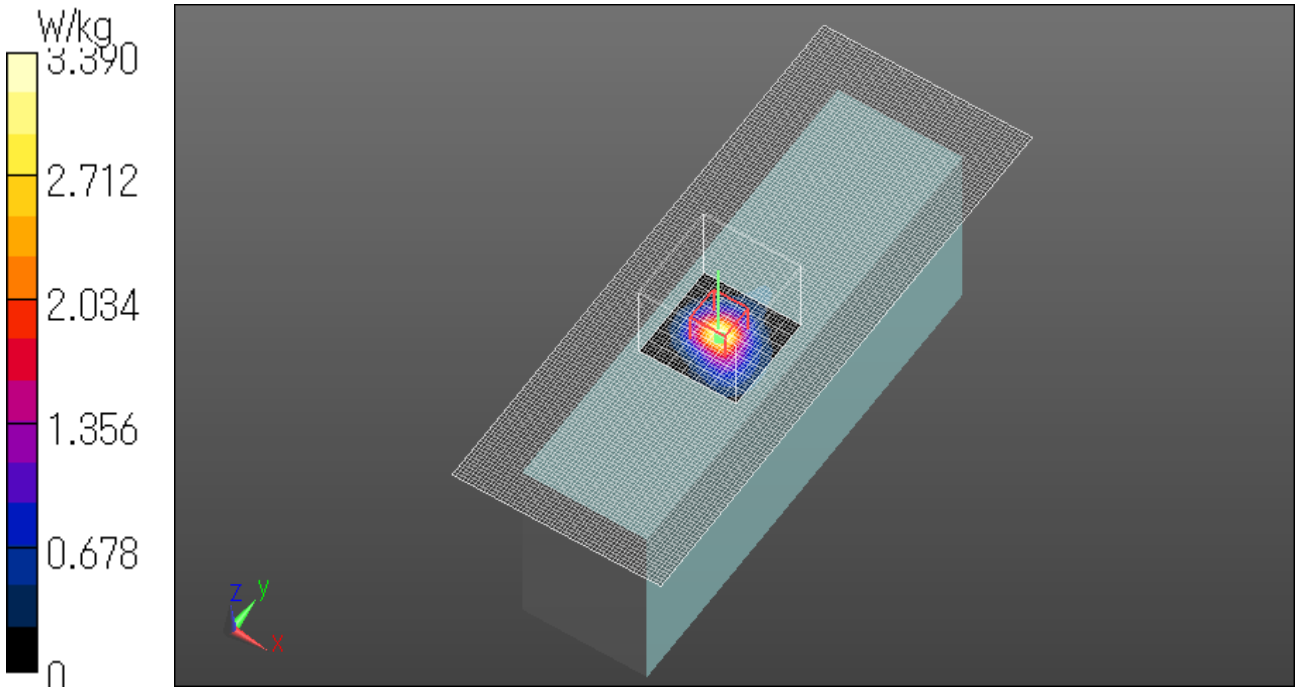

WLAN W5.2 Antenna 2 11n40 MCS0 5190MHz Front 0mm
Communication System: UID 0, WLAN (0); Communication System Band: 11n40/ac40; Frequency: 5190 MHz; Duty Cycle: 1:1
Medium parameters used: f = 5190 MHz; σ = 5.243 S/m; ε_r = 47.763; ρ = 1000 kg/m^3
Phantom section: Flat Section
Measurement Standard: DASY5 (IEEE/IEC/ANSI C63.19-2007)
DASY5 Configuration
Probe: EX3DV4 - SN3922; ConvF(4.46, 4.46, 4.46); Calibrated: 2015/06/17;
Sensor-Surface: 1.4mm (Mechanical Surface Detection)
Electronics: DAE4 Sn1372; Calibrated: 2015/06/15
Phantom: ELI v5.0 TP1207 (30deg probe tilt); Type: QDOVA002AA; Serial: TP:1207
Measurement SW: DASY52, Version 52.8 (8); SEMCAD X Version 14.6.10 (7331)

Area Scan (61x161x1): Interpolated grid: dx=1.000 mm, dy=1.000 mm
Maximum value of SAR (interpolated) = 3.14 W/kg

Zoom Scan (8x8x7)/Cube 0: Measurement grid: dx=4mm, dy=4mm, dz=1.4mm
Reference Value = 26.30 V/m; Power Drift = -0.13 dB
Peak SAR (extrapolated) = 5.22 W/kg
SAR(1 g) = 0.995 W/kg
Maximum value of SAR (measured) = 2.76 W/kg
Date: 2015/11/30
Ambient Temp. : 24.0 degree.C. Liquid Temp.; 23.5 degree.C.

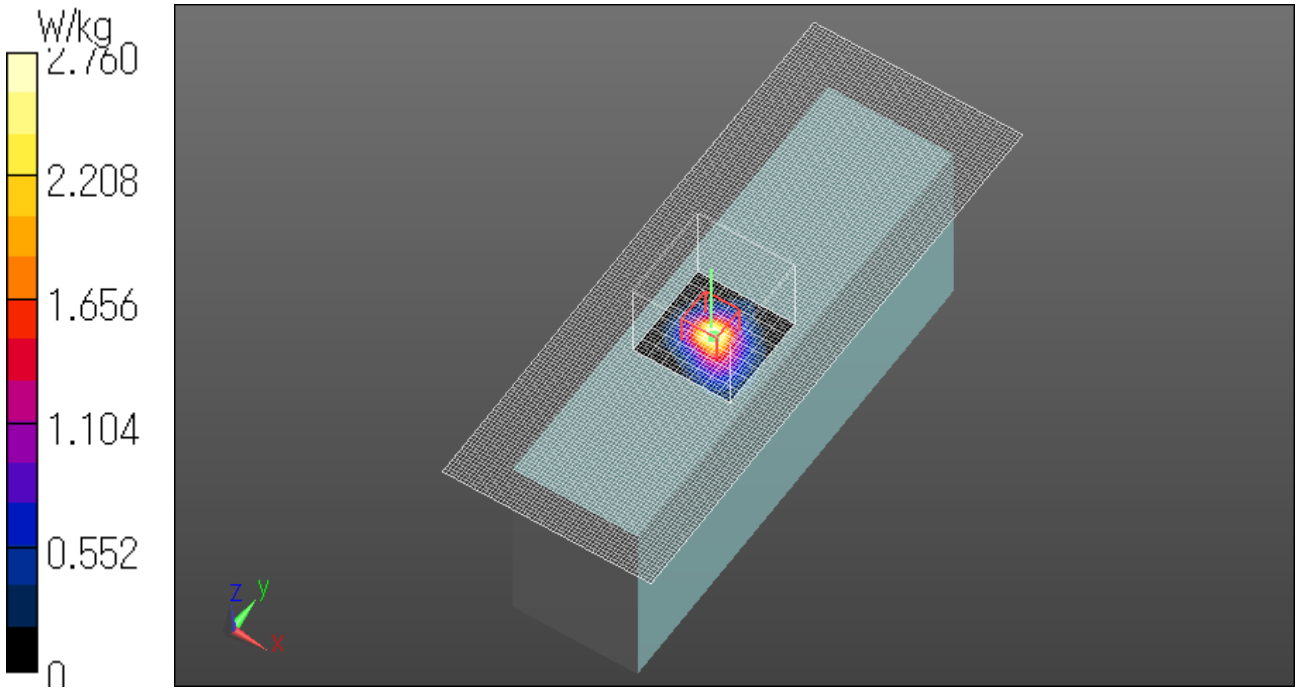

WLAN W5.2 Antenna 2 11a 6Mbps 5240MHz Front 0mm
Communication System: UID 0, WLAN (0); Communication System Band: 11a; Frequency: 5240 MHz; Duty Cycle: 1:1
Medium parameters used: f = 5240 MHz; σ = 5.353 S/m; ε_r = 47.552; ρ = 1000 kg/m^3
Phantom section: Flat Section
Measurement Standard: DASY5 (IEEE/IEC/ANSI C63.19-2007)
DASY5 Configuration
Probe: EX3DV4 - SN3922; ConvF(4.46, 4.46, 4.46); Calibrated: 2015/06/17;
Sensor-Surface: 1.4mm (Mechanical Surface Detection)
Electronics: DAE4 Sn1372; Calibrated: 2015/06/15
Phantom: ELI v5.0 TP1207 (30deg probe tilt); Type: QDOVA002AA; Serial: TP:1207
Measurement SW: DASY52, Version 52.8 (8); SEMCAD X Version 14.6.10 (7331)

Area Scan (61x161x1): Interpolated grid: dx=1.000 mm, dy=1.000 mm
Maximum value of SAR (interpolated) = 3.72 W/kg

Zoom Scan (8x8x7)/Cube 0: Measurement grid: dx=4mm, dy=4mm, dz=1.4mm
Reference Value = 29.14 V/m; Power Drift = -0.08 dB
Peak SAR (extrapolated) = 6.50 W/kg
SAR(1 g) = 1.31 W/kg
Maximum value of SAR (measured) = 3.66 W/kg
Date: 2015/11/30
Ambient Temp. : 24.0 degree.C. Liquid Temp.; 23.5 degree.C.

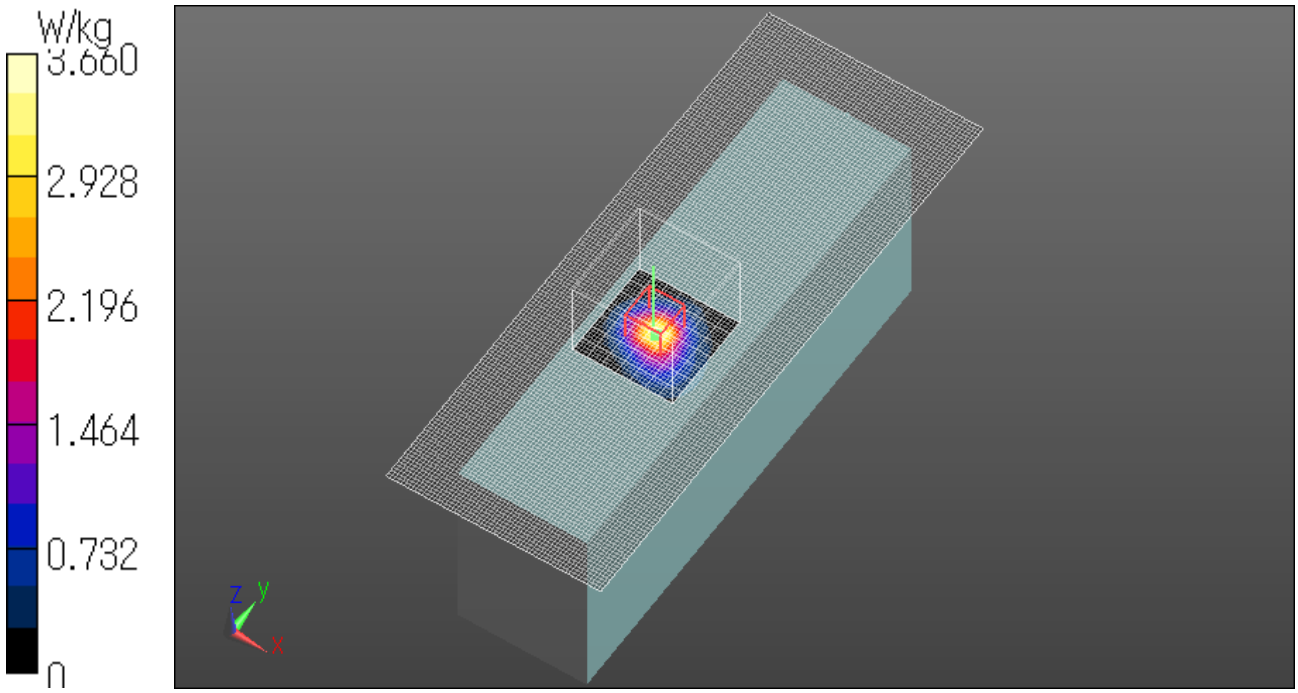

WLAN W5.2 Antenna 2 11a 6Mbps 5220MHz Front 0mm
Communication System: UID 0, WLAN (0); Communication System Band: 11a; Frequency: 5220 MHz; Duty Cycle: 1:1
Medium parameters used: f = 5220 MHz; σ = 5.309 S/m; ε_r = 47.554; ρ = 1000 kg/m^3
Phantom section: Flat Section
Measurement Standard: DASY5 (IEEE/IEC/ANSI C63.19-2007)
DASY5 Configuration
Probe: EX3DV4 - SN3922; ConvF(4.46, 4.46, 4.46); Calibrated: 2015/06/17;
Sensor-Surface: 1.4mm (Mechanical Surface Detection)
Electronics: DAE4 Sn1372; Calibrated: 2015/06/15
Phantom: ELI v5.0 TP1207 (30deg probe tilt); Type: QDOVA002AA; Serial: TP:1207
Measurement SW: DASY52, Version 52.8 (8); SEMCAD X Version 14.6.10 (7331)

Area Scan (61x161x1): Interpolated grid: dx=1.000 mm, dy=1.000 mm
Maximum value of SAR (interpolated) = 3.49 W/kg

Zoom Scan (8x8x7)/Cube 0: Measurement grid: dx=4mm, dy=4mm, dz=1.4mm
Reference Value = 27.98 V/m; Power Drift = -0.15 dB
Peak SAR (extrapolated) = 6.28 W/kg
SAR(1 g) = 1.21 W/kg
Maximum value of SAR (measured) = 3.25 W/kg
Date: 2015/11/30
Ambient Temp. : 24.0 degree.C. Liquid Temp.; 23.5 degree.C.

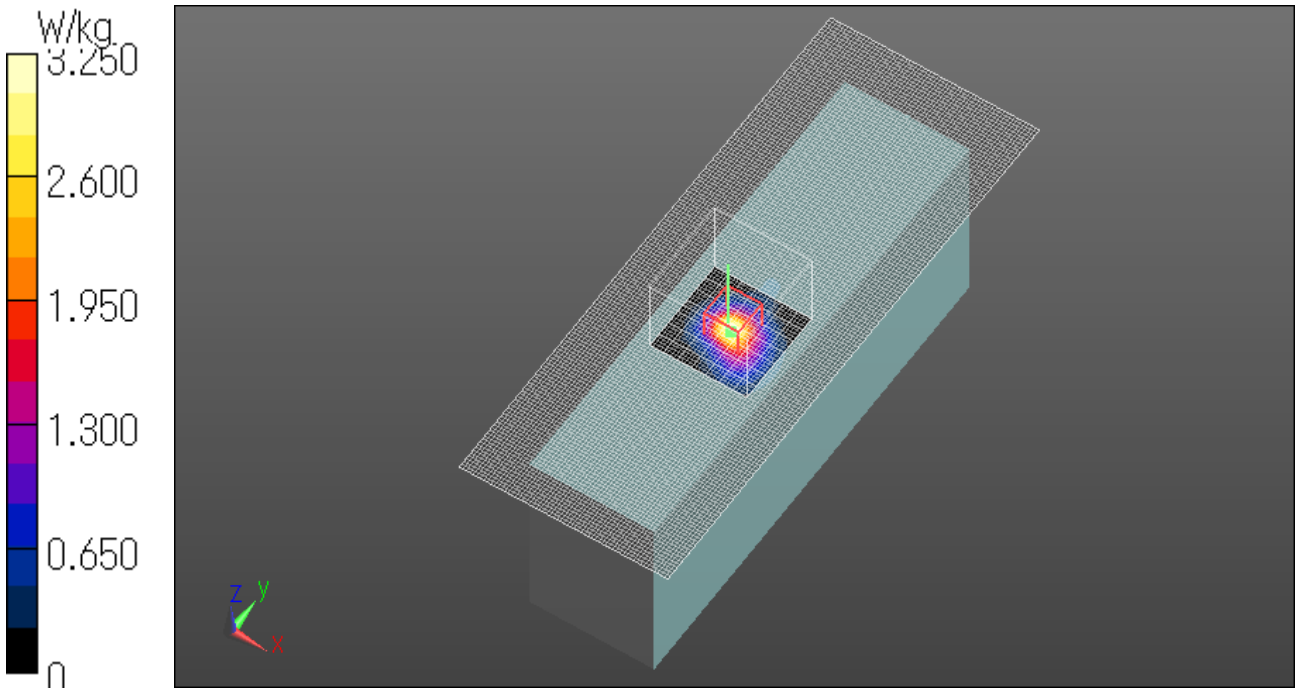

WLAN W5.2 Antenna 2 11a 6Mbps 5200MHz Front 0mm
Communication System: UID 0, WLAN (0); Communication System Band: 11a; Frequency: 5200 MHz; Duty Cycle: 1:1
Medium parameters used: f = 5200 MHz; σ = 5.244 S/m; ε_r = 47.721; ρ = 1000 kg/m^3
Phantom section: Flat Section
Measurement Standard: DASY5 (IEEE/IEC/ANSI C63.19-2007)
DASY5 Configuration
Probe: EX3DV4 - SN3922; ConvF(4.46, 4.46, 4.46); Calibrated: 2015/06/17;
Sensor-Surface: 1.4mm (Mechanical Surface Detection)
Electronics: DAE4 Sn1372; Calibrated: 2015/06/15
Phantom: ELI v5.0 TP1207 (30deg probe tilt); Type: QDOVA002AA; Serial: TP:1207
Measurement SW: DASY52, Version 52.8 (8); SEMCAD X Version 14.6.10 (7331)

Area Scan (61x161x1): Interpolated grid: dx=1.000 mm, dy=1.000 mm
Maximum value of SAR (interpolated) = 3.26 W/kg

Zoom Scan (8x8x7)/Cube 0: Measurement grid: dx=4mm, dy=4mm, dz=1.4mm
Reference Value = 27.13 V/m; Power Drift = -0.10 dB
Peak SAR (extrapolated) = 5.50 W/kg
SAR(1 g) = 1.09 W/kg
Maximum value of SAR (measured) = 2.99 W/kg
Date: 2015/11/30
Ambient Temp. : 24.0 degree.C. Liquid Temp.; 23.5 degree.C.

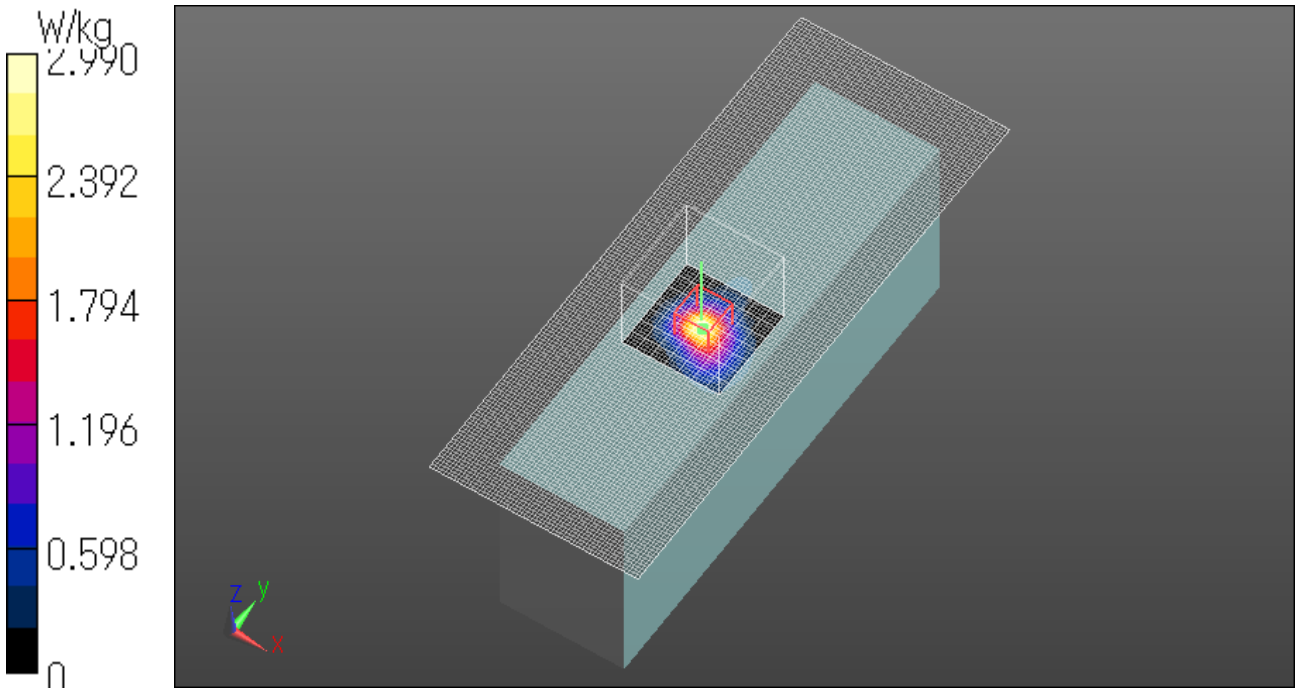

WLAN W5.2 Antenna 2 11a 6Mbps 5240MHz Front 0mm Repeat
Communication System: UID 0, WLAN (0); Communication System Band: 11a; Frequency: 5240 MHz; Duty Cycle: 1:1
Medium parameters used: f = 5240 MHz; σ = 5.353 S/m; ε_r = 47.552; ρ = 1000 kg/m^3
Phantom section: Flat Section
Measurement Standard: DASY5 (IEEE/IEC/ANSI C63.19-2007)
DASY5 Configuration
Probe: EX3DV4 - SN3922; ConvF(4.46, 4.46, 4.46); Calibrated: 2015/06/17;
Sensor-Surface: 1.4mm (Mechanical Surface Detection)
Electronics: DAE4 Sn1372; Calibrated: 2015/06/15
Phantom: ELI v5.0 TP1207 (30deg probe tilt); Type: QDOVA002AA; Serial: TP:1207
Measurement SW: DASY52, Version 52.8 (8); SEMCAD X Version 14.6.10 (7331)

Area Scan (61x161x1): Interpolated grid: dx=1.000 mm, dy=1.000 mm
Maximum value of SAR (interpolated) = 3.72 W/kg

Zoom Scan (8x8x7)/Cube 0: Measurement grid: dx=4mm, dy=4mm, dz=1.4mm
Reference Value = 28.59 V/m; Power Drift = -0.14 dB
Peak SAR (extrapolated) = 6.17 W/kg
SAR(1 g) = 1.2 W/kg
Maximum value of SAR (measured) = 3.14 W/kg
Date: 2015/11/30
Ambient Temp. : 24.0 degree.C. Liquid Temp.; 23.5 degree.C.

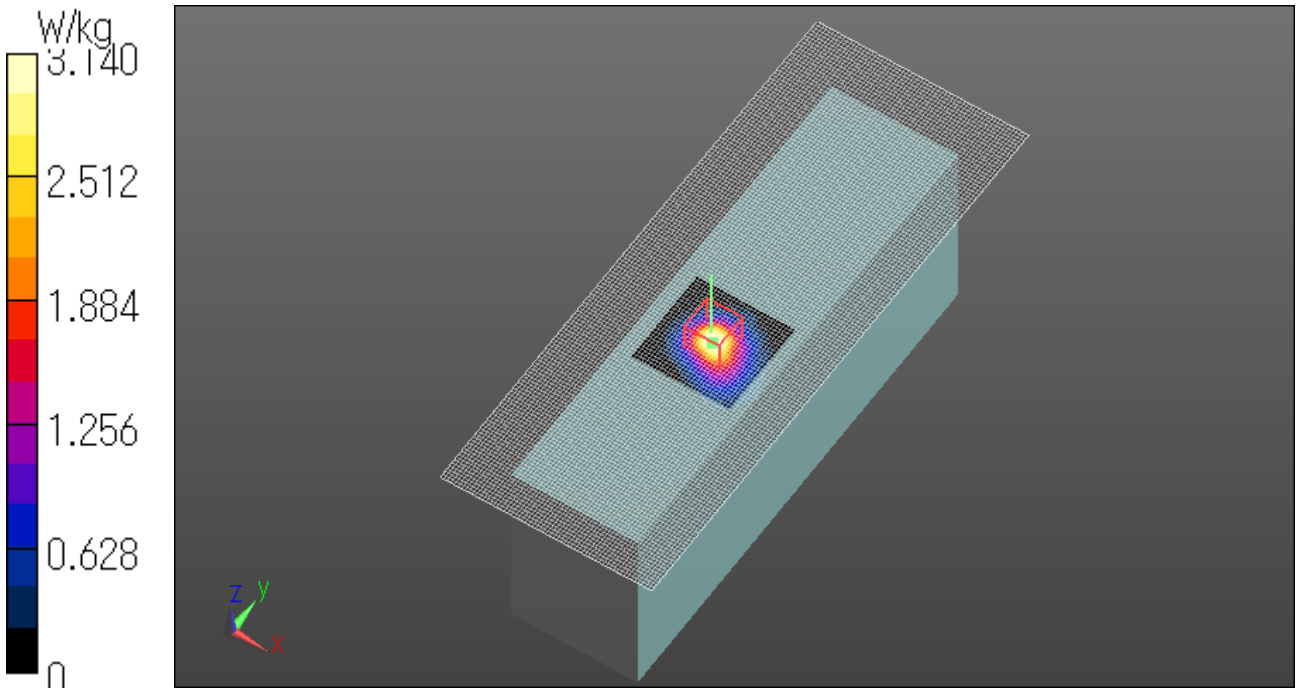

4. Measurement data(5.8GHz)

WLAN W5.8 Antenna 1 11ac40 MCS0 5795MHz Rear 0mm
Communication System: UID 0, WLAN (0); Communication System Band: 11n40/ac40; Frequency: 5795 MHz; Duty Cycle: 1:1
Medium parameters used (interpolated): f = 5795 MHz; σ = 6.076 S/m; ε_r = 46.839; ρ = 1000 kg/m^3
Phantom section: Flat Section
Measurement Standard: DASY5 (IEEE/IEC/ANSI C63.19-2007)
DASY5 Configuration
Probe: EX3DV4 - SN3922; ConvF(4.08, 4.08, 4.08); Calibrated: 2015/06/17;
Sensor-Surface: 1.4mm (Mechanical Surface Detection)
Electronics: DAE4 Sn1372; Calibrated: 2015/06/15
Phantom: ELI v5.0 TP1207 (30deg probe tilt); Type: QDOVA002AA; Serial: TP:1207
Measurement SW: DASY52, Version 52.8 (8); SEMCAD X Version 14.6.10 (7331)

Area Scan (61x161x1): Interpolated grid: dx=1.000 mm, dy=1.000 mm

Maximum value of SAR (interpolated) = 2.43 W/kg

Zoom Scan (8x8x7)/Cube 0: Measurement grid: dx=4mm, dy=4mm, dz=1.4mm
Reference Value = 21.50 V/m; Power Drift = -0.07 dB
Peak SAR (extrapolated) = 3.74 W/kg
SAR(1 g) = 0.600 W/kg

Maximum value of SAR (measured) = 1.77 W/kg
Date: 2015/11/30
Ambient Temp. : 24.0 degree.C. Liquid Temp.; 23.5 degree.C.

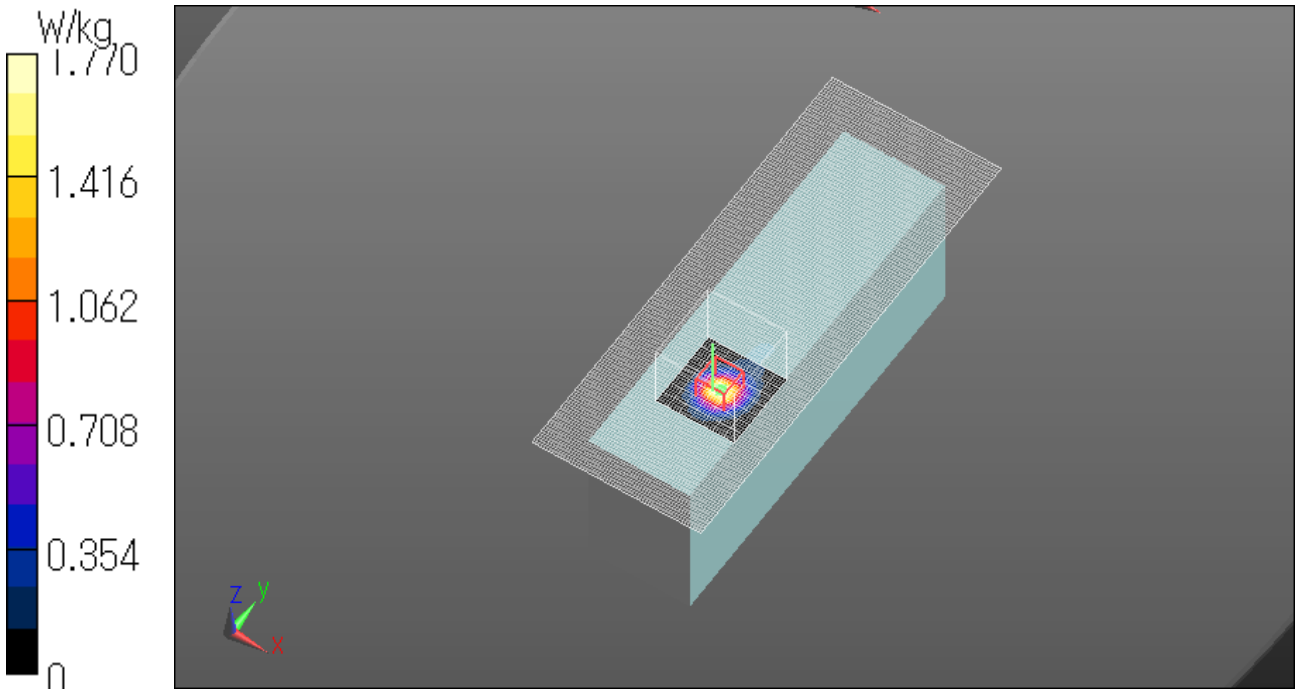

WLAN W5.8 Antenna 1 11ac40 MCS0 5795MHz Top 0mm
Communication System: UID 0, WLAN (0); Communication System Band: 11n40/ac40; Frequency: 5795 MHz; Duty Cycle: 1:1
Medium parameters used (interpolated): f = 5795 MHz; σ = 6.076 S/m; ε_r = 46.839; ρ = 1000 kg/m^3
Phantom section: Flat Section
Measurement Standard: DASY5 (IEEE/IEC/ANSI C63.19-2007)
DASY5 Configuration
Probe: EX3DV4 - SN3922; ConvF(4.08, 4.08, 4.08); Calibrated: 2015/06/17;
Sensor-Surface: 1.4mm (Mechanical Surface Detection)
Electronics: DAE4 Sn1372; Calibrated: 2015/06/15
Phantom: ELI v5.0 TP1207 (30deg probe tilt); Type: QDOVA002AA; Serial: TP:1207
Measurement SW: DASY52, Version 52.8 (8); SEMCAD X Version 14.6.10 (7331)

Area Scan 2 (81x161x1): Interpolated grid: dx=1.000 mm, dy=1.000 mm

Maximum value of SAR (interpolated) = 0.216 W/kg

Zoom Scan (8x8x7)/Cube 0: Measurement grid: dx=4mm, dy=4mm, dz=1.4mm
Reference Value = 5.644 V/m; Power Drift = -0.11 dB
Peak SAR (extrapolated) = 0.245 W/kg
SAR(1 g) = 0.050 W/kg

Maximum value of SAR (measured) = 0.142 W/kg
Date: 2015/11/30
Ambient Temp. : 24.0 degree.C. Liquid Temp.; 23.5 degree.C.

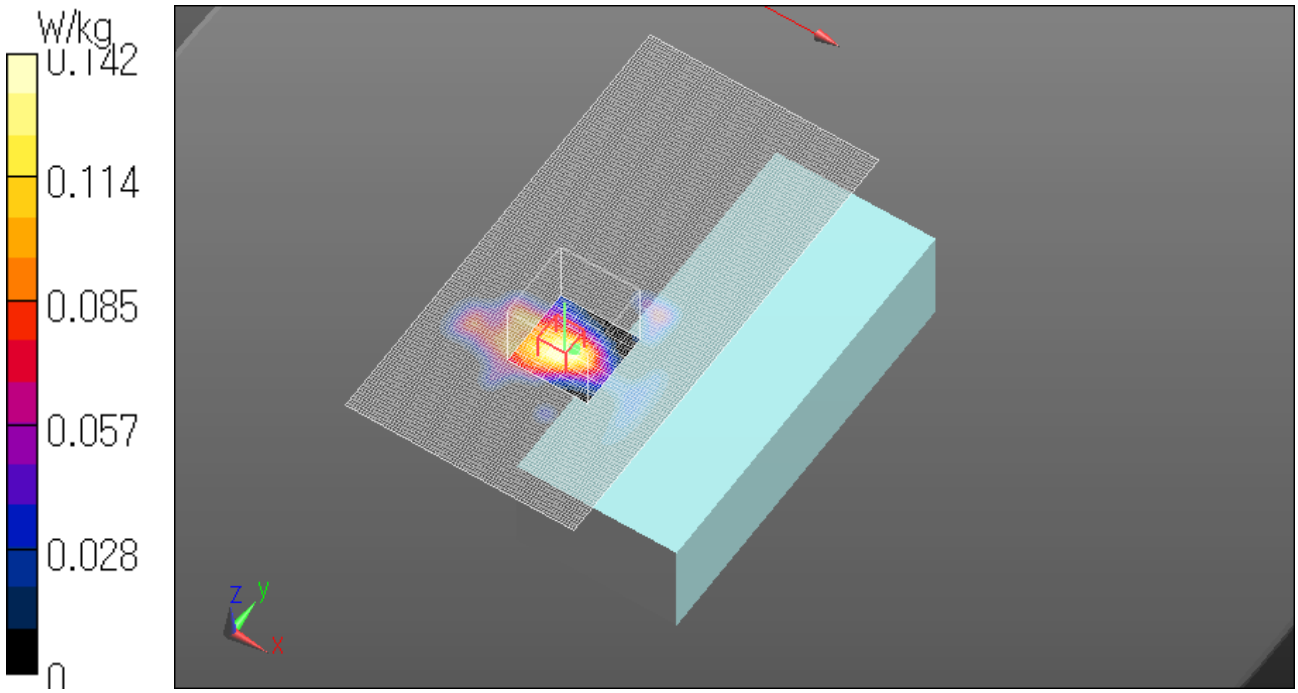

WLAN W5.8 Antenna 1 11ac40 MCS0 5795MHz Bottom 0mm
Communication System: UID 0, WLAN (0); Communication System Band: 11n40/ac40; Frequency: 5795 MHz; Duty Cycle: 1:1
Medium parameters used (interpolated): f = 5795 MHz; σ = 6.076 S/m; ε_r = 46.839; ρ = 1000 kg/m^3
Phantom section: Flat Section
Measurement Standard: DASY5 (IEEE/IEC/ANSI C63.19-2007)
DASY5 Configuration
Probe: EX3DV4 - SN3922; ConvF(4.08, 4.08, 4.08); Calibrated: 2015/06/17;
Sensor-Surface: 1.4mm (Mechanical Surface Detection)
Electronics: DAE4 Sn1372; Calibrated: 2015/06/15
Phantom: ELI v5.0 TP1207 (30deg probe tilt); Type: QDOVA002AA; Serial: TP:1207
Measurement SW: DASY52, Version 52.8 (8); SEMCAD X Version 14.6.10 (7331)

Area Scan 2 (111x161x1): Interpolated grid: dx=1.000 mm, dy=1.000 mm

Maximum value of SAR (interpolated) = 0.0388 W/kg

Zoom Scan (8x8x7)/Cube 0: Measurement grid: dx=4mm, dy=4mm, dz=1.4mm
Reference Value = 2.573 V/m; Power Drift = 0.10 dB
Peak SAR (extrapolated) = 0.183 W/kg
SAR(1 g) = 0.012 W/kg

Maximum value of SAR (measured) = 0.0377 W/kg
Date: 2015/11/30
Ambient Temp. : 24.0 degree.C. Liquid Temp.; 23.5 degree.C.

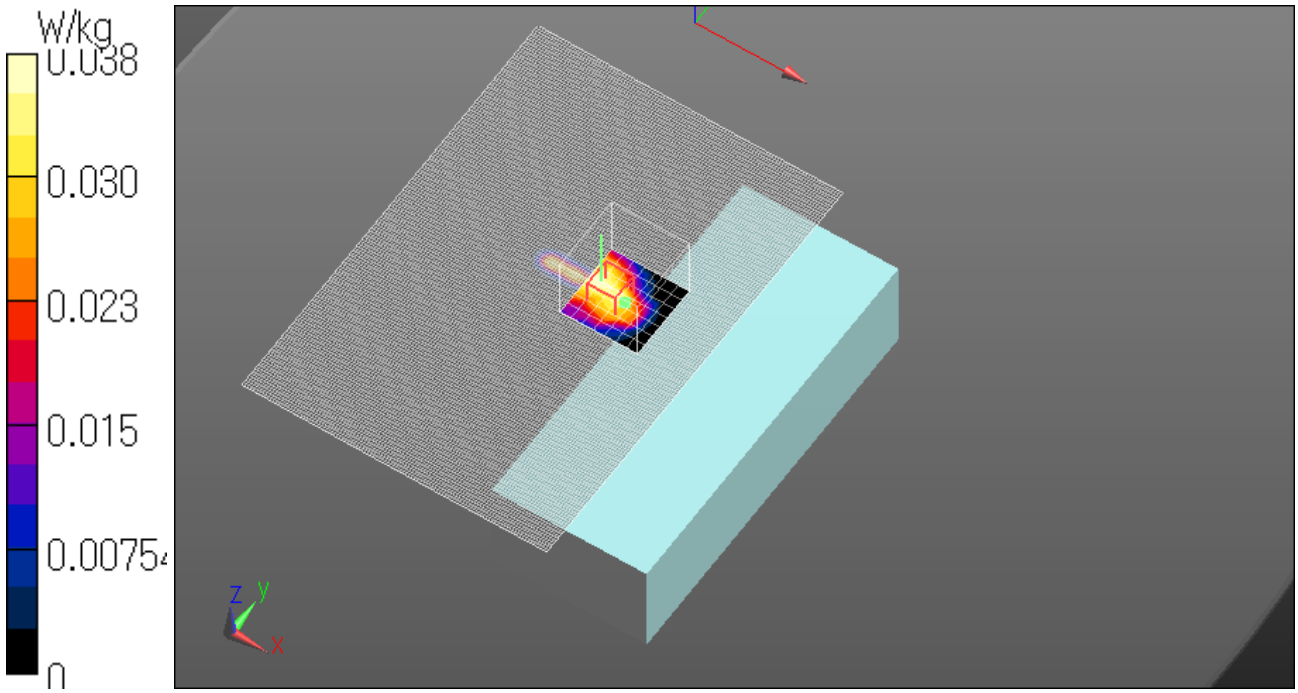

WLAN W5.8 Antenna 1 11ac40 MCS0 5795MHz Right 0mm
Communication System: UID 0, WLAN (0); Communication System Band: 11n40/ac40; Frequency: 5795 MHz; Duty Cycle: 1:1
Medium parameters used (interpolated): f = 5795 MHz; σ = 6.076 S/m; ε_r = 46.839; ρ = 1000 kg/m^3
Phantom section: Flat Section
Measurement Standard: DASY5 (IEEE/IEC/ANSI C63.19-2007)
DASY5 Configuration
Probe: EX3DV4 - SN3922; ConvF(4.08, 4.08, 4.08); Calibrated: 2015/06/17;
Sensor-Surface: 1.4mm (Mechanical Surface Detection)
Electronics: DAE4 Sn1372; Calibrated: 2015/06/15
Phantom: ELI v5.0 TP1207 (30deg probe tilt); Type: QDOVA002AA; Serial: TP:1207
Measurement SW: DASY52, Version 52.8 (8); SEMCAD X Version 14.6.10 (7331)

Area Scan (101x101x1): Interpolated grid: dx=1.000 mm, dy=1.000 mm

Maximum value of SAR (interpolated) = 0.0338 W/kg

Zoom Scan (8x8x7)/Cube 0: Measurement grid: dx=4mm, dy=4mm, dz=1.4mm
Reference Value = 3.014 V/m; Power Drift = -0.19 dB
Peak SAR (extrapolated) = 0.256 W/kg
SAR(1 g) = 0.019 W/kg

Maximum value of SAR (measured) = 0.0842 W/kg
Date: 2015/11/30
Ambient Temp. : 24.0 degree.C. Liquid Temp.; 23.5 degree.C.

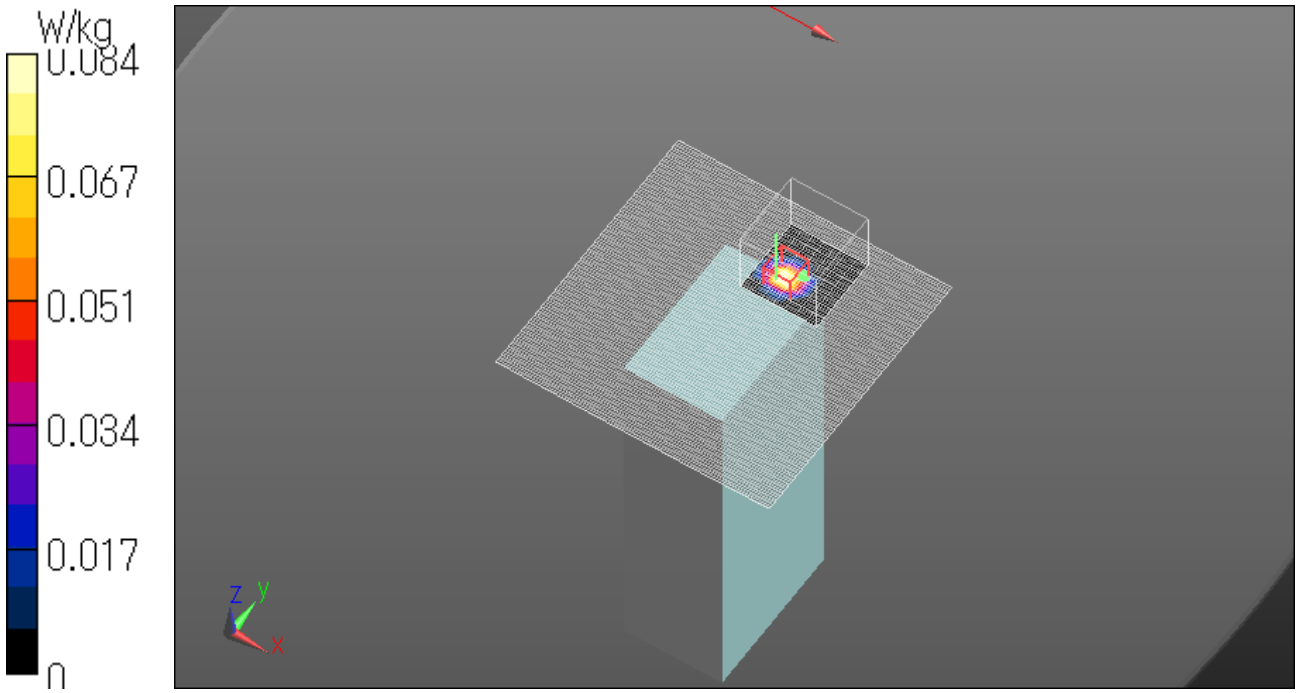

WLAN W5.8 Antenna 2 11ac40 MCS0 5795MHz Front 0mm
Communication System: UID 0, WLAN (0); Communication System Band: 11n40/ac40; Frequency: 5795 MHz; Duty Cycle: 1:1
Medium parameters used (interpolated): f = 5795 MHz; σ = 6.076 S/m; ε_r = 46.839; ρ = 1000 kg/m^3
Phantom section: Flat Section
Measurement Standard: DASY5 (IEEE/IEC/ANSI C63.19-2007)
DASY5 Configuration
Probe: EX3DV4 - SN3922; ConvF(4.08, 4.08, 4.08); Calibrated: 2015/06/17;
Sensor-Surface: 1.4mm (Mechanical Surface Detection)
Electronics: DAE4 Sn1372; Calibrated: 2015/06/15
Phantom: ELI v5.0 TP1207 (30deg probe tilt); Type: QDOVA002AA; Serial: TP:1207
Measurement SW: DASY52, Version 52.8 (8); SEMCAD X Version 14.6.10 (7331)

Area Scan (61x161x1): Interpolated grid: dx=1.000 mm, dy=1.000 mm

Maximum value of SAR (interpolated) = 3.18 W/kg

Zoom Scan (8x8x7)/Cube 0: Measurement grid: dx=4mm, dy=4mm, dz=1.4mm
Reference Value = 26.88 V/m; Power Drift = 0.14 dB
Peak SAR (extrapolated) = 6.38 W/kg
SAR(1 g) = 1.14 W/kg

Maximum value of SAR (measured) = 3.48 W/kg
Date: 2015/11/30
Ambient Temp. : 24.0 degree.C. Liquid Temp.; 23.5 degree.C.

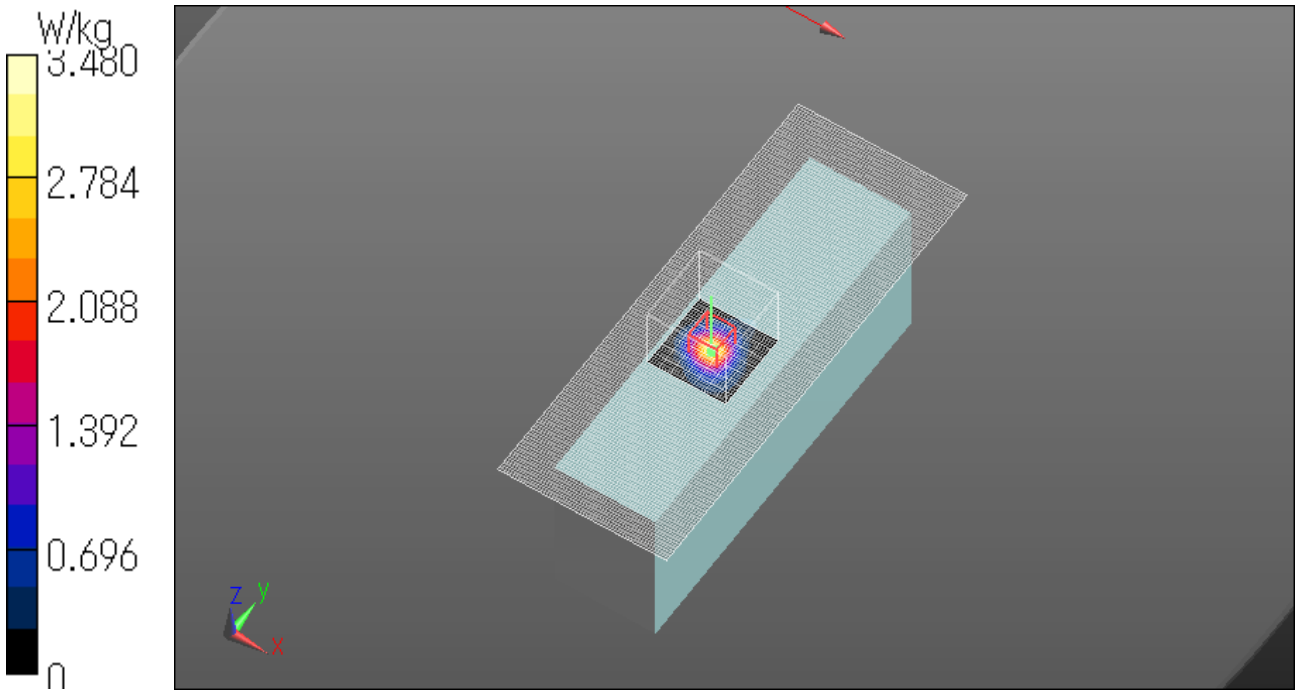

WLAN W5.8 Antenna 2 11ac40 MCS0 5795MHz Top 0mm
Communication System: UID 0, WLAN (0); Communication System Band: 11n40/ac40; Frequency: 5795 MHz; Duty Cycle: 1:1
Medium parameters used (interpolated): f = 5795 MHz; σ = 6.076 S/m; ε_r = 46.839; ρ = 1000 kg/m^3
Phantom section: Flat Section
Measurement Standard: DASY5 (IEEE/IEC/ANSI C63.19-2007)
DASY5 Configuration
Probe: EX3DV4 - SN3922; ConvF(4.08, 4.08, 4.08); Calibrated: 2015/06/17;
Sensor-Surface: 1.4mm (Mechanical Surface Detection)
Electronics: DAE4 Sn1372; Calibrated: 2015/06/15
Phantom: ELI v5.0 TP1207 (30deg probe tilt); Type: QDOVA002AA; Serial: TP:1207
Measurement SW: DASY52, Version 52.8 (8); SEMCAD X Version 14.6.10 (7331)

Area Scan (81x161x1): Interpolated grid: dx=1.000 mm, dy=1.000 mm

Maximum value of SAR (interpolated) = 0.495 W/kg

Zoom Scan (8x8x7)/Cube 0: Measurement grid: dx=4mm, dy=4mm, dz=1.4mm
Reference Value = 10.36 V/m; Power Drift = -0.13 dB
Peak SAR (extrapolated) = 0.894 W/kg
SAR(1 g) = 0.202 W/kg

Maximum value of SAR (measured) = 0.526 W/kg
Date: 2015/11/30
Ambient Temp. : 24.0 degree.C. Liquid Temp.; 23.5 degree.C.

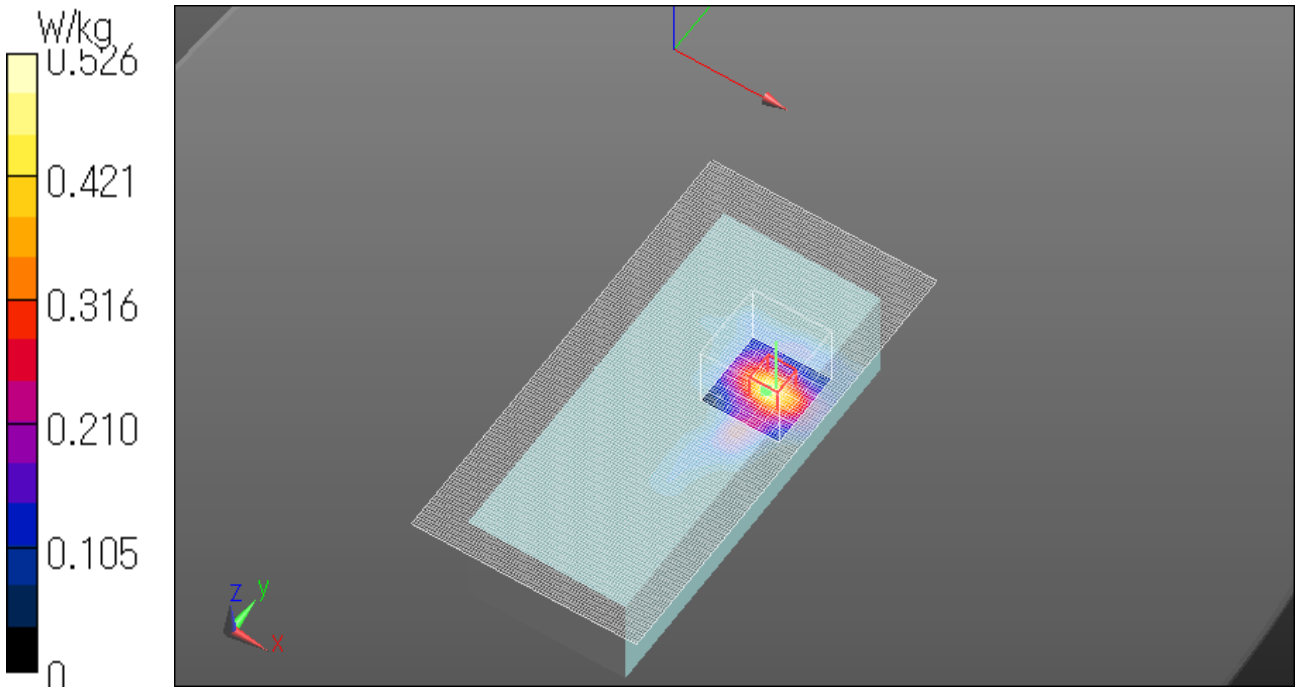

WLAN W5.8 Antenna 2 11ac40 MCS0 5795MHz Bottom 0mm
Communication System: UID 0, WLAN (0); Communication System Band: 11n40/ac40; Frequency: 5795 MHz; Duty Cycle: 1:1
Medium parameters used (interpolated): f = 5795 MHz; σ = 6.076 S/m; ε_r = 46.839; ρ = 1000 kg/m^3
Phantom section: Flat Section
Measurement Standard: DASY5 (IEEE/IEC/ANSI C63.19-2007)
DASY5 Configuration
Probe: EX3DV4 - SN3922; ConvF(4.08, 4.08, 4.08); Calibrated: 2015/06/17;
Sensor-Surface: 1.4mm (Mechanical Surface Detection)
Electronics: DAE4 Sn1372; Calibrated: 2015/06/15
Phantom: ELI v5.0 TP1207 (30deg probe tilt); Type: QDOVA002AA; Serial: TP:1207
Measurement SW: DASY52, Version 52.8 (8); SEMCAD X Version 14.6.10 (7331)

Area Scan (111x161x1): Interpolated grid: dx=1.000 mm, dy=1.000 mm

Maximum value of SAR (interpolated) = 0.162 W/kg

Zoom Scan (9x9x7)/Cube 0: Measurement grid: dx=4mm, dy=4mm, dz=1.4mm
Reference Value = 3.310 V/m; Power Drift = -0.12 dB
Peak SAR (extrapolated) = 0.321 W/kg
SAR(1 g) = 0.023 W/kg

Maximum value of SAR (measured) = 0.0740 W/kg
Date: 2015/11/30
Ambient Temp. : 24.0 degree.C. Liquid Temp.; 23.5 degree.C.

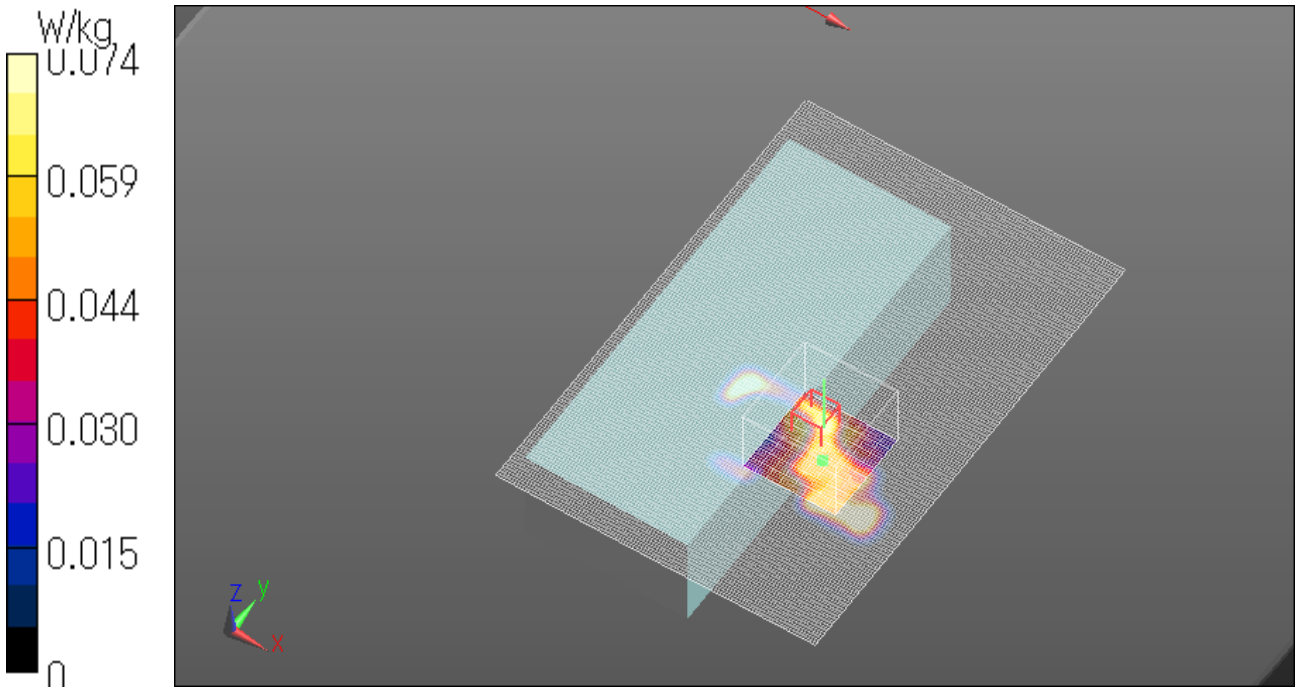

WLAN W5.8 Antenna 2 11ac40 MCS0 5795MHz Left 0mm
Communication System: UID 0, WLAN (0); Communication System Band: 11n40/ac40; Frequency: 5795 MHz; Duty Cycle: 1:1
Medium parameters used (interpolated): f = 5795 MHz; σ = 6.076 S/m; ε_r = 46.839; ρ = 1000 kg/m^3
Phantom section: Flat Section
Measurement Standard: DASY5 (IEEE/IEC/ANSI C63.19-2007)
DASY5 Configuration
Probe: EX3DV4 - SN3922; ConvF(4.08, 4.08, 4.08); Calibrated: 2015/06/17;
Sensor-Surface: 1.4mm (Mechanical Surface Detection)
Electronics: DAE4 Sn1372; Calibrated: 2015/06/15
Phantom: ELI v5.0 TP1207 (30deg probe tilt); Type: QDOVA002AA; Serial: TP:1207
Measurement SW: DASY52, Version 52.8 (8); SEMCAD X Version 14.6.10 (7331)

Area Scan (101x101x1): Interpolated grid: dx=1.000 mm, dy=1.000 mm

Maximum value of SAR (interpolated) = 0.112 W/kg

Zoom Scan (8x8x7)/Cube 0: Measurement grid: dx=4mm, dy=4mm, dz=1.4mm
Reference Value = 3.652 V/m; Power Drift = -0.14 dB
Peak SAR (extrapolated) = 0.244 W/kg
SAR(1 g) = 0.020 W/kg

Maximum value of SAR (measured) = 0.0649 W/kg
Date: 2015/11/30
Ambient Temp. : 24.0 degree.C. Liquid Temp.; 23.5 degree.C.

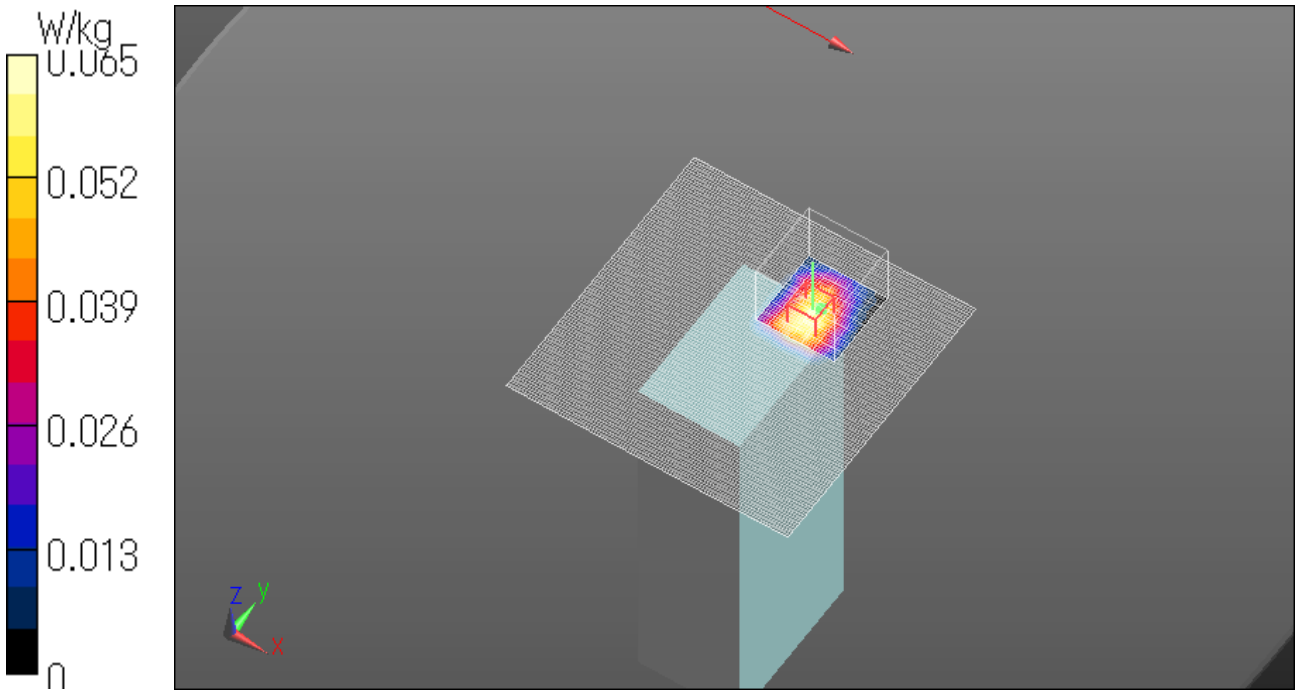

WLAN W5.8 Antenna 2 11ac40 MCS0 5755MHz Front 0mm
Communication System: UID 0, WLAN (0); Communication System Band: 11n40/ac40; Frequency: 5755 MHz; Duty Cycle: 1:1
Medium parameters used (interpolated): f = 5755 MHz; σ = 6.076 S/m; ε_r = 46.836; ρ = 1000 kg/m^3
Phantom section: Flat Section
Measurement Standard: DASY5 (IEEE/IEC/ANSI C63.19-2007)
DASY5 Configuration
Probe: EX3DV4 - SN3922; ConvF(4.08, 4.08, 4.08); Calibrated: 2015/06/17;
Sensor-Surface: 1.4mm (Mechanical Surface Detection)
Electronics: DAE4 Sn1372; Calibrated: 2015/06/15
Phantom: ELI v5.0 TP1207 (30deg probe tilt); Type: QDOVA002AA; Serial: TP:1207
Measurement SW: DASY52, Version 52.8 (8); SEMCAD X Version 14.6.10 (7331)

Area Scan (61x161x1): Interpolated grid: dx=1.000 mm, dy=1.000 mm

Maximum value of SAR (interpolated) = 2.43 W/kg

Zoom Scan (8x8x7)/Cube 0: Measurement grid: dx=4mm, dy=4mm, dz=1.4mm
Reference Value = 22.46 V/m; Power Drift = -0.20 dB
Peak SAR (extrapolated) = 4.16 W/kg
SAR(1 g) = 0.729 W/kg

Maximum value of SAR (measured) = 2.15 W/kg
Date: 2015/11/30
Ambient Temp. : 24.0 degree.C. Liquid Temp.; 23.5 degree.C.

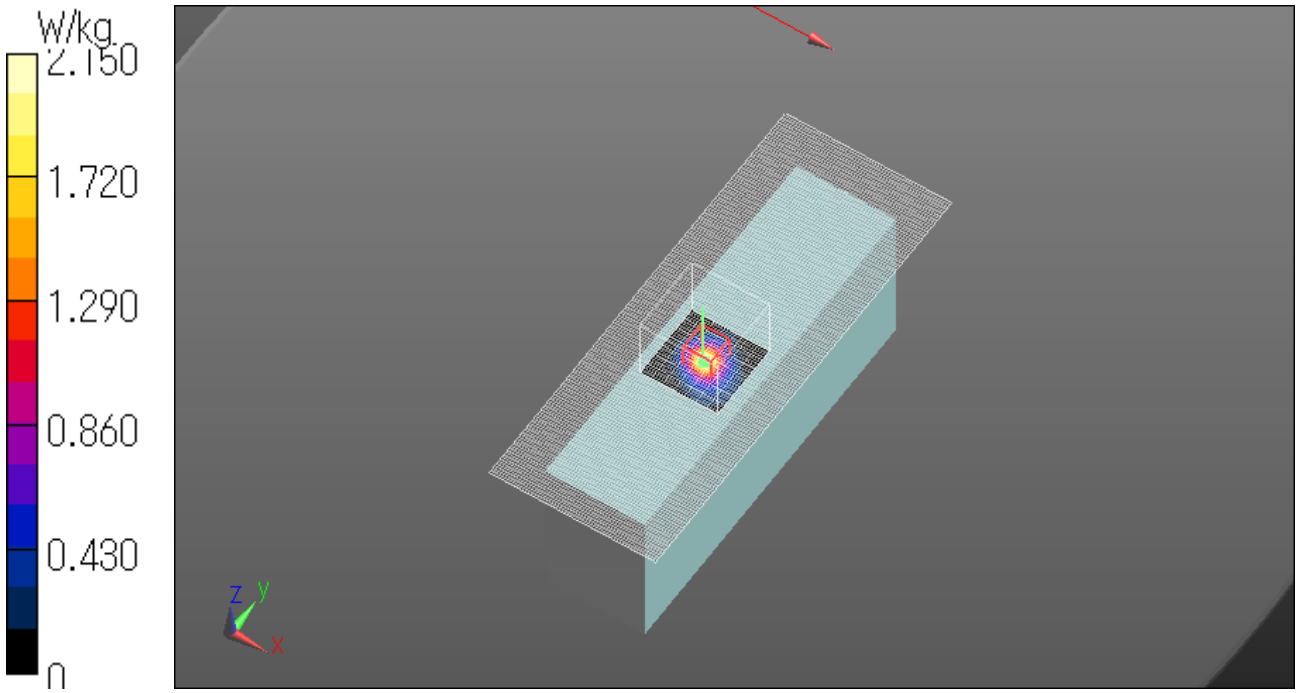

WLAN W5.8 Antenna 2 11ac40 MCS0 5795MHz Front 0mm Repeat
Communication System: UID 0, WLAN (0); Communication System Band: 11n40/ac40; Frequency: 5795 MHz; Duty Cycle: 1:1
Medium parameters used (interpolated): f = 5795 MHz; σ = 6.076 S/m; ε_r = 46.839; ρ = 1000 kg/m^3
Phantom section: Flat Section
Measurement Standard: DASY5 (IEEE/IEC/ANSI C63.19-2007)
DASY5 Configuration
Probe: EX3DV4 - SN3922; ConvF(4.08, 4.08, 4.08); Calibrated: 2015/06/17;
Sensor-Surface: 1.4mm (Mechanical Surface Detection)
Electronics: DAE4 Sn1372; Calibrated: 2015/06/15
Phantom: ELI v5.0 TP1207 (30deg probe tilt); Type: QDOVA002AA; Serial: TP:1207
Measurement SW: DASY52, Version 52.8 (8); SEMCAD X Version 14.6.10 (7331)

Area Scan (61x161x1): Interpolated grid: dx=1.000 mm, dy=1.000 mm

Maximum value of SAR (interpolated) = 3.42 W/kg

Zoom Scan (8x8x7)/Cube 0: Measurement grid: dx=4mm, dy=4mm, dz=1.4mm
Reference Value = 26.28 V/m; Power Drift = 0.01 dB
Peak SAR (extrapolated) = 6.23 W/kg
SAR(1 g) = 1.06 W/kg

Maximum value of SAR (measured) = 3.29 W/kg
Date: 2015/11/30
Ambient Temp. : 24.0 degree.C. Liquid Temp.; 23.5 degree.C.

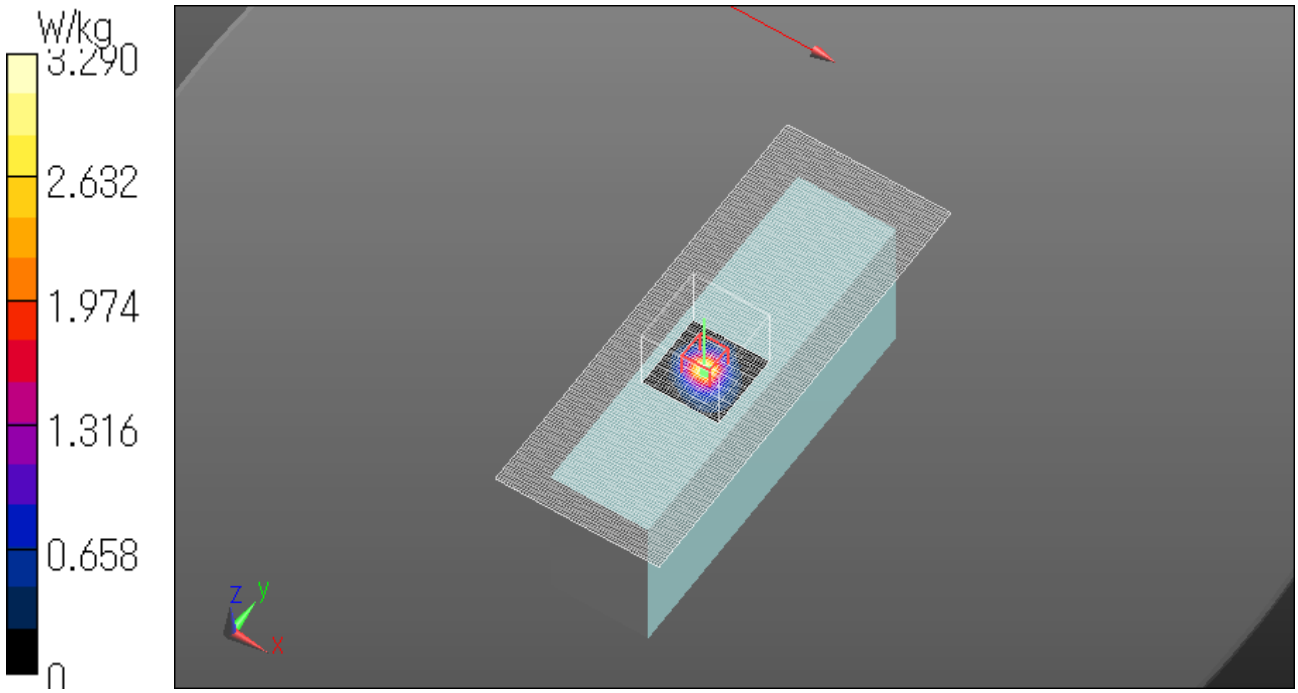

APPENDIX2 : System Check

1. System check result Body 2450MHz

(1) Simulated Tissue Liquid Parameter confirmation

DIELECTRIC PARAMETERS MEASUREMENT RESULTS											
Date	Ambient Temp. [deg.c]	Relative Humidity [%]	Liquid type	Liquid Temp. [deg.c]	Measured Frequency [MHz]	Parameters	Target Value	Measured	Deviation [%]	Limit [%]	Remark
4-Nov	24.0	41	MSL 2450	23.5	2450	εr	52.7	51.4	-2.5	+/-5	*1
						σ [mho/m]	1.95	1.96	0.4	+/-5	

εr: Relative Permittivity / σ : Coductivity
*1 The Target value is a parameter defined in KDB 865664D01.

DIELECTRIC PARAMETERS MEASUREMENT RESULTS											
Date	Ambient Temp. [deg.c]	Relative Humidity [%]	Liquid type	Liquid Temp. [deg.c]	Measured Frequency [MHz]	Parameters	Target Value	Measured	Deviation [%]	Limit [%]	Remark
4-Nov	24.0	41	MSL 2450	23.5	2450	εr	52.2	51.4	-1.6	+/-6	*2 *3
						σ [mho/m]	2.00	1.96	-2.1	+/-6	

εr: Relative Permittivity / σ : Coductivity
*2 The target value is the calibrated dipole Body TSL parameters. (D2450V2 SN:713, Measured Body TSL parameters)
*3 The limit is for deviation provided by manufacture.

(2) System check result (for calibration by manufacture)

SYSTEM CHECK							
Date	Frequency [MHz]	SAR 1g [W/kg]			Deviation [%]	Limit [%]	Remark
		Forward Power Measured	Conversion 1W Calculation	Target Value(1W)			
4-Nov	2450.00	12.80	51.20	50.40	1.6	+/-10	*4

*4 The taget value is the parameter defined in SAR measured x4(12.6 x 4 = 50.4) in manufacturer calibrated dipole (D2450V2 SN:713)
Please refer to " SAR result with Body TSL of Appendix 2 System Check Dipole (D2450V2 SN:713)".

Body 2450MHz System Check DATA/ D2450V2/ Forward Conducted Power: 250mW
Communication System: UID 0, CW (0); Communication System Band: D2450 (2450.0 MHz); Frequency: 2450 MHz; Duty Cycle: 1:1
Medium parameters used: f = 2450 MHz; σ = 1.958 S/m; ε_r = 51.378; ρ = 1000 kg/m^3
Phantom section: Flat Section
Measurement Standard: DASY5 (IEEE/IEC/ANSI C63.19-2007)
DASY5 Configuration
Probe: EX3DV4 - SN3922; ConvF(7.49, 7.49, 7.49); Calibrated: 2015/06/17;
Sensor-Surface: 2mm (Mechanical Surface Detection)
Electronics: DAE4 Sn1372; Calibrated: 2015/06/15
Phantom: ELI v5.0 TP1207; Type: QDOVA001BB; Serial: TP:1207
Measurement SW: DASY52, Version 52.8 (8); SEMCAD X Version 14.6.10 (7331)

Area Scan (71x71x1): Interpolated grid: dx=1.200 mm, dy=1.200 mm
Maximum value of SAR (interpolated) = 19.5 W/kg

Zoom Scan (7x7x7)/Cube 0: Measurement grid: dx=5mm, dy=5mm, dz=5mm
Reference Value = 109.6 V/m; Power Drift = -0.01 dB
Peak SAR (extrapolated) = 27.3 W/kg
SAR(1 g) = 12.8 W/kg; SAR(10 g) = 5.8 W/kg
Maximum value of SAR (measured) = 19.9 W/kg

Date: 2015/11/04
Ambient Temp. : 24.0 degree.C. Liquid Temp.; 23.5 degree.C.

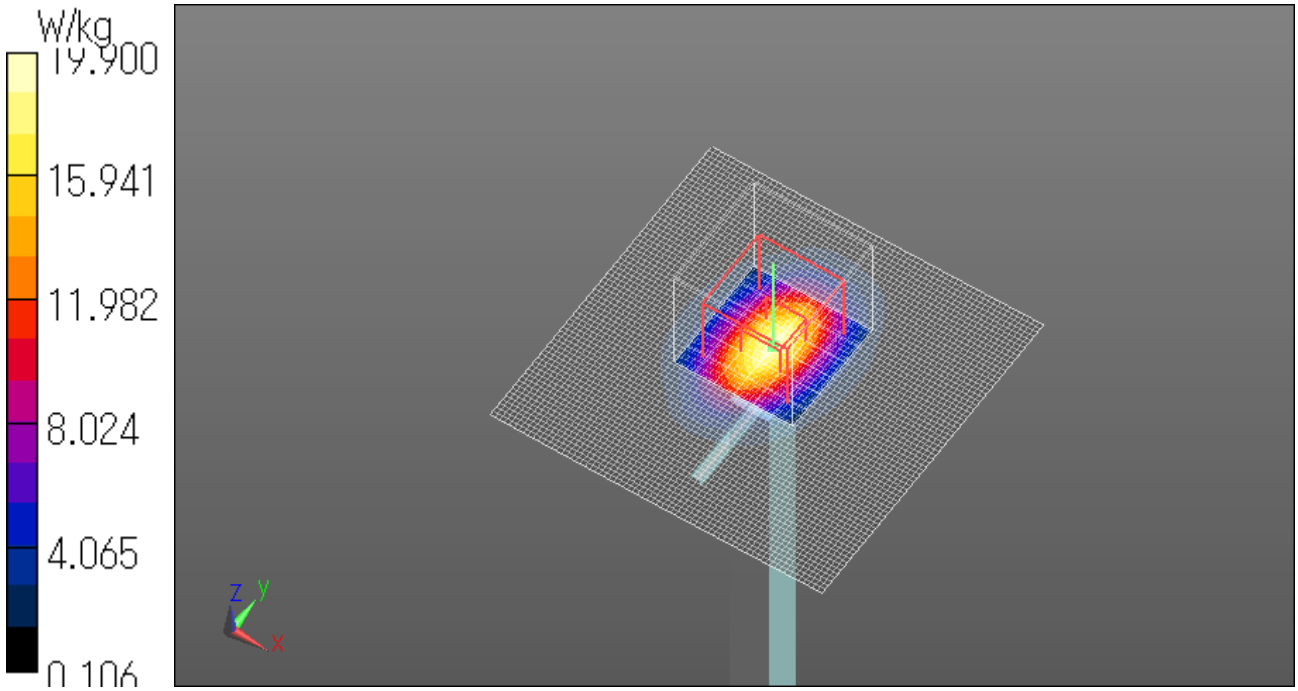

Body 2450MHz System Check DATA/ D2450V2/ Forward Conducted Power: 250mW
Communication System: UID 0, CW (0); Communication System Band: D2450 (2450.0 MHz); Frequency: 2450 MHz; Duty Cycle: 1:1
Medium parameters used: f = 2450 MHz; σ = 1.958 S/m; ε_r = 51.378; ρ = 1000 kg/m^3
Phantom section: Flat Section
Measurement Standard: DASY5 (IEEE/IEC/ANSI C63.19-2007)
DASY5 Configuration
Probe: EX3DV4 - SN3922; ConvF(7.49, 7.49, 7.49); Calibrated: 2015/06/17;
Sensor-Surface: 0mm (Fix Surface)
Electronics: DAE4 Sn1372; Calibrated: 2015/06/15
Phantom: ELI v5.0 TP1207; Type: QDOVA001BB; Serial: TP:1207
Measurement SW: DASY52, Version 52.8 (8); SEMCAD X Version 14.6.10 (7331)

Z Scan (1x1x31): Measurement grid: dx=20mm, dy=20mm, dz=5mm
Maximum value of SAR (measured) = 19.4 W/kg

Date: 2015/11/04
Ambient Temp. : 24.0 degree.C. Liquid Temp.; 23.5 degree.C.

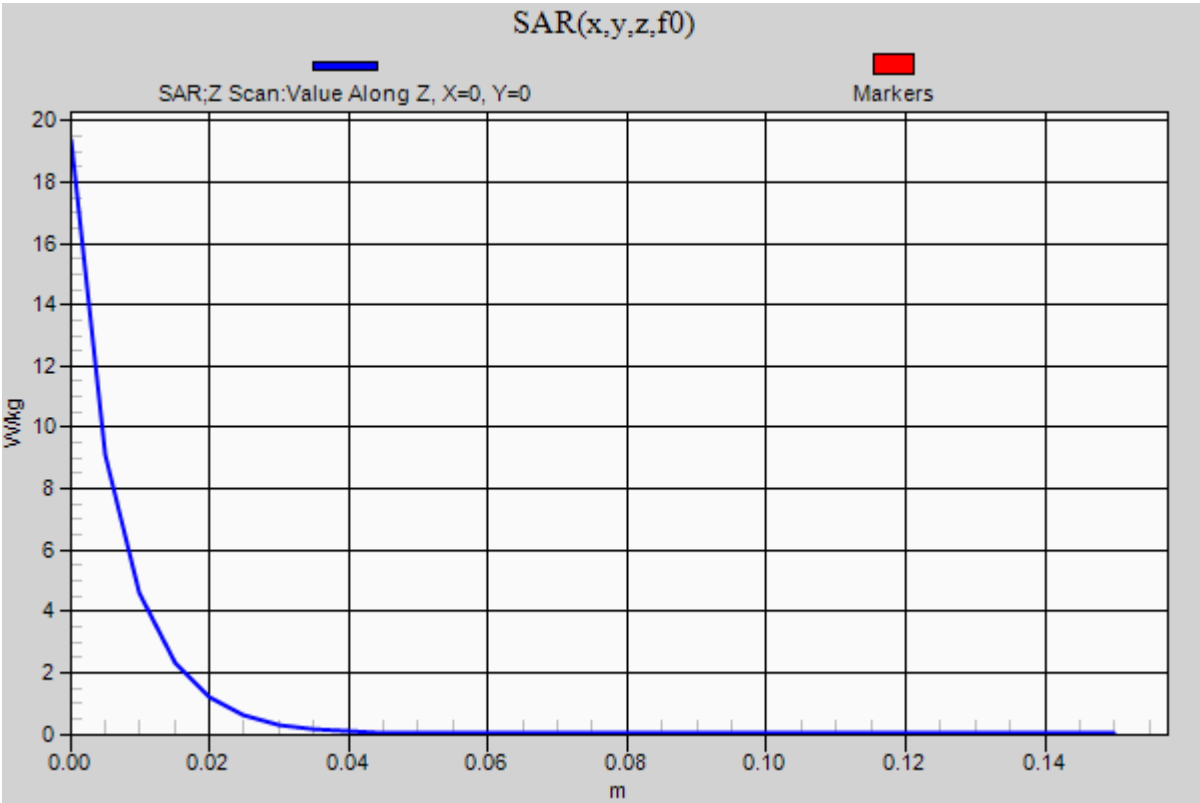

2. System Check Dipole (D2450V2,S/N:713)

Calibration Laboratory of
Schmid & Partner
Engineering AG
Zeughausstrasse 43, 8004 Zurich, Switzerland

S Schweizerischer Kalibrierdienst
C Service suisse d'étalonnage
Servizio svizzero di taratura
S Swiss Calibration Service

Accredited by the Swiss Accreditation Service (SAS)
The Swiss Accreditation Service is one of the signatories to the EA Multilateral Agreement for the recognition of calibration certificates

Accreditation No.: SCS 108

Client **UL Japan (PTT)**

Certificate No: D2450V2-713_Sep13

CALIBRATION CERTIFICATE

Object	D2450V2 - SN: 713
Calibration procedure(s)	QA CAL-05.v9 Calibration procedure for dipole validation kits above 700 MHz
Calibration date:	September 10, 2013

This calibration certificate documents the traceability to national standards, which realize the physical units of measurements (SI).
The measurements and the uncertainties with confidence probability are given on the following pages and are part of the certificate.

All calibrations have been conducted in the closed laboratory facility: environment temperature (22 ± 3)°C and humidity < 70%.

Calibration Equipment used (M&TE critical for calibration)

Primary Standards	ID #	Cal Date (Certificate No.)	Scheduled Calibration
Power meter EPM-442A	GB37480704	01-Nov-12 (No. 217-01640)	Oct-13
Power sensor HP 8481A	US37292783	01-Nov-12 (No. 217-01640)	Oct-13
Reference 20 dB Attenuator	SN: 5058 (20k)	04-Apr-13 (No. 217-01736)	Apr-14
Type-N mismatch combination	SN: 5047.3 / 06327	04-Apr-13 (No. 217-01739)	Apr-14
Reference Probe ES3DV3	SN: 3205	28-Dec-12 (No. ES3-3205_Dec12)	Dec-13
DAE4	SN: 601	25-Apr-13 (No. DAE4-601_Apr13)	Apr-14

Secondary Standards	ID #	Check Date (in house)	Scheduled Check
Power sensor HP 8481A	MY41092317	18-Oct-02 (in house check Oct-11)	In house check: Oct-13
RF generator R&S SMT-06	100005	04-Aug-99 (in house check Oct-11)	In house check: Oct-13
Network Analyzer HP 8753E	US37390585 S4206	18-Oct-01 (in house check Oct-12)	In house check: Oct-13

	Name	Function	Signature
Calibrated by:	Israe El-Naouq	Laboratory Technician	Israe El-Naouq
Approved by:	Katja Pokovic	Technical Manager	

Issued: September 10, 2013

This calibration certificate shall not be reproduced except in full without written approval of the laboratory.

Calibration Laboratory of
Schmid & Partner
Engineering AG
Zeughausstrasse 43, 8004 Zurich, Switzerland

S Schweizerischer Kalibrierdienst
C Service suisse d'étalonnage
Servizio svizzero di taratura
S Swiss Calibration Service

Accredited by the Swiss Accreditation Service (SAS)
The Swiss Accreditation Service is one of the signatories to the EA Multilateral Agreement for the recognition of calibration certificates

Accreditation No.: **SCS 108**

Glossary:

TSL	tissue simulating liquid
ConvF	sensitivity in TSL / NORM x,y,z
N/A	not applicable or not measured

Calibration is Performed According to the Following Standards:

a) IEEE Std 1528-2003, "IEEE Recommended Practice for Determining the Peak Spatial-Averaged Specific Absorption Rate (SAR) in the Human Head from Wireless Communications Devices: Measurement Techniques", December 2003
b) IEC 62209-1, "Procedure to measure the Specific Absorption Rate (SAR) for hand-held devices used in close proximity to the ear (frequency range of 300 MHz to 3 GHz)", February 2005
c) KDB 865664, "SAR Measurement Requirements for 100 MHz to 6 GHz"

Additional Documentation:

d) DASY4/5 System Handbook

Methods Applied and Interpretation of Parameters:

- *Measurement Conditions:* Further details are available from the Validation Report at the end of the certificate. All figures stated in the certificate are valid at the frequency indicated.
- *Antenna Parameters with TSL:* The dipole is mounted with the spacer to position its feed point exactly below the center marking of the flat phantom section, with the arms oriented parallel to the body axis.
- *Feed Point Impedance and Return Loss:* These parameters are measured with the dipole positioned under the liquid filled phantom. The impedance stated is transformed from the measurement at the SMA connector to the feed point. The Return Loss ensures low reflected power. No uncertainty required.
- *Electrical Delay:* One-way delay between the SMA connector and the antenna feed point. No uncertainty required.
- *SAR measured:* SAR measured at the stated antenna input power.
- *SAR normalized:* SAR as measured, normalized to an input power of 1 W at the antenna connector.
- *SAR for nominal TSL parameters:* The measured TSL parameters are used to calculate the nominal SAR result.

The reported uncertainty of measurement is stated as the standard uncertainty of measurement multiplied by the coverage factor k=2, which for a normal distribution corresponds to a coverage probability of approximately 95%.

Measurement Conditions

DASY system configuration, as far as not given on page 1.

DASY Version	DASY5	V52.8.7
Extrapolation	Advanced Extrapolation	
Phantom	Modular Flat Phantom	
Distance Dipole Center - TSL	10 mm	with Spacer
Zoom Scan Resolution	dx, dy, dz = 5 mm	
Frequency	2450 MHz ± 1 MHz	

Head TSL parameters

The following parameters and calculations were applied.

	Temperature	Permittivity	Conductivity
Nominal Head TSL parameters	22.0 °C	39.2	1.80 mho/m
Measured Head TSL parameters	(22.0 ± 0.2) °C	39.4 ± 6 %	1.83 mho/m ± 6 %
Head TSL temperature change during test	< 0.5 °C	----	----

SAR result with Head TSL

SAR averaged over 1 cm^3 (1 g) of Head TSL	Condition	
SAR measured	250 mW input power	13.0 W/kg
SAR for nominal Head TSL parameters	normalized to 1W	**51.6 W/kg ± 17.0 % (k=2)**

SAR averaged over 10 cm^3 (10 g) of Head TSL	condition	
SAR measured	250 mW input power	6.05 W/kg
SAR for nominal Head TSL parameters	normalized to 1W	**24.1 W/kg ± 16.5 % (k=2)**

Body TSL parameters

The following parameters and calculations were applied.

	Temperature	Permittivity	Conductivity
Nominal Body TSL parameters	22.0 °C	52.7	1.95 mho/m
Measured Body TSL parameters	(22.0 ± 0.2) °C	52.2 ± 6 %	2.00 mho/m ± 6 %
Body TSL temperature change during test	< 0.5 °C	----	----

SAR result with Body TSL

SAR averaged over 1 cm^3 (1 g) of Body TSL	Condition	
SAR measured	250 mW input power	12.6 W/kg
SAR for nominal Body TSL parameters	normalized to 1W	**49.7 W/kg ± 17.0 % (k=2)**

SAR averaged over 10 cm^3 (10 g) of Body TSL	condition	
SAR measured	250 mW input power	5.89 W/kg
SAR for nominal Body TSL parameters	normalized to 1W	**23.4 W/kg ± 16.5 % (k=2)**

UL Japan, Inc.
Ise EMC Lab.
4383-326 Asama-cho, Ise-shi, Mie-ken 516-0021 JAPAN
Telephone: +81 596 24 8999
Facsimile: +81 596 24 8124

Appendix

Antenna Parameters with Head TSL

Impedance, transformed to feed point	51.8 Ω + 0.7 jΩ
Return Loss	- 34.4 dB

Antenna Parameters with Body TSL

Impedance, transformed to feed point	48.7 Ω + 2.8 jΩ
Return Loss	- 30.0 dB

General Antenna Parameters and Design

Electrical Delay (one direction)	1.162 ns

After long term use with 100W radiated power, only a slight warming of the dipole near the feedpoint can be measured.

The dipole is made of standard semirigid coaxial cable. The center conductor of the feeding line is directly connected to the second arm of the dipole. The antenna is therefore short-circuited for DC-signals. On some of the dipoles, small end caps are added to the dipole arms in order to improve matching when loaded according to the position as explained in the "Measurement Conditions" paragraph. The SAR data are not affected by this change. The overall dipole length is still according to the Standard.
No excessive force must be applied to the dipole arms, because they might bend or the soldered connections near the feedpoint may be damaged.

Additional EUT Data

Manufactured by	SPEAG
Manufactured on	July 05, 2002

DASY5 Validation Report for Head TSL

Date: 10.09.2013

Test Laboratory: SPEAG, Zurich, Switzerland

DUT: Dipole 2450 MHz; Type: D2450V2; Serial: D2450V2 - SN: 713

Communication System: UID 0 - CW; Frequency: 2450 MHz
Medium parameters used: f = 2450 MHz; σ = 1.83 S/m; ε_r = 39.4; ρ = 1000 kg/m^3
Phantom section: Flat Section
Measurement Standard: DASY5 (IEEE/IEC/ANSI C63.19-2007)

DASY52 Configuration:

- Probe: ES3DV3 - SN3205; ConvF(4.52, 4.52, 4.52); Calibrated: 28.12.2012;
- Sensor-Surface: 3mm (Mechanical Surface Detection)
- Electronics: DAE4 Sn601; Calibrated: 25.04.2013
- Phantom: Flat Phantom 5.0 (front); Type: QD000P50AA; Serial: 1001
- DASY52 52.8.7(1137); SEMCAD X 14.6.10(7164)

Dipole Calibration for Head Tissue/Pin=250 mW, d=10mm/Zoom Scan (7x7x7)/Cube 0:

Measurement grid: dx=5mm, dy=5mm, dz=5mm
Reference Value = 94.095 V/m; Power Drift = 0.04 dB
Peak SAR (extrapolated) = 26.7 W/kg
SAR(1 g) = 13 W/kg; SAR(10 g) = 6.05 W/kg
Maximum value of SAR (measured) = 17.0 W/kg

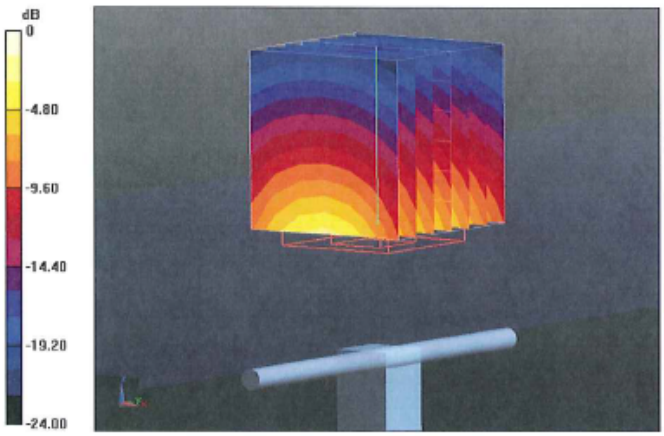

0 dB = 17.0 W/kg = 12.30 dBW/kg

Impedance Measurement Plot for Head TSL

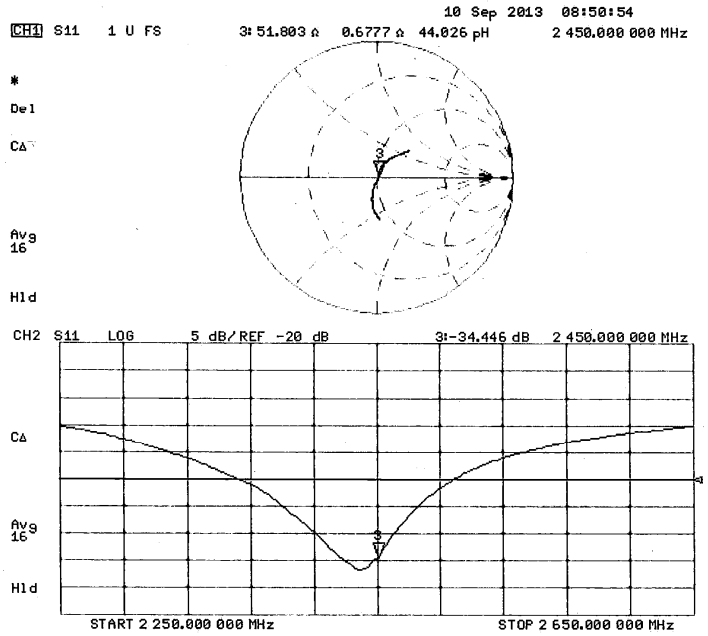

UL Japan, Inc.
Ise EMC Lab.
4383-326 Asama-cho, Ise-shi, Mie-ken 516-0021 JAPAN
Telephone: +81 596 24 8999
Facsimile: +81 596 24 8124

DASY5 Validation Report for Body TSL

Date: 10.09.2013

Test Laboratory: SPEAG, Zurich, Switzerland

DUT: Dipole 2450 MHz; Type: D2450V2; Serial: D2450V2 - SN: 713

Communication System: UID 0 - CW; Frequency: 2450 MHz
Medium parameters used: f = 2450 MHz; σ = 2 S/m; ε_r = 52.2; ρ = 1000 kg/m^3
Phantom section: Flat Section
Measurement Standard: DASY5 (IEEE/IEC/ANSI C63.19-2007)

DASY52 Configuration:

- Probe: ES3DV3 - SN3205; ConvF(4.42, 4.42, 4.42); Calibrated: 28.12.2012;
- Sensor-Surface: 3mm (Mechanical Surface Detection)
- Electronics: DAE4 Sn601; Calibrated: 25.04.2013
- Phantom: Flat Phantom 5.0 (back); Type: QD000P50AA; Serial: 1002
- DASY52 52.8.7(1137); SEMCAD X 14.6.10(7164)

Dipole Calibration for Body Tissue/Pin=250 mW, d=10mm/Zoom Scan (7x7x7)/Cube 0:
Measurement grid: dx=5mm, dy=5mm, dz=5mm
Reference Value = 94.095 V/m; Power Drift = 0.03 dB
Peak SAR (extrapolated) = 26.1 W/kg
SAR(1 g) = 12.6 W/kg; SAR(10 g) = 5.89 W/kg
Maximum value of SAR (measured) = 16.7 W/kg

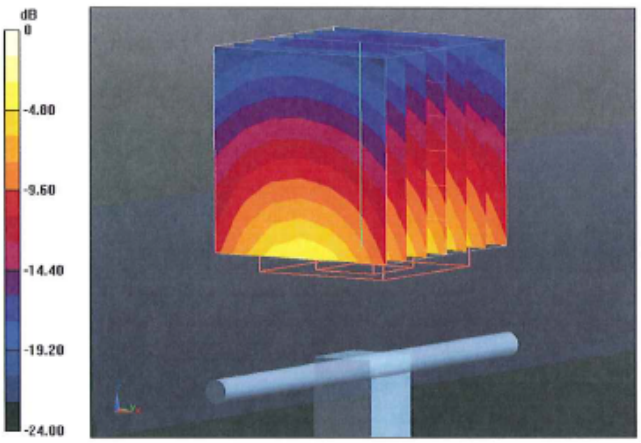

0 dB = 16.7 W/kg = 12.23 dBW/kg

Impedance Measurement Plot for Body TSL

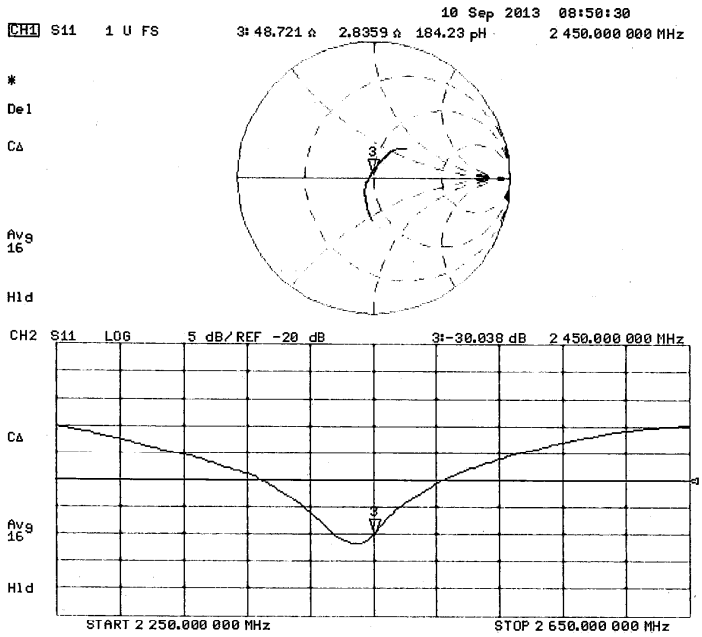

UL Japan, Inc.
Ise EMC Lab.
4383-326 Asama-cho, Ise-shi, Mie-ken 516-0021 JAPAN
Telephone: +81 596 24 8999
Facsimile: +81 596 24 8124

D2450V2 Calibration for Impedance and Return-loss

1. Test environment

Date	July 21, 2015		
Ambient Temperature	24.0 deg.C	Relative humidity	50%RH

2. Equipment used

Control No.	Instrument	Manufacturer	Model No	Serial No	Test Item	Calibration Date * Interval(month)
EST-54	Network Analyzer	Hewlett Packard	8753ES	US39171615	SAR	2015/05/05 * 12
EST-08	Calibration Kit	Agilent	85032B	3217A12903	SAR	2015/05/04 * 12
MPF-04	2mm Oval Flat Phantom	Schmid&Partner Engineering AG	QDOVA001BB	1207	SAR	2015/05/11 * 12
MPSAM-04	SAM Phantom	Schmid&Partner Engineering AG	QD000P40CD	1762	SAR	2015/05/11 * 12
MOS-38	Digital thermometer	HANNA	Checktemp 4	-	SAR	2015/04/28 * 12
MOS-31	Thermo-Hygrometer	Custom	CTH-201	3101	SAR	2015/07/07 * 12
HSL2450						Daily check
MSL2450						Daily check
SAR room1						Daily check

3. Test Result

Impeadance,Transformed to feed point	Head	Deviation	Tolerance	Result
Calibration (SPEAG) 2013/09/10	51.8 Ω+0.7jΩ	-	-	-
Calibration(ULJ)2015/7/21	50.94Ω+0.86jΩ	-0.9Ω+0.2jΩ	+/-5Ω+/-5jΩ	Complied

Return loss	Head	Deviation	Tolerance	Result
Calibration (SPEAG) 2013/09/10	-34.4dB	-	-	-
Calibration(ULJ)2015/7/21	-37.97dB	-3.5dB	-34.4 *+/-20%	Complied

Impeadance,Transformed to feed point	Body	Deviation	Tolerance	Result
Calibration (SPEAG) 2013/09/10	48.7Ω+2.8jΩ	-	-	-
Calibration(ULJ)2015/7/21	50.53Ω+2.48jΩ	+1.8Ω+/-0.3jΩ	+/-5Ω+/-5jΩ	Complied

Return loss	Body	Deviation	Tolerance	Result
Calibration (SPEAG) 2013/09/10	-30.0dB	-	-	-
Calibration(ULJ)2015/7/21	-31.95dB	-1.95dB	-30.0 *+/-20%	Complied

*Tolerance : According to the KDB450824D02

Measurement Plots

<Head Liquid>

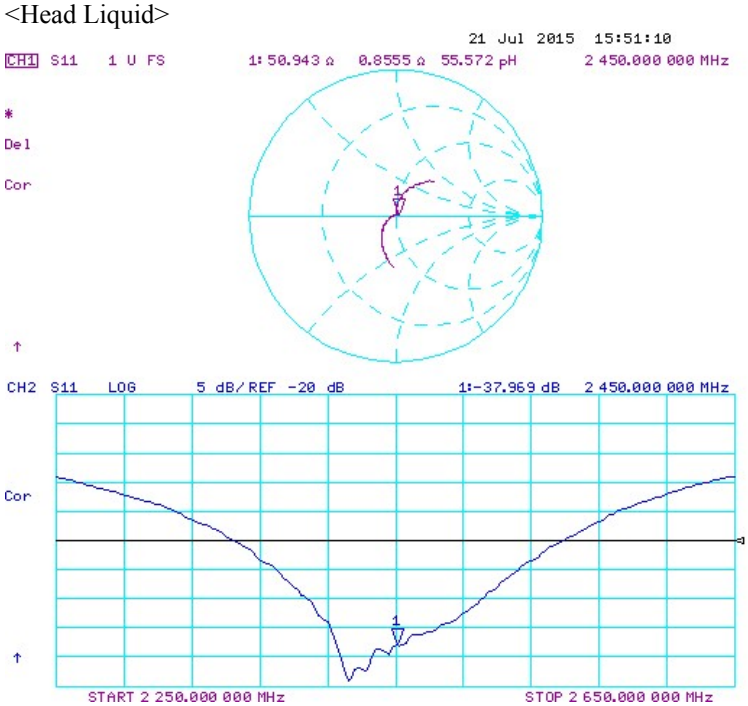

<Body Liquid>

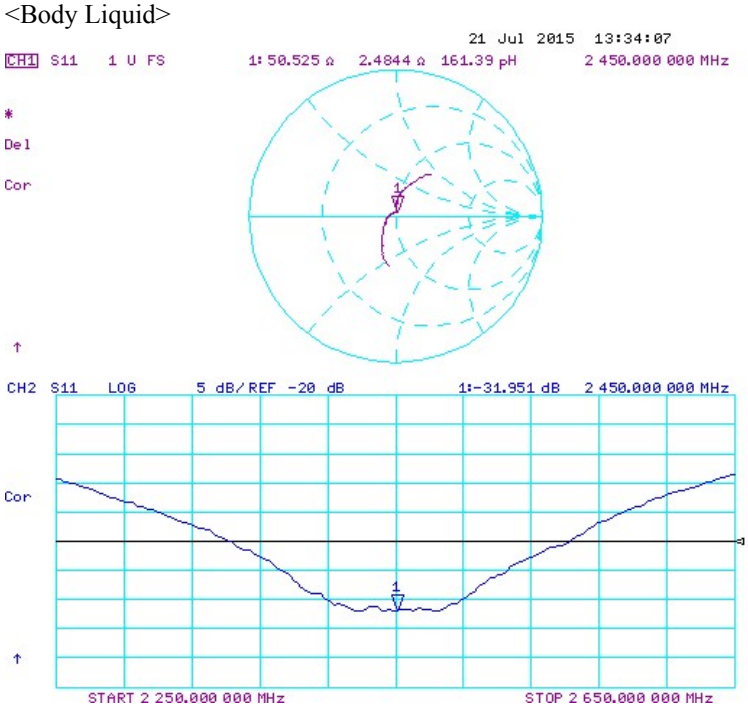

3. System check result Body 5250MHz

(1) Simulated Tissue Liquid Parameter confirmation

DIELECTRIC PARAMETERS MEASUREMENT RESULTS											
Date	Ambient Temp. [deg.c]	Relative Humidity [%]	Liquid type	Liquid Temp. [deg.c]	Measured Frequency [MHz]	Parameters	Target Value	Measured	Deviation [%]	Limit [%]	Remark
-	-	-	-	-	3000	εr	52.0	-	-	-	*1
						σ [mho/m]	2.73	-	-	-	
26-Nov	24.0	55	MBBL 3.5-5.8	23.5	5250	εr	49.0	47.3	-3.4	+/-5	*2
						σ [mho/m]	5.36	5.48	2.2	+/-5	
30-Nov	24.0	55	MBBL 3.5-5.8	23.5	5250	εr	49.0	47.6	-2.7	+/-5	*2
						σ [mho/m]	5.36	5.44	1.5	+/-5	
-	-	-	-	-	5800	εr	48.2	-	-	-	*1
						σ [mho/m]	6.00	-	-	-	

εr: Relative Permittivity / σ : Coductivity
*1 The Target value is a parameter defined in KDB 865664D01.
*2 The dielectric parameters should be linearly interpolated between the closest pair of target frequencies to determine the applicable dielectric parameters corresponding to the device test frequency.

DIELECTRIC PARAMETERS MEASUREMENT RESULTS											
Date	Ambient Temp. [deg.c]	Relative Humidity [%]	Liquid type	Liquid Temp. [deg.c]	Measured Frequency [MHz]	Parameters	Target Value	Measured	Deviation [%]	Limit [%]	Remark
26-Nov	24.0	55	MBBL 3.5-5.8	23.5	5250	εr	49.3	47.3	-4.1	+/-6	*3*4
						σ [mho/m]	5.48	5.48	-0.1	+/-6	
30-Nov	24.0	55	MBBL 3.5-5.8	23.5	5250	εr	49.3	47.6	-3.4	+/-6	*3*4
						σ [mho/m]	5.48	5.44	-0.7	+/-6	

εr: Relative Permittivity / σ : Coductivity
*3 The target value is the calibrated dipole Body TSL parameters. (D5GHzV2 SN:1020, Measured Body TSL parameters)
*4 The limit is for deviation provided by manufacture.

(2) System check result (for calibration by manufacture)

SYSTEM CHECK							
Date	Frequency [MHz]	SAR 1g [W/kg]		Target Value(1W)	Deviation [%]	Limit [%]	Remark
		Forward Power Measured	Conversion 1W Calculation				
26-Nov	5250.00	8.07	80.70	73.80	9.3	+/-10	*5
30-Nov	5250.00	7.96	79.60	73.80	7.9	+/-10	*5

*5 The taget value is the parameter defined in SAR measured x 10(7.38 x 10 = 73.8) in manufacturer calibrated dipole (D5GHzV2 SN:1020)

Body 5250MHz System Check Data / D5GHzV2 / Forward Conducted Power: 100mW
Communication System: UID 0, CW (0); Communication System Band: D5GHz (5000.0 - 6000.0 MHz); Frequency: 5250 MHz; Duty Cycle: 1:1
Medium parameters used: f = 5250 MHz; σ = 5.477 S/m; ε_r = 47.282; ρ = 1000 kg/m^3
Phantom section: Flat Section
Measurement Standard: DASY5 (IEEE/IEC/ANSI C63.19-2007)
DASY5 Configuration
Probe: EX3DV4 - SN3922; ConvF(4.46, 4.46, 4.46); Calibrated: 2015/06/17;
Sensor-Surface: 1.4mm (Mechanical Surface Detection)
Electronics: DAE4 Sn1372; Calibrated: 2015/06/15
Phantom: ELI v5.0 TP1207 (30deg probe tilt); Type: QDOVA002AA; Serial: TP:1207
Measurement SW: DASY52, Version 52.8 (8); SEMCAD X Version 14.6.10 (7331)

Area Scan (61x61x1): Interpolated grid: dx=1.000 mm, dy=1.000 mm
Maximum value of SAR (interpolated) = 19.3 W/kg

Zoom Scan (8x8x7)/Cube 0: Measurement grid: dx=4mm, dy=4mm, dz=1.4mm
Reference Value = 57.75 V/m; Power Drift = 0.00 dB
Peak SAR (extrapolated) = 34.3 W/kg
SAR(1 g) = 8.07 W/kg; SAR(10 g) = 2.27 W/kg
Maximum value of SAR (measured) = 19.8 W/kg

Date: 2015/11/26
Ambient Temp. : 24.0 degree.C. Liquid Temp.; 23.5 degree.C.

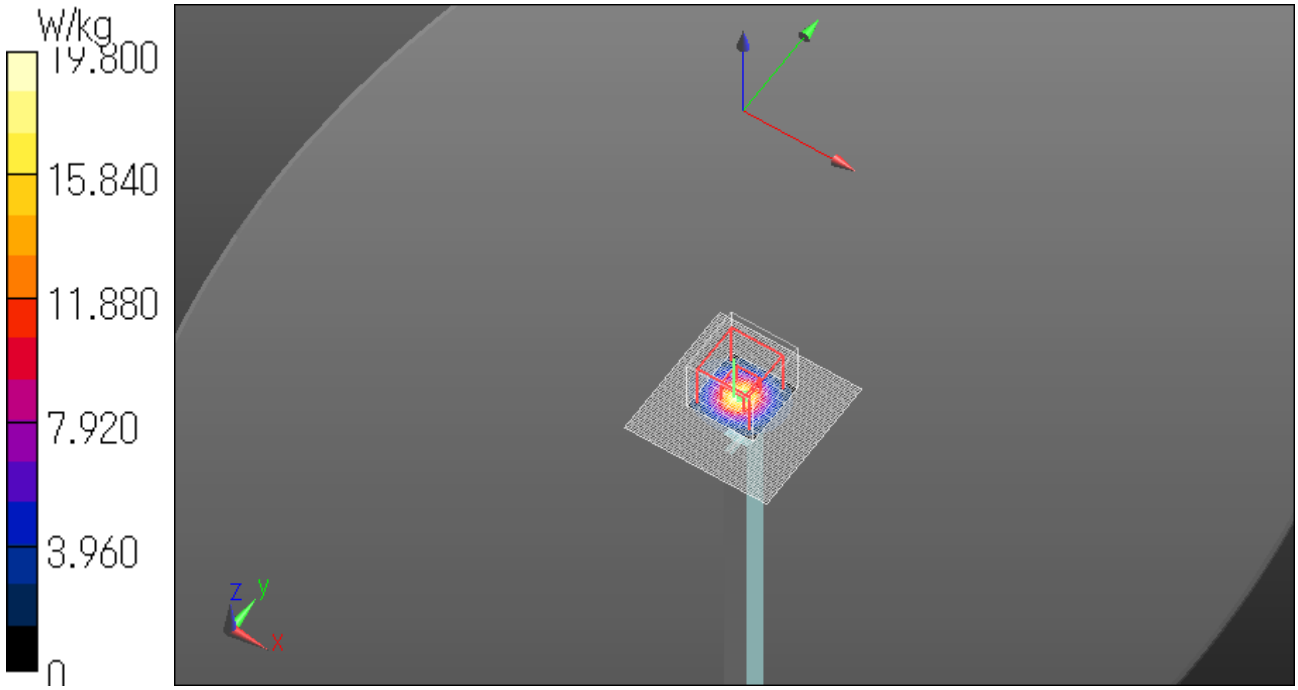

Body 5250MHz System Check Data / D5GHzV2 / Forward Conducted Power: 100mW
Communication System: UID 0, CW (0); Communication System Band: D5GHz (5000.0 - 6000.0 MHz); Frequency: 5250 MHz; Duty Cycle: 1:1
Medium parameters used: f = 5250 MHz; σ = 5.477 S/m; ε_r = 47.282; ρ = 1000 kg/m^3
Phantom section: Flat Section
Measurement Standard: DASY5 (IEEE/IEC/ANSI C63.19-2007)
DASY5 Configuration
Probe: EX3DV4 - SN3922; ConvF(4.46, 4.46, 4.46); Calibrated: 2015/06/17;
Sensor-Surface: 0mm (Fix Surface)
Electronics: DAE4 Sn1372; Calibrated: 2015/06/15
Phantom: ELI v5.0 TP1207 (30deg probe tilt); Type: QDOVA002AA; Serial: TP:1207
Measurement SW: DASY52, Version 52.8 (8); SEMCAD X Version 14.6.10 (7331)

Z Scan (1x1x31): Measurement grid: dx=20mm, dy=20mm, dz=5mm
Maximum value of SAR (measured) = 13.5 W/kg

Date: 2015/11/26
Ambient Temp. : 24.0 degree.C. Liquid Temp.; 23.5 degree.C.

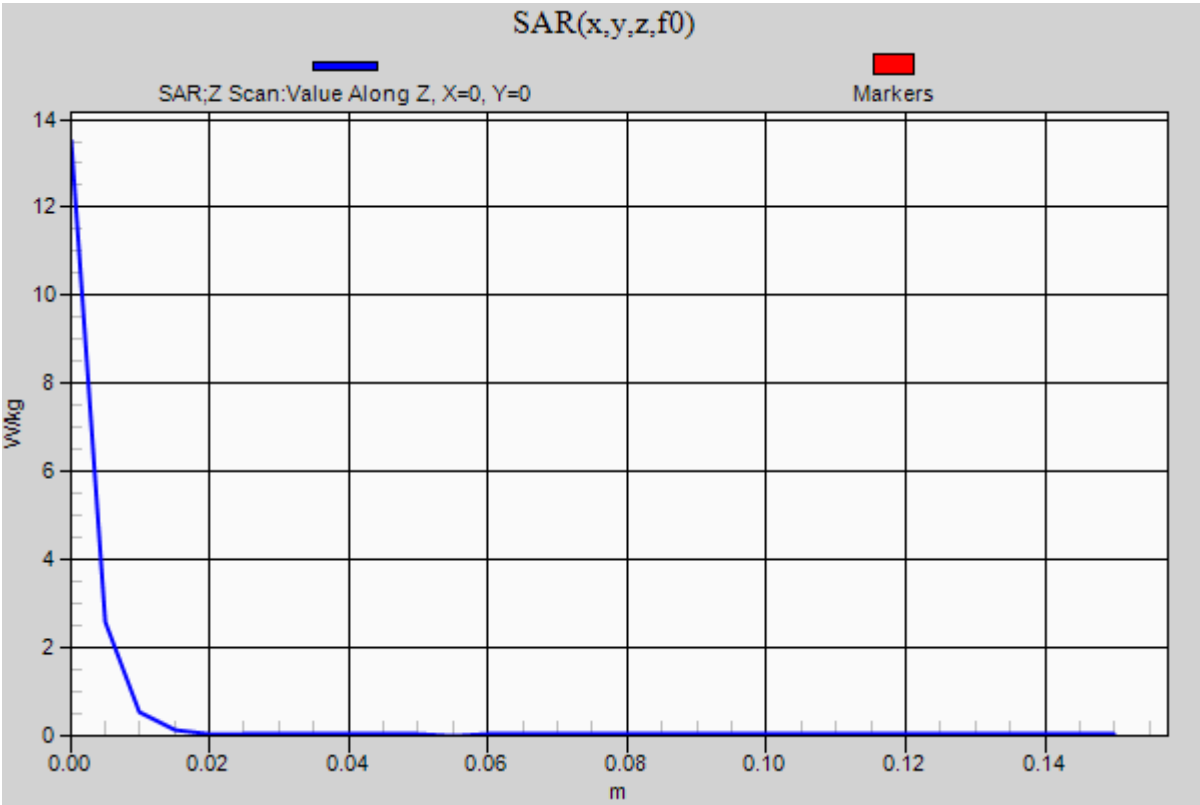

Body 5250MHz System Check Data / D5GHzV2 / Forward Conducted Power: 100mW
Communication System: UID 0, CW (0); Communication System Band: D5GHz (5000.0 - 6000.0 MHz); Frequency: 5250 MHz; Duty Cycle: 1:1
Medium parameters used: f = 5250 MHz; σ = 5.44 S/m; ε_r = 47.643; ρ = 1000 kg/m^3
Phantom section: Flat Section
Measurement Standard: DASY5 (IEEE/IEC/ANSI C63.19-2007)
DASY5 Configuration
Probe: EX3DV4 - SN3922; ConvF(4.46, 4.46, 4.46); Calibrated: 2015/06/17;
Sensor-Surface: 1.4mm (Mechanical Surface Detection)
Electronics: DAE4 Sn1372; Calibrated: 2015/06/15
Phantom: ELI v5.0 TP1207 (30deg probe tilt); Type: QDOVA002AA; Serial: TP:1207
Measurement SW: DASY52, Version 52.8 (8); SEMCAD X Version 14.6.10 (7331)

Area Scan (61x61x1): Interpolated grid: dx=1.000 mm, dy=1.000 mm
Maximum value of SAR (interpolated) = 19.4 W/kg

Zoom Scan (8x8x7)/Cube 0: Measurement grid: dx=4mm, dy=4mm, dz=1.4mm
Reference Value = 52.14 V/m; Power Drift = 0.02 dB
Peak SAR (extrapolated) = 34.0 W/kg
SAR(1 g) = 7.96 W/kg; SAR(10 g) = 2.22 W/kg
Maximum value of SAR (measured) = 18.8 W/kg

Date: 2015/11/28
Ambient Temp. : 24.0 degree.C. Liquid Temp.; 23.5 degree.C.

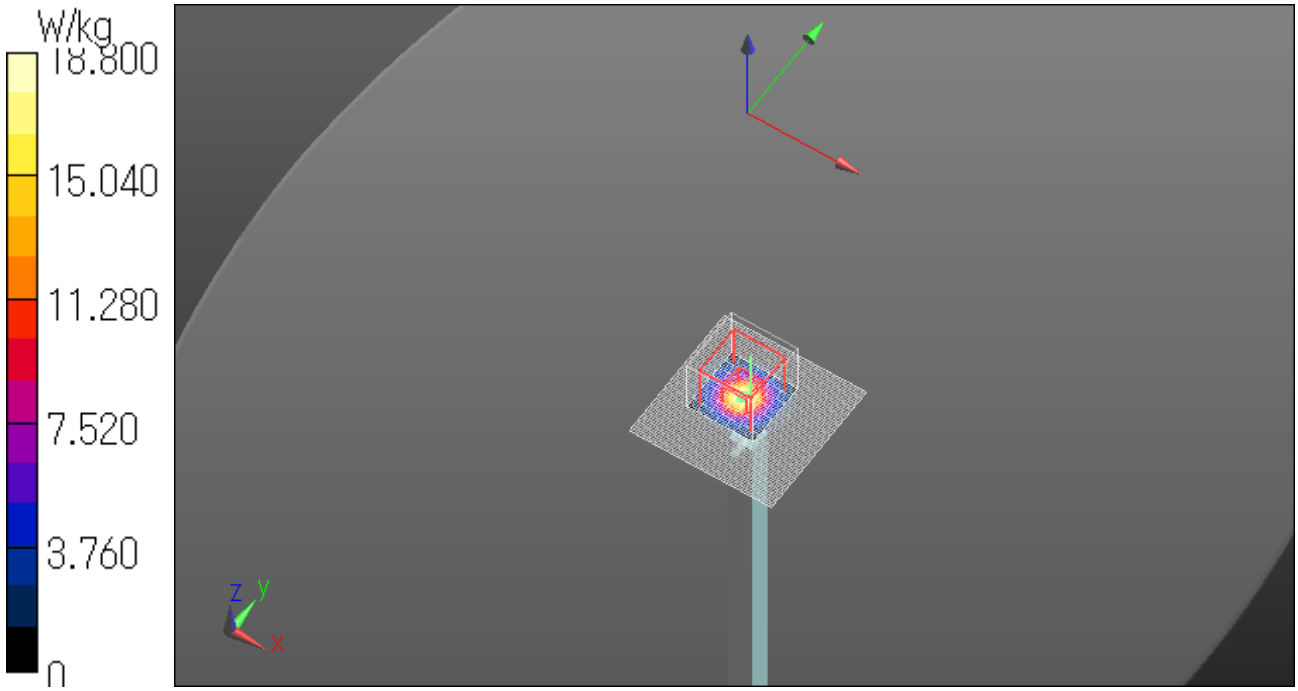

Body 5250MHz System Check Data / D5GHzV2 / Forward Conducted Power: 100mW
Communication System: UID 0, CW (0); Communication System Band: D5GHz (5000.0 - 6000.0 MHz); Frequency: 5250 MHz; Duty Cycle: 1:1
Medium parameters used: f = 5250 MHz; σ = 5.44 S/m; ε_r = 47.643; ρ = 1000 kg/m^3
Phantom section: Flat Section
Measurement Standard: DASY5 (IEEE/IEC/ANSI C63.19-2007)
DASY5 Configuration
Probe: EX3DV4 - SN3922; ConvF(4.46, 4.46, 4.46); Calibrated: 2015/06/17;
Sensor-Surface: 0mm (Fix Surface)
Electronics: DAE4 Sn1372; Calibrated: 2015/06/15
Phantom: ELI v5.0 TP1207 (30deg probe tilt); Type: QDOVA002AA; Serial: TP:1207
Measurement SW: DASY52, Version 52.8 (8); SEMCAD X Version 14.6.10 (7331)

Z Scan (1x1x31): Measurement grid: dx=20mm, dy=20mm, dz=5mm
Maximum value of SAR (measured) = 11.2 W/kg
Date: 2015/11/28
Ambient Temp. : 24.0 degree.C. Liquid Temp.; 23.5 degree.C.

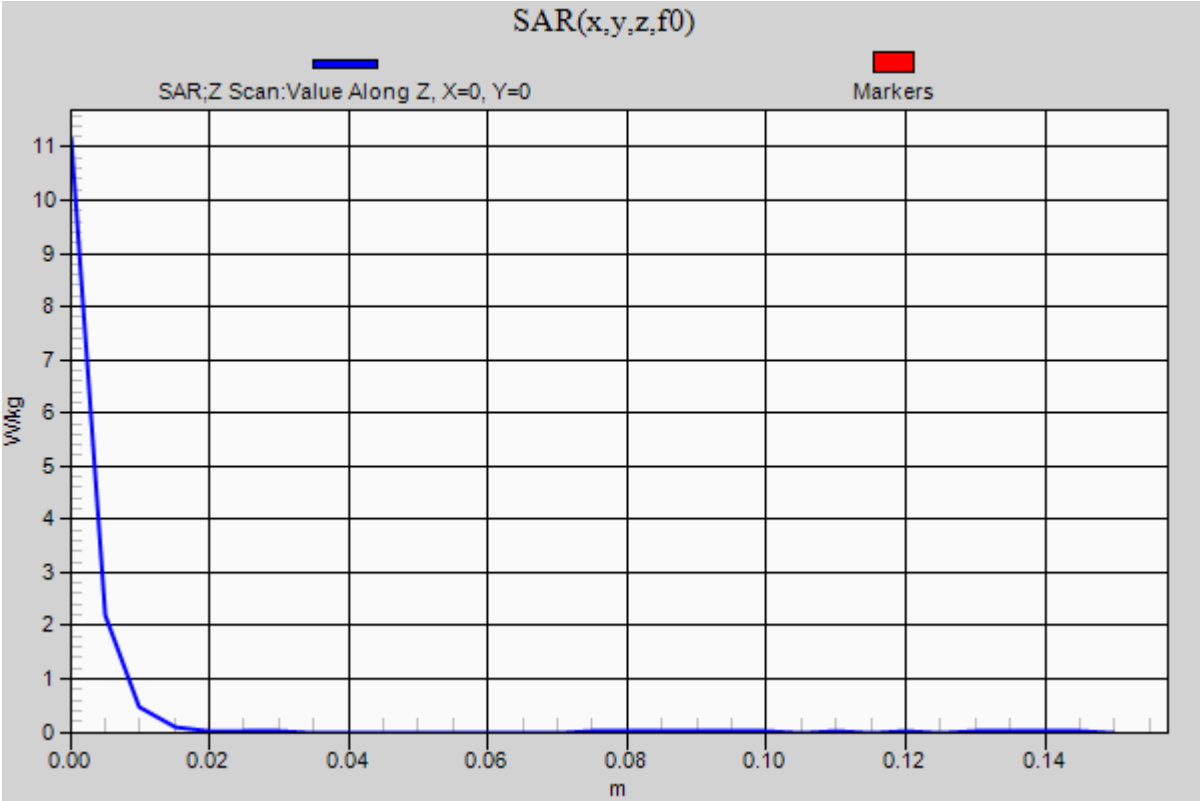

4. System check result Body 5750MHz

(1) Simulated Tissue Liquid Parameter confirmation

DIELECTRIC PARAMETERS MEASUREMENT RESULTS											
Date	Ambient Temp. [deg.c]	Relative Humidity [%]	Liquid type	Liquid Temp. [deg.c]	Measured Frequency [MHz]	Parameters	Target Value	Measured	Deviation [%]	Limit [%]	Remark
-	-	-	-	-	3000	εr	52.0	-	-	-	*1
						σ [mho/m]	2.73	-	-	-	
30-Nov	24.0	50	MBBL 3.5-5.8	23.5	5750	εr	48.3	46.8	-3.1	+/-5	*2
						σ [mho/m]	5.94	6.09	2.5	+/-5	
-	-	-	-	-	5800	εr	48.2	-	-	-	*1
						σ [mho/m]	6.00	-	-	-	

εr: Relative Permittivity / σ : Coductivity
*1 The Target value is a parameter defined in KDB 865664D01.
*2 The dielectric parameters should be linearly interpolated between the closest pair of target frequencies to determine the applicable dielectric parameters corresponding to the device test frequency.

DIELECTRIC PARAMETERS MEASUREMENT RESULTS											
Date	Ambient Temp. [deg.c]	Relative Humidity [%]	Liquid type	Liquid Temp. [deg.c]	Measured Frequency [MHz]	Parameters	Target Value	Measured	Deviation [%]	Limit [%]	Remark
30-Nov	24.0	50	MBBL 3.5-5.8	23.5	5750	εr	48.5	46.8	-3.6	+/-6	*3*4
						σ [mho/m]	6.18	6.09	-1.4	+/-6	

εr: Relative Permittivity / σ : Coductivity
*3 The target value is the calibrated dipole Body TSL parameters. (D5GHzV2 SN:1020, Measured Body TSL parameters)
*4 The limit is for deviation provided by manufacture.

(2) System check result (for calibration by manufacture)

SYSTEM CHECK							
Date	Frequency [MHz]	SAR 1g [W/kg]					
		Forward Power Measured	Conversion 1W Calculation	Target Value(1W)	Deviation [%]	Limit [%]	Remark
30-Nov	5750.00	7.02	70.20	73.70	-4.7	+/-10	*5

*5 The taget value is the parameter defined in SAR measured x 10(7.37 x 10 = 73.7) in manufacturer calibrated dipole (D5GHzV2 SN:1020)
Please refer to " SAR result with Body TSL of Appendix 2 System Check Dipole (D5GHzV2 SN:1020)".