APPENDIX 3 : Test instruments

1. Equipment used

Control No.	Name of Equipment	Manufacture	Model number	Serial number	Calibration	
					Last Cal	due date
MRENT-34	Power sensor	Anritsu	MA2411B	011514	2006/04/25	2007/04/24
MRENT-35	Power Meter	Anritsu	ML2496A	6K00004141	2006/04/25	2007/04/24
MAT-25	Attenuator(10dB)(above1GHz)	Agilent	8493C	71642	2006/06/02	2007/06/01
MPM-01	Power Meter	Agilent	E4417A	GB41290639	2005/11/09	2006/11/08
MPSE-01	Power Sensor	Agilent	E9300B	US40010300	2005/11/28	2006/11/27
MPSE-04	Power sensor	Agilent	E9327A	US40440576	2005/11/23	2006/11/22
MAT-15	Attenuator(30dB)	Agilent	US40010300	08498-60012	2005/12/16	2006/12/15
MSG-05	Signal Genelator	Agilent	E4438C	MY45090353	2006/06/03	2007/06/02
MRFA-08	Pre Amplifier	TSJ	TCBP0206	-	2006/03/11	2007/3/10
MBTR14	Dual Directional Coupler	Hewlett Packard	87300C OPT020	3239A01236	N/A	N/A
MNA-01	Network Analyzer	Agilent	E8358A	US41080381	2006/02/10	2009/02/09
MPB-03	Dosimetric E-Field Probe	Schmid&Partner Engineering AG	EX3DV3	3507	2006/05/26	2007/05/25
MDAE-01	Data Acquisition Electronics	Schmid&Partner Engineering AG	DAE3 V1	509	2006/06/15	2007/06/14
MSTW-16	SAR measurement System	Schmid&Partner Engineering AG	DASY4	I021834	N/A	N/A
MDA-07	2450MHz System Validation Dipole	Schmid&Partner Engineering AG	D2450V2	765	2005/11/15	2007/11/14
MPS-01	SAM Phantom	Schmid&Partner Engineering AG	SAM Twin Phantom V4.0	1196	N/A	N/A
MOS-05	Thermo-Hygrometer	Custom	CTH-190	810201	2006/04/25	2008/04/24
MOS-10	Digtal thermometer	HANNA	Checktemp-2	MOS-10	2005/03/07	2007/03/06
-	Head 2450MHz	N/A	N/A	N/A	Daily check Target value ± 5%	
-	Body 2450MHz	N/A	N/A	N/A	Daily check Target value ± 5%	
-	SAR room	-	-	-	Daily check Ambient Noise <0.012W/kg	

2. Dosimetry assessment setup

These measurements were performed with the automated near-field scanning system DASY4 from Schmid & Partner Engineering AG (SPEAG). The system is based on a high precision robot (working range greater than 0.9 m), which positions the probes with a positional repeatability of better than +/- 0.02 mm. Special E- and H-field probes have been developed for measurements close to material discontinuity, the sensors of which are directly loaded with a Schottky diode and connected via highly resistive lines to the data acquisition unit. The SAR measurements were conducted with the dosimetry probe EX3DV3, SN: 3507 (manufactured by SPEAG), designed in the classical triangular configuration and optimized for dosimetric evaluation. The probe has been calibrated according to the procedure described in [2] with accuracy of better than +/-10%. The spherical isotropy was evaluated with the procedure described in [3] and found to be better than +/-0.25 dB. The phantom used was the
SAM Twin Phantom as described in FCC supplement C, IEEE P1528 and CENELEC EN50361.

3. Configuration and peripherals

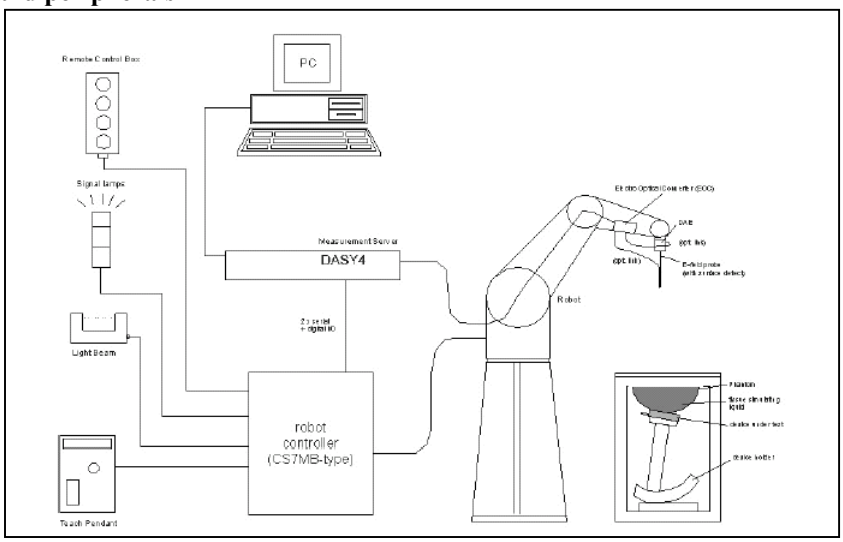

The DASY4 system for performing compliance tests consist of the following items:

1. A standard high precision 6-axis robot (Stäubli RX family) with controller and software.
   An arm extension for accommodating the data acquisition electronics (DAE).

2. A dosimetric probe, i.e., an isotropic E-field probe optimized and calibrated for usage in tissue simulating liquid. The probe is equipped with an optical surface detector system.

3. A data acquisition electronic (DAE), which performs the signal amplification, signal multiplexing, AD-conversion, offset measurements, mechanical surface detection, collision detection, etc. The unit is battery powered with standard or rechargeable batteries. The signal is optically transmitted to the EOC.

4. The Electro-optical converter (EOC) performs the conversion between optical and electrical of the signals for the digital communication to the DAE and for the analog signal from the optical surface detection.
   The EOC is connected to the measurement server.

5. The function of the measurement server is to perform the time critical tasks such as signal filtering, control of the robot operation and fast movement interrupts.

6. A probe alignment unit which improves the (absolute) accuracy of the probe positioning.

7. A computer operating Windows 2000.

8. DASY4 software.

9. Remote control with teaches pendant and additional circuitry for robot safety such as warning lamps, etc.

10. The SAM twin phantom enabling testing left-hand and right-hand usage.

11. The device holder for handheld mobile phones.

12. Tissue simulating liquid mixed according to the given recipes.

13. Validation dipole kits allowing to validate the proper functioning of the system.

4. System components

4.2.1 EX3DV3 Probe Specification

Construction:
Symmetrical design with triangular core
Built-in shielding against static charges
PEEK enclosure material (resistant to organic solvents, e.g., glycol ether)

Calibration(S/N 3507):
Basic Broad Band Calibration in air : 10-3000 MHz
Conversion Factors(Head and Body): 450MHz,900 MHz,1810MHz, 1900, 5.2GHz,5.6GHz,5.8GHz

Frequency:
10 MHz to > 6GHz; Linearity: +/-0.2 dB(30 MHz to 3 GHz)

Directivity:
+/-0.3 dB in HSL (rotation around probe axis)
+/-0.5 dB in tissue material (rotation normal probe axis)

Dynamic Range:
10uW/g to > 100 mW/g;Linearity: +/-0.2 dB(noise: typically < 1uW/g)

Dimensions:
Overall length: 330 mm (Tip: 20 mm)
Tip diameter: 2.5mm (Body: 12 mm)
Typical distance from probe tip to dipole centers: 1 mm

Application:
Highprecision dosimetric measurement in any exposure scenario (e.g., very strong gradient fields).Only probe which enables compliance testing for frequencies up to 6GHz with precision of better 30%.

EX3DV3 E-field Probe

SAM Twin Phantom

Construction:
The shell corresponds to the specifications of the Specific Anthropomorphic Mannequin (SAM) phantom defined in IEEE 1528-200X, CENELEC EN 50361 and IEC 62209.
It enables the dosimetric evaluation of left and right hand phone usage as well as body mounted usage at the flat phantom region. A cover prevents evaporation of the liquid.
Reference markings on the phantom allow the complete setup of all predefined phantom positions and measurement grids by manually teaching three points with the robot.
Shell Thickness:
2 +/-0.2 mm
Filling Volume:
Approx. 25 liters
Dimensions:
(H x L x W): 810 x 1000 x 500 mm

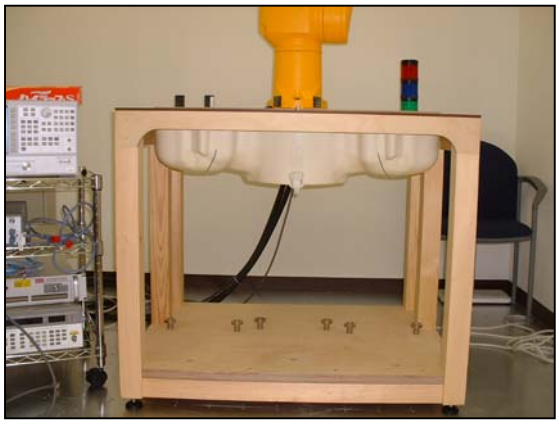

SAM Twin Phantom

Device Holder for Transmitters

In combination with the SAM Twin Phantom V4.0, the Mounting Device enables the rotation of the mounted transmitter
in spherical coordinates whereby the rotation points is the ear opening. The devices can be easily, accurately, and repeatedly positioned according to the FCC and CENELEC specifications. The device holder can be locked at different phantom locations (left head, right head,flat phantom).
* Note: A simulating human hand is not used due to the complex anatomical and geometrical structure of the hand that may produced infinite number of configurations.
To produce the worst-case condition (the hand absorbs antenna output power), the hand is omitted during the tests.

Device holder couldn't be used at this SAR measurement.

Device Holder

5. Test system specifications

Robot RX60L

Number of Axes	:	6
Payload	:	1.6 kg
Reach	:	800mm
Repeatability	:	+/-0.025mm
Control Unit	:	CS7M
Programming Language	:	V+
Manuafacture	:	Stäubli Unimation Corp. Robot Model: RX60

DASY4 Measurement server

Features	:	166MHz low power Pentium MMX 32MB chipdisk and 64MB RAM Serial link to DAE (with watchdog supervision) 16 Bit A/D converter for surface detection system Two serial links to robot (one for real-time communication which is supervised by watchdog) Ethernet link to PC (with watchdog supervision) Emergency stop relay for robot safety chainTwo expansion slots for future applications
Manufacture	:	Schimid & Partner Engineering AG

Data Acquisition Electronic (DAE)

Features	:	Signal amplifier, multiplexer, A/D converter and control logic Serial optical link for communication with DASY4 embedded system (fully remote controlled) 2 step probe touch detector for mechanical surface detection and emergency robot stop (not in -R version)
Measurement Range	:	1 µV to > 200 mV (16 bit resolution and two range settings: 4mV, 400mV)
Input Offset voltage	:	< 1 µV (with auto zero)
Input Resistance	:	200 MΩ
Battery Power	:	> 10 h of operation (with two 9 V battery)
Dimension	:	60 x 60 x 68 mm
Manufacture	:	Schimid & Partner Engineering AG

Software

Item	:	Dosimetric Assesment System DASY4
Type No.	:	SD 000 401A, SD 000 402A
Software version No.	:	4.6
Manufacture / Origin	:	Schimid & Partner Engineering AG

E-Field Probe

Model	:	EX3DV3
Serial No.	:	3507
Construction	:	Symmetrical design with triangular core
Frequency	:	10 MHz to 6 GHz
Linearity	:	+/-0.2 dB (30 MHz to 3 GHz)
Manufacture	:	Schimid & Partner Engineering AG

Phantom

Type	:	SAM Twin Phantom V4.0
Shell Material	:	Fiberglass
Thickness	:	2.0 +/-0.2 mm
Volume	:	Approx. 25 liters
Manufacture	:	Schimid & Partner Engineering AG

6. Simulated Tissues Composition of 2450MHz

Ingredient	MIXTURE(%)	
	Head 2450MHz	Muscle 2450MHz
Water	45.0	69.83
DGMBE	55.0	30.2

Note:DGMBE(Diethylenglycol-monobuthyl ether)

7. Validation Measurement

Simulated tissue liquid parameter

7-a Simulated Tissue Liquid Parameter confirmation

The dielectric parameters were checked prior to assessment using the HP85070D dielectric probe kit.
The dielectric parameters measurement are reported in each correspondent section.

7-b Head 2450 MHz

Type of liquid : **Head 2450 MHz**
Ambient temperature (deg.c.) : **25.0**
Relative Humidity (%) : **60(10-Oct), 52(11-Oct)**
Liquid depth (cm) : **15.0**

DIELECTRIC PARAMETERS MEASUREMENT RESULTS								
Date	Frequency	Liquid Temp [deg.c]		Parameters	Target Value	Measured	Deviation [%]	Limit [%]
		Before	After					
10-Oct	2450	24.0	24.0	Relative Permittivity εr	39.2	37.3	-4.8	+/-5
				Coductivity σ [mho/m]	1.80	1.89	5.0	+/-5
11-Oct	2450	24.0	24.0	Relative Permittivity εr	39.2	37.3	-4.8	+/-5
				Coductivity σ [mho/m]	1.80	1.89	5.0	+/-5

7-c Muscle 2450 MHz

Type of liquid : **Muscle 2450 MHz**
Ambient temperature (deg.c.) : **25.0**
Relative Humidity (%) : **52**
Liquid depth (cm) : **15.0**

DIELECTRIC PARAMETERS MEASUREMENT RESULTS								
Date	Frequency	Liquid Temp [deg.c]		Parameters	Target Value	Measured	Deviation [%]	Limit [%]
		Before	After					
11-Oct	2450	24.0	24.0	Relative Permittivity εr	52.7	50.1	-4.9	+/-5
				Coductivity σ [mho/m]	1.95	2.00	2.6	+/-5

8. System validation data

Prior to the assessment, the system validation kit was used to test whether the system was operating within its specifications of +/-10%. The validation results are in the table below. Please refer to APPENDIX3.

System validation of 2450MHz

Type of liquid	:	**HEAD 2450MHz**
Frequenc	:	**2450MHz**
Ambient temperature (deg.c.)	:	**25.0**
Relative Humidity (%)	:	**60(10-Oct), 52(11-Oct)**
Dipole	:	**D2450V2 SN:765**
Power	:	**250mW**

SYSTEM PERFORMANCE CHECK										
Date	Liquid (HEAD 2450MHz)						System dipole validation target & measured			
	Liquid Temp [deg.c.]		Relative Permittivity εr		Conductivity σ [mho/m]		SAR 1g [W/kg]		Deviation [%]	Limit [%]
	Before	After	Target	Measured	Target	Measured	Target	Measured		
10-Oct	24.5	24.5	39.2	37.3	1.80	1.89	13.1	14.3	9.2	+/-10
11-Oct	24.5	24.5	39.2	37.3	1.80	1.89	13.1	13.9	6.1	+/-10

Note: Please refer to Attachment for the result representation in plot format

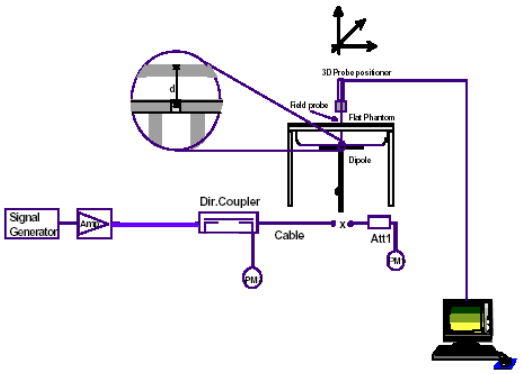

2450MHz System performance check setup

Test system for the system performance check setup diagram

9. Validation uncertainty

The uncertainty budget has been determined for the DASY4 measurement system according to the SPEAG documents[6][7] and is given in the following Table.

Error Description	Uncertainty value ± %	Probability distribution	divisor	(ci) 1g	Standard Uncertainty (1g)	vi or veff
Measurement System						
Probe calibration	±6.8	Normal	1	1	±6.8	∞
Axial isotropy of the probe	±4.7	Rectangular	√3	1	±2.7	∞
Spherical isotropy of the probe	±9.6	Rectangular	0	0	0	∞
Boundary effects	±2.0	Rectangular	√3	1	±1.2	∞
Probe linearity	±4.7	Rectangular	√3	1	±2.7	∞
Detection limit	±1.0	Rectangular	√3	1	±0.6	∞
Readout electronics	±0.3	Normal	1	1	±0.3	∞
Response time	0	Rectangular	√3	1	0	∞
Integration time	0	Rectangular	√3	1	0	∞
RF ambient Noise	±3.0	Rectangular	√3	1	±1.7	∞
RF ambient Reflections	±3.0	Rectangular	√3	1	±1.7	∞
Probe Positioner	±0.8	Rectangular	√3	1	±0.5	∞
Probe positioning	±9.9	Rectangular	1	1	±5.7	∞
Algorithms for Max.SAR Eval.	±4.0	Rectangular	√3	1	±2.3	∞
Dipole						
Dipole Axis to Liquid Distance	±2.0	Rectangular	√3	1	±1.2	∞
Input power and SAR drift meas.	±4.7	Rectangular	√3	1	±2.7	∞
Phantom and Setup						
Phantom uncertainty	±4.0	Rectangular	√3	1	±2.3	∞
Liquid conductivity (target)	±5.0	Rectangular	√3	0.64	±1.8	∞
Liquid conductivity (meas.)	±5.0	Rectangular	1	0.64	±3.2	∞
Liquid permittivity (target)	±5.0	Rectangular	√3	0.6	±1.7	∞
Liquid permittivity (meas.)	±5.0	Rectangular	1	0.6	±3.0	∞
Combined Standard Uncertainty					**±12.079**	
Expanded Uncertainty (k=2)					**±24.2**	

10. Validation Measurement data

System Validation / Dipole 2450 MHz / Forward Conducted Power : 250mW

Dipole 2450 MHz;
Type: D2450V2; Serial:765
Communication System: CW; Frequency: 2450 MHz;Duty Cycle: 1:1
Medium parameters used: f = 2450 MHz; σ = 1.89 mho/m; ε_r = 37.3; ρ = 1000 kg/m^3
Phantom section: Flat Section
Measurement Standard: DASY4 (High Precision Assessment)

DASY4 Configuration:
Probe: EX3DV3 - SN3507; ConvF(8.26, 8.26, 8.26); Calibrated: 2006/05/26
Sensor-Surface: 2mm (Mechanical Surface Detection)
Electronics: DAE3 Sn509; Calibrated: 2006/06/15
Phantom: SAM 1196
Measurement SW: DASY4, V4.6 Build 23; Postprocessing SW: SEMCAD, V1.8 Build 160

Area Scan (61x61x1): Measurement grid: dx=15mm, dy=15mm
Maximum value of SAR (interpolated) = 24.3 mW/g

Zoom Scan (7x7x7)/Cube 0: Measurement grid: dx=5mm, dy=5mm, dz=5mm
Reference Value = 93.2 V/m; Power Drift = -0.009 dB
Peak SAR (extrapolated) = 29.9 W/kg
SAR(1 g) = 14.3 mW/g; SAR(10 g) = 6.59 mW/g
Maximum value of SAR (measured) = 22.0 mW/g

Test Date = 10/10/06
Ambient Temperature = 25.0 degree C.
Liquid Temperature = Before 24.5 degree C. , After 24.5 degree C.

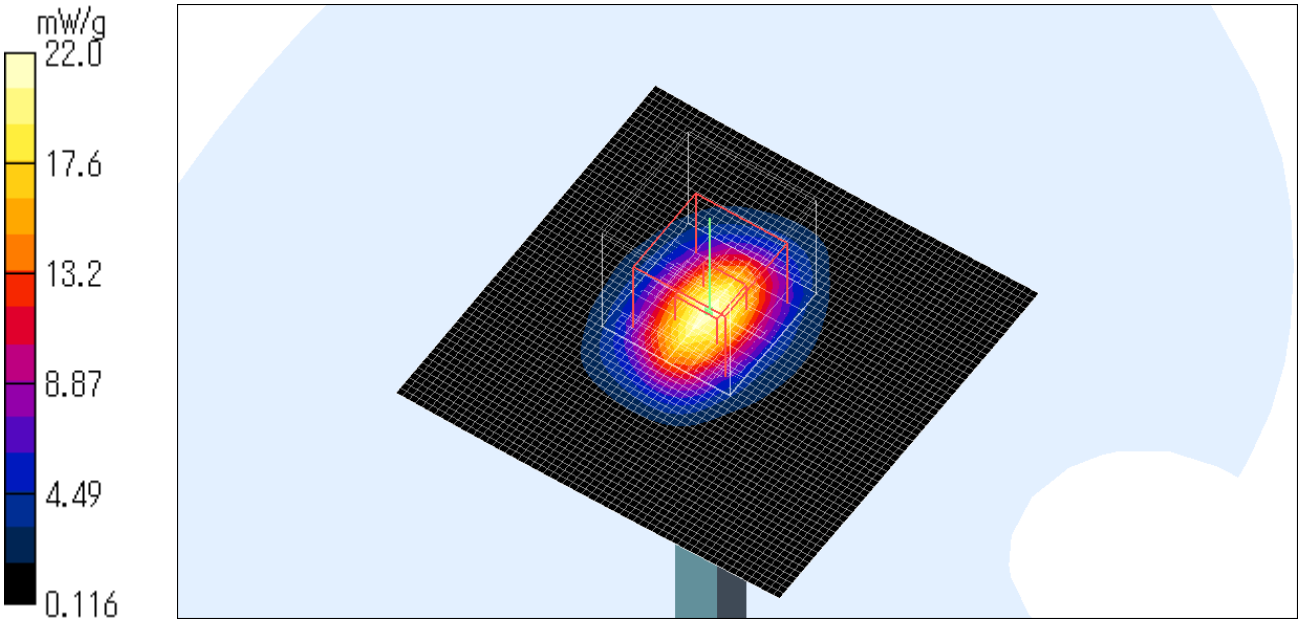

System Validation / Dipole 2450 MHz / Forward Conducted Power : 250mW

Dipole 2450 MHz;
Type: D2450V2; Serial:765
Communication System: CW; Frequency: 2450 MHz;Duty Cycle: 1:1
Medium parameters used: f = 2450 MHz; σ = 1.89 mho/m; ε_r = 37.3; ρ = 1000 kg/m^3
Phantom section: Flat Section
Measurement Standard: DASY4 (High Precision Assessment)

DASY4 Configuration:
Probe: EX3DV3 - SN3507; ConvF(8.26, 8.26, 8.26); Calibrated: 2006/05/26
Sensor-Surface: 2mm (Mechanical Surface Detection)
Electronics: DAE3 Sn509; Calibrated: 2006/06/15
Phantom: SAM 1196
Measurement SW: DASY4, V4.6 Build 23; Postprocessing SW: SEMCAD, V1.8 Build 160

Area Scan (61x61x1): Measurement grid: dx=15mm, dy=15mm
Maximum value of SAR (interpolated) = 23.8 mW/g

Zoom Scan (7x7x7)/Cube 0: Measurement grid: dx=5mm, dy=5mm, dz=5mm
Reference Value = 92.5 V/m; Power Drift = -0.021 dB
Peak SAR (extrapolated) = 28.9 W/kg
SAR(1 g) = 13.9 mW/g; SAR(10 g) = 6.46 mW/g
Maximum value of SAR (measured) = 21.3 mW/g

Test Date =10/11/06
Ambient Temperature = 25.0 degree.C.
Liquid Temperature = Before 24.5 degree C. , After 24.5 degree C.

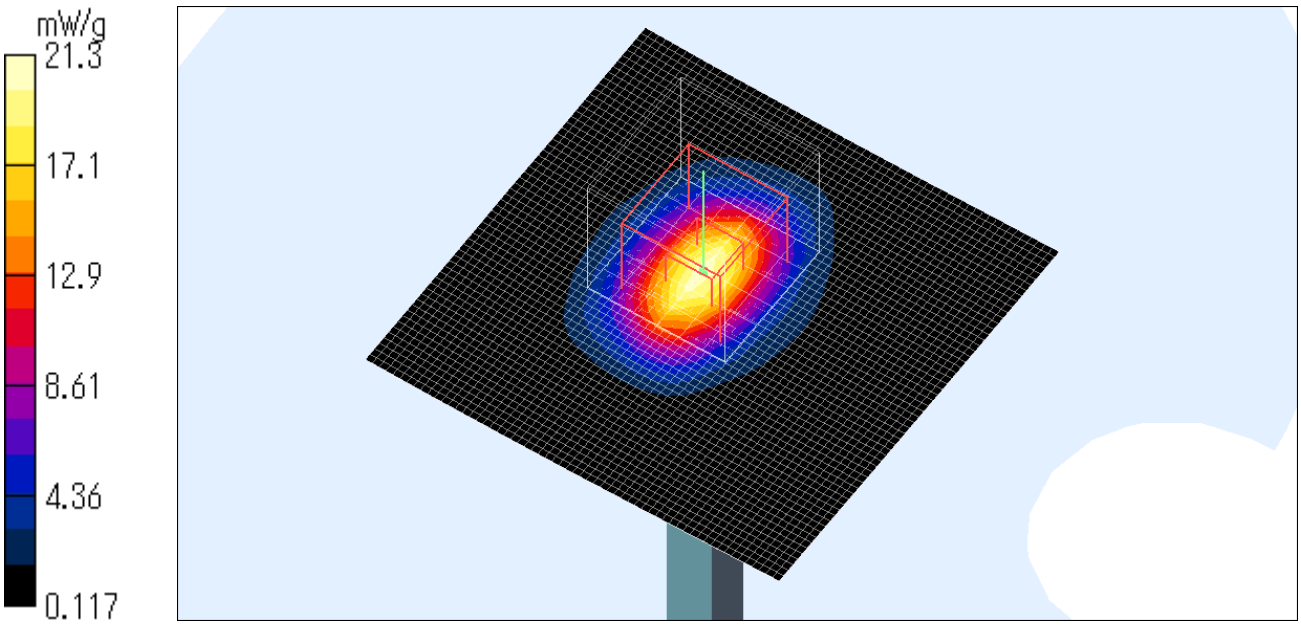

11. System Validation Dipole (D2450V2,S/N: 765)

Calibration Laboratory of
Schmid & Partner
Engineering AG
Zeughausstrasse 43, 8004 Zurich, Switzerland

S Schweizerischer Kalibrierdienst
C Service suisse d'étalonnage
Servizio svizzero di taratura
S Swiss Calibration Service

Accredited by the Swiss Federal Office of Metrology and Accreditation
The Swiss Accreditation Service is one of the signatories to the EA Multilateral Agreement for the recognition of calibration certificates

Accreditation No.: SCS 108

Client **MTT**

Certificate No: D2450V2-765_Nov04

CALIBRATION CERTIFICATE

Object	D2450V2 - SN: 765
Calibration procedure(s)	QA CAL-05.v6 Calibration procedure for dipole validation kits
Calibration date:	November 15, 2004
Condition of the calibrated item	In Tolerance

This calibration certificate documents the traceability to national standards, which realize the physical units of measurements (SI).
The measurements and the uncertainties with confidence probability are given on the following pages and are part of the certificate.

All calibrations have been conducted in the closed laboratory facility: environment temperature (22 ± 3)°C and humidity < 70%.

Calibration Equipment used (M&TE critical for calibration)

Primary Standards	ID #	Cal Date (Calibrated by, Certificate No.)	Scheduled Calibration
Power meter EPM E442	GB37480704	12-Oct-04 (METAS, No. 251-00412)	Oct-05
Power sensor HP 8481A	US37292783	12-Oct-04 (METAS, No. 251-00412)	Oct-05
Reference 20 dB Attenuator	SN: 5086 (20g)	10-Aug-04 (METAS, No 251-00402)	Aug-05
Reference 10 dB Attenuator	SN: 5047.2 (10r)	10-Aug-04 (METAS, No 251-00402)	Aug-05
Reference Probe ES3DV2	SN 3025	29-Oct-04 (SPEAG, No. ES3-3025_Oct04)	Oct-05
DAE4	SN 601	6-Nov-03 (SPEAG, No. DAE4-601_Jul04)	Jul-05

Secondary Standards	ID #	Check Date (in house)	Scheduled Check
Power sensor HP 8481A	MY41092317	18-Oct-02 (SPEAG, in house check Oct-03)	In house check: Oct-05
RF generator R&S SML-03	100698	27-Mar-02 (SPEAG, in house check Dec-03)	In house check: Dec-05
Network Analyzer HP 8753E	US37390585 S4206	18-Oct-01 (SPEAG, in house check Nov-03)	In house check: Nov 04

	Name	Function	Signature
Calibrated by:	Mike Meili	Laboratory Technician	MMeili
Approved by:	Katja Pokovic	Technical Manager	

Issued: November 17, 2004

This calibration certificate shall not be reproduced except in full without written approval of the laboratory.

Certificate No: D2450V2-765_Nov04 Page 1 of 9

Syst

Calibration Laboratory of
Schmid & Partner
Engineering AG
Zeughausstrasse 43, 8004 Zurich, Switzerland

S Schweizerischer Kalibrierdienst
C Service suisse d'étalonnage
Servizio svizzero di taratura
S Swiss Calibration Service

Accredited by the Swiss Federal Office of Metrology and Accreditation
The Swiss Accreditation Service is one of the signatories to the EA Multilateral Agreement for the recognition of calibration certificates

Accreditation No.: SCS 108

Glossary:

TSL	tissue simulating liquid
ConvF	sensitivity in TSL / NORM x,y,z
N/A	not applicable or not measured

Calibration is Performed According to the Following Standards:

a) IEEE Std 1528-2003, "IEEE Recommended Practice for Determining the Peak Spatial-Averaged Specific Absorption Rate (SAR) in the Human Head from Wireless Communications Devices: Measurement Techniques", December 2003
b) CENELEC EN 50361, "Basic standard for the measurement of Specific Absorption Rate related to human exposure to electromagnetic fields from mobile phones (300 MHz - 3 GHz), July 2001
c) Federal Communications Commission Office of Engineering & Technology (FCC OET), "Evaluating Compliance with FCC Guidelines for Human Exposure to Radiofrequency Electromagnetic Fields; Additional Information for Evaluating Compliance of Mobile and Portable Devices with FCC Limits for Human Exposure to Radiofrequency Emissions", Supplement C (Edition 01-01) to Bulletin 65

Additional Documentation:

d) DASY4 System Handbook

Methods Applied and Interpretation of Parameters:

- *Measurement Conditions:* Further details are available from the Validation Report at the end of the certificate. All figures stated in the certificate are valid at the frequency indicated.
- *Antenna Parameters with TSL:* The dipole is mounted with the spacer to position its feed point exactly below the center marking of the flat phantom section, with the arms oriented parallel to the body axis.
- *Feed Point Impedance and Return Loss:* These parameters are measured with the dipole positioned under the liquid filled phantom. The impedance stated is transformed from the measurement at the SMA connector to the feed point. The Return Loss ensures low reflected power. No uncertainty required.
- *Electrical Delay:* One-way delay between the SMA connector and the antenna feed point. No uncertainty required.
- *SAR measured:* SAR measured at the stated antenna input power.
- *SAR normalized:* SAR as measured, normalized to an input power of 1 W at the antenna connector.
- *SAR for nominal TSL parameters:* The measured TSL parameters are used to calculate the nominal SAR result.

Measurement Conditions

DASY system configuration, as far as not given on page 1.

DASY Version	DASY4	V4.4
Extrapolation	Advanced Extrapolation	
Phantom	Modular Flat Phantom V5.0	
Distance Dipole Center - TSL	10 mm	with Spacer
Area Scan resolution	dx, dy = 15 mm	
Zoom Scan Resolution	dx, dy, dz = 5 mm	
Frequency	2450 MHz ± 1 MHz	

Head TSL parameters

The following parameters and calculations were applied.

	Temperature	**Permittivity**	**Conductivity**
Nominal Head TSL parameters	22.0 °C	39.2	1.80 mho/m
Measured Head TSL parameters	(23.0 ± 0.2) °C	38.3 ± 6 %	1.86 mho/m ± 6 %
Head TSL temperature during test	(23.0 ± 0.2) °C	----	----

SAR result with Head TSL

SAR averaged over 1 cm^3 (1 g) of Head TSL	condition	
SAR measured	250 mW input power	13.5 mW / g
SAR normalized	normalized to 1W	54.0 mW / g
SAR for nominal Head TSL parameters [1]	normalized to 1W	**52.7 mW / g ± 17.0 % (k=2)**

SAR averaged over 10 cm^3 (10 g) of Head TSL	condition	
SAR measured	250 mW input power	6.15 mW / g
SAR normalized	normalized to 1W	24.6 mW / g
SAR for nominal Head TSL parameters [1]	normalized to 1W	**24.0 mW / g ± 16.5 % (k=2)**

[1] Correction to nominal TSL parameters according to d), chapter "SAR Sensitivities"

UL Apex Co., Ltd.
Head Office EMC Lab.
4383-326 Asama-cho, Ise-shi, Mie-ken 516-0021 JAPAN
Telephone: +81 596 24 8116
Facsimile: +81 596 24 8124

Body TSL parameters

The following parameters and calculations were applied.

	Temperature	Permittivity	Conductivity
Nominal Body TSL parameters	22.0 °C	52.7	1.95 mho/m
Measured Body TSL parameters	(22.0 ± 0.2) °C	51.7 ± 6 %	1.96 mho/m ± 6 %
Body TSL temperature during test	(22.0 ± 0.2) °C	----	----

SAR result with Body TSL

SAR averaged over 1 cm^3 (1 g) of Body TSL	condition	
SAR measured	250 mW input power	13.3 mW / g
SAR normalized	normalized to 1W	53.2 mW / g
SAR for nominal Body TSL parameters [2]	normalized to 1W	**52.5 mW / g ± 17.0 % (k=2)**

SAR averaged over 10 cm^3 (10 g) of Body TSL	condition	
SAR measured	250 mW input power	6.12 mW / g
SAR normalized	normalized to 1W	24.5 mW / g
SAR for nominal Body TSL parameters [1]	normalized to 1W	**24.1 mW / g ± 16.5 % (k=2)**

[2] Correction to nominal TSL parameters according to d), chapter "SAR Sensitivities"

Appendix

Antenna Parameters with Head TSL

Impedance, transformed to feed point	52.7 Ω + j4.6 Ω
Return Loss	- 25.8 dB

Antenna Parameters with Body TSL

Impedance, transformed to feed point	48.9 Ω + j6.3 Ω
Return Loss	- 23.8 dB

General Antenna Parameters and Design

Electrical Delay (one direction)	1.175 ns

After long term use with 100W radiated power, only a slight warming of the dipole near the feedpoint can be measured.

The dipole is made of standard semirigid coaxial cable. The center conductor of the feeding line is directly connected to the second arm of the dipole. The antenna is therefore short-circuited for DC-signals.
No excessive force must be applied to the dipole arms, because they might bend or the soldered connections near the feedpoint may be damaged.

Additional EUT Data

Manufactured by	SPEAG
Manufactured on	August 10, 2004

DASY4 Validation Report for Head TSL

Date/Time: 11/17/04 10:57:18

Test Laboratory: SPEAG, Zürich, Switzerland

DUT: Dipole 2450 MHz; Type: D2450V2; Serial: D2450V2 - SN765

Communication System: CW-2450; Frequency: 2450 MHz;Duty Cycle: 1:1
Medium: HSL 2450 MHz;
Medium parameters used: f = 2450 MHz; σ = 1.86 mho/m; ε_r = 38.3; ρ = 1000 kg/m^3
Phantom section: Flat Section
Measurement Standard: DASY4 (High Precision Assessment)

DASY4 Configuration:

- Probe: ES3DV2 - SN3025; ConvF(4.4, 4.4, 4.4); Calibrated: 29.10.2004
- Sensor-Surface: 4mm (Mechanical Surface Detection)
- Electronics: DAE4 Sn601; Calibrated: 22.07.2004
- Phantom: Flat Phantom quarter size -SN:1001; Type: QD000P50AA; Serial: SN:1001
- Measurement SW: DASY4, V4.4 Build 3; Postprocessing SW: SEMCAD, V1.8 Build 130

Pin = 250 mW; d = 10 mm/Area Scan (81x81x1): Measurement grid: dx=15mm, dy=15mm
Maximum value of SAR (interpolated) = 15.6 mW/g

Pin = 250 mW; d = 10 mm/Zoom Scan (7x7x7)/Cube 0: Measurement grid: dx=5mm, dy=5mm, dz=5mm
Reference Value = 79.7 V/m; Power Drift = 0.2 dB
Peak SAR (extrapolated) = 29 W/kg
SAR(1 g) = 13.5 mW/g; SAR(10 g) = 6.15 mW/g
Maximum value of SAR (measured) = 15.3 mW/g

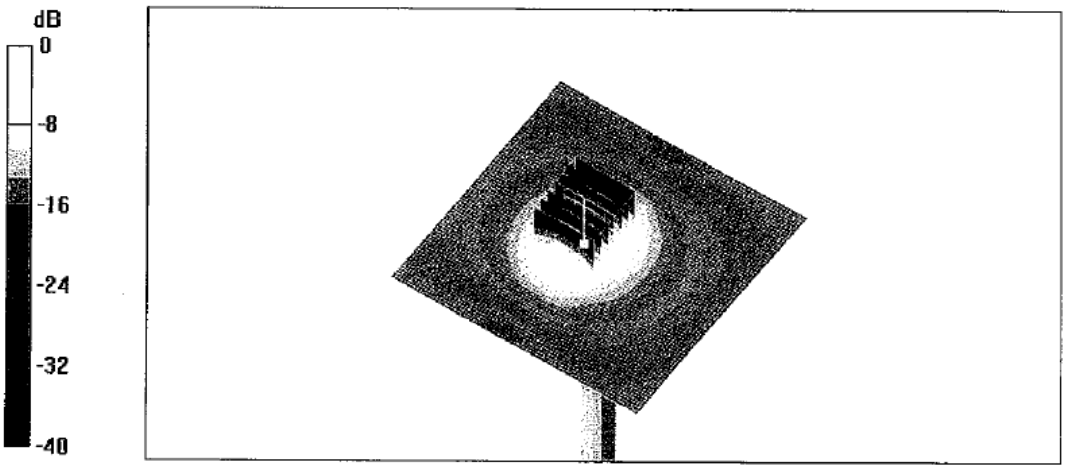

0 dB = 15.3 mW/g

UL Apex Co., Ltd.
Head Office EMC Lab.
4383-326 Asama-cho, Ise-shi, Mie-ken 516-0021 JAPAN
Telephone: +81 596 24 8116
Facsimile: +81 596 24 8124

Impedance Measurement Plot for Head TSL

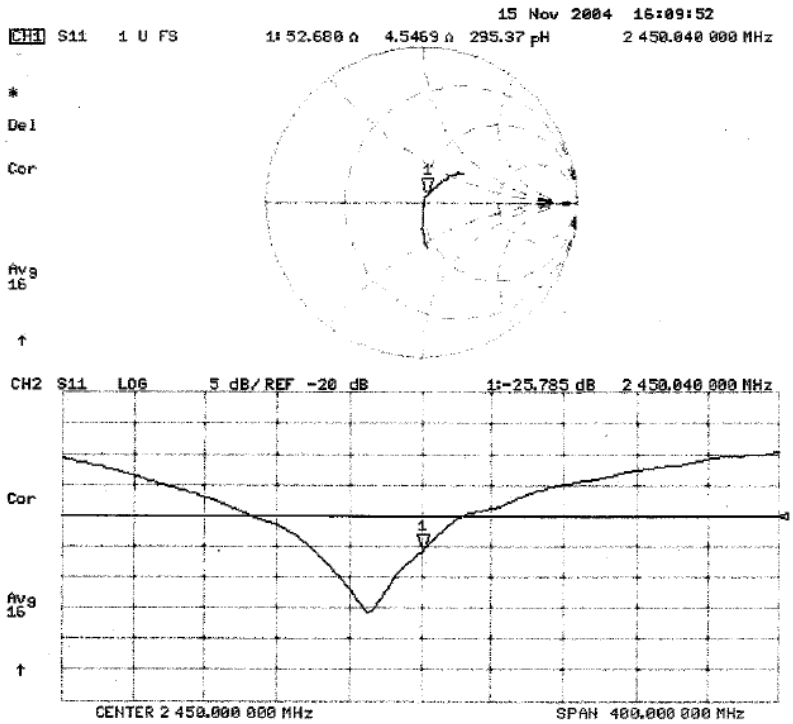

DASY4 Validation Report for Body TSL

Date/Time: 11/17/04 10:57:37

Test Laboratory: SPEAG, Zürich, Switzerland

DUT: Dipole 2450 MHz; Type: D2450V2; Serial: D2450V2 - SN765

Communication System: CW-2450; Frequency: 2450 MHz;Duty Cycle: 1:1
Medium: MSL 2450 MHz;
Medium parameters used: f = 2450 MHz; σ = 1.96 mho/m; ε_r = 51.7; ρ = 1000 kg/m^3
Phantom section: Flat Section
Measurement Standard: DASY4 (High Precision Assessment)

DASY4 Configuration:

- Probe: ES3DV2 - SN3025; ConvF(4.13, 4.13, 4.13); Calibrated: 29.10.2004
- Sensor-Surface: 4mm (Mechanical Surface Detection)
- Electronics: DAE4 Sn601; Calibrated: 22.07.2004
- Phantom: SAM with CRP - TP1006; Type: SAM 4.0; Serial: TP:1006
- Measurement SW: DASY4, V4.4 Build 3; Postprocessing SW: SEMCAD, V1.8 Build 130

Pin = 250 mW; d = 10 mm/Area Scan (81x81x1): Measurement grid: dx=15mm, dy=15mm
Maximum value of SAR (interpolated) = 15.3 mW/g

Pin = 250 mW; d = 10 mm/Zoom Scan (7x7x7)/Cube 0: Measurement grid: dx=5mm, dy=5mm, dz=5mm
Reference Value = 88.6 V/m; Power Drift = 0.1 dB
Peak SAR (extrapolated) = 27.4 W/kg
SAR(1 g) = 13.3 mW/g; SAR(10 g) = 6.12 mW/g
Maximum value of SAR (measured) = 15.2 mW/g

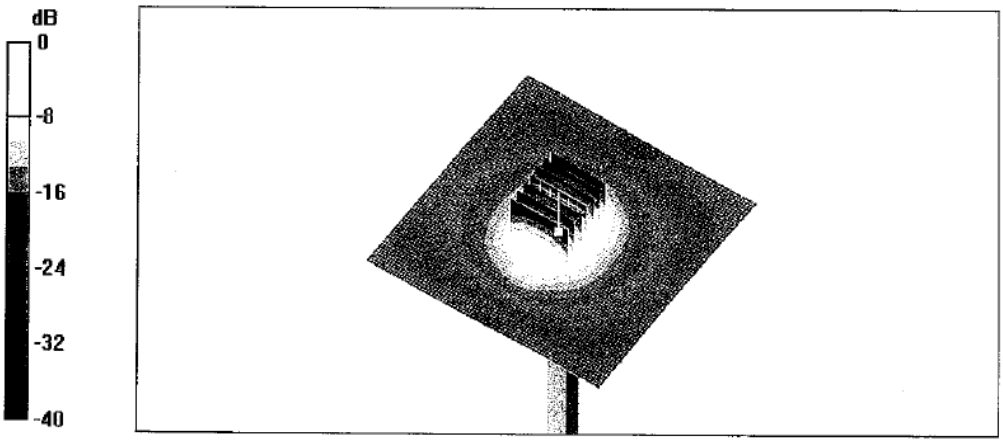

0 dB = 15.2mW/g

UL Apex Co., Ltd.
Head Office EMC Lab.
4383-326 Asama-cho, Ise-shi, Mie-ken 516-0021 JAPAN
Telephone: +81 596 24 8116
Facsimile: +81 596 24 8124

Impedance Measurement Plot for Body TSL

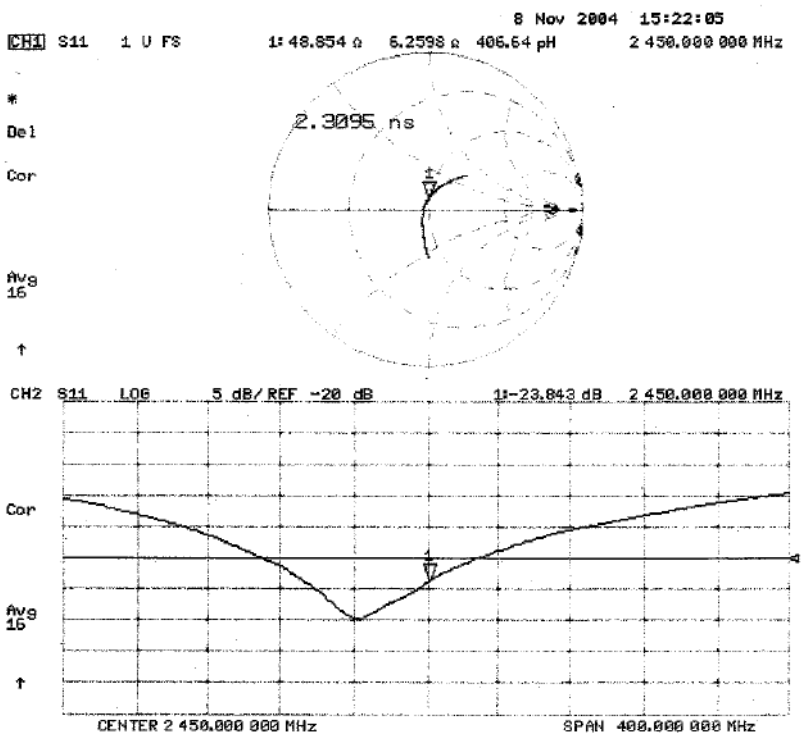

UL Apex Co., Ltd.
Head Office EMC Lab.
4383-326 Asama-cho, Ise-shi, Mie-ken 516-0021 JAPAN
Telephone: +81 596 24 8116
Facsimile: +81 596 24 8124

12. Dosimetric E-Field Probe Calibration (EX3DV3,S/N: 3507)

Calibration Laboratory of
Schmid & Partner
Engineering AG
Zeughausstrasse 43, 8004 Zurich, Switzerland

S Schweizerischer Kalibrierdienst
C Service suisse d'étalonnage
Servizio svizzero di taratura
S Swiss Calibration Service

Accredited by the Swiss Federal Office of Metrology and Accreditation
The Swiss Accreditation Service is one of the signatories to the EA Multilateral Agreement for the recognition of calibration certificates

Accreditation No.: SCS 108

Client **UL A-pex (MTI)** Certificate no. **EX3-3507_May06**

CALIBRATION CERTIFICATE

Object	**EX3DV3 - SN: 3507**
Calibration procedure(s)	**QA CAL-01.v5, QA CAL-12.v4 and QA CAL-14.v3** **Calibration procedure for dosimetric E-field probes**
Calibration date:	**May 26, 2006**
Condition of the calibrated item	**In Tolerance**

This calibration certificate documents the traceability to national standards, which realize the physical units of measurements (SI).
The measurements and the uncertainties with confidence probability are given on the following pages and are part of the certificate.

All calibrations have been conducted in the closed laboratory facility: environment temperature (22 ± 3)°C and humidity < 70%.

Calibration Equipment used (M&TE critical for calibration)

Primary Standards	ID #	Cal Date (Calibrated by, Certificate No.)	Scheduled Calibration
Power meter E4419B	GB41293874	5-Apr-06 (METAS, No. 251-00557)	Apr-07
Power sensor E4412A	MY41495277	5-Apr-06 (METAS, No. 251-00557)	Apr-07
Power sensor E4412A	MY41498087	5-Apr-06 (METAS, No. 251-00557)	Apr-07
Reference 3 dB Attenuator	SN: S5054 (3c)	11-Aug-05 (METAS, No. 251-00499)	Aug-06
Reference 20 dB Attenuator	SN: S5086 (20b)	4-Apr-06 (METAS, No. 251-00558)	Apr-07
Reference 30 dB Attenuator	SN: S5129 (30b)	11-Aug-05 (METAS, No. 251-00500)	Aug-06
Reference Probe ES3DV2	SN: 3013	2-Jan-06 (SPEAG, No. ES3-3013_Jan06)	Jan-07
DAE4	SN: 654	2-Feb-06 (SPEAG, No. DAE4-654_Feb06)	Feb-07

Secondary Standards	ID #	Check Date (in house)	Scheduled Check
RF generator HP 8648C	US3642U01700	4-Aug-99 (SPEAG, in house check Nov-05)	In house check: Nov-07
Network Analyzer HP 8753E	US37390585	18-Oct-01 (SPEAG, in house check Nov-05)	In house check: Nov 06

	Name	Function	Signature
Calibrated by:	**Katja Pokovic**	**Technical Manager**	
Approved by:	**Fin Bomholt**	**R&D Director**	

Issued: May 26, 2006

This calibration certificate shall not be reproduced except in full without written approval of the laboratory.

Certificate No: EX3-3507_May06 Page 1 of 9

Calibration Laboratory of
Schmid & Partner
Engineering AG
Zeughausstrasse 43, 8004 Zurich, Switzerland

S Schweizerischer Kalibrierdienst
C Service suisse d'étalonnage
Servizio svizzero di taratura
S Swiss Calibration Service

Accredited by the Swiss Federal Office of Metrology and Accreditation
The Swiss Accreditation Service is one of the signatories to the EA Multilateral Agreement for the recognition of calibration certificates

Accreditation No.: **SCS 108**

Glossary:

TSL	tissue simulating liquid
NORMx,y,z	sensitivity in free space
ConF	sensitivity in TSL / NORMx,y,z
DCP	diode compression point
Polarization φ	φ rotation around probe axis
Polarization ϑ	ϑ rotation around an axis that is in the plane normal to probe axis (at measurement center), i.e., ϑ = 0 is normal to probe axis

Calibration is Performed According to the Following Standards:

a) IEEE Std 1528-2003, "IEEE Recommended Practice for Determining the Peak Spatial-Averaged Specific Absorption Rate (SAR) in the Human Head from Wireless Communications Devices: Measurement Techniques", December 2003
b) CENELEC EN 50361, "Basic standard for the measurement of Specific Absorption Rate related to human exposure to electromagnetic fields from mobile phones (300 MHz - 3 GHz), July 2001

Methods Applied and Interpretation of Parameters:

- *NORMx,y,z:* Assessed for E-field polarization ϑ = 0 (f ≤ 900 MHz in TEM-cell; f > 1800 MHz: R22 waveguide). NORMx,y,z are only intermediate values, i.e., the uncertainties of NORMx,y,z does not effect the E^2-field uncertainty inside TSL (see below *ConvF*).
- *NORM(f)x,y,z = NORMx,y,z * frequency_response* (see Frequency Response Chart). This linearization is implemented in DASY4 software versions later than 4.2. The uncertainty of the frequency response is included in the stated uncertainty of *ConvF*.
- *DCPx,y,z:* DCP are numerical linearization parameters assessed based on the data of power sweep (no uncertainty required). DCP does not depend on frequency nor media.
- *ConvF and Boundary Effect Parameters:* Assessed in flat phantom using E-field (or Temperature Transfer Standard for f ≤ 800 MHz) and inside waveguide using analytical field distributions based on power measurements for f > 800 MHz. The same setups are used for assessment of the parameters applied for boundary compensation (alpha, depth) of which typical uncertainty values are given. These parameters are used in DASY4 software to improve probe accuracy close to the boundary. The sensitivity in TSL corresponds to *NORMx,y,z * ConvF* whereby the uncertainty corresponds to that given for *ConvF*. A frequency dependent *ConvF* is used in DASY version 4.4 and higher which allows extending the validity from ± 50 MHz to ± 100 MHz.
- *Spherical isotropy (3D deviation from isotropy)*: in a field of low gradients realized using a flat phantom exposed by a patch antenna.
- *Sensor Offset*: The sensor offset corresponds to the offset of virtual measurement center from the probe tip (on probe axis). No tolerance required.

Probe EX3DV3

SN:3507

Manufactured:	December 15, 2003
Last calibrated:	April 12, 2005
Recalibrated:	May 26, 2006

Calibrated for DASY Systems

(Note: non-compatible with DASY2 system!)

EX3DV3 SN:3507 **May 26, 2006**

DASY - Parameters of Probe: EX3DV3 SN:3507

Sensitivity in Free Space[A]

NormX	**0.695** ± 10.1%	$\mu V/(V/m)^2$	DCP X	**96** mV
NormY	**0.745** ± 10.1%	$\mu V/(V/m)^2$	DCP Y	**96** mV
NormZ	**0.727** ± 10.1%	$\mu V/(V/m)^2$	DCP Z	**96** mV

Diode Compression[B]

Sensitivity in Tissue Simulating Liquid (Conversion Factors)

Please see Page 8.

Boundary Effect

TSL **900 MHz** **Typical SAR gradient: 5 % per mm**

Sensor Center to Phantom Surface Distance		**2.0 mm**	**3.0 mm**
SAR_{be} [%]	Without Correction Algorithm	3.1	1.3
SAR_{be} [%]	With Correction Algorithm	0.0	0.1

TSL **1810 MHz** **Typical SAR gradient: 10 % per mm**

Sensor Center to Phantom Surface Distance		**2.0 mm**	**3.0 mm**
SAR_{be} [%]	Without Correction Algorithm	1.6	0.7
SAR_{be} [%]	With Correction Algorithm	0.3	0.2

Sensor Offset

Probe Tip to Sensor Center **1.0** mm

The reported uncertainty of measurement is stated as the standard uncertainty of measurement multiplied by the coverage factor k=2, which for a normal distribution corresponds to a coverage probability of approximately 95%.

[A] The uncertainties of NormX,Y,Z do not affect the E^2-field uncertainty inside TSL (see Page 8).

[B] Numerical linearization parameter: uncertainty not required.

UL Apex Co., Ltd.
Head Office EMC Lab.
4383-326 Asama-cho, Ise-shi, Mie-ken 516-0021 JAPAN
Telephone: +81 596 24 8116
Facsimile: +81 596 24 8124

EX3DV3 SN:3507

May 26, 2006

Frequency Response of E-Field

(TEM-Cell:ifi110 EXX, Waveguide: R22)

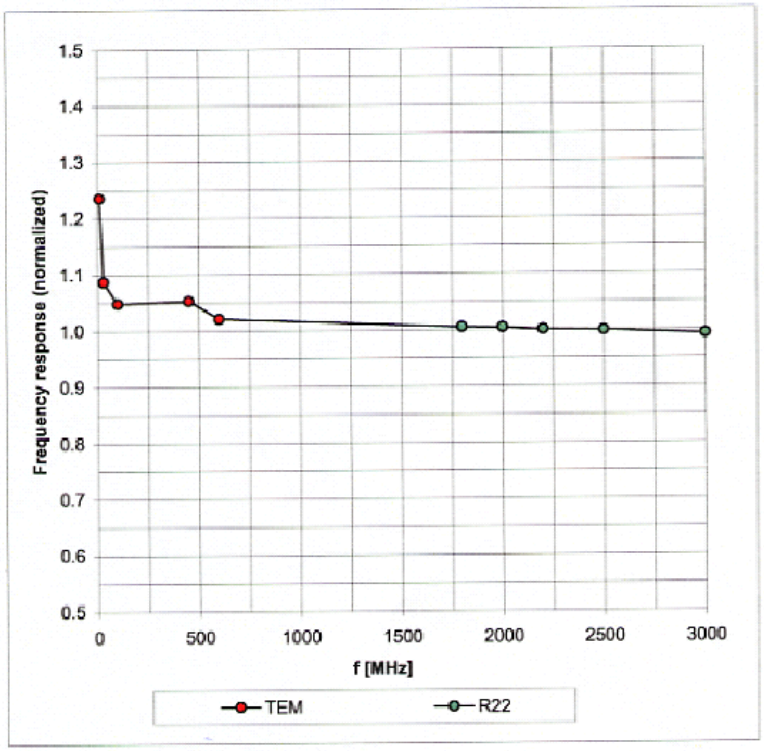

Uncertainty of Frequency Response of E-field: ± 6.3% (k=2)

Certificate No: EX3-3507_May06

Page 5 of 9

EX3DV3 SN:3507 May 26, 2006

Receiving Pattern (ϕ), ϑ = 0°

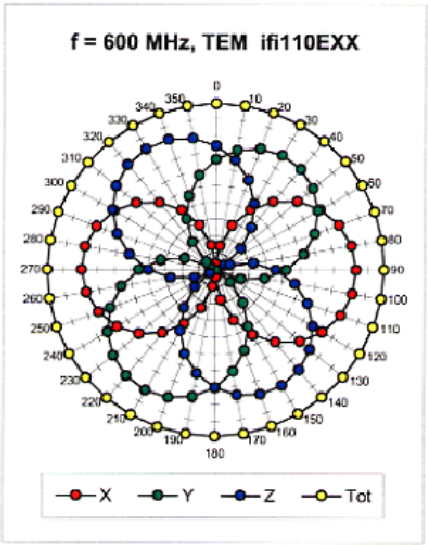

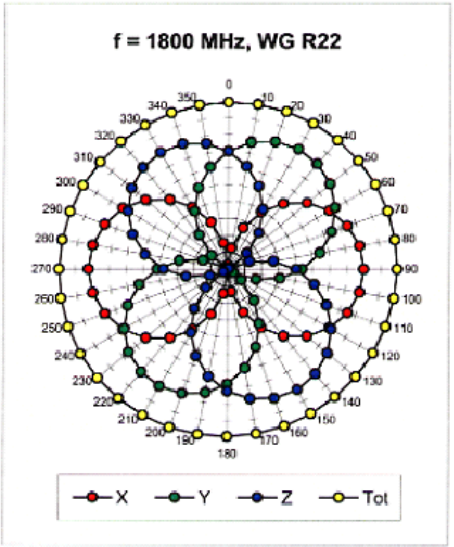

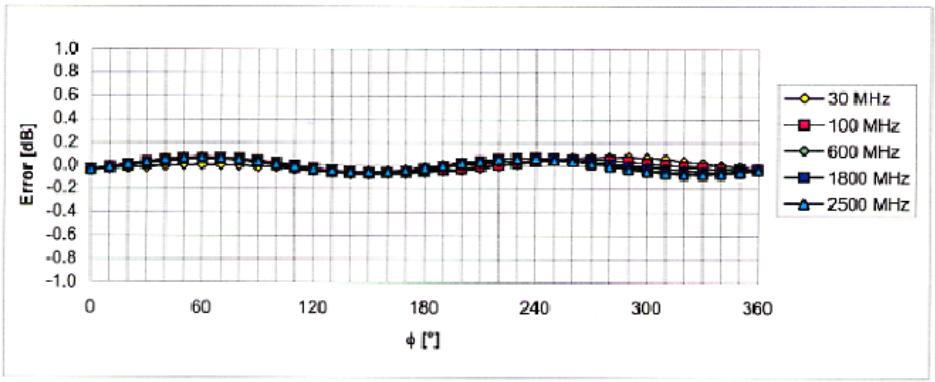

Uncertainty of Axial Isotropy Assessment: ± 0.5% (k=2)

UL Apex Co., Ltd.
Head Office EMC Lab.
4383-326 Asama-cho, Ise-shi, Mie-ken 516-0021 JAPAN
Telephone: +81 596 24 8116
Facsimile: +81 596 24 8124

EX3DV3 SN:3507 May 26, 200

Dynamic Range f(SAR_{head})

(Waveguide R22, f = 1800 MHz)

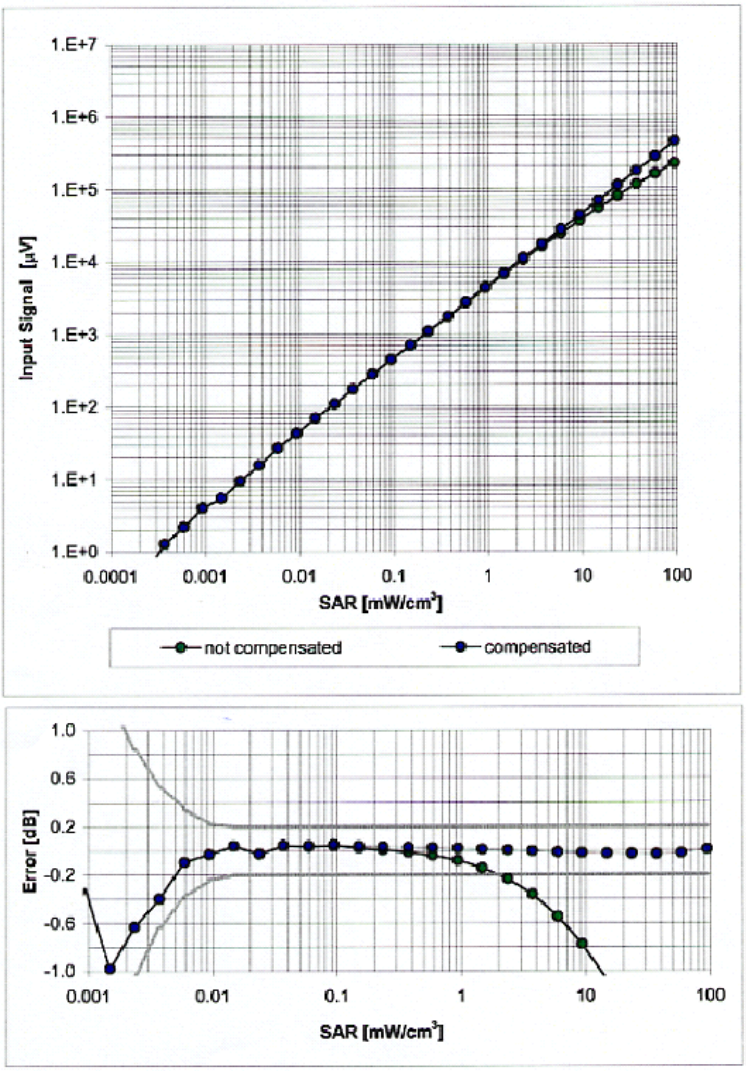

Uncertainty of Linearity Assessment: ± 0.6% (k=2)

Certificate No: EX3-3507_May06 Page 7 of 9

EX3DV3 SN:3507 May 26, 2006

Conversion Factor Assessment

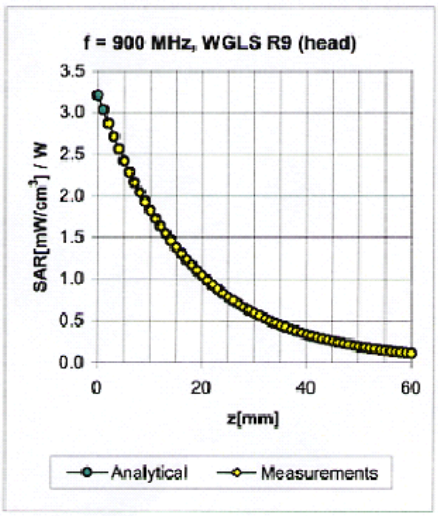

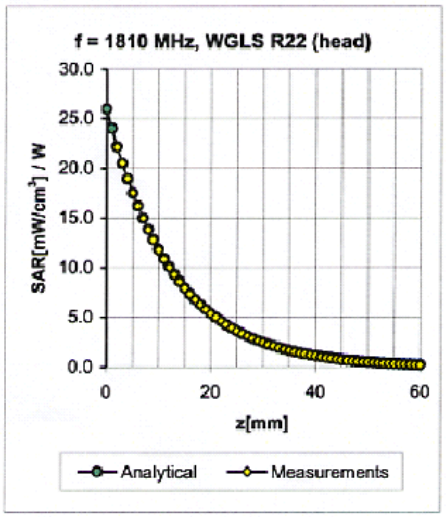

f [MHz]	Validity [MHz][c]	TSL	Permittivity	Conductivity	Alpha	Depth	ConvF	Uncertainty
450	± 50 / ± 100	Head	43.5 ± 5%	0.87 ± 5%	0.37	0.74	10.80	± 13.3% (k=2)
900	± 50 / ± 100	Head	41.5 ± 5%	0.97 ± 5%	0.21	1.03	10.62	± 11.0% (k=2)
1810	± 50 / ± 100	Head	40.0 ± 5%	1.40 ± 5%	0.45	0.70	9.28	± 11.0% (k=2)
2450	± 50 / ± 100	Head	39.2 ± 5%	1.80 ± 5%	0.51	0.74	8.26	± 11.8% (k=2)
5200	± 50 / ± 100	Head	36.0 ± 5%	4.66 ± 5%	0.30	1.80	5.31	± 13.1% (k=2)
5500	± 50 / ± 100	Head	35.6 ± 5%	4.96 ± 5%	0.30	1.80	4.95	± 13.1% (k=2)
5800	± 50 / ± 100	Head	35.3 ± 5%	5.27 ± 5%	0.30	1.80	4.82	± 13.1% (k=2)
450	± 50 / ± 100	Body	56.7 ± 5%	0.94 ± 5%	0.47	0.50	11.90	± 13.3% (k=2)
900	± 50 / ± 100	Body	55.0 ± 5%	1.05 ± 5%	0.66	0.62	10.46	± 11.0% (k=2)
1810	± 50 / ± 100	Body	53.3 ± 5%	1.52 ± 5%	0.35	0.95	8.83	± 11.0% (k=2)
2450	± 50 / ± 100	Body	52.7 ± 5%	1.95 ± 5%	0.51	0.74	8.24	± 11.8% (k=2)
5200	± 50 / ± 100	Body	49.0 ± 5%	5.30 ± 5%	0.28	1.90	4.91	± 13.1% (k=2)
5500	± 50 / ± 100	Body	48.6 ± 5%	5.65 ± 5%	0.28	1.90	4.61	± 13.1% (k=2)
5800	± 50 / ± 100	Body	48.2 ± 5%	6.00 ± 5%	0.25	1.90	4.77	± 13.1% (k=2)

[c] The validity of ± 100 MHz only applies for DASY v4.4 and higher (see Page 2). The uncertainty is the RSS of the ConvF uncertainty at calibration frequency and the uncertainty for the indicated frequency band.

UL Apex Co., Ltd.
Head Office EMC Lab.
4383-326 Asama-cho, Ise-shi, Mie-ken 516-0021 JAPAN
Telephone: +81 596 24 8116
Facsimile: +81 596 24 8124

EX3DV3 SN:3507

May 26, 2006

Deviation from Isotropy in HSL

Error (ϕ, ϑ), f = 900 MHz

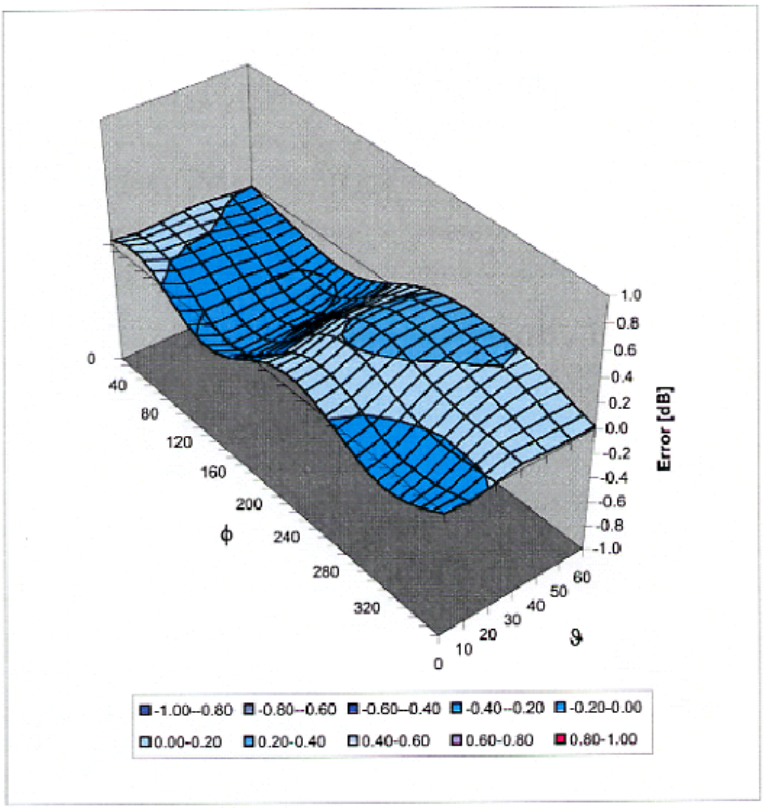

Uncertainty of Spherical Isotropy Assessment: ± 2.6% (k=2)

UL Apex Co., Ltd.
Head Office EMC Lab.
4383-326 Asama-cho, Ise-shi, Mie-ken 516-0021 JAPAN
Telephone: +81 596 24 8116
Facsimile: +81 596 24 8124

13. References

[1]ANSI, ANSI/IEEE C95.1-1992: IEEE Standard for Safety Levels with Respect to Human Exposure to Radio Frequency Electromagnetic Fields, 3 kHz to 300 GHz, The Institute of Electrical and Electronics Engineers, Inc., New York, NY 10017, 1992.
[2] Katja Pokovic, Thomas Schmid, and Niels Kuster, "Robust setup for precise calibration of E-field probes in tissue simulating liquids at mobile communications frequencies", in ICECOM '97, Dubrovnik, October 15-17, 1997, pp. 120-124.
[3] Katja Pokovic, Thomas Schmid, and Niels Kuster, "E-_field probe with improved isotropy in brain simulating liquids", in Proceedings of the ELMAR, Zadar, Croatia, 23-25 June, 1996, pp.172-175.
[4] W. Gander, Computermathematik, Birkhaeuser, Basel, 1992.
[5] W. H. Press, S. A. Teukolsky,W. T. Vetterling, and B. P. Flannery, Numerical Recepies in C, The Art of Scientific Computing, Second Edition, Cambridge University Press, 1992.
[6]SPEAG uncertainty document for DASY 4 System from SPEAG (Shimid & Partner Engineering AG).
[7]SPEAG uncertainty document for "the 5-6GHz Extension" from SPEAG (Shimid & Partner Engineering AG).