USER'S GUIDE

47266362.00-108

DRAFT

SDA1250C Frequency Agile, 12.5 Watt Transmitter

THOMCAST
COMMUNICATIONS Inc.
COMWAVE DIVISION

Figure 1: SDA1250C Transmitting System.

This is an unpublished work protected by United States copyright laws and is proprietary to Thomcast Communications, Inc. Disclosure, copying, reproduction, merger, translation, modification, enhancement or use by anyone other than authorized employees or licensees of Thomcast Communications, Inc. without the prior written consent of Thomcast Communications, Inc. is prohibited.

Copyright (c) 2000 Thomcast Communications, Inc. All rights reserved

This copyright notice should not be construed as evidence of publication.

All information contained in this document is confidential and proprietary to THOMCAST and shall not be disclosed without the prior written permission of THOMCAST.

CREATED: KAS..... 0612/00 | *CHECKED: DMW .....06/12/00* | *RELEASED: PRC.....0612/00*

Document #: DOC33-0051 *REV: JUN.12.00*

TABLE OF CONTENTS

TITLE ***DOCUMENT #***
Warranty Information DOC12-0001

SECTION 1
Provides information describing the system and how it works

Top Level Description DOC13-0178
Specifications 47266362.00-306

SECTION 2
Provides information to assist in setting up and turning on your system

Installation Procedure DOC17-0035
Safety Practices and Guidelines DOC26-0031
Cabling DOC17-0036
External Interconnections DOC30-0043
ComView Status Monitoring Interconnections DOC30-0005
Turn-On Procedure DOC26-0050

SECTION 3
Provides information to help with troubleshooting

Recommended Test Equipment DOC25-0007
Troubleshooting DOC18-0073
Node Addresses DOC22-0019
Troubleshooting Worksheet DOC18-0072
Equipment Fusing and Protection DOC18-0075
Power Supply Plug-In Fusing and Protection DOC18-0071
Maintenance DOC18-0074
Inspections and Cleaning
Calibrations DOC16-0057

SECTION 4
Provides information about individual segments of the system.

We recommend you contact Thomcast[1] customer service when repairs are necessary; please do not attempt to repair any modules and/or boards by yourself.

Sub-Chassis Theory of Operation DOC14-0037

Microcontroller Board Description (hardware) DOC13-0175

Upconverter Plug-In Module Theory of Operation DOC14-0039
Front and Rear Panel Descriptions
Specifications 47266116.00-306
Block Diagram 47266116.00-034
Microwave Precorrector Module DOC13-0177
Internal Interconnect 47266116.00-050

[1] DOC20-0001 provides detailed contact information. International phone 001-570-474-6751, USA & Canada phone 1-800-266-9283.

All information contained in this document is confidential and proprietary to THOMCAST and shall not be disclosed without the prior written permission of THOMCAST.

U/C Plug-In Module MCU State Machine, Firmware Description DOC13-0187
U/C Plug-In Module Firmware Description DOC13-0188

LO Plug-In Module Theory of Operation DOC14-0038A
Agile Synthesizer Drawer Manual DOC33-0037
Specifications 47266052.00-306
Block Diagram 47266183.00-034
Internal Interconnect 47266183.00-050
LO Plug-In Firmware Description DOC13-0184

Power Supply Plug-In Module Theory of Operation DOC14-0036
Front and Rear Panel Descriptions
Specifications 47266099.00-306
Block Diagram 47266099.00-034
Internal Interconnect 47266099.00-050
Power Supply Plug-In Embedded Controller DOC13-0173
System Controller Firmware DOC13-0185

Power Amplifier Segment Theory of Operation DOC14-0008
Amplifier Segment State Flow Diagram DOC21-0006
Firmware Flowchart DOC21-0005
Internal Interconnect 66-306-01

SECTION 5
Provides contact & return information, as well available options.

Customer Service DOC20-0001
Power Amp Segment Return Packaging DOC20-0002

All information contained in this document is confidential and proprietary to THOMCAST and shall not be disclosed without the prior written permission of THOMCAST.

THOMCAST COMMUNICATIONS, COMWAVE DIVISION TWO YEAR LIMITED WARRANTY

Thomcast warrants each product of its manufacture to be free from any defect in material and workmanship for a period of two years after delivery to, and return by the original purchaser. No returns, however, will be accepted unless accompanied by a written factory return authorization.

The limit of liability under this warranty shall be to repair or replace any product, or part thereof, which proves to be defective after inspection by Thomcast with the exception of tubes, semiconductor devices, lamps, fuses or equipment (i.e. modulators) manufactured by others, which are subject to only such loss adjustment as Thomcast may obtain for the suppliers thereof.

This warranty shall not apply to any Thomcast product which has been modified, physically or electrically damaged, or to modules which seals have been broken, or any product which has been subjected to conditions exceeding the applicable specifications or ratings or improper service techniques.

Thomcast will not be liable for any direct or consequential injury, loss or damage incurred through the use, or the inability to use, any Thomcast product.

Thomcast reserves the right to make design changes to any Thomcast product without incurring any obligation to make the same changes to previously purchased units.

This warranty is the full extent of the obligation and liability assumed by Thomcast with respect to any and all Thomcast products. Thomcast neither makes, nor authorizes any person to make, any other guarantee or warranty concerning Thomcast products.

All information contained in this document is confidential and proprietary to THOMCAST and shall not be disclosed without the prior written permission of THOMCAST.

SECTION 1

PREVIOUS
Print

TOP LEVEL DESCRIPTION

The high power (HPSC) transmission system, both single channel and agile versions generate a digitally modulated average power signal on any one of the PCS, MDS, MMDS, ITFS, or WLL channels. The SD1250C / SDA1250C generates 1-12.5 watts average power while the SD2500C / SDA2500C generates 2-25 watts average power and the SD5000C / SDA5000C generates 5-50 watts average power[1] using a QAM modulation scheme. The system architecture is based on advanced transistor technology, low loss power combining, and distributed control and power conversion. Some unique advantages of this new design are flexibility/scalability, lower downtime, and lower operating costs. The modular structure of this system allows for quick and easy replacement of malfunctioning plug-in modules, which means less downtime and convenient scalability. The high efficiency design and small size decreases operating expenses.

The transmitting system consists of a sub-chassis, upconverter plug-in module, LO plug-in module and/or agile synthesizer drawer, power supply plug-in module, a front-end power supply, and power amplifier segments. Digital transmission techniques provide superior performance over analog methods, with reduced susceptibility to noise and co-channel interference. Advanced quadrature amplitude modulation provides exceptional throughput and spectral efficiency. The RF signal path of the system is shown below in Figure 1 and the system AC/DC power distribution is depicted in Figure 3.

This upgradeable series of transmitters provides maximum space efficiency and a modular system architecture. This allows the transmitter to be easily upgraded from 2 watts, using from one to four power amplifier segments at 12.5 watts each, to a total of 12.5, 25, or 50 watts average output power, depending on model. Similarly, it may also be downgraded; and, the power amplifier segments may be used elsewhere or kept as spares for hot replacement. As the output power is modified, the model name and FCC identifier will change respectively. The FCC ID label will be replaced with each upgrade, as needed; refer to Figure 2 for label location.

One of the most prevalent user benefits of this series of transmitters is hot replacement, i.e. should a power amplifier segment be operating below parameters and need replaced, hot replacement allows the transmitter to continue operating with only slight power loss and little to no change in the noise floor. Similarly, should a plug-in module need replaced only a brief interruption will occur when it is removed and transmission will continue as soon as the replacement is plugged-in.

[1] For modulation schemes other than QAM the output power may need to be derated to keep the spectral occupancy according the FCC rules.

All information contained in this document is confidential and proprietary to THOMCAST and shall not be disclosed without the prior written permission of THOMCAST.

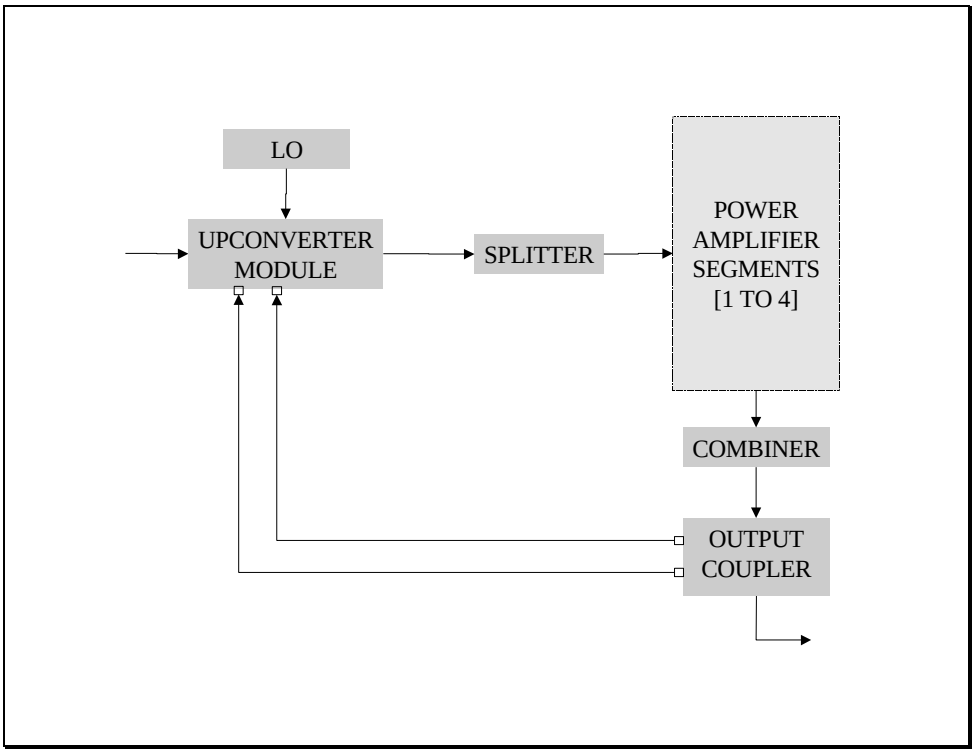

Figure 1: System RF signal path.

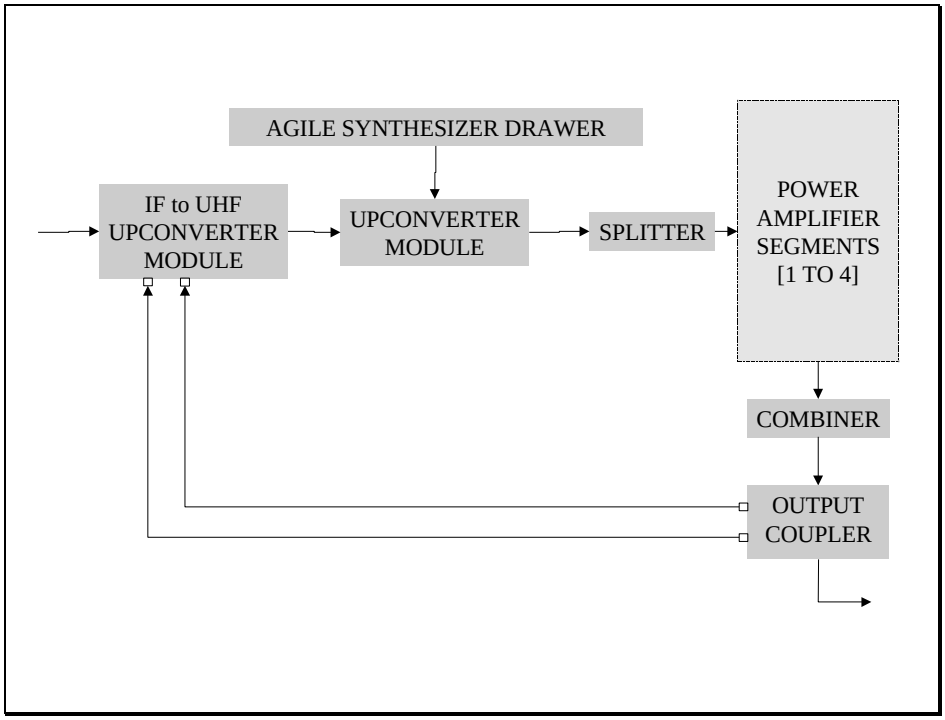

Figure 2: Agile system RF signal path.

All information contained in this document is confidential and proprietary to THOMCAST and shall not be disclosed without the prior written permission of THOMCAST.

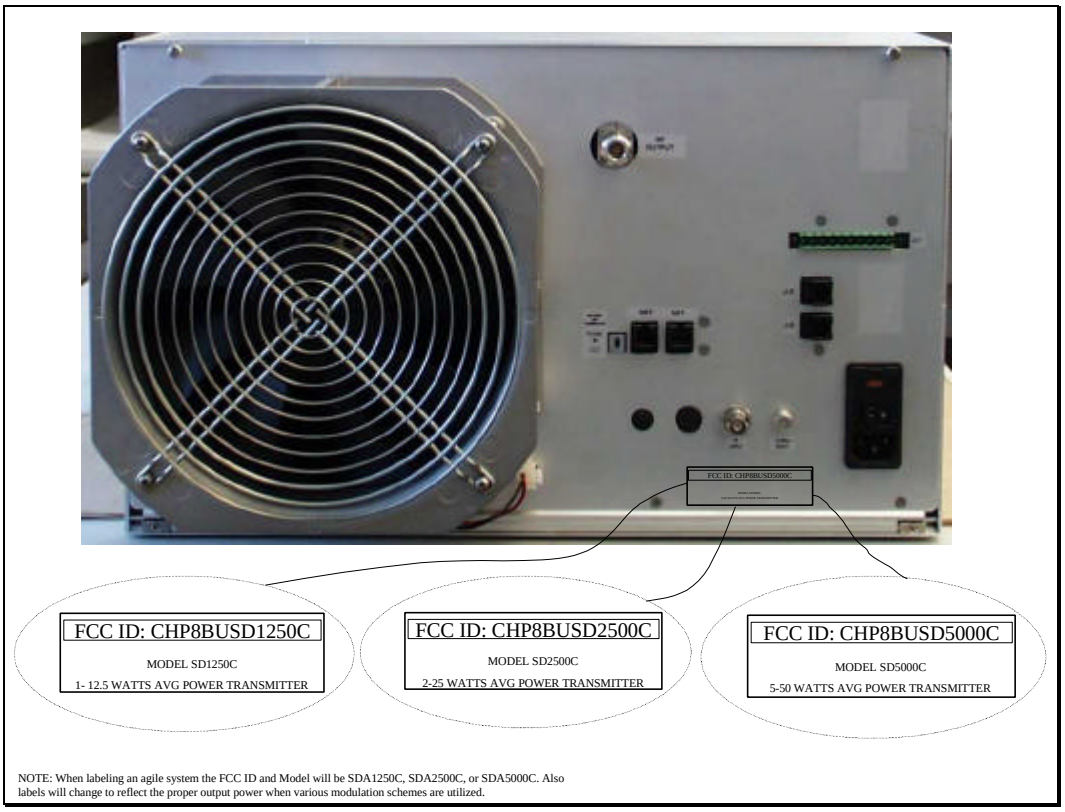

Figure 3: Location of FCC ID label.

All information contained in this document is confidential and proprietary to THOMCAST and shall not be disclosed without the prior written permission of THOMCAST.

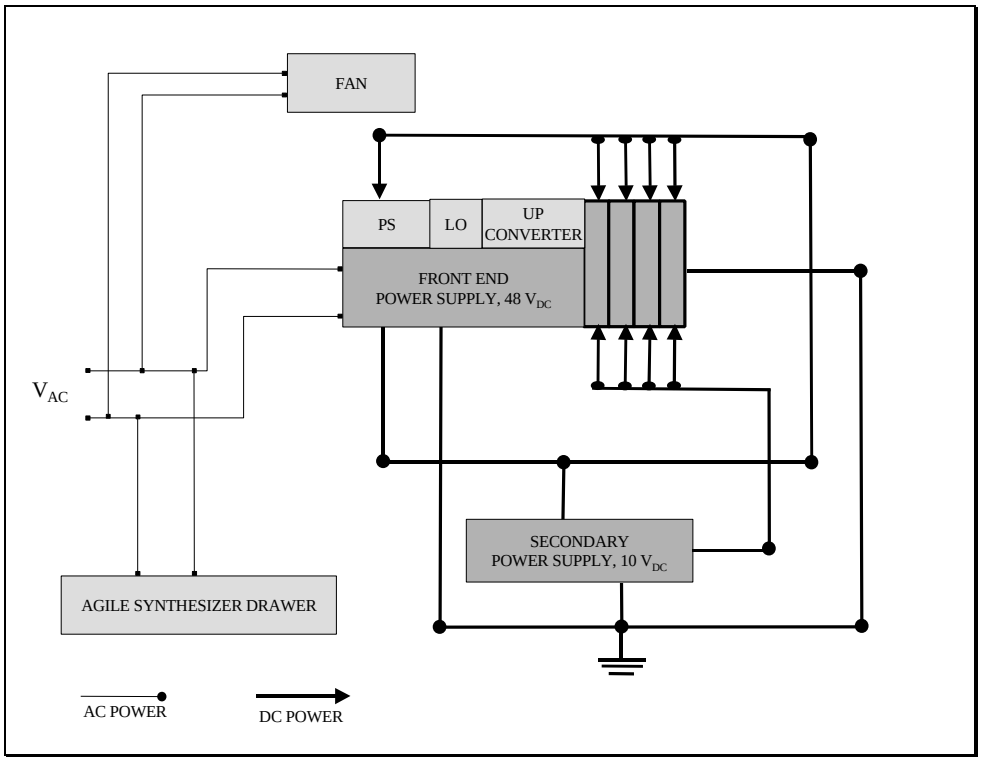

Figure 4: AC and DC power distribution.

All information contained in this document is confidential and proprietary to THOMCAST and shall not be disclosed without the prior written permission of THOMCAST.

SDA1250C TRANSMITTING SYSTEM SPECIFICATIONS

Parameter	*Specification*	*Notes / Test Conditions*
	DIGITAL	
Average Output Power	1 - 12.5 Watts	2^{23}-1 PN data sequence (at transmitter output)
IF Input Frequency	44 MHz	Other frequency options available
Impedance/Connector Input Output	 75 Ω/BNC-female 50 Ω/N-female	
Average Input Power	-15 dBm ± 0.5 dB	2^{23}-1 PN data sequence (at transmitter output)
Output Frequency	1850 - 3600 MHz	In select bands
Frequency Response[1]	= ±0.25 dB	F_C ±2.6 MHz Measured at channel combiner output
Frequency Stability	= ±500 Hz = ±1 Hz (Optional GPS)	
Carrier to Noise (C/N)	= 55 dB	
Hum and Noise	= -60 dBc	
Group Delay[2]	= ±15 ns	F_C ±2.6 MHz Measured at channel combiner output
Digital Modulation Error Vector Magnitude [2, 2] (EVM)	= 2.0%	64-QAM/8-VSB @ 5.06 Msps RMS average over 12,500 symbols Measured at channel combiner output
Digital Modulation Signal to Noise Ratio [2,3] (SNR)	= 30 dB	64-QAM/8-VSB @ 5.06 Msps RMS average over 12,500 symbols Measured at channel combiner output
Magnitude Linearity (AM-AM conversion)	= ±0.125 dB	Measured at channel combiner output
Phase Linearity (AM-PM conversion)	= ±0.75°	Measured at channel combiner output
Adjacent Channel Interference[3], [4] (FCC ATV Spectral Mask)	Sidelobe power spectral density (PSD) = -38 dB at channel edge; decreasing to = -60dB at ±3 MHz from channel edge	Relative to in-band average PSD measured @ 100 KHz RBW at the channel combiner output
Harmonics[5]	= -60 dBc	Relative to unmodulated carrier power measured @ 100 KHz RBW at the channel combiner output
Spurious Products[6]	= -60 dBc	Relative to unmodulated carrier power measured @ 100 KHz RBW at the channel combiner output
RF Output Regulation	= ± .2 dB	Measured at transmitter output
Channel to Channel RF Output Regulation	= ± 0.35 dB	Worst case channel to channel output power variation

[1] *Upconverter amplifier drawer with optional group delay and frequency equalizer @ the output of the non-adjacent channel combiner.*
[2] *Or equivalent threshold BER measurement.*
[3] *Spectral occupancy per FCC ruling for both analog and digital*
[4] *Measured with a non-adjacent channel combiner, notch filter and optional IF equalizer module.*
[5] *Undesired signal power 2 dB higher than the nominal PSD of the adjacent spectral regions that is harmonically related to unmodulated carrier*
[6] *Undesired signal power 2 dB higher than the nominal PSD of the adjacent spectral regions that is harmonically related to internal system signals such as clock, LOs, etc.*

All information contained in this document is confidential and proprietary to THOMCAST and shall not be disclosed without the prior written permission of THOMCAST.

Parameter	*Specification*	*Notes / Test Conditions*
SSB Phase Noise Direct measurement of microwave LO	= -85 dBc/Hz @ 10 KHz offset = -110 dBc/Hz @ 10 KHz offset	Optional Standard (recommended for digital transmission)
ANALOG		
VISUAL PERFORMANCE		
Output Power	1 - 40 Watts Peak Sync	Adjustable from 10 to 100% of peak sync power
Output Frequency	Any 6, 7, or 8 MHz Channel	1850-3600 MHz In select bands
Emission	5M75C3F or per CCIR	
Impedance/Connector Input Output	 75Ω/F female 50Ω/N female	
Input Level	Video 1 VP-P ± 6dB	
IF Input Level Impedance/Connector	-8 dBm peak ± 2 dB 75Ω / female BNC	
Frequency Stability	= ± 500 Hz = ± 1 Hz (Optional GPS)	
Frequency Response[7], [8], [9]	= ± 1 dB	FCC Multiburst video pattern
Group Delay [8, 10]	Per FCC 73.687(a)(3) or per CCIR	Sin(x)/x video pattern
Harmonics	= -60 dBc	Measured in 30 KHz RBW at transmitter output relative to visual carrier (unmodulated carriers)
Spurious Products[8]	= -60 dBc (out of band)	Measured in 30 KHz RBW at transmitter output relative to visual carrier using 75% color bars video pattern
Intermodulation Distortion (IM3)[10]	= -60 dBc (in band)	Measured in 100 KHz RBW at transmitter output relative to visual carrier using red field video pattern
Differential Gain[8, 10]	= 3%	NTC-7 composite video pattern
Differential Phase[8, 10]	= 2°	NTC-7 composite video pattern
Sync Pulse Amplitude[8, 10]	= ±5%	NTC-7 composite video pattern
Luminance Non-linearity[8, 10]	= 3%	NTC-7 composite video pattern
Weighted SNR[8, 10]	= 55 dB	Quiet Line - Line 12
Hum and Noise[8, 10]	= 60 dB	
K Factor 2T[8, 10]	= 2%	NTC-7 composite video pattern
Incidental Carrier Phase[8, 10] Modulation (I.C.P.M.)	= 3°	NTC-7 composite video pattern
RF Output Regulation	= ± 0.2 dB	
SSB Phase Noise Direct measurement of microwave LO	= -85 dBc/Hz @ 10 KHz offset = -110 dBc/Hz @ 10 KHz offset	Standard Optional (recommended for digital transmission)

[7] *Using TVM-102 modulator.*
[8] *Spectral occupancy per FCC ruling for both analog and digital*
[9] *Factory video/audio performance test limits may include up to 50% of the test demodulator measurement uncertainty.*
[10] *In band intermodulation specification is based on 15 dB visual to aural ratio. Contact factory for specification change due to other ratios*

All information contained in this document is confidential and proprietary to THOMCAST and shall not be disclosed without the prior written permission of THOMCAST.

Parameter	*Specification*	*Notes / Test Conditions*
	AURAL PERFORMANCE	
Output Power[11]	15 dB visual/aural ratio +0.5 dB to -2 dB	Measured at transmitter output Other ratios available upon request
IF Input Level Impedance/Connector	-23 dBm peak ± 2 dB 75Ω / female BNC	Combined visual and aural
Emission	250KF3E or per CCIR	
Inter Carrier Frequency Accuracy	= ± 50 Hz relative to visual carrier	
Frequency Response[12], [13] Mono Stereo	 = ± 1 dB 30 Hz to 15 KHz = ± 1 dB 50 Hz to 105 KHz w/o pre-emphasis	
Pre-emphasis	50 or 75 microseconds (defeatable)	
Deviation	±25 KHz (System M/N) (±50 KHz Stereo) ±50 KHz (System B/G/D/K/I) NICAM and IRT Stereo compatible	
Harmonic Distortion[13, 14]	= 1%	
FM Noise[13, 14]	= -60 dB	
Audio Input Level[13] Mono @ ±25 KHz deviation Mono @ ±50 KHz deviation Stereo @ ±50 KHz deviation	 -10 to +10 dBm into 600Ω -10 to +10 dBm into 600Ω -10 to +10 dBm	
	GENERAL	
Power Requirement	117/230 V_{AC} ±10%; 50/60 Hz; =400[14] VA	
Operating Temperature	0°C to +50°C	Frequency stability and equipment functionality guaranteed
Specified Temperature Range	13° to +33°C	All Specified parameters guaranteed
Relative Humidity	95% non-condensing	
Vertical Rack Requirement	10.5”	Does not include modulator
Dimensions	10.5” H x 19” W x 29” D 26.67cm H x 48.26 cm W x 73.66 cm D	
Approximate Shipping Weight	76 lb (34.4 kg)	Fully loaded

TO VIEW SPECIFICATIONS OF INDIVIDUAL SEGMENTS OF THIS SYSTEM CLICK BELOW:

SUB-CHASSIS
POWER SUPPLY PLUG-IN MODULE
UPCONVERTER PLUG-IN MODULE
AGILE SYNTHESIZER DRAWER

[11] *In band intermodulation specification is based on 15 dB visual to aural ratio. Contact factory for specification change due to other ratios*
[12] *Using TVM-102 modulator*
[13] *Factory video/audio performance test limits may include up to 50% of the test demodulator measurement uncertainty.*
[14] *Switching power supply is power factor corrected.*

All information contained in this document is confidential and proprietary to THOMCAST and shall not be disclosed without the prior written permission of THOMCAST.

SECTION 2

PREVIOUS
Print

INSTALLATION

UNPACKING INFORMATION

While unpacking, carefully compare packing list with the equipment, checking for in-transit damage at the same time. Should any damage be noted, notify the freight carrier at once to file a freight claim. Do not discard any packing material until told to do so by the carrier. Also, notify Thomcast Communications Inc., Comwave Division of any damages or of missing materials from the shipment.

Retain original boxes and internal packing materials to adequately protect equipment to be returned to the factory for repairs, upgrades, or modifications.

ENVIRONMENTAL CONSIDERATIONS

The equipment can be safely operated in ambient temperatures of -30 to +50 degrees Celsius (-22 to +122 degrees Fahrenheit). However, moderate temperatures generally extend equipment life. Although the equipment may be operated with relative humidity of up to 95%, the equipment must be protected from conditions, which cause condensation within the equipment.

If a rear door is used to secure the rack cabinet, forced ventilation through the cabinet is required (600 cfm minimum per transmitter is recommended). An air or temperature interlock should be incorporated for protection against interruption of ventilation. The area should be kept dry and clean.

There should be sufficient space in front of the transmitter cabinet for the serviceman and test equipment. A minimum of 36” behind the cabinet should be free for rear cabinet access and air movement. Also, ample room must be available at the cabinet rear for cable placement.

SAFETY CONSIDERATIONS

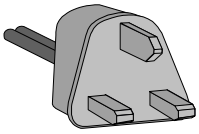

This equipment utilizes a grounding plug on all power cords. For personal safety, do not defeat this safety feature. As with all similar types of equipment, high voltage can be accessed when the chassis cover is removed. Special care should be given in areas of fuses, line switches, and power supplies.

Modern high power solid state equipment contains low output voltage power supplies with very high current capability. To prevent severe burns, avoid contact of rings, watches etc., with these circuits. When servicing the transmission line and antenna, care must be taken to avoid exposure to high-energy microwave.

PHYSICAL INSTALLATION

Mount the sub-chassis into the rack with the provided front panel screws; be sure to properly align the rear support. Slide each plug-in module into its location until it’s fully seated. Once plug-in is place, tighten the front panel thumb screws to assure that the plug-in remains securely in place and provide proper grounding. After all plug-ins are in securely in place, connect the LO output connector of the LO plug-in to the LO input connector of the upconverter plug-in via the SMA cable packed with the LO plug-in module.

The transmitter requires 10.5 inches of vertical rack space (not including a modulator). Generally, all equipment is mounted in close proximity in the same rack for the convenience of cabling.

All information contained in this document is confidential and proprietary to THOMCAST and shall not be disclosed without the prior written permission of THOMCAST.

INSTALLATION OF THE POWER AMPLIFIER SEGMENTS

The power amplifier segments slide into the sub-chassis on nylon slides and connect to the motherboard via floating connectors. The key-lock switch, located on the segment's front panel, must be in the OFF position in order to plug the segment in. This is to ensure that there is no arcing between connections before the segment is fully engaged. Once the segment is slid into place, thumbscrews on the segment's front panel are provided to secure it to the sub-chassis and to provide ground connection. The key-lock switch may now be turned to the ON position to apply power to the segment. Once the key-lock switch is turned on, the segment will automatically set the gain and currents of the amplifier.

SYSTEM GROUNDING

For proper system operation, it is imperative that the system be adequately grounded. Each individual equipment rack requires grounding to the main building ground. When bolting ground wires to racks, sand finish to remove paint ensuring a good bond.

All information contained in this document is confidential and proprietary to THOMCAST and shall not be disclosed without the prior written permission of THOMCAST.

FOR PUBLIC RELEASE

PROCEDURE

DOC26-0031

Safety Practices and Guidelines For Equipment Use and Handling

THOMCAST
COMMUNICATIONS Inc.
COMWAVE DIVISION

PREVIOUS

Print

This is an unpublished work protected by United States copyright laws and is proprietary to Thomcast Communications, Inc. Disclosure, copying, reproduction, merger, translation, modification, enhancement or use by anyone other than authorized employees or licensees of Thomcast Communications, Inc. without the prior written consent of Thomcast Communications, Inc. is prohibited.

Copyright (c) 1999 Thomcast Communications, Inc. All rights reserved

This copyright notice should not be construed as evidence of publication.

All information contained in this document is confidential and proprietary to THOMCAST and shall not be disclosed without the prior written permission of THOMCAST.

CREATED: KAS ..... 12/8/99 | *CHECKED: PRC ..... 12/10/99* | *RELEASED: DMW 01/03/00*

Document #: DOC26-0031 *REV: FEB.22.00*

TABLE OF CONTENTS

PURPOSE....3
APPLICABILITY....3
REFERENCES....3
RESPONSIBILITIES....3
SYMBOLIC CONVENTIONS....3
GENERAL INFORMATION....4
ELECTRICAL HAZARDS....4
EMERGENCY PROCEDURES....5
ELECTRICAL SAFETY FEATURES AND PRACTICES....6
PROCEDURES....6
HIGH TEMPERATURES....7
FIRE SAFETY....7
SAFETY PRACTICES....7
FIRE REPORTING....7
FIRE SAFETY DEVICES....7
USE OF FIRE EXTINGUISHERS....8
USE OF FIRE BLANKETS....8
RF RADIATION....8
BERYLLIUM OXIDE....8
HANDLING BERYLLIUM OXIDE....8
DISPOSAL OF BERYLLIUM OXIDE COMPONENTS....8
UNDAMAGED COMPONENTS....9
DAMAGED COMPONENTS....9

TABLE OF TABLES

Table 1: Fire classifications and extinguishing agents....7

All information contained in this document is confidential and proprietary to THOMCAST and shall not be disclosed without the prior written permission of THOMCAST.

PURPOSE

The purpose of this procedure is to supply Comwave customers with safety information for working with and handling equipment in order to avoid any catastrophic occurrences.

APPLICABILITY

This procedure is applicable to most high power transmission devices.

REFERENCES

DOC20-0001 Customer Support Documentation
DOC26-0052 CPR and First Aid Techniques
Transmitter specific technical manual, document number varies

RESPONSIBILITIES

It is the responsibility of each individual to use this information to it's full potential.

SYMBOLIC CONVENTIONS

The following headings may be found throughout this manual:

WARNING THIS HEADING BEFORE A PARAGRAPH WARNS THEOPERATOR OR TECHNICIAN THAT EXTREME CAUTIONSHOULD BE USED TO PREVENT DEATH OR SERIOUS INJURY.

CAUTION THIS HEADING BEFORE A PARAGRAPH CAUTIONS THE OPERATOR OR TECHNICIAN TO USE CARE TO PREVENT INJURY OR DAMAGE TO THE EQUIPMENT.

NOTE: This heading is used after a paragraph to highlight important information or procedures that must be obeyed for correct transmitter operation.

All information contained in this document is confidential and proprietary to THOMCAST and shall not be disclosed without the prior written permission of THOMCAST.

SYMBOLIC CONVENTIONS CONT'D.

There are some sections of the transmitting system that contain hazards during transmitter operation. The following symbols mark these potentially hazardous areas:

Dangerous electrical voltages may be present.

- This symbol is representative of the one found on your equipment; it may not be exact.

High heat may be present, be wary of burns and/or fires.

- This symbol is representative of the one found on your equipment; it may not be exact.

Radiation may be present.

- This symbol is representative of the one found on your equipment; it may not be exact.

GENERAL INFORMATION

Comwave transmitters are designed and manufactured to protect their operators and technicians from high voltage, heat, RF radiation, and other dangers. Generally, warning labels are attached to enclosures and/or assemblies to identify possible dangerous conditions. Comwave recommends that only skilled personnel be permitted to operate the transmitter; unskilled personnel must receive training that includes familiarization with safety practices and procedures before being permitted to operate the transmitter. Correct operation of this transmitter will not expose the operator to any danger.

ELECTRICAL HAZARDS

One of the most dangerous and common hazards when working with electricity is electrical shock. Electrical shock occurs when the body becomes part of the path of electrical current. Electricity takes the path of least resistance and depending on what your are wearing, where you are standing, and your size you may get a shock.

Shock can occur when working with both AC and DC voltages. DC currents up to .5 amps do not present a danger to human life however; the voltage can cause severe burns. Current more than .6 amps can cause severe shock, bums, and even death.

Even when working with AC voltage at standard frequencies (50-60 Hz) and intermediate voltages (72-600 V_{AC}) lethal current can flow through the body; voltages as low as 24 V_{AC} can be lethal under certain circumstances. At higher frequencies the danger of shock is less but Radio Frequency (RF) burns are possible.

As stated above, current flow follows the path of least resistance; there are many factors that determine if an electrical shock will be received and the severity of the injuries incurred. Below are some issues to consider when working with electricity:

All information contained in this document is confidential and proprietary to THOMCAST and shall not be disclosed without the prior written permission of THOMCAST.

WARNING

WARNING: THE PATH CURRENT TAKES IS CRITICAL. IF IT PASSES FROM HAND TO HAND OR HAND TO FOOT (ACROSS THE BODY) THE HEART, LUNGS, BRAIN, OR SPINAL CORD MAY BE AFFECTED, WHICH MAKES SERIOUS INJURY OR DEATH MORE LIKELY.

1) BODY RESISTANCE: The resistance of the body and the amount of insulation between the body and ground determine the amount of current that passes through the body. The skin provides the most natural resistance to current flow, however, *skin resistance decreases with voltage*.

2) LENGTH OF TIME EXPOSED TO ELECTRICAL CURRENT: If you are in the current path for any length of time, burning will occur; the longer your body is in contact with the current the more severe the injury. Burns break down the skin and lower its resistance making the body more vulnerable and more likely to receive severe shock.

   The duration of contact is critical when current flow through the body cause loss of muscle control, chest contraction (breathing is impaired), and ventricular fibrillation of the heart. During fibrillation the heart cannot pump sufficient quantities of blood.

3) MAGNITUDE: The size and/or quantity of an electrical shock is a major factor in determining the extent of loss of muscle control, effect on the heart, and severity of burns.

4) CURRENT PATH THROUGH THE BODY: As stated above, if the current flows from hand to hand or hand to foot, across the body, there is a high possibility that a vital organ will be affected. Wearing the proper clothing, as indicated below, will help prevent this.

5) AGE AND CONDITION OF VICTIM: The age and physical and emotional condition of the victim can also affect the severity of electrical shock. Elderly victims, or those with existing medical problems, are more susceptible to injury caused by electrical shock.

6) CLOTHING: Rubber has a very high resistance, thus, when working around electricity, rubber shoes and gloves should always be worn. Modern high power solid state equipment contain low output voltage power supplies with very high current capability. To prevent severe burns, avoid contact of rings, watch bands, etc., with these circuits. When servicing the transmission line and antenna, care must be taken to avoid exposure to high energy microwave.

7) ENVIRONMENT: Water is a very good conductor of electricity, therefore if you have wet hands or are standing in a puddle the chances of getting an electrical shock are EXTREMELY high, so, ALWAYS be sure to avoid water when working with electricity.

EMERGENCY PROCEDURES

If you hear “popping”, see sparks, or observe any other noticeable electrical defects that could result in electrical shock, report the conditions to your supervisor immediately.

If you receive any shock, immediately report it to your supervisor. Even though you may not feel that it hurt you, some problems, such as damage to the heart, can become evident several hours after the incident.

Personnel who operate and/or repair electrical equipment must be able to carry out the following:

1) Cut off the power to all sections of the work area.

2) Free a person from a live circuit; act quickly to minimize the danger.
   a) If a person is “frozen” to a live circuit, shut off the power, if you can get to it quickly. It is important to get the person away from the current as quickly as possible.

All information contained in this document is confidential and proprietary to THOMCAST and shall not be disclosed without the prior written permission of THOMCAST.

WARNING NEVER DIRECTLY TOUCH A PERSON THAT IS FROZEN TO AN ELECTRICAL CIRCUIT OR YOU MAY BECOME PART OF THE CIRCUIT TOO.

b) If you can not turn off the power, knock the person off the circuit using boards, sticks, or any other non-conductive material. You can also use a belt, dry rope, or some other article of clothing that is non-conductive.
c) Take care not to get pulled into or touch the person as you could easily become part of the current path.

3) Administer cardio-pulmonary resuscitation (CPR) as needed[1]. Always make sure the scene is safe for you to help before proceeding.
   - In order to be properly prepared and able to respond correctly is it highly recommended that a CPR training course be completed.

ELECTRICAL SAFETY FEATURES AND PRACTICES

Comwave equipment makes and uses voltages that can be lethal. Any area that has dangerous voltage present should be marked with an electrical warning label, as discussed earlier.

WARNING: USE APPROPRIATE PROCEDURES AND PRACTICES WHEN WORKING NEAR ELECTRICAL CIRCUITS.

WHEN OPENING A PANEL WITH A WARNING LABEL AND WORKING IN THAT AREA, BE EXTREMELY CAUTIOUS. HIGH MAIN POWER VOLTAGE IS PRESENT WHICH CAN CAUSE SERIOUS INJURY AND DEATH.

Transmitter assemblies are fully enclosed to protect you from high voltages, for further protection all equipment must be grounded. The installation guide for your equipment discusses grounding in more detail.

PROCEDURES

To further ensure protection while operating or performing maintenance on Comwave transmitters the following procedures must be adhered to:

1) Operate and maintain the transmitter in accordance with the appropriate manual(s). Observe and heed all warnings.

2) Permit only trained skilled personnel to operate the transmitter.

3) Ensure that power is not applied to the transmitter before trying to access areas that have electrical warning labels.

4) Use safety ground hooks to shunt any residual stored voltages to ground. Keep a safety-grounding hook attached to a ground point whenever your work on the transmitter.

5) Work in pairs when performing maintenance on electrical circuits.

6) Train all personnel in first aid[1] and CPR procedures.
   - In order to be properly prepared and able to respond correctly is it highly recommended that a first aid training course be completed.

[1] If you have access to the Internet the following sites offer information about first aid and CPR: http://www.amherst.edu/~jaloduca/cpr.html and http://www.amherst.edu/~cdsulliv/bruss/emer/menu.html. If you do not have Internet access, contact Comwave for DOC26-0052, which outlines the first aid and CPR steps found at the above mentioned sites.

All information contained in this document is confidential and proprietary to THOMCAST and shall not be disclosed without the prior written permission of THOMCAST.

HIGH TEMPERATURES

When high voltages are produced, some components generate high temperatures. If personnel come in contact with these areas they could receive severe burns, also, if flammable material is near a fire could break out.

FIRE SAFETY
Before a fire, learn the locations of the nearest fire alarm boxes, fire exits, alternate escape routes and fire extinguishers.

As with any hazard the best way to prevent damage, injury, or death is with solid safety practices. The table below lists the different fire classes and recommended extinguishing agent.

Table 1: Fire classifications and extinguishing agents.

MATERIAL INVOLVED	*FIRE CLASS*	*APPLICABLE FIRE EXTINGUISHER*
Wood, paper, textiles, other ordinary combustible material	A	Pressurized water, small fire hose, multipurpose dry chemical
Flammable liquids, oils, solvents, grease, paint, etc.	B	Dry chemicals, carbon dioxide
Energized electrical or electronic equipment	C	Dry chemicals, carbon dioxide. ***NEVER USE A SOLID STREAM OF WATER ON ELECTRICAL FIRES***.
Metals such as metal-organics, magnesium, aluminum, sodium, potassium, titanium, etc.	D	Special powder extinguishers

SAFETY PRACTICES
1) Always keep flammable material away from open flames or areas with high temperatures.
   - Even if there is no flame, flammable material can ignite when exposed to high temperatures.

2) Locate all fire alarm boxes, fire exits, fire extinguishers, and alternate fire exits and post their locations in several spots near the transmitter.

3) Equip each area with a fire blanket for personnel safety.

4) Contact the proper authorities AS SOON AS fire is detected, even before trying to extinguish it.

FIRE REPORTING
1) Report a fire as soon as it starts, call for help before trying to extinguish a fire.
   a) It’s better to have the fire taken care of when the fire department arrives then to find that you cannot control the fire and should’ve called for help.

2) Send someone to direct the fire department to the scene.

FIRE SAFETY DEVICES
When a fire erupts, the fire extinguisher is your first line of defense. It is imperative that an extinguisher be located in the area of the transmitter and that it is the correct type for the possible fire(s) that could erupt, see the table above.

In addition to the fire extinguisher a fire blanket should be near each work area; this is indispensable when clothing catches fire.

All information contained in this document is confidential and proprietary to THOMCAST and shall not be disclosed without the prior written permission of THOMCAST.

USE OF FIRE EXTINGUISHERS

Use the extinguisher to put out small fires before they begin to spread. Learn how to use the fire extinguishers in your area before a fire breaks out.

Fire extinguishers must be kept fully charged and should be inspected monthly to ensure proper operation. If you use an extinguisher, return it to its designated location and notify the appropriate authority to have it recharged.

Always place the extinguisher where it is easily accessible along normal paths of travel. Do not allow anything to block access to or obstruct the visibility of the extinguisher. Use signs or other methods to identify the locations of fire extinguishers not easily seen.

USE OF FIRE BLANKETS

Wrap the blanket around the person and roll them on the floor until the flames are smothered.

RF RADIATION

RF Radiation can cause severe burns and death; however, when correctly maintained and operated the transmitter does not produce enough non-ionizing (RF) Radiation to be a danger to personnel. RF radiation levels at all accessible locations in the transmitter will be less than 1mW/cm^2. Do not operate the transmitter if the RF radiation is measured at or suspected to be greater than lmW/cm^2.

Ensure that the transmitter is connected to the correct load or antenna and that all transmission lines and components are correctly installed with sufficient mechanical support and all covers and shields are in place.

Radiation detectors are available commercially for sensing hi RF levels. Comwave highly recommends the use of these devices around all transmission equipment; without a detector there is no way of knowing if RF radiation is present.

If RF radiation is detected cease operation immediately, shut down power, and inspect the above mentioned parts.

BERYLLIUM OXIDE

The RF transistors and RF terminations used in this equipment may contain wafers with Beryllium Oxide. Components that contain beryllium oxide can be handled without risk if they do not have any physical damage. If the component is damaged, beryllium oxide dust can be produced, which is toxic. The dust particles can be inhaled or become implanted in exposed skin.

IF YOU TRY TO TAKE APART A COMPONENT THAT CONTAINS BERYLLIUM OXIDE YOU CAN RELEASE BERYLLIUM OXIDE DUST, WHICH IS TOXIC.

HANDLING BERYLLIUM OXIDE

Wear disposable gloves when handling damaged components. Use dressings to cover cuts or abrasions to the skins where the dust might enter. If beryllium oxide dust gets on your skin, immediately wash the affected area then seek medical attention.

DISPOSAL OF BERYLLIUM OXIDE COMPONENTS

Obey the local disposal procedures, if there are none follow these procedures:

All information contained in this document is confidential and proprietary to THOMCAST and shall not be disclosed without the prior written permission of THOMCAST.

UNDAMAGED COMPONENTS

1) Put components in a polyethylene bag.
2) Seal the bag.
3) Put it in the beryllium oxide scrap box.
   - A beryllium oxide scrap box is a sealed metal container with a warning label on it.

DAMAGED COMPONENTS

1) Put disposable gloves on.
2) Use tweezers to put all visible pieces in a polyethylene bag.
3) Seal the bag.
4) Put it in the beryllium oxide scrap box.
5) Clean the area with a damp cloth.
6) Put the cloth and gloves in another polyethylene bag and seal it.
7) Put that bag in the scrap box too.
8) THOROUGHLY wash your hands.

All information contained in this document is confidential and proprietary to THOMCAST and shall not be disclosed without the prior written permission of THOMCAST.

SDxxxxC SERIES CABLING

This section explains cabling and interconnects for this series of transmitters. Refer to document # DOC30-0043 for pictorial.

SUB-CHASSIS REAR PANEL (TRANSMITTER):

- IF INPUT:
  An input signal is required for operation. Connect the IF INPUT of the transmitter to the IF OUTPUT of the modulator or other source. Use RG59/U 75 O cable.

- RF OUT:
  Cable the RF OUTPUT signal from the transmitter to the spectral shaping assembly, channel combiner, or notch filter. In an agile transmitter the RF OUTPUT is cabled to the spectral shaping assembly or the broadband input of the channel combiner network. Use ½-inch super flex cable.

- FREQ REF IN:
  An externally applied frequency reference signal is an option. This signal can originate from an optional reference drawer or from another transmitter that contains an internal reference oscillator, which can drive up to three additional transmitters. Use RG59/U 75 O cable.

FRONT PANELS:

Connect the LO output of the LO plug-in module to the LO input of the upconverter / amplifier plug-in module.

Figure 1: Cabling the LO signal.

COMVIEW INTERCONNECTIONS

ComView interconnections are achieved through six-conductor telephone cables with RJ-11 connectors at each end. The first cabling harness exits the PC and enters the ComView port on the rear of the transmitter, refer to DOC30-0043 for connector location.

In systems with multiple transmitters another harness is cabled from the net output of the first transmitter to the net input of the second transmitter. This daisy chain effect continues to the last transmitter in the rack. At the last transmitter in the rack the termination switch is put in the “term” position. Refer to the system interconnect diagram, document # DOC30-0005, for more detail on daisy chain cabling.

All information contained in this document is confidential and proprietary to THOMCAST and shall not be disclosed without the prior written permission of THOMCAST.

EXTERNAL INTERCONNECTIONS, *SDxxxxC Series*

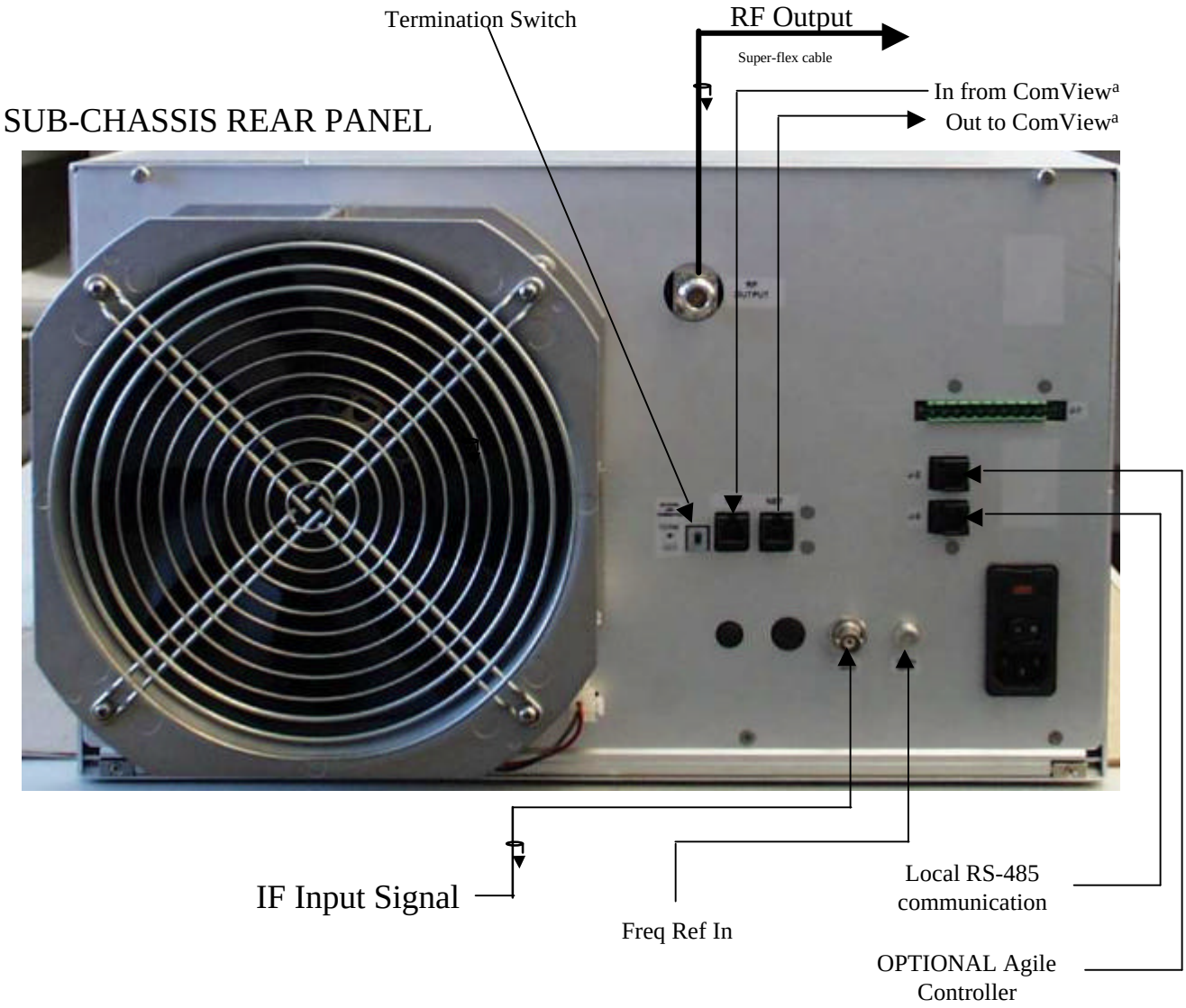

NOTES: a) These are interchangeable.

All information contained in this document is confidential and proprietary to THOMCAST and shall not be disclosed without the prior written permission of THOMCAST.

COMVIEW STATUS MONITORING INTERCONNECTIONS

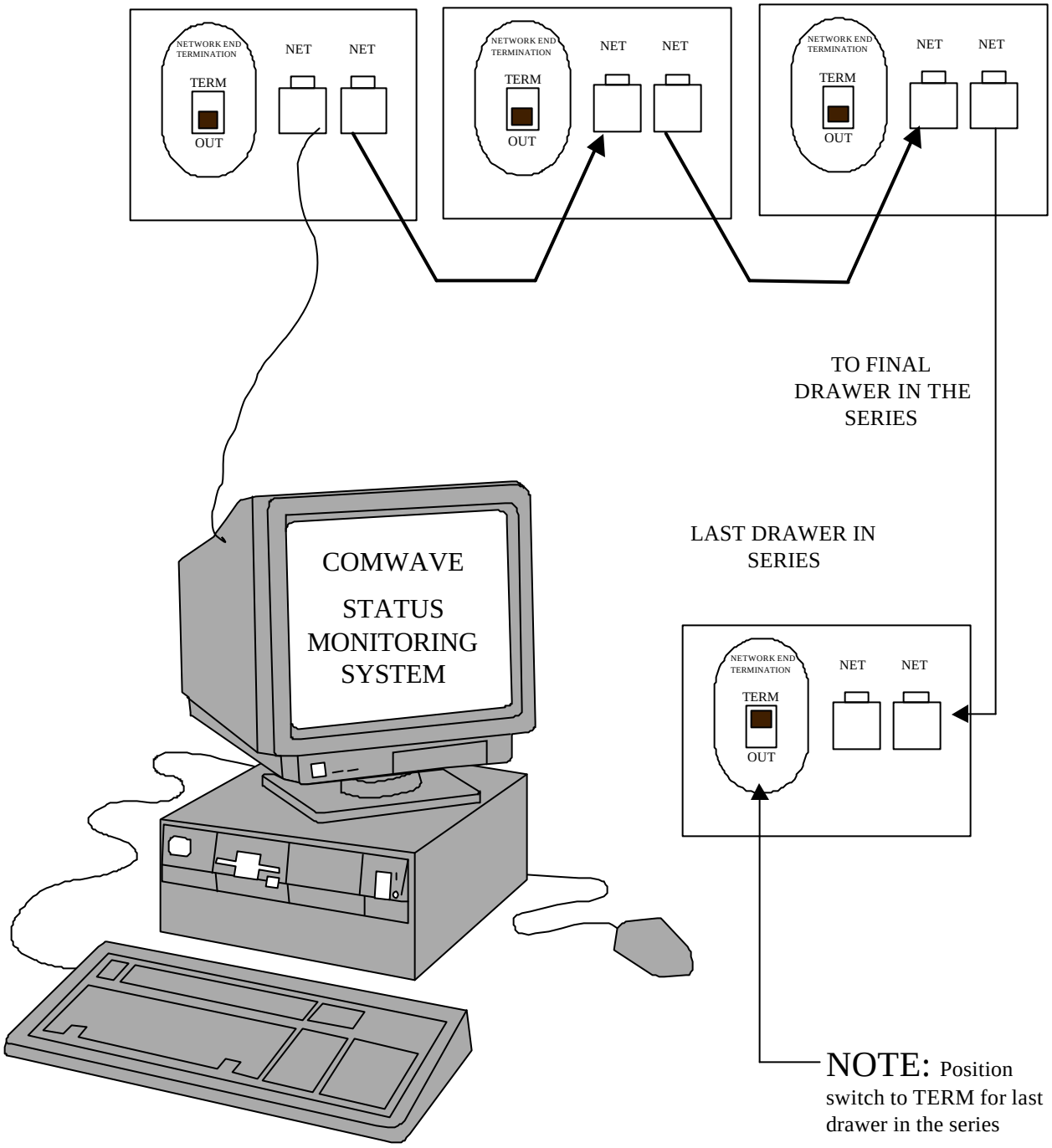

All information contained in this document is confidential and proprietary to THOMCAST and shall not be disclosed without the prior written permission of THOMCAST.

TURN-ON PROCEDURE

INITIAL TURN-ON PROCEDURE

1. Plug the AC line in.
2. Ensure all external interconnections are appropriately connected.
3. Turn the power switch on the rear of the transmitter to the "ON" position.
4. All modules perform an automatic start up program.

- Upconverter Plug-in Module
  A lamp test operation is performed. All chassis front panel LED's are illuminated for approximately 1 second then darkened. The lamp test allows a quick verification that all front panel LED's are functioning. In addition, the lamp test is a clear outward sign that the MCU board is receiving power, is executing the firmware program, and has recovered from RESET. Shortly after the lamp test, the LED's will display chassis status as determined by firmware tests. Document # DOC13-0188 discusses the firmware in more detail.

- LO Plug-in Module
  When the LO module is turned on, the code executes an initialization process. This process provides a lamp test, and displays the channel number on the front panel eight-segment LED display. An internal reference is adjusted to operational frequency, and the synthesizer chip is programmed with the operational frequency that was previously set into the microprocessor's non-volatile memory. Additionally, the working arrays and structures of the application are set into RAM. After the initialization program completes, the code enters a simple state machine to judge and operate the LO module. Document # DOC13-0184 discusses the firmware in more detail.

- Power Supply Plug-in Module
  When power is initially supplied to the power supply module a lamp test is performed. The two front panel LED's will flash on then off, after which the LED's remain lit, verifying operation.

5. Once the start up program is complete the equipment is functional.

NORMAL OPERATION

The following LED's confirm normal operation:

LO plug-in module
- DC POWER – continuously illuminated green
- LO Ø LOCK - unlit

Power supply plug-in module
- POWER - continuously illuminated green
- DC POWER - continuously illuminated green

Refer to the troubleshooting section of this manual for more information about the above LED's.

All information contained in this document is confidential and proprietary to THOMCAST and shall not be disclosed without the prior written permission of THOMCAST.

Power Amplifier Segment

Operation is accomplished by turning the key-lock switch to the "ON/LOCKED" position.

- The locks are an added safety feature; however, the keys are interchangeable.

The POWER/FAULT LED should continuously illuminate GREEN. If the LED flashes RED, the power amplifier segment has faulted. After three faults, a failure will occur and the segment will shut down. Turning the key-lock switch to the "OFF/UNLOCKED" position and then back to the "ON/LOCKED" position will reset it. Should failure occur again, hot replacement is necessary. Turn the key-lock switch to the "OFF/UNLOCKED" position and pull the failed segment out of the rack by the handle. Slide a new power amplifier segment into the vacant space, see the installation procedure for assistance, set the correct node address, see DOC22-0019, and turn the key-lock switch to the "ON/LOCKED" position.

All information contained in this document is confidential and proprietary to THOMCAST and shall not be disclosed without the prior written permission of THOMCAST.

SECTION 3

PREVIOUS
Print

RECOMMENDED TEST EQUIPMENT

The following test equipment can be substituted with other models in most cases; Comwave suggests that you use equipment that will produce equivalent or better results. An asterisk (*) represents the minimum equipment necessary; these items are required during the initial MMDS system set up and should be available at all times.

The remaining test equipment is useful for a variety of test and performance checks including verification of compliance with FCC rules and troubleshooting suspected problem areas or failures when used by qualified personnel.

Due to the many variables in maintenance and system requirements of television transmission systems, this list should only be used as a guide in your test equipment selection.

Table 1: Suggested test equipment.

MODEL	EQUIPMENT	TYPICAL USES
Tektronix TSG-100	*Video generator	Can be substituted for the normal program video to help determine a problem with the incoming video from either the satellite receiver or from off-air demodulation. Useful when comparing channels or when an unchanging video signal is required. May also be used to set modulation levels for the transmitter and the encoding system.
Fluke 87	*Digital voltmeter, 3 ½ digit	
HP 435B	10 MHz to 3 GHz power meter	Used in conjunction with various attenuators to measure power at various points throughout the transmitter when troubleshooting problems. Also verifies an MMDS transmitter is operating at the proper output power.
HP 8482H	Sensor for power meter	Used in conjunction with various attenuators to measure power at various points throughout the transmitter when troubleshooting problems. Also verifies an MMDS transmitter is operating at the proper output power.
HP 8594A Option 010 Option 301	Spectrum analyzer (with options) Tracking generator TV Sync trigger	Useful in measuring power, troubleshooting problems, comparing levels and setting modulation depths. In conjunction with a separate or built in sweep generator, it can measure VSWR of antenna/transmission line system. The ultimate piece of test equipment.
	*13” or larger color TV monitor/receiver	A cable ready TV receiver is required to insure that a good quality picture is being transmitted. A video monitor is essential in observing the quality of the signal received by either the satellite receivers or off-air demodulators prior to processing, scrambling, and converting to an MMDS channel for transmitting.
	*Oscilloscope, 10 MHz	Required along with a 75 Ω termination to properly set up the 1 volt P/P video required by the MMDS transmitter. Also a mandatory item when setting the encoder system. Very useful when troubleshooting system problems.
	*MMDS block down converter	Converts a sample of the MMDS signal that is being transmitted to a VHF signal required by the TV receiver of decoder.

All information contained in this document is confidential and proprietary to THOMCAST and shall not be disclosed without the prior written permission of THOMCAST.

MODEL	EQUIPMENT	TYPICAL USES
	*Decoder (type and model determined by type of encoding or scrambling system used)	Required between the block down converter and TV receiver to unscramble a scrambled signal.
Narda 3003-20	*20 dB “S” band directional coupler	Provides a reduced sample of the transmitted MMDS signal to various test instruments.
Narda 771-20	*20 dB microwave attenuator	Provides a reduced sample of the transmitted MMDS signal to various test instruments.
Narda 771-60	*60 dB microwave attenuator	Provides a reduced sample of the transmitted MMDS signal to various test instruments.
Narda 771-10	*10 dB microwave attenuator	Provides a reduced sample of the transmitted MMDS signal to various test instruments.
	*75 Ω terminations	
	*50 and 75 Ω cables	
	*Assorted BNC, N, RCA, and F type adapters	

All information contained in this document is confidential and proprietary to THOMCAST and shall not be disclosed without the prior written permission of THOMCAST.

SDxxxxC SERIES TROUBLESHOOTING

This series of transmitters is equipped with comprehensive diagnostic circuitry that monitors the status of each plug in module and power amplifier segments so failures can be readily detected. Observing the front panel LED diagnostic display, and ComView interface will inform you of the complete operational status. The following lists explain various failure mode displays and possible solutions.

A 14-pin computer type diagnostic interface connector, labeled J1, is located on the rear of the transmitter to assist in troubleshooting. Critical power supply, module, and motherboard voltage test points can be accessed/monitored at this location. Should a failure occur, the combination of diagnostic LED status lights, diagnostic interface voltage test points, and ComView should help identify the failure.

- Repair of internal modules is not recommended or advised. Contact[1] COMWAVE customer support should a failure occur.

LO PLUG-IN MODULE:

The LED's listed below continuously illuminate GREEN during normal operation. Absence of a green LED indicates a missing signal or parameter that results in a controlled automatic shutdown

DC POWER *(No power present)*		
CAUSES:	***CHECK FOR:***	***REMEDY:***
Plug-in module not seated properly	If LO plug-in module LED's are unlit, while the power supply plug-in LED's are lit	Remove LO plug-in and push firmly back in place
Power supply plug-in module malfunctioning	If LO AND power supply plug-in LED's are unlit	Remove the panel covering the front end power supply and check the LED's
Front end power supply malfunctioning	If the LED's indicate a problem, refer to Table 1 If no problem is indicated If the fuse is bad If the fuse is ok	Contact[1] Comwave customer support for a replacement Check the rear panel AC fuse Replace it Contact[1] Comwave customer support

Table 1: Front end power supply alarm indicators & control signals.

Description	*Signal*	*LED Indicator*
Output OK	Yes	Green
Supply Standby	Yes	Amber
Supply Fail	Yes	Red
Current Limit	Yes	Amber
Overvoltage	Yes	Red
Overtemp	Yes	Amber (same as Fan Fail LED indicator)
AC Undervoltage	Yes	NA
Fan Fail	Yes	Amber (same as Overtemp LED indicator)

[1] DOC20-0001 provides detailed contact information. International phone 001-570-474-6751, USA & Canada phone 1-800-266-9283.

All information contained in this document is confidential and proprietary to THOMCAST and shall not be disclosed without the prior written permission of THOMCAST.

The following LED's remain unlit until a malfunction is detected then they continuously illuminate RED. Loss of phase lock results in controlled automatic transmitter shut down.

LO Ø LOCK ***(Loss of phase lock)***	
CAUSES:	***REMEDY:***
Reference Level	Measure the reference level at the rear of the transmitter If the level is low: Check and tighten all external cables and harnesses associated with the LO If the level is OK or still low after checking the cables: Contact[2] Comwave customer support for a replacement

POWER SUPPLY PLUG-IN MODULE:

The LED's listed below continuously operate GREEN during normal operation. Absence of a green LED indicates a missing signal or parameter that results in a controlled automatic shutdown

POWER ***(No power present from the front end power supply)***	
CAUSES:	***REMEDY:***
Blown fuse, F1, in plug-in module	Replace fuse
No DC input from front end power supple	Check OEM power supply
Failure in plug-in module	Contact[2] Comwave customer support for a replacement

DC POWER ***(No output power)***	
CAUSES:	***REMEDY:***
Short circuit or current overload	Test 48 pin connector on back plane for short circuits Find plug-in module that is causing overload by swapping with like plug-in modules
Failure in plug-in module	Contact[2] Comwave customer support for a replacement

The upconverter / amplifier plug-in module LCD display provides operating information about each plug-in module, i.e. 'PASS' / 'FAIL', as well as a series of measurements, and user adjustments.

To view the status of each plug-in module perform the following steps:

1. Use the keypad on the upconverter / amplifier plug-in, choose select, when Status is displayed in LCD hit enter.

2. At this point you will be able to "select" the plug-in module of your choice.

3. When you've chosen the appropriate module the LCD will display either 'PASS' or 'FAIL'.

4. If it indicates the plug-in has failed, contact[2] Comwave for a replacement plug-in, there are no user troubleshooting steps for the plug-in modules.

[2] DOC20-0001 provides detailed contact information. International phone 001-570-474-6751, USA & Canada phone 1-800-266-9283.

All information contained in this document is confidential and proprietary to THOMCAST and shall not be disclosed without the prior written permission of THOMCAST.

If the Reflected Power measurement is high, check the following:

1. Output cable
2. Output Notch Filter (present at the output of the system)
3. Cable between Notch Filter and Channel Combiner (if present at the output of the system)
4. Connections to the antenna

If after ensuring the above are properly connected the problem persists, contact[3] Comwave customer support.

If the Forward Power measurement is low, check the following:

1. Check the power amplifier segment LED's; they should be green.
2. Check the status of each of the plug-in module via the keypad on the upconverter / amplifier plug-in front panel, see above for steps. They should all present a PASS condition.
3. If no amplifier segment or plug-in modules indicate a FAIL condition, use the keypad and LCD to display the IN-SIGNAL condition.
4. If the IN-SIGNAL status indicates a NO IN-SIGNAL condition, check the signal source.
5. If any power amplifiers segments and / or plug-ins have a FAIL condition, contact Comwave customer support to report the failure and receive a replacement.

POWER AMPLIFIER SEGMENT

Hot replacement of the power amplifier segment may be required if a failure occurs. To remove a segment, turn the key-lock switch to the OFF position, loosen the thumbscrews on the segment's front panel and slide the failed segment out of the sub-rack. Before the replacement segment can be installed, the node address must be set, refer to document # DOC22-0019. A set of DIP switches is accessible through the cover of each segment directly behind the key-lock switch. Set the DIP switches of the replacement segment to the same positions as the failed segment's DIP switches. Refer to the installation procedure for assistance when replacing power amplifier segments.

[3] DOC20-0001 provides detailed contact information. International phone 001-570-474-6751, USA & Canada phone 1-800-266-9283.

All information contained in this document is confidential and proprietary to THOMCAST and shall not be disclosed without the prior written permission of THOMCAST.

NODE ADDRESSES

1 to 16 Channels

MODULE POSITION	*NODE ADDRESS*	*NODE SWITCH SETTING*
1	**2**	ON / OFF 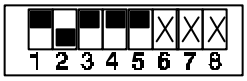
2	**3**	ON / OFF 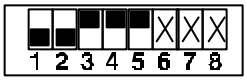
3	**4**	ON / OFF 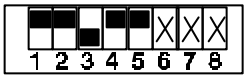
4	**5**	ON / OFF 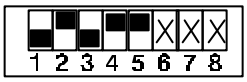
5	**6**	ON / OFF 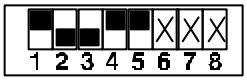
6	**7**	ON / OFF 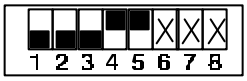
7	**8**	ON / OFF 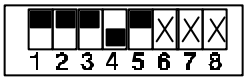
8	**9**	ON / OFF 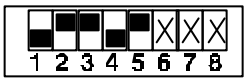
9	**10**	ON / OFF 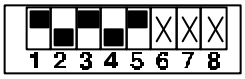
10	**11**	ON / OFF 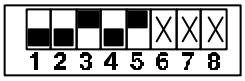
11	**12**	ON / OFF 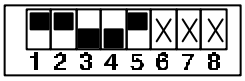
12	**13**	ON / OFF 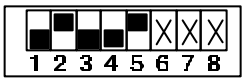
13	**14**	ON / OFF
14	**15**	ON / OFF 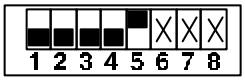
15	**16**	ON / OFF 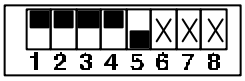
16	**17**	ON / OFF 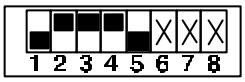

NOTE: Do not change node switch Settings 6, 7, and 8. They should remain as set by the factory.

All information contained in this document is confidential and proprietary to THOMCAST and shall not be disclosed without the prior written permission of THOMCAST.

TROUBLESHOOTING WORKSHEET

This troubleshooting worksheet identifies each interface pin, the associated internal test point, nominal value, and the expected voltage range. Please fill in all blank spaces completely

J1: Rear Panel Diagnostic Pin	*Function Checked*	*Measured Voltage*
1	Ground	
2	LO / Front-End Fault	
3	PS Fault	
4	Upconv Fault	
5	Sys Pwr	
6	REFL Pwr	
7	+48V Fault Input	
8	+10V Fault Input	
9	P.A.S. Reset	
10	P.A.S. Standby	
11	Amp Seg Fault	
12	+12V Output	
13	Insignal for Booster	
14	Ground	

FILL IN ALL THE ABOVE BLANK SPACES COMPLETELY

COMPANY NAME: _____ CUSTOMER'S NAME: _____
PHONE NUMBER: _____ FAX NUMBER: _____
MODEL: _____ CHANNEL: _____ SERIAL NUMBER (REAR PANEL): _____

SEND RESULTS TO: **THOMCAST COMMUNICATIONS, COMWAVE DIVISION ATTENTION TECHNICAL SUPPORT**

TOLL FREE PHONE (U.S.A. & Canada): 1-800-COMWAVE (1-800-266-9283)
International and U.S.A. 1-570-474-6751[1]
FAX 1-570-474-5469

[1] International calls must dial the country code before the phone number, i.e. 001-570-474-6751.

All information contained in this document is confidential and proprietary to THOMCAST and shall not be disclosed without the prior written permission of THOMCAST.

SDxxxxC SERIES TRANSMITTER FUSING AND PROTECTION

Resettable and replaceable fuses[1] are found in this system. Refer to the tables below for fuse locations and values.

Table 1: Transmitter fuse locations.

LOCATION	*REFERENCE*	*VALUE*
Rear Panel Interface Board - 47266066	F1	.5 ampere resettable
Rear Panel AC	Input	8 amperes @ 230 V_{AC}

Table 2: Power amplifier segment fuse locations.

LOCATION	*REFERENCE*	*VALUE*
Microcontroller board	F1, F2	.75 amperes resettable
Microcontroller board	F3	.30 amperes resettable
Microcontroller board	F4	.35 amperes resettable
DC - DC converter board	F1	10 amperes

Thermal Protection: Thermal protection is accomplished using temperature sensors within individual plug-in modules. The LO module does not have a temperature sensor. When the temperature exceeds 140° Fahrenheit (60° Celsius), the sensors inform the microcontroller which then takes the appropriate action, until the unit is sufficiently cooled.

Interlocks: Interlocks are performed via software applications, see individual plug-in modules firmware description for more information.

The OEM front end power supply offers the following:

Table 3: Front end power supply alarm indicators & control signals.

Description	*Signal*	*LED Indicator*
Output OK	Yes	Green
Supply Standby	Yes	Amber
Supply Fail	Yes	Red
Current Limit	Yes	Amber
Overvoltage	Yes	Red
Overtemp	Yes	Amber (same as Fan Fail LED indicator)
AC Undervoltage	Yes	NA
Fan Fail	Yes	Amber (same as Overtemp LED indicator)

[1] Replace only with the same type and rating.

All information contained in this document is confidential and proprietary to THOMCAST and shall not be disclosed without the prior written permission of THOMCAST.

POWER SUPPLY PLUG-IN FUSING AND PROTECTION

This module contains one replaceable fuse[1], refer to the table below for fuse location and value.

Table 1: Transmitter fuse locations.

LOCATION	*REFERENCE*	*VALUE*
DC converter board	F1	6 amperes @ 117/230 V_{AC}

CURRENT AND VOLTAGE MONITORING

Current sampling is accomplished by measuring the voltage drop across a resistor in series of the load. The voltages from both sides of the resistor are scaled down in order to keep the measured voltages from the supply voltages of the operational amplifiers. The voltage differences are first buffered, and then applied to an operational amplifier configured to measure the difference of the two input voltages.

The output of the differential amplifier is then applied to a non-inverting amplifier to increase the voltage near the middle of the system controller's 5 volt analog to digital converter's range. An integrated circuit containing Zener and Shottkey diodes protect the inputs of the system controller. The system controller compares this value against previously calibrated values to determine if the power supply is operating outside of specified parameters.

The input buffers for the current sampling also provide the voltage samples; the buffer's output is scaled down by dividing resistors. This provides a sample voltage to the analog to digital converters that is mid-rage between zero and five volts.

All of the power supply sections operate in a similar manner. The –12 V_{DC} power supply section uses inverting amplifiers (instead of buffers) with unity gain to convert the sample values to positive representations of the sampled voltages.

The current and voltage sample outputs are applied to an analog multiplexer integrated circuit. This chip selects the group of signals that are applied to the microprocessor from a control provided from the microprocessor.

TEMPERATURE SENSING

Temperature sensing is accomplished by a thermal sensing integrated circuit. This integrated circuit outputs an analog voltage between 0 and 5 volts that corresponds to the relative air temperature.

This analog signal is applied to the analog to digital converter built into the embedded controller. The controller processes this value and compares it against pre-determined values to control the sequence of events needed when an over temperature condition arises

[1] Replace only with the same type and rating.

All information contained in this document is confidential and proprietary to THOMCAST and shall not be disclosed without the prior written permission of THOMCAST.

MAINTENANCE

COMWAVE products have been carefully designed to be maintenance free. Only periodic inspection and cleaning is necessary.

INSPECTIONS

1. Periodically inspect cooling fans on the rear door of the rack and the heatsinks of the power amplifier segments for heavy accumulations of dirt and/or insects. Heavy accumulation of foreign debris impedes cooling effectiveness and could lead to premature failure. Should any debris be detected, shut down the transmitter and follow the cleaning instructions to remove debris from transmitter.

   - The agile transmitter will automatically recover the channel of the transmitter that is being cleaned.

2. After performing routine maintenance, be sure to check the tightness of all cable connections and especially the integrity of crimp type connectors.

CLEANING

POWER SUPPLY PLUG-IN MODULE:

1. Pull the plug-in out of the sub-chassis and vacuum the heatsink.

2. Remove the side "snap-on" cover and clean the front panel fan.

3. Replace the cover.

4. Plug the segment back in.

   - Be sure not to bend or damage the fins of the heatsink during cleaning.
   - Keep in mind that when the plug-in module is removed there will be an interruption in service, which will be restored immediately upon its return to the sub-chassis.

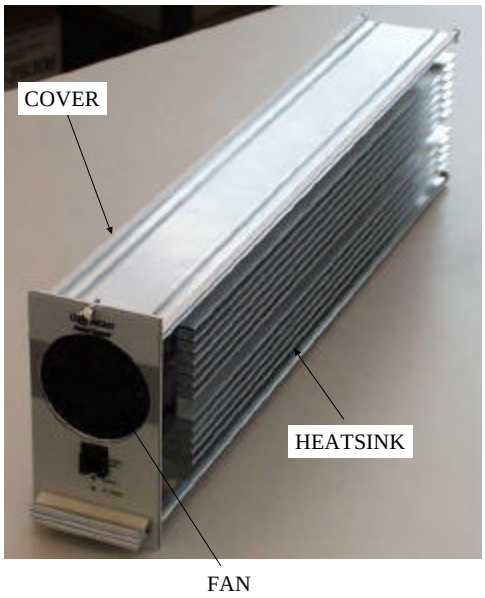

Figure 1: Power supply plug-in module.

All information contained in this document is confidential and proprietary to THOMCAST and shall not be disclosed without the prior written permission of THOMCAST.

Figure 2: Power amplifier segment heatsink.

POWER AMPLIFIER SEGMENTS:

Pull each power amplifier segment one at a time from the front of the rack and vacuum the heatsinks. Due to the hot replacement feature, if one segment is removed at a time, the transmitter does not need to be turned off. Plug the segment back in after cleaning.

Be sure not to bend or damage the fins of the heatsinks during cleaning.

FAN:

Clean the fan on the rear of the sub-chassis, removing the fan guard if necessary.

1. Power connection; remove the power prior to cleaning.

2. To remove the fan guard remove these screws.

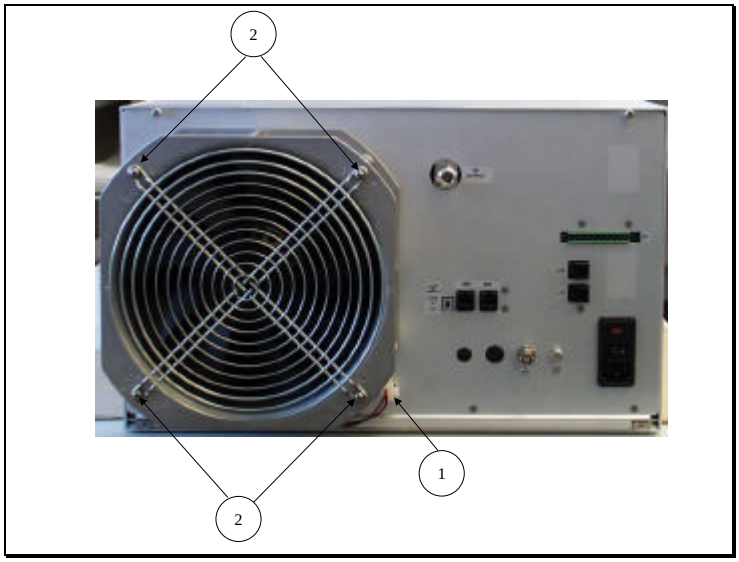

Figure 3: Rear panel fan.

All information contained in this document is confidential and proprietary to THOMCAST and shall not be disclosed without the prior written permission of THOMCAST.

CALIBRATIONS FOR THE SDxxxxC TRANSMITTER SERIES

This series of transmitters is designed to perform auto-calibration upon turn-on. Once this is complete if the output power is incorrect or missing proceed as follows.

FORWARD POWER – UPCONVERTER / AMPLIFIER PLUG-IN MODULE:

1) Make connections as depicted in Figure 1 note 1.
2) Connect a PC with the application file DRIVER_PLUG_IN_CAL_&_ADJUS to the RS-232 port on the front panel.
3) Initialize DRIVER_PLUG_IN_CAL_&_ADJUS application.
4) Through the program application, specifically in the POWER CONTROL BOX, set the POWER MODE to MANUAL.
5) With the MANUAL POWER CONTROL sliding button, set power in order to have a reading of 20 dBm (100mW) at the external power meter. Account for the directional coupler factor.
6) Enter the number 20 in the DRIVER FORWARD POWER SET VALUE field.
7) Press the DRIVER FORWARD POWER CALIBRATE button.
8) On the upconverter plug-in, display the Forward Power measurement by:
   a) (Considering the LCD display is in its default state): SELECT (to make the STATUS option of the STATUS / CALIBRATE screen to flash)
   b) ENTER (to display PS / LO / DRIVER status screen)
   c) SELECT, SELECT (to highlight the DRIVER STATUS option)
   d) ENTER (to display options INSIGNAL / SYSTEM FORWARD POWER / SYSTEM REFLECTED POWER / DRIVER FORWARD POWER under the DRIVER STATUS menu)
   e) SELECT, SELECT and SELECT (to highlight the DRIVER FORWARD POWER)
   f) Enter to display the measurement
9) Verify that the reading on the LCD display is consistent with the reading on the external power meter. Output power of the upconverter plug-in is now calibrated.
10) Close DRIVER_PLUG_IN_CAL_&_ADJUS application and disconnect PC.
11) Return the system to its original interconnections.

All information contained in this document is confidential and proprietary to THOMCAST and shall not be disclosed without the prior written permission of THOMCAST.

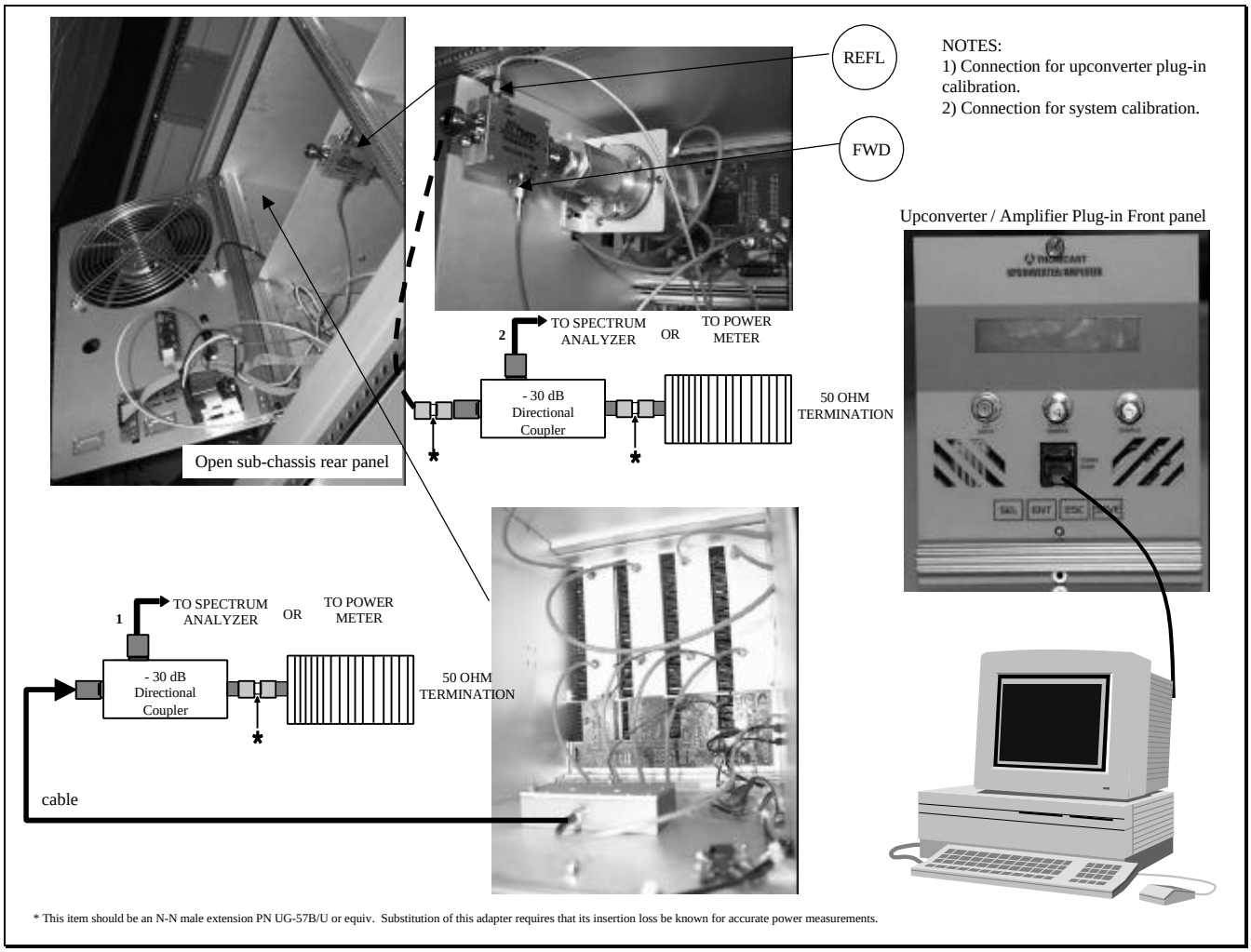

Figure 1: Calibration interconnections.

FORWARD POWER – SYSTEM:

1) Make connections as depicted in Figure 1 note 2.
2) Connect a PC with the application file DRIVER_PLUG_IN_CAL_&_ADJUS to the RS-232 port on the front panel.
3) Initialize DRIVER_PLUG_IN_CAL_&_ADJUS application.
4) Through the program application, specifically in the POWER CONTROL BOX, set the POWER MODE to MANUAL.
5) With the MANUAL POWER CONTROL sliding button set power in order to have a reading of 44 dBm (25W) for the SD2500C and 47 dBm (50W) for the SD5000C at the external power meter. Account for the directional coupler factor.
6) Enter the same number as above in the SYSTEM FORWARD POWER SET VALUE field.
7) Press the SYSTEM FORWARD POWER CALIBRATE button.
8) On the upconverter plug-in, display the Forward Power measurement by:
   a) (Considering the LCD display is in its default state): SELECT (to make the STATUS option of the STATUS / CALIBRATE screen to flash)
   b) ENTER (to display PS / LO / DRIVER status screen)
   c) SELECT, SELECT (to highlight the DRIVER STATUS option)

All information contained in this document is confidential and proprietary to THOMCAST and shall not be disclosed without the prior written permission of THOMCAST.

   d) ENTER (to display options INSIGNAL / SYSTEM FORWARD POWER / SYSTEM REFLECTED POWER / DRIVER FORWARD POWER under the DRIVER STATUS menu)
   e) SELECT, SELECT and SELECT (to highlight the DRIVER FORWARD POWER)
   f) Enter to display the measurement
9) Verify that the reading on the LCD display is consistent with the reading on the external power meter. Output power of the System is now calibrated.
10) Set POWER MODE to AUTO
11) Slide AUTO POWER CONTROL to recover power to the value previously read at the external power meter (if necessary).
12) Re-check the upconverter plug-in LCD reading.
13) Close DRIVER_PLUG_IN_CAL_&_ADJUS application and disconnect PC.
14) Return the system to its original interconnections.

SYSTEM REFLECTED POWER CALIBRATION:

1) If you haven't already performed the system forward power calibrations do so now, as described above, omitting steps 13 and 14.
2) Put the system in stand-by with the program application.
3) On the upconverter plug-in, display the Forward Power measurement by:
   a) (Considering the LCD display is in its default state): SELECT (to make the STATUS option of the STATUS / CALIBRATE screen to flash)
   b) ENTER (to display PS / LO / DRIVER status screen)
   c) SELECT, SELECT (to highlight the DRIVER STATUS option)
   d) ENTER (to display options INSIGNAL / SYSTEM FORWARD POWER / SYSTEM REFLECTED POWER / DRIVER FORWARD POWER under the DRIVER STATUS menu)
   e) SELECT, SELECT and SELECT (to highlight the DRIVER FORWARD POWER)
   f) Enter to display the measurement
4) Swap FORWARD and REFLECTED POWER cables coming out of the output coupler.
5) Enter the number 44 for an SD2500C system and 47 for an SD5000C system in the SYSTEM REFLECTED POWER SET VALUE field.
6) Put the system in TRANSMIT MODE.
   a) While performing steps 7 and 8 the system will shut down due to the high-reflected power simulated measurement, this is necessary; if these steps are completed within 5 seconds this will not occur.
7) Press the SYSTEM REFLECTED POWER CALIBRATE button.
8) Verify that the reading on the LCD display is consistent with the reading on the external power meter. Reflected power of the System is now calibrated.
9) Once the system shuts down because of the high reflected power simulated measurement. Put it in STAND-BY mode.
10) Put the FORWARD and REFLECTED POWER cables back to their original positions.
11) Set the system mode to TRANSMIT
12) Close DRIVER_PLUG_IN_CAL_&_ADJUS application and disconnect PC.
13) Return the system to its original interconnections.

All information contained in this document is confidential and proprietary to THOMCAST and shall not be disclosed without the prior written permission of THOMCAST.

SECTION 4

PREVIOUS
Print

SUB-CHASSIS THEORY OF OPERATION

The sub-chassis contains guide rails and houses the following components. Refer to Figure 1 for numerical references.

1) One driver assembly, which is made up of three plug-in modules
   a) LO plug-in
   b) Power supply plug-in
   c) Upconverter plug-in

   The plug-in modules slide into the chassis on nylon card guides and connect to the driver back plane board using a guide pin and a 48-position DIN connector.

   The power supply plug-in module connects using a guide pin, 48-position DIN connector, and a 6-position header. The header uses a DPDT push button switch to turn on the feed power only after the plug-in module is fully inserted; this is to ensure that there is no arcing between connections before the plug-in module is fully engaged. It also certifies that the module is properly grounded before any voltage is applied.

2) A front-end DC power supply

   This power supply is an OEM product and is hot swappable.

3) Up to four power amplifier segments

   Each amplifier segment slides into the chassis on nylon slides and connects to the amplifier motherboard via floating connectors[10]. The key-lock switch, located on the segments front panel, must be in the OFF position in order to plug it in. This assures that all connections, mechanical and electrical, are made before the amplifier is turned on.

Once the plug-in modules are in place, thumbscrews on the front panels are fastened to the sub-chassis to secure them and provide a reliable ground connection. The key-lock switch on the amplifier segment is turned to the ON position to apply power to the segment.

Floating OSP connectors[9,10] mounted on the back plane board, the back panel of the chassis, the back of the plug-in modules, and the back of the power amplifier segments, provide the interface for RF input and output. See respective plug-in module theory of operation documentation for the location of the connectors.

4) Three communications boards
   a) 47266064 - driver back plane board
      See DOC13-0176 for more information about this board
   b) 47266145 - amplifier motherboard and back plane
      See DOC13-0183 for more information about this board
   c) 47266165 - power supply back plane
      See DOC13-0186 for more information about this board

All information contained in this document is confidential and proprietary to THOMCAST and shall not be disclosed without the prior written permission of THOMCAST.

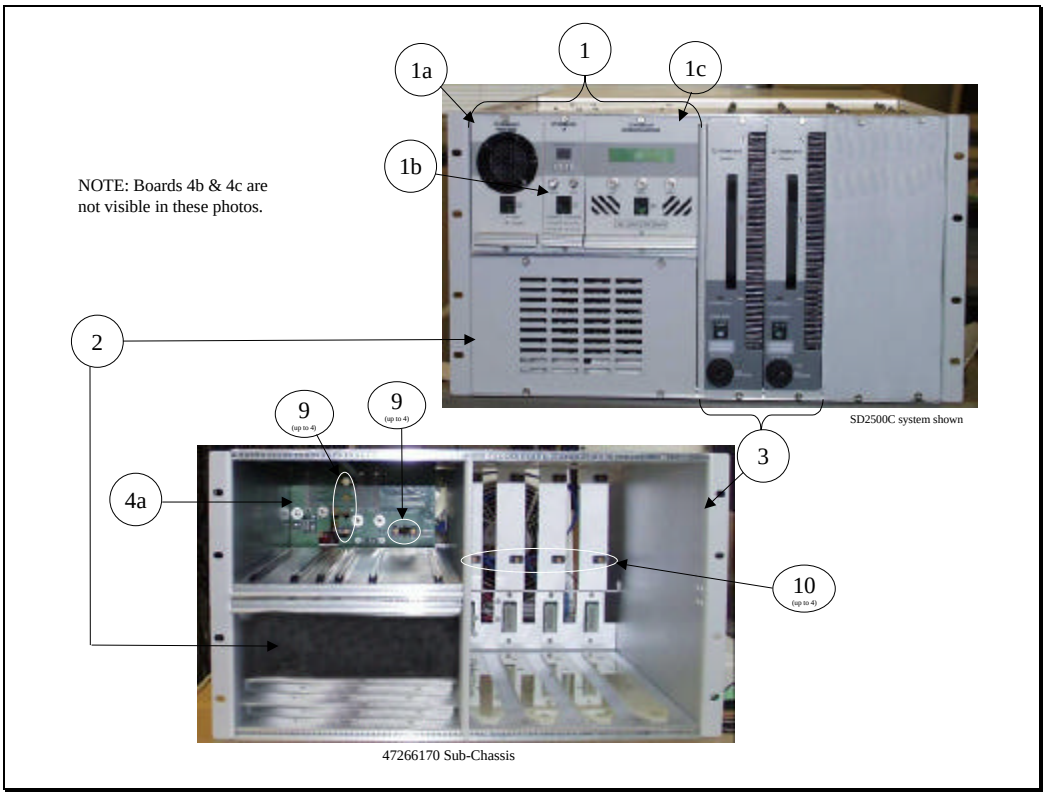

Figure 1: 47266170 sub-chassis.

Refer to Figure 2 for numerical references.

5) RF Splitter

This component divides the microwave signal of the driver in, up to 4, outputs to the power amplifier segments. It can be used as a divider by 2, 3, or 4, depending on the total output power of the equipment.

6) Power Combiner

The power combiner merges the output signal from the power amplifier segments into one microwave output.

7) Directional Coupler

This piece of the equipment is used to measure forward and reflected power.

8) Power Detector

The power detector transforms the forward and reflected power signals from the directional coupler into DC voltage to be processed in the upconverter / amplifier module.

All information contained in this document is confidential and proprietary to THOMCAST and shall not be disclosed without the prior written permission of THOMCAST.

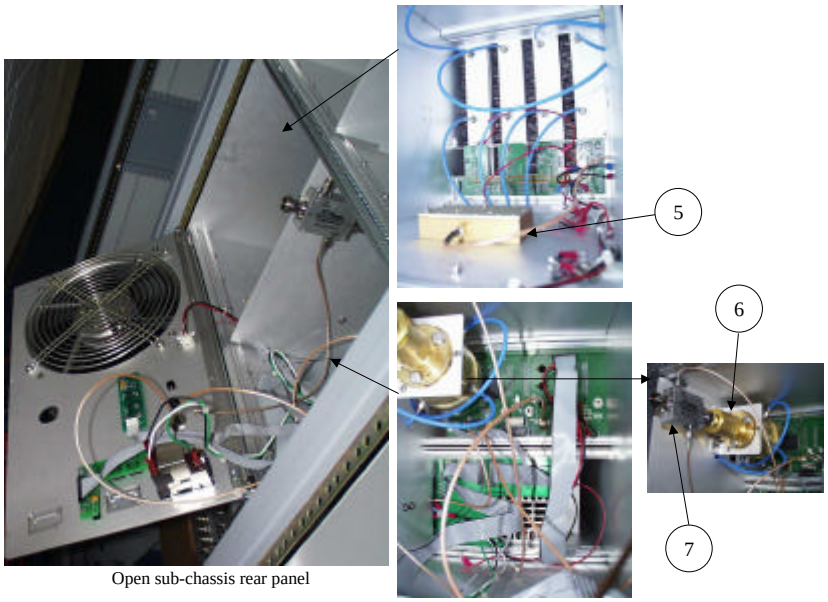

Open sub-chassis rear panel

Figure 2: Sub-chassis, inside rear.

FRONT AND REAR PANEL DESCRIPTION

Front panel
The sub-chassis has no front panel; see respective plug-in module theory of operation documentation for a discussion of front panel features.

Rear panel
Refer to Figure 3 for numerical references.

1) FAN: A rear mounted $48V_{DC}$ fan provides system cooling. AC fan is optional.
2) RF OUT: RF output connector (Female N type).
3) COMMUNICATION PORTS: RJ11 phone jack connectors and a termination switch from the RS-485 board used for communication to ComView.
4) J1: Female 14 pin header for diagnostics monitoring.
5) J2: RJ11 phone jack connector for OPTIONAL Agile controller.
6) J3: RJ11 phone jack connector for Local RS-485 communication.
7) FUSE: Main line fuse - 8amperes (used for 220V system only).
8) POWER SWITCH: Turn system on and off.
9) AC INPUT: AC Line input power cord connector.
10) FREQ REF IN: 75ohm Female F connector, external 10 MHz reference signal input.
11) FCC ID LABEL: Federal Communications Commission identification label.
12) IF INPUT: 75ohm Female BNC connector, input signal from an external source.
13) Not applicable in this model.

All information contained in this document is confidential and proprietary to THOMCAST and shall not be disclosed without the prior written permission of THOMCAST.

14) Not applicable in this model.

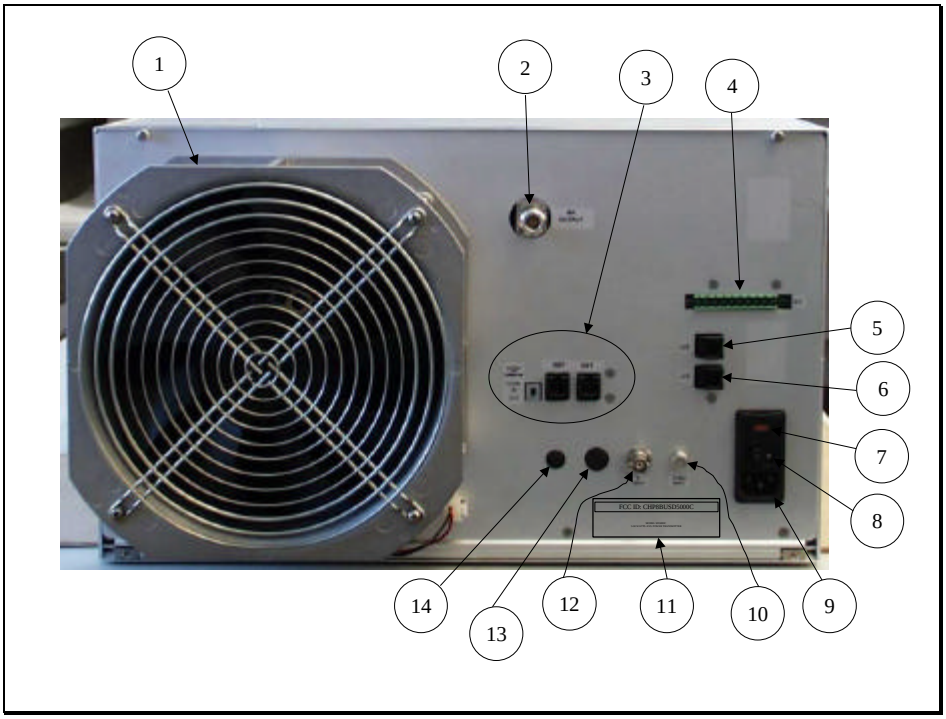

Figure 3: Sub-chassis rear panel.

All information contained in this document is confidential and proprietary to THOMCAST and shall not be disclosed without the prior written permission of THOMCAST.

MICROCONTROLLER BOARD (MCU) DESCRIPTION

An MCU (microcontroller unit) circuit board assembly is contained within each plug-in module. The MCU assembly hardware consists of a microcontroller IC and associated memory, a CPLD IC, and various analog and logic support circuitry; the MCU operates under the control of a firmware program executed by the microcontroller. Each plug-in module has it's own firmware which is discussed in separate documents that can be found in the respective modules section of the manual.

A variety of on-chip utilities and interfaces are integrated in the MCU, easing the support circuitry requirements and simplifying the interfacing of the MCU to other circuit board resources. See Figure 1 for a block diagram of the board.

The MCU is operated in an expanded mode, with program and data memory external to the MCU IC. The MCU uses a 16 bit external data bus for interfacing to the memories. The firmware operating program is stored in IC U3, a FLASH ROM memory. The storage is arranged and accessed in word (2 byte) mode. An address bus is provided by the MCU to access the FLASH memory. The MCU and CPLD ICs provide additional control signals.

Two RAM ICs provide run-time data storage. U6 and U8 are 512 Kbyte static RAMs. The RAMs are served by the MCU address bus and various support signals provided by the MCU and CPLD. Each RAM provides an 8 bit data bus for reads and writes. By joining the two RAM data busses as low and high bytes on the 16 bit data bus, full 16 bit accesses are achieved.

Various glue logic, I/O, and register support functions are provided by IC U4, an in-circuit programmable CPLD. The CPLD contains I/O registers that allow writes to and reads from MCU board signals such as AUX_OUT_A through AUX_OUT_F, and ANALOG_ALARM_1 through ANALOG_ALARM_3. The CPLD registers are within the MCU memory map and are accessed by the MCU through interfaces to the MCU address and data busses.

The CPLD register signals are used for accessing various on and off-board devices see Table 1.

Table 1: CPLD register signals.

Signal name	***Type (I/O)***	***Application***		
		Upconverter	Local Oscillator	System Controller
CS_A through CS_F	O	DAC address, AGC & ALC module control	SPI user enable	N/A
AUX_OUT_A through AUX_OUT_F	O	PS and ALC module control; user interface	User Interface; fault alarm	N/A
Logic_in_6, 9, 10, 11	I/O	IF detect, fault alarm, remote and reflected shutdown	Phase Lock	Agile Controller interface; back plane interface
MUX_0, 1, 2	O	Analog mux address	Analog mux address	Analog mux address
Analog_alarm_0, 1, 2	I	Vgs testing	N/A	N/A

CPLD input signals Analog_alarm 0, 1, and 2 are sourced from the outputs of analog comparators IC U11A, B, and C. The comparators test three analog signals from board connector J103 against reference voltages provided by IC U1, a bank of multiple digital potentiometers. This system provides for the monitoring of negative voltages.

All information contained in this document is confidential and proprietary to THOMCAST and shall not be disclosed without the prior written permission of THOMCAST.

Positive analog voltages applied to connector J103 are conditioned and fed to the MCU A/D converter. Single ended voltages from J103 are amplified and band-limited by op amps contained in U9 and supporting circuitry. The outputs of these single-ended circuits are fed to A/D inputs. Differential analog voltages are amplified with fixed gain and band-limited with op amp ICs U10, U14, U17, and supporting circuitry. These op amp circuits convert the differential input signals to single ended signals. The single ended signals are selected for monitoring through analog multiplexers. As each signal is selected for monitoring, it is passed to a buffer and finally to an A/D input. All A/D inputs are protected through voltage and current limiting circuits.

The MCU assembly provides two serial communication ports. Depending on application, either two RS-232 ports or one RS-232 and one RS-485 port may be required. Jumper JK101 is used to select the function of Port 2. When JK101 is placed in the 1-2 position, Port 2 is an RS-232 port; in the 2-3 position, it is an RS-485 port.

Table 2: Communication Ports.

Application		
Upconverter	Local Oscillator	System Controller
Port 1- RS-485 Port 2- RS-232	Port 1- RS-485 Port 2- RS-232	Port 1- RS-485 Port 2- RS-485

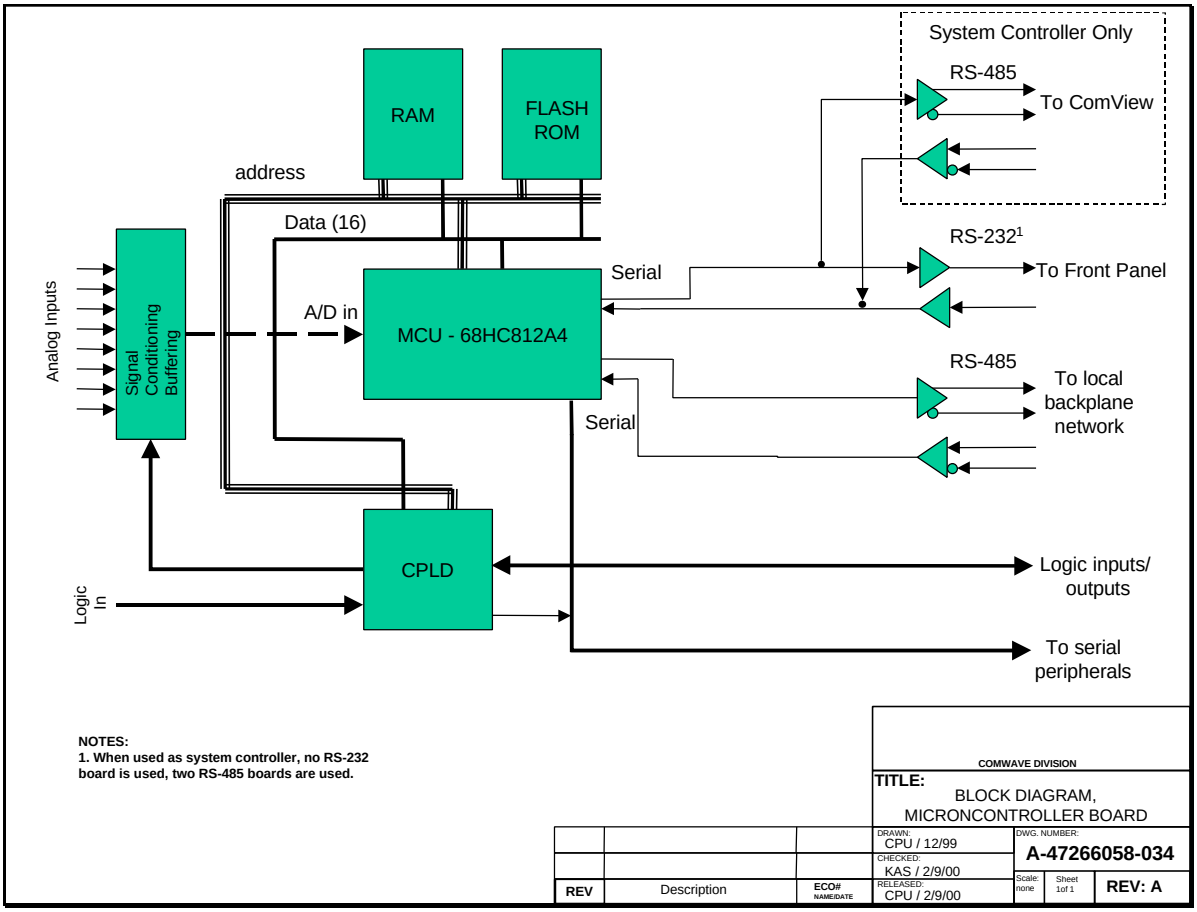

Figure 1: MCU block diagram.

All information contained in this document is confidential and proprietary to THOMCAST and shall not be disclosed without the prior written permission of THOMCAST.

UPCONVERTER PLUG-IN MODULE THEORY OF OPERATION

This plug in module is joined to the main chassis via three slide rails and two thumbscrews. Several modules make up this plug-in and are accessible through its two detachable covers. The covers, together with the rear panel fan, are part of the forced-convection cooling system.

The basic function of this plug-in is to convert an IF input signal to the microwave frequency range, containing the proper spectrum content and proper power level to excite subsequent stages of amplification. To accomplish this, the appropriate level IF signal, local oscillator signal and power supply voltages must be delivered to this plug-in. For detailed descriptions on each of the plug-in modules, see respective module documentation.

Refer to the block diagram, 47266116-034, for a functional layout of the modules contained within the plug-in; refer to Figure 2 and/or Figure 3 for the actual location of referenced connectors and user accessible interfaces.

IF and RF signals to and from the plug-in module are sent through coaxial connectors and cables on the front and back panels, while signals in a lower frequency range go through a 48-pin connector located on the back-panel. IF and RF signals are sent between modules within the plug-in similarly, via coaxial cables. Signal traffic other than IF/RF, such as, power supply voltages, detected power voltages, and serial data from the MCU board, are distributed between the modules using the distribution board.

Figure 1: Upconverter plug-in module.

The IF signal enters the plug in and is routed to the IF linear processor where delay and frequency response are adjusted, as needed. The processed IF signal is then delivered to the microwave converter module, where frequency conversion takes place; filtering and power amplification follow the conversion inside this module. Embedded between amplifier stages of the microwave converter module, the microwave pre-corrector generates intermodulation products with opposite characteristics of those generated in the last amplifiers of the system, minimizing the overall third and fifth order products of the system RF output. The IPA module provides a final amplifier stage that boosts the signal before it leaves the plug-in.

Two major level closed loop controls are present in this plug-in module; one is to keep the constant 0dBm total power at the microwave precorrector module. In this case, a power-sensing device is installed inside the module, right before the J5 connector, the resultant proportional voltage is then fed to the distribution module where an integrated circuit (U18) compares with a reference and driver PIN attenuators inside the IF linear processors accordingly.

The second closed loop control is to compensate the gain variation of the amplifier chain up to the transmitter output. Both integrators and PIN attenuators are found inside the µW precorrector module and the voltage proportional to the power level is fed from an external detector module.

All information contained in this document is confidential and proprietary to THOMCAST and shall not be disclosed without the prior written permission of THOMCAST.

The distribution board also receives the voltage proportional to the temperature that is generated by a temperature sensor module; this module is usually placed on the last power amplification stage.

The interface board is responsible for providing +24, +12, -12, and +8V to the plug-in, as well as voltages of forward and reflected detected power for further processing. This board is also the channel through which serial data is exchanged between this, other plug-ins, and the rest of the system.

The front panel PCB has a serial port, which can be used for testing, adjusting or controlling most of the plug-in functions with the help of a personal computer. Together the front panel overlay keyboard and the display board provide a user interface capable of controlling a limited number of functions inside the upconverter plug-in module; they also allow for the presentation of a series of measurements in the LCD display.

FRONT AND REAR PANEL DESCRIPTIONS

Front Panel

Refer to Figure 2 for numerical references.

1) THUMB SCREWS: Secure module to the sub-chassis and provide a reliable ground connection; loosen to remove module for replacement or repair.

2) LCD DISPLAY: Displays a series of measurements, user adjustments, and general status information.

3) LO INPUT: Female SMA 50O connector used to input the LO signal from the LO plug-in module. LO level must be 13 dBm ±1 dB.

4) UHF/IF SAMPLE: Female SMA 50O connector used to test the signal level after exiting the IF linear processor module.

5) RF SAMPLE: Female SMA 50O connector used to test the output level.

6) COMM PORT: RS-232 Communications port for communication to a PC.

7) KEYPAD: User's selection keys:

   a) SEL – select, provides user with scrolling capabilities.

   b) ENT – enter, allows user to choose an option.

   c) ESC – escape, allows user to go back to previous screen.

   d) SAVE – allows user to store new

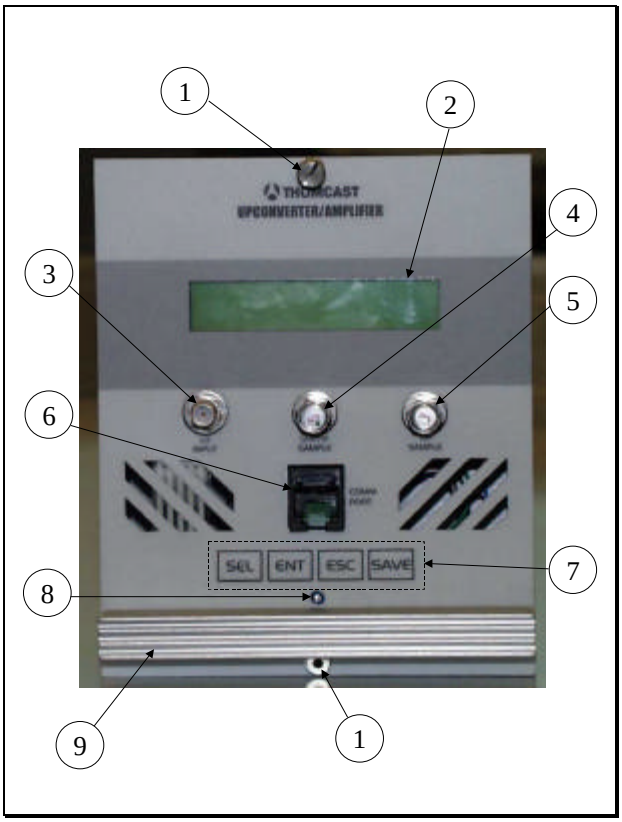

Figure 2: Upconverter plug-in front panel.

All information contained in this document is confidential and proprietary to THOMCAST and shall not be disclosed without the prior written permission of THOMCAST.

settings or adjustments.

8) POTENTIOMETER: Used in conjunction with the LCD display and keypad this allows the following user adjustments:

   a) Power Level
   b) Output Power
   c) Frequency Response 1
   d) Frequency Response 2
   e) Precorrection
      i) Distribution Generation
      ii) Cancellation 1
      iii) Cancellation 2
      iv) Phase

9) HANDLE: Assists in removing module from sub chassis.

Rear Panel

Refer to Figure 3 for numerical references.

1) FAN: 18 CFM DC for plug-in module cooling only.

2) 48 PIN DIN: Interface to the back plane, (all power, control and diagnostics)

3) GROUND / ALIGNMENT STUD: Ensures that proper ground is made prior to engaging the 48 pin DIN; also aids in the alignment of the module within the sub-chassis.

4) IF INPUT: Male 50O blind mate provides interface to the back plane and allows passage for the IF input signal.

5) Not applicable in this model.

6) Not applicable in this model.

7) RF OUTPUT: Male 50O blind mate supplies the RF output signal to the transmitting system of amplifier cage, depending on model type.

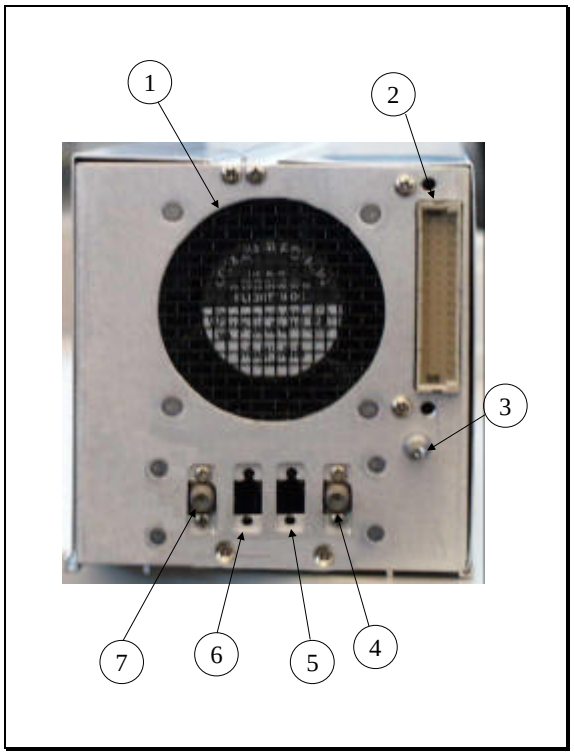

Figure 3: Upconverter plug-in rear panel.

All information contained in this document is confidential and proprietary to THOMCAST and shall not be disclosed without the prior written permission of THOMCAST.

UPCONVERTER PLUG-IN MODULE SPECIFICATIONS

Parameter	*Specification*	*Notes/Test Conditions*
IF INPUT		
Digital		
Average Input Power	-15 dBm ± 2 dB	2^{23}-1 PN data sequence (at transmitter output)
IF Input Frequency	44 MHz (center)	Other frequency options available
Connector / Impedance	Blind Mate / 75 O	Mates with floating back-plane connector
Analog (Combined visual and aural)		
IF Input Level	-8 dBm peak ± 2 dB (Visual Carrier) -23 dBm peak ± 2 dB (Aural Carrier)	Combined visual and aural
IF Input Frequency Aural Carrier Visual Carrier	 41.25MHz 45.75MHz	Other frequency options available
Connector / Impedance	Blind Mate / 75 O	Mates with floating back-plane connector
RF OUTPUT		
Digital		
Average Output Power	20mW to 200mW	Function of A.L.C. settings - 2^{23}-1 PN data sequence (at driver output)
Output Frequency	1850 - 3600 MHz	In select bands
Frequency Response	≤ ±0.25 dB	F_C ±2.6 MHz Measured at Sub-rack output
IM_3 (dBc)	< 50	16dBm RF Output Power (64QAM) Relative to in-band average PSD measured @ 100 KHz RBW
Carrier to Noise (C/N)	≥ 55 dB	
Hum and Noise	≤ -60 dBc	
Group Delay	≤ ±15 ns	F_C ±2.6 MHz RF Output Connector
Digital Modulation Error Vector Magnitude (EVM)	≤ 2.0%	64-QAM/8-VSB @ 5.06 Msps RMS average over 12,500 symbols Measured at Sub-rack output
Digital Modulation Signal to Noise Ratio (SNR)	≥ 30 dB	64-QAM/8-VSB @ 5.06 Msps RMS average over 12,500 symbols Measured at Sub-rack output
Magnitude Linearity (AM-AM conversion)	≤ ±0.125 dB	Measured at Sub-rack output
Phase Linearity (AM-PM conversion)	≤ ±0.75°	Measured at Sub-rack output
RF Output Regulation	≤ ± .2 dB	Measured at Sub-rack output
Connector / Impedance	Blind Mate / 50 O	Mates with floating back-plane connector
Analog Performance		
Output Power	100mW - 1 Watt Peak Sync	Adjustable from 10 to 100% of peak sync power
Output Frequency	Any 6, 7, or 8 MHz Channel 1850 - 3600 MHz	In select bands
Emission	5M75C3F or per CCIR	

All information contained in this document is confidential and proprietary to THOMCAST and shall not be disclosed without the prior written permission of THOMCAST.

CREATED: AAC.....3/19/99 *CHECKED: KAS.....2/7/00* *RELEASED: AAC.....2/8/00*

SPECIFICATIONS SUBJECT TO CHANGE WITHOUT NOTICE

Document #: 47266117.00-306 ***REV: P1***

Parameter	***Specification***	***Notes/Test Conditions***
IM_3 (dBc)	< 50	Two Tones @ 13dBm/c (Δf = 6MHz) – RF Output Connector
RF Output Regulation	= ± 0.2 dB	
DC POWER REQUIREMENTS		
Voltages / Currents	+12 V_{DC} ±.5 @ 2.5A max +8 V_{DC} ±.5 @ 1.2A max -12 V_{DC} ±.5 @ 150ma max	
Connector	48 conductor, 3amps / circuit minimum	Interfaces to back-plane
ENVIRONMENTAL		
Cooling	Forced air-cooled, minimum of 18 CFM required	Forced air-cooled drawing ambient air through the intake on the front of the Up-Converter Plug-In. and exhausting out the rear.
Operating Temperature	0°C to 50°C	
Relative Humidity	0 to 95% non-condensing	
ALARMS / INDICATORS / AJUSTMENTS / CONTROLS		
RF Output Failure Alarm	DRIVER FAILURE Low (TTL Low) = RF Output Failure	Signal available at back-plane
Over- Temperature Alarm	DRIVER FAILURE Low (TTL Low) = Over Temperature	Signal available at back-plane and Visible via LCD Display (Software/pending)
In-Signal Indicator	PRESENT or NOT PRESENT	Visible via LCD Display (Software/pending)
Transmit Indicator	ON AIR or OUT OF AIR	Visible via LCD Display (Software/pending)
Power Supply Status / Measurements	PASS or FAIL / V scale	Visible via LCD Display (Software/pending)
RF Power Measurements	% Scale (dBm scale option)	Visible via LCD Display (option is Software/pending)
Temperature Indicator	°C scale	Visible via LCD Display (Software/pending)
Frequency Response (low side) Adjustment	Potentiometer allows adjustment of low side IF frequency response	Access via front panel
Frequency Response (high side) Adjustment	Potentiometer allows adjustment of high side IF frequency response	Access via front panel
Distortion Level Adjustment	Potentiometer allows adjustment of pre-distortion level	Access via front panel
ALC Level Adjustment	Potentiometer allows adjustment of ALC.	Access via front panel
Detector Threshold Control	RS-232 interface	Set via laptop computer with VB application, Access via front panel
Input Level Control	RS-232 interface	Set via laptop computer with VB application, Access via front panel
Frequency Response (low side) Control	RS-232 interface	Set via laptop computer with VB application, Access via front panel
Frequency Response (high side) Control	RS-232 interface	Set via laptop computer with VB application, Access via front panel
Distortion Level Control	RS-232 interface	Set via laptop computer with VB application, Access via front panel
Linearity Cancellation 1 Control	Potentiometer allows adjustment of linearity cancellation	Access via front panel
Linearity Cancellation 2 Control	RS-232 interface	Set via laptop computer with VB application, Access via front panel

All information contained in this document is confidential and proprietary to THOMCAST and shall not be disclosed without the prior written permission of THOMCAST.

Parameter	*Specification*	*Notes/Test Conditions*
Distortion Phase Control	RS-232 interface	Set via laptop computer with VB application, Access via front panel
ALC Level Control	RS-232 interface	Set via laptop computer with VB application, Access via front panel
Stand-by Control	RS-232 interface	Set via laptop computer with VB application, Access via front panel
Reset Control	Momentary switch to reset on-board Microprocessor	Access via front panel
Function Switch Stand-by Meter Off +11V P.S. FWD PWR REFL PWR.	 Places system in stand-by mode No indication on analog meter Displays proper DC voltage of the main switching power supply Displays forward power on analog meter Displays reflected power on analog meter	Access via front panel
Analog Meter +11V P.S. FWD PWR REFL PWR	 Indicates proper DC voltage of the main switching power supply Indicates forward power transmitted Indicates reflected power transmitted	Visible via front panel
PHYSICAL		
Mechanical Dimensions	4.75”H x 4.2”W x 17.5”D[1] 12.07 cm H x 10.67 cm W x 44.45 cm D	
Weight	6 lbs. (3Kg)	
Front Panel Color	Matches Sherwin William’s Paint No. Light Gray ……..F63TXA2555 Medium Gray ….F63TXA4841	Paint mix number 4303 identifies store location when added to Paint No. Lexan overlay color matched as indicated

[1] Measured without ground pin on rear panel and front panel handle; add approximately 2” for these.

All information contained in this document is confidential and proprietary to THOMCAST and shall not be disclosed without the prior written permission of THOMCAST.

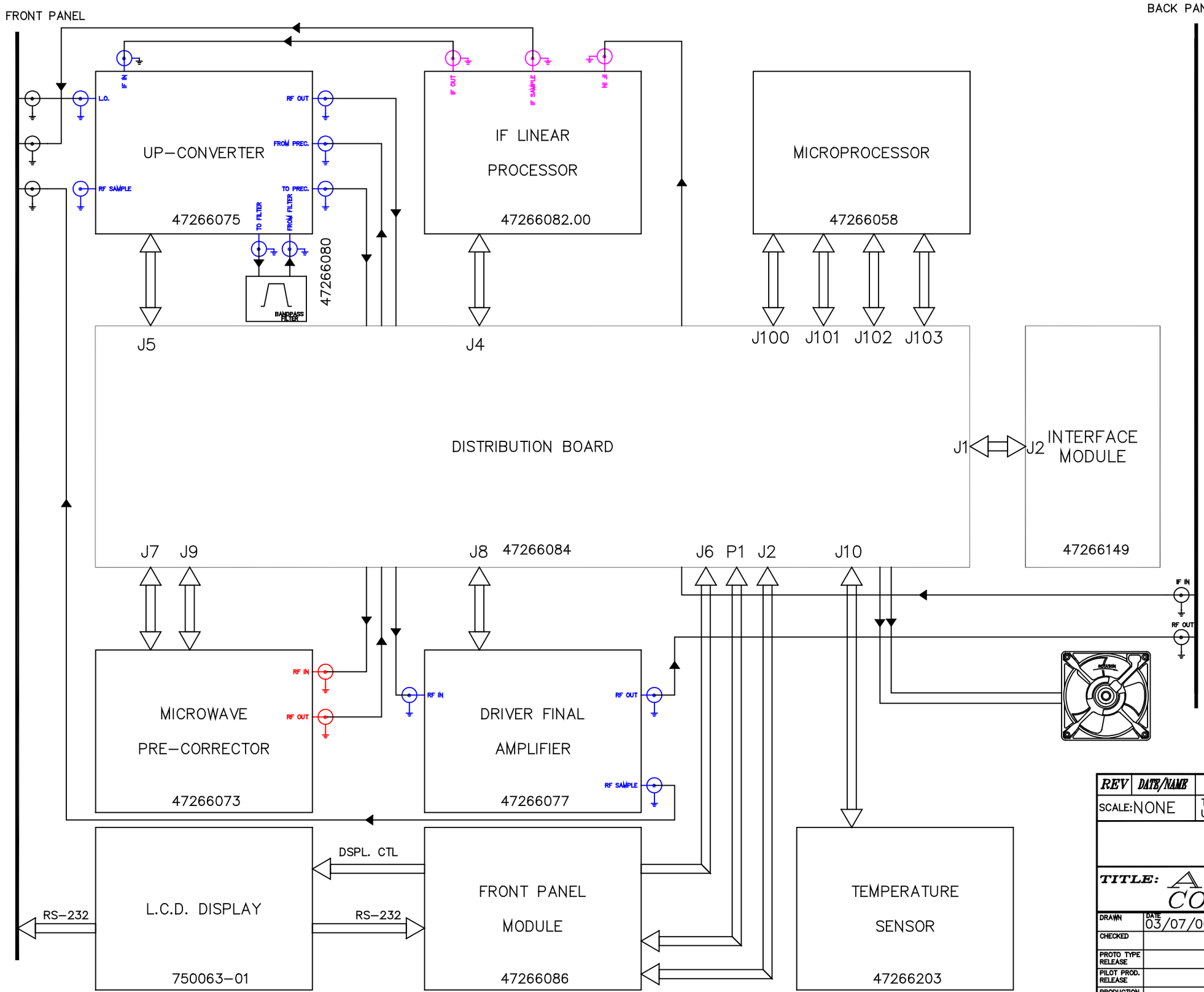

REV	DATE/NAME	DESCRIPTION	ECO No.

SCALE: NONE — TOLERANCE UNLESS NOTED FRAC.± 1/8 DEC.± .005 ANG.± .5°

THOMCAST COMMUNICATIONS Inc.
COMWAVE Division

TITLE: AGILE UP-CONVERTER PLUG-IN

	DATE	NAME
DRAWN	03/07/00	ANDRE CASTRO
CHECKED		
PROTO TYPE RELEASE		
PILOT PROD. RELEASE		
PRODUCTION RELEASE		

DWG. NO. B-47266117-034

SHEET: 1 OF 1

Pilot Qty:

PROTO TYPE REVISION P1

REV. P1

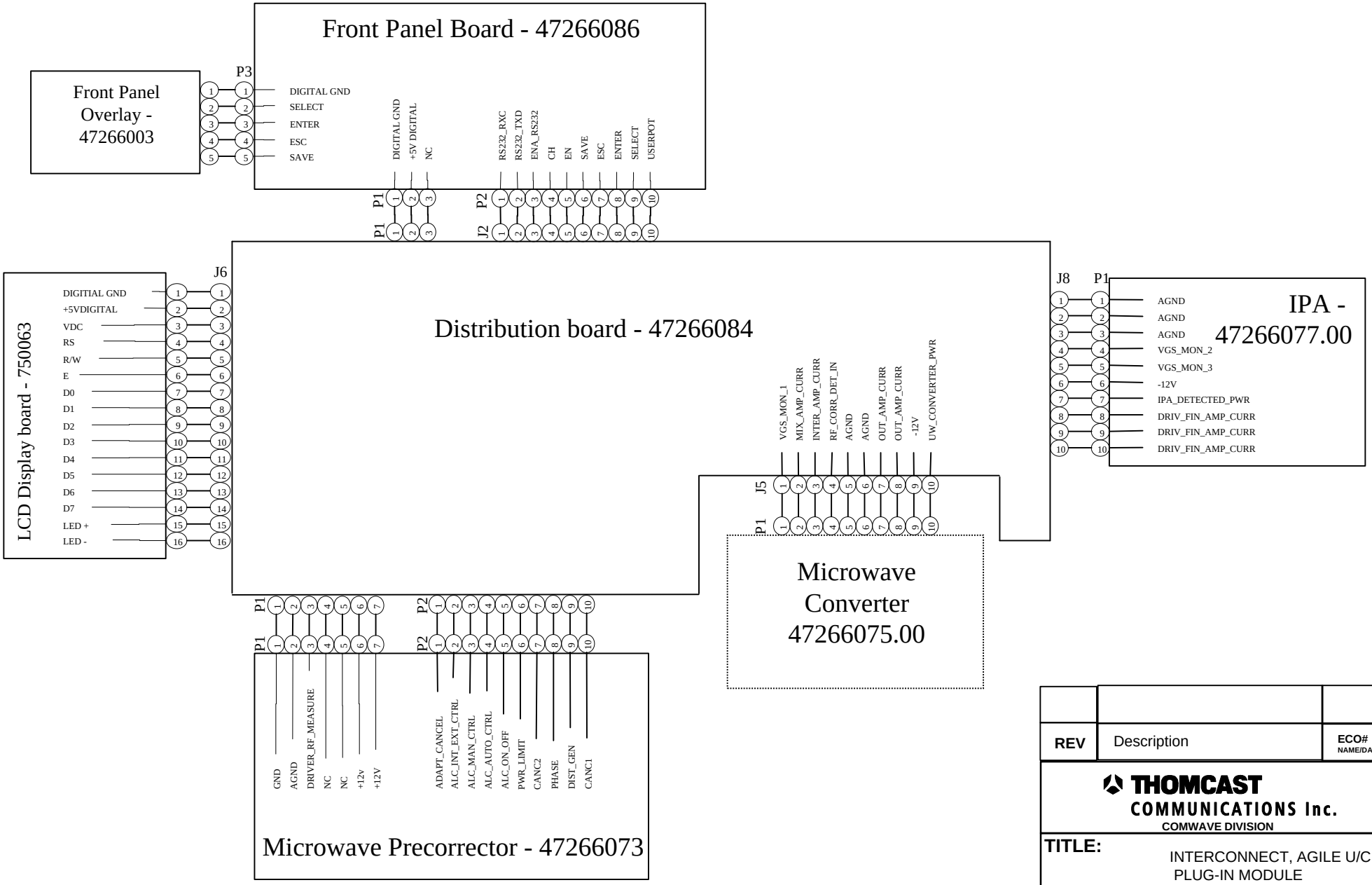

REV	Description	ECO# NAME/DATE

THOMCAST COMMUNICATIONS Inc.
COMWAVE DIVISION

TITLE: INTERCONNECT, AGILE U/C PLUG-IN MODULE

DRAWN: AAC 02/14/00
CHECKED: ????????
RELEASED: Name / date

DWG. NUMBER: **A-47266117-050**

Scale: none | Sheet 1 of 2 | **REV: P1**

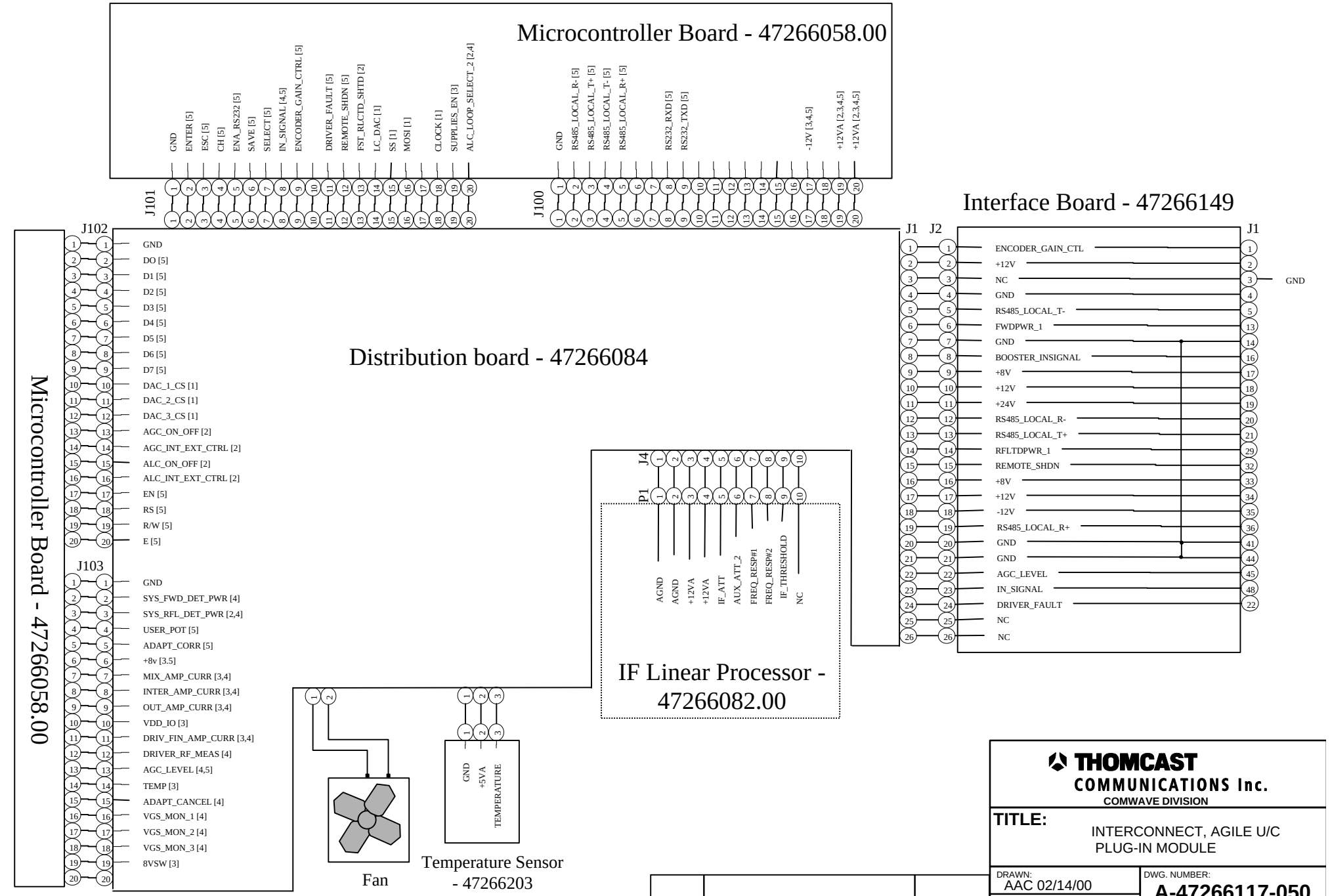

REV	Description	ECO# NAME/DATE

THOMCAST COMMUNICATIONS Inc.
COMWAVE DIVISION

TITLE: INTERCONNECT, AGILE U/C PLUG-IN MODULE

DRAWN: AAC 02/14/00
CHECKED: ????????
RELEASED: Name / date

DWG. NUMBER: **A-47266117-050**

Scale: none | Sheet 2 of 2 | **REV: P1**

MICROWAVE PRECORRECTOR MODULE

Built in a 3” X 6” housing, this module consists of two compartments: a RF and DC & Control section; they are placed in opposite sides of the housing. Two harnesses, a seven and ten conductor, reach the interior of the module on the control side.

RF Section:
This section is implemented essentially by microwave broadband amplifiers (U1-U4 and U6-U7) and hybrids (HYB1-HYB7). All amplifiers are biased through resistors from the only power supply voltage and use quarter-wavelength transformers and a capacitor for de-coupling.

DC and Control Section:
A variety of electronic components are used to control the RF signal processing that takes place in the RF section. Externally accessible potentiometers and switches allow adjustments and changes in the module modes of operation.

Correction is performed by subtraction of a pre-generated distortion from the one present at the output of the system. A RF input signal at about 0dBm-power level is applied to J1. This signal is amplified and split two ways; one goes through a linear path while the other goes through the circuitry that generates the desired pre-distortion. Both signals are combined and amplified to recover the losses of their processing. Finally, the signal goes through the broadband attenuator that performs the ALC and is routed out the module through J2. Table 1 summarizes each control accessible from the top of the module. Module control through external voltages delivered via connector P2 is also possible.

Table 1: Microwave precorrector adjustment controls.

NUMERICAL REFERENCE	NAME	FUNCTION
1	J1	RF Input
2	J2	RF Output
3	AUTO / MAN Switch	Sets the power control mode
4	D.G.	Control for pre-distortion signal amplitude
5	CANC1	Module internal cancellation adjustments
6	CANC2	Module internal cancellation adjustments
7	PH. ADJ	Adjust the phase of the pre-distortion
8	AUTO	Adjust output power in ALC mode
9	MAN	Adjust output power in manual mode
10	PWR LMTR	Adjust maximum output power achievable by the system
11	PC ON / OFF	Sets pre-correction On or Off
12	P1	+12V, ALC voltage (connector)
13	P2	External voltages for adjustments (connector)

All information contained in this document is confidential and proprietary to THOMCAST and shall not be disclosed without the prior written permission of THOMCAST.

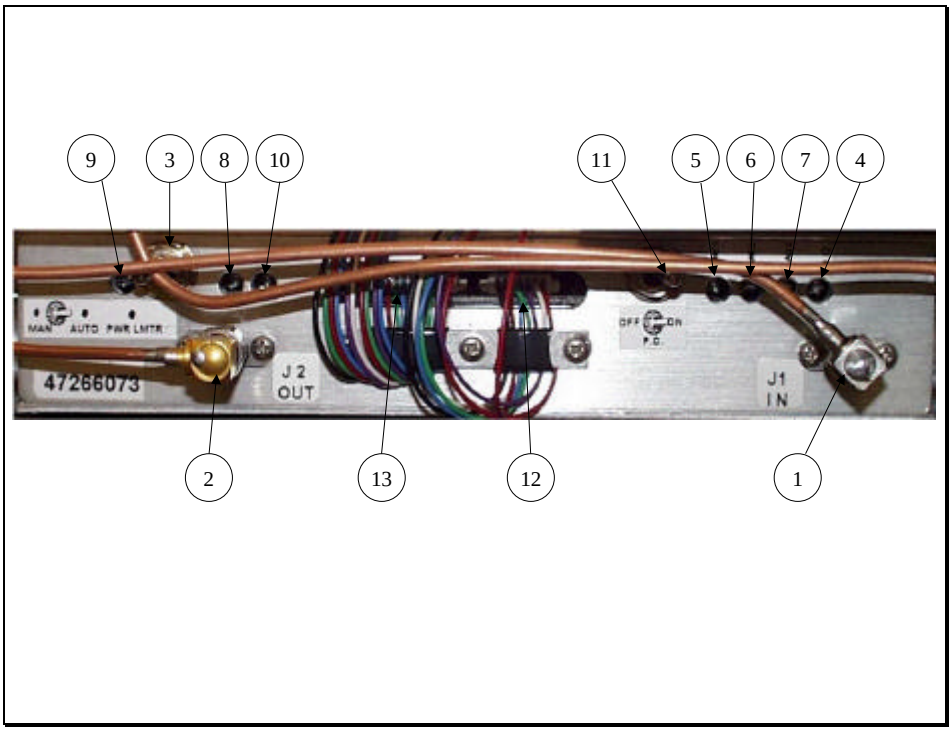

Figure 1: 47266073 microwave precorrector.

Table 2: Specifications.

Parameter	*Specification*	*Notes/Test Conditions*
	RF	
Gain	-8 dB min / 3 dB max	1.8 to 3.6 GHz (function of ALC)
Input Return Loss	< -10 dB	1.8 to 3.6 GHz
Total Flatness	± 3 dB	1.8 to 3.6 GHz
Power Limiter	Pmax = nominal power +1 dB	ALC on or off
Distortion Generation	-60 dBc to -32 dBc	1.8 to 3.6 GHz 1 carrier, 64 QAM, spectrum analyzer @ 100 KHz RBW
Cancellation	>25 dBc	1.8 to 3.6 GHz 1 carrier, 64 QAM, spectrum analyzer @ 100 KHz RBW
Phase Range	>45º adjustment	1.8 to 3.6 GHz
	DC	
Power Supply	12 ± 0.5 V	
Current	.6 A	S21 = 2dB; Maximum pre-distortion
	GENERAL	
Impedance / Connector Input Output	 50 Ω / Female SMA 50 Ω / Female SMA	
Operating Temperature	0° C to 50° C	

SPECIFICATIONS ARE SUBJECT TO CHANGE WITHOUT NOTICE.

All information contained in this document is confidential and proprietary to THOMCAST and shall not be disclosed without the prior written permission of THOMCAST.

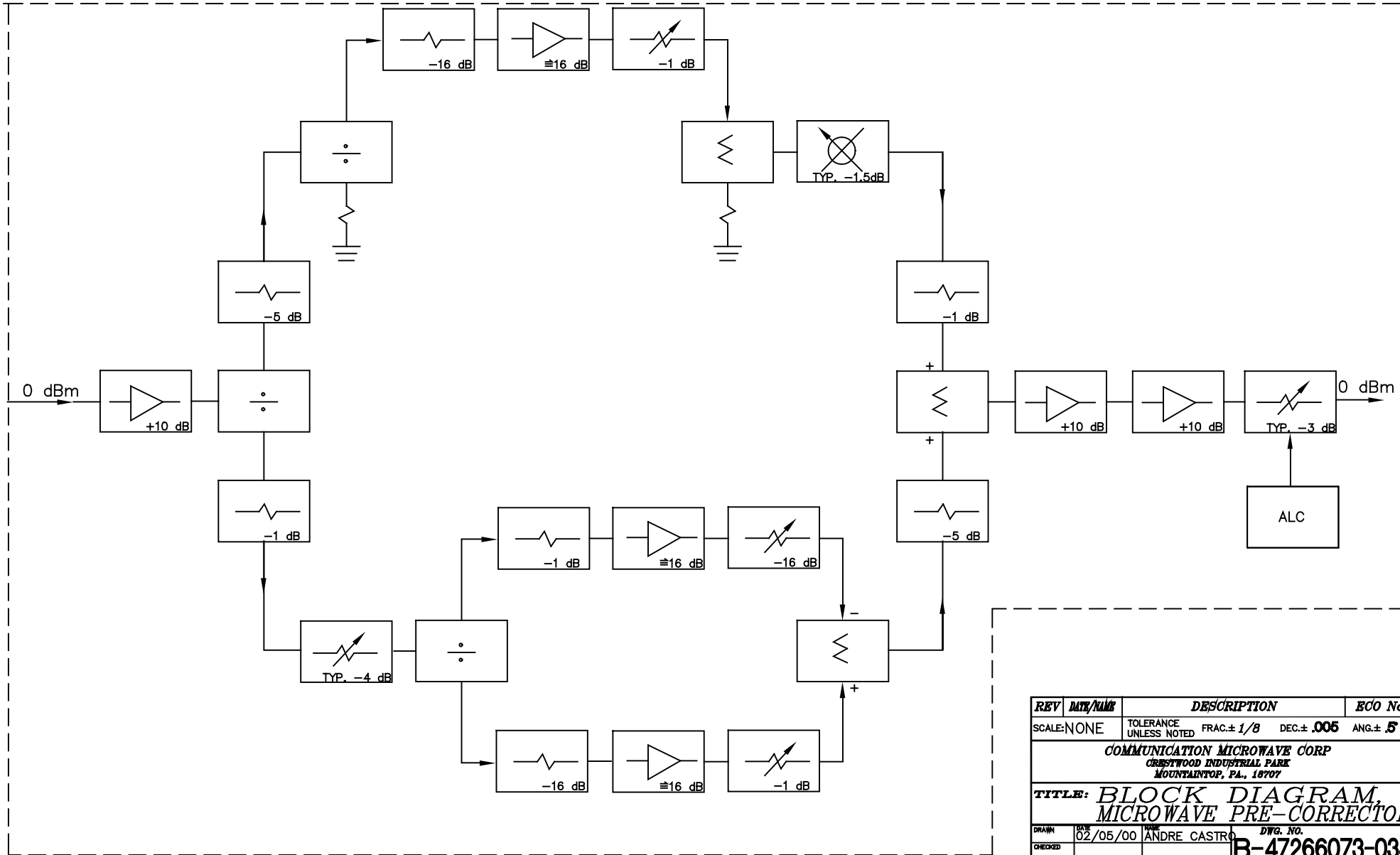

REV	DATE/NAME	DESCRIPTION	ECO No.

SCALE: NONE | TOLERANCE UNLESS NOTED FRAC.± 1/8 DEC.± .005 ANG.± .5°

COMMUNICATION MICROWAVE CORP
CRESTWOOD INDUSTRIAL PARK
MOUNTAINTOP, PA., 18707

TITLE: BLOCK DIAGRAM, MICROWAVE PRE-CORRECTOR

	DATE	NAME
DRAWN	02/05/00	ANDRE CASTRO
CHECKED		
PROTO TYPE RELEASE		
PILOT PROD. RELEASE		
PRODUCTION RELEASE		

DWG. NO. B-47266073-034

SHEET: 1 OF 1

Pilot Qty:

PROTO TYPE REVISION P1

REV. P1

UPCONVERTER PLUG-IN MCU STATE MACHINE, FIRMWARE DESCRIPTION

The MCU assembly and its firmware monitor various parameters, conditions, and commands in the plug-in module. The firmware uses the pass/fail states of the parameters to determine the operating state of the plug-in.

In the normal AUTO mode of operation, the operating state of the plug-in is used to determine the control settings for the plug-in. Following a RESET, the firmware enters an INIT (initialization) state, in which the initialization of registers and network operations is performed, DOC13-0188 discusses this in more detail. Following INIT, the plug-in enters the STANDBY state. In STANDBY, the RF power output of the upconverter plug-in is disabled, and settings for the various internal modules are set for minimum gain.

Unless commanded to remain in STANDBY, the plug-in will enter the STABILIZE state, allowing the unit to come up to desired operating power without transient failures. After a short stabilization period, the plug-in enters the OPERATE state. In this state, full output power is produced, and pre-correction and gain controls are operational.

As the conditions of the measured parameters change, the state is modified accordingly. For example, if signal presence is lost, the plug-in will enter the STANDBY state and will remain in that state until the signal returns. Once signal returns, if no other failure conditions exist, the plug-in will transition through STABILIZE to the OPERATE state. If a reflected power sample is found outside of the passing range while the plug-in is in OPERATE, the state is changed to LIMP to attempt to provide reduced output power, thereby reducing the reflected power.

Other failures that may result in unsafe operation or damage to the plug-in or system cause the plug-in to enter the FAILED state. The firmware may perform multiple tests of a failing parameter before deciding to enter FAILED to reduce the effects of transients. In the FAILED state, RF output power and DC supply to the plug-in output amplifiers are disabled. The firmware cannot exit the FAILED state without user intervention.

During factory calibration or customer site installation, the plug-in may be operated in MANUAL mode. In MANUAL mode, the operating state is continually updated, but the state is not used to determine the control settings of the plug-in. The control settings remain set as they were when the MANUAL mode was entered until overridden by user commands. The user may adjust key plug-in settings to optimize plug-in performance and modify behavior, and the settings may be stored in non-volatile memory or discarded.

All information contained in this document is confidential and proprietary to THOMCAST and shall not be disclosed without the prior written permission of THOMCAST.

UPCONVERTER PLUG-IN FIRMWARE DESCRIPTION

The microcontroller (MCU) assembly and its operating program (firmware) handle internal monitoring functions in the plug-in. The flow of execution of the program used in this chassis is described below. The firmware program is contained in non-volatile memory on the MCU board.

The firmware begins execution after a RESET or power-up. The firmware instructs the MCU to initialize various MCU registers and hardware ports, including the A/D converter. Following this, a lamp test operation is performed. All chassis front panel LED's are illuminated for approximately 1 second then darkened. The lamp test allows a quick verification that all front panel LED's are functioning. In addition, the lamp test is a clear outward sign that the MCU board is receiving power, is executing the firmware program, and has recovered from RESET. Shortly after the lamp test, the LED's will display chassis status as determined by firmware tests.

Following the lamp test, program variables and measurement records are initialized. The initialization assures integrity of records used to hold test data and communication messages. Following the initialization, the firmware starts the MCU network functions. This process configures the MCU communication port, and instructs the MCU how handle incoming messages. The firmware also checks an internal memory register to determine whether an RS-485 network node address for this MCU assembly has been set. The network node address will either be the value found in this register, or if no value has been set, a default value.

All aforementioned tasks are performed once after RESET. Following these tasks, a program loop is entered that handles monitoring and communications tasks, as described below. The loop may be temporarily interrupted by incoming communication messages. RESET ends the loop and restarts program execution.

The firmware determines the condition of key parameters such as reflected power and signal presence by taking samples of signals of interest applied to the MCU board. Analog signals are measured using the MCU A/D converter, while logic inputs are monitored with either the MCU or CPLD . The samples are tested against numerical limits, and a pass/fail status is determined for each monitored signal. The firmware uses the pass/fail states of the parameters to determine the operating state of the plug-in. The operating state of the plug-in is used to determine the control settings for the plug-in. See documents DOC13-0187 and DOC21-0021 for a description of the firmware state machine and its effect on the control of the plug-in.

The measurements of parameters and other operating information (status) are compiled by the firmware in a memory table. This status table may be sent as a communication message to the System Controller or to a PC-based user interface application. The System Controller or the user application sends a status query message to the plug-in and receives the status table in response.

At any time during firmware execution, a communication message may be received by the MCU. This results in an interruption of program execution, allowing the firmware to quickly collect and store the incoming message. Firmware execution then returns to the point following the interruption. After a complete message has been collected by the firmware, a response is constructed by the firmware and sent by the MCU under firmware command.

In addition to the status query, other commands may be issued to the plug-in:

- STANDBY command - causes output power to be disabled
- ON AIR command - re-enables the plug-in output power
- RESET command - causes the firmware to restart execution

Additional commands are used during factory alignment and customer site installation to optimize equipment performance. The commands provide calibration settings that are stored by the MCU in non-volatile memory. The calibration settings are accessed during firmware operation to set the various plug-in systems into the calibrated operating condition after a RESET.

All information contained in this document is confidential and proprietary to THOMCAST and shall not be disclosed without the prior written permission of THOMCAST.

LO PLUG-IN MODULE THEORY OF OPERATION

The LO plug-in module is superceded by the Agile Synthesizer Drawer in the application. Please refer to the manual for the Agile Synthesizer Drawer, DOC33-0037 for a discussion of the LO.

Figure 1: Agile Synthesizer Drawer.

All information contained in this document is confidential and proprietary to THOMCAST and shall not be disclosed without the prior written permission of THOMCAST.

POWER SUPPLY MODULE THEORY OF OPERATION

The power supply module uses the latest technology and is equipped with the following features:

- Single-chip embedded microcontroller monitoring and control.
- RS-232 front panel connector for quick interface to desktop computer.
- Modular, hot swap assembly.

The above features offer quick and simple monitoring functions and provide expedient assembly and repair time.

Figure 1: Plug-in power supply module.

The DC power supply module receives 48 V_{DC} from an external front end power supply and converts it into the working voltage and power requirements necessary to operate the driver. Additionally, the power supply houses the system controller CPU card that organizes network messages between the driver modules, power amplifier segments, and the ComView monitor and control system. See DOC13-0175 for a more detailed discussion of the system controller card, DOC13-0185 for a discussion of the system controller cards firmware, and DOC13-0173 for a discussion of the embedded controller.

The power supply module contains a single chip embedded controller, it constantly monitors the performance of the power supply and external controls. The embedded controller processes this information and decides the operational control of the module then informs the system controller of the power supply's operational status.

The power supply is cooled by a single fan, and is mounted in an extrusion designed to dissipate the heat generated from the components within. The fans of the sub-chassis also ventilate the power supply plug-in module; for additional protection, the embedded controller monitors the temperature of the plug-in. If the plug-in module is operating over temperature, controlled shut down of the power supplies within will occur.

The plug-in module consists of three circuit boards, the converter board with the embedded controller, system controller board, and display board, which needs no further explanation. A brief discussion of each board's task(s) follows:

> The core of the module is the DC converter PCB. The DC converter board mounts overtop a DC to DC converter module, which transforms the $48V_{DC}$ input voltage into $+12V_{DC}$. The DC converter PCB produces the remaining voltages needed to operate the driver from the 12 V_{DC}.
>
> The embedded controller mounted on the DC converter PCB, monitors the voltages and currents from the power supply and controls the output based upon voltage and current measurements. It will switch off the

All information contained in this document is confidential and proprietary to THOMCAST and shall not be disclosed without the prior written permission of THOMCAST.

positive voltages to the driver when a loss of negative voltage is detected in order to protect amplifier devices that are located within the upconverter / amplifier plug-in.

Mounted directly above the DC converter PCB is the system controller PCB. It receives its operating power directly from the DC converter PCB. Additionally, the DC converter PCB routes the RS-485 communication networks between the system controller to the back plane connector in the rear of the chassis and eventually to other modules within the driver, as well as the ComView monitoring system.

The power supply module can be divided into the following five major categories:

1. The power supplies provide the operating voltages needed to power the driver.
2. The power supply enables turn the power supply voltages on and off when commanded by the embedded controller.
3. The current and voltage monitoring circuit samples the operating parameters of each power supply and conditions them into the required voltage range within the analog to digital converters of the embedded controller.
4. A temperature sensor provides input to the microcontroller proportional to the ambient temperature of the module.
5. The embedded controller controls and monitors the performance of the module.

More detailed discussions of the above categories can be found in subsequent documents.

FRONT AND REAR PANEL DESCRIPTIONS

Front Panel

Refer to Figure 2 for numerical references.

1) COMM PORT: RS-232 Communications port for communication to a PC.

2) LED's: Status monitoring LED's which provide visual indication of operating parameters.

   a) Power
      i) GREEN = receiving power from the front end power supply
      ii) UNLIT = no power from the front end power supply
   b) DC Power
      i) GREEN = output power is present
      ii) UNLIT = no output power

3) FAN: 18-CFM DC for plug-in module cooling only.

4) THUMB SCREWS: Secure module to the sub-chassis and provide a reliable ground connection; loosen to remove module for replacement or repair.

5) HANDLE: Assists in removing module from sub chassis.

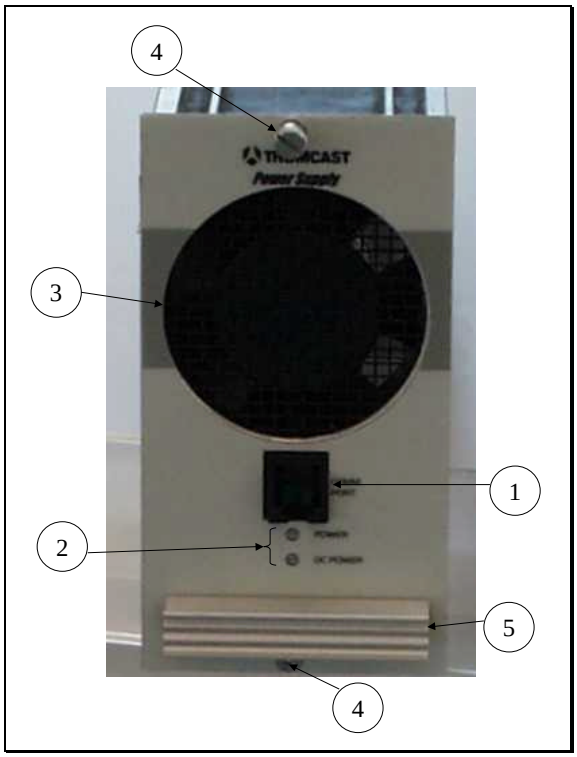

Figure 2: Power supply module front panel.

All information contained in this document is confidential and proprietary to THOMCAST and shall not be disclosed without the prior written permission of THOMCAST.

Rear Panel

Refer to Figure 2 for numerical references.

1. 48 PIN DIN: Interface to the back plane, (all power, control and diagnostics)

2. POWER CONNECTOR: 6-pin header, for power from the front-end power supply.

3. HEATSINK: Aids in dissipation of heat generated within the plug-in module.

4. GROUND / ALIGNMENT STUD: Ensures that proper ground is made prior to engaging the 48 pin DIN; also aids in the alignment of the module within the sub-chassis.

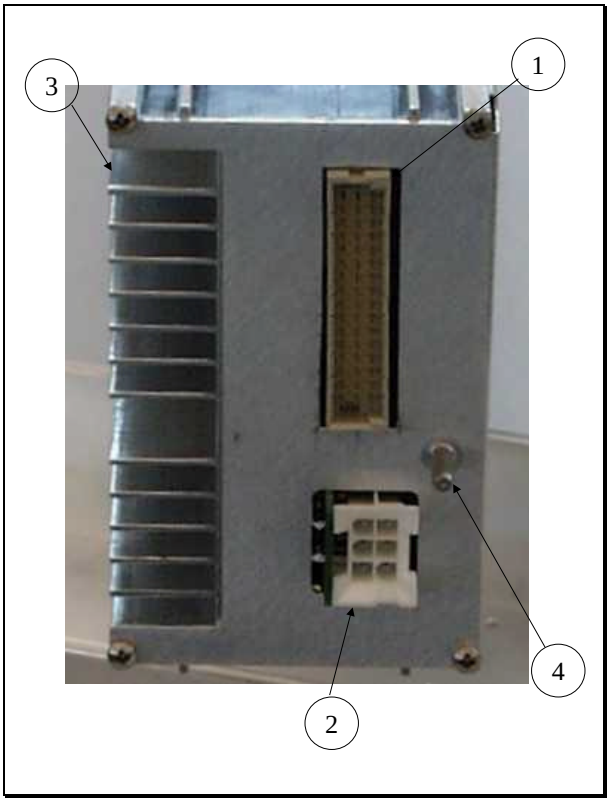

Figure 3: Power supply module rear panel.

All information contained in this document is confidential and proprietary to THOMCAST and shall not be disclosed without the prior written permission of THOMCAST.

POWER SUPPLY PLUG-IN MODULE SPECIFICATIONS

Parameter	*Specification*	*Notes/Test Conditions*
	INPUT	
Input Voltage	48 V_{DC}	
Input Current	4 amps maximum	@ low line, full rated power
Peak Inrush Current	≤ 6 amps	
Efficiency	85% typical	@ full load
	OUTPUT	
Output Voltage	Main Output $12V_{DC}$ ±.5 $+8V_{DC}$ ±.5 $+24V_{DC}$ ±.5 $-12V_{DC}$ ±.5	All voltages are fixed.
Output Current	Main Output +12V @ 4amps +8V @ 3.0 amps -12V @ .4amps +24V @ .3amps	Power from the supplies is interrupted when the power supplies are overloaded.
Output Power	Main Output +12V @ 60Watts + 8V @ 24 Watts -12V @ 5Watts +24V @ 7Watts	Power from the supplies is interrupted when the power supplies are overloaded.
Ripple & Noise	≤200mv pp	20MHz BW
Line Regulation	.4% over entire AC input range	
Load Regulation	.4% no load to full load	
	PROTECTION	
Over Voltage	The power supply will shut off if the voltage exceeds the nominal voltage by 20%.	
Over Current	The power supply will shut off if the current exceeds the maximum value.	
Over Temperature	The power supply will shut of if the temperature exceeds 70°C. Restart is automatic when power supply returns to normal operating temperature.	
Power Input Interlock	Interlock system assures power disconnects during module insertion or extraction.	
	ENVIRONMENTAL	
Cooling	Forced air-cooled, minimum of 15 CFM required	Forced air-cooled drawing ambient air through the intake on the front of the power supply and exhausting out the rear.
Operating Temperature	0°C to 50°C	
Relative Humidity	0 to 95% non-condensing	

All information contained in this document is confidential and proprietary to THOMCAST and shall not be disclosed without the prior written permission of THOMCAST.

Parameter	***Specification***	***Notes/Test Conditions***
ALARMS / INDICATORS / AJUSTMENTS / CONTROLS		
DC Output Failure Alarm	TTL Low = DC Output Failure	Signal available at back-plane
DC-OK Indicator	Green LED, ON= DC OK	Visible via front panel
AGENCY COMPLIANCE		
Safety	Meets UL and CSA approvals	(pending)
PHYSICAL		
Weight	4 lbs. (1.81Kg)	
Front Panel Color	Matches Sherwin William's Paint No. Light Gray ……..F63TXA2555 Medium Gray ….F63TXA4841	Paint mix number 4303 identifies store location when added to Paint No. Lexan overlay color matched as indicated
Mechanical Dimensions	4.75"H x 3.0"W x 17.5"D 12.07 cm H x 7.62 cm W x 44.45 cm D	

All information contained in this document is confidential and proprietary to THOMCAST and shall not be disclosed without the prior written permission of THOMCAST.

POWER SUPPLY PLUG-IN MODULE BLOCK DIAGRAM

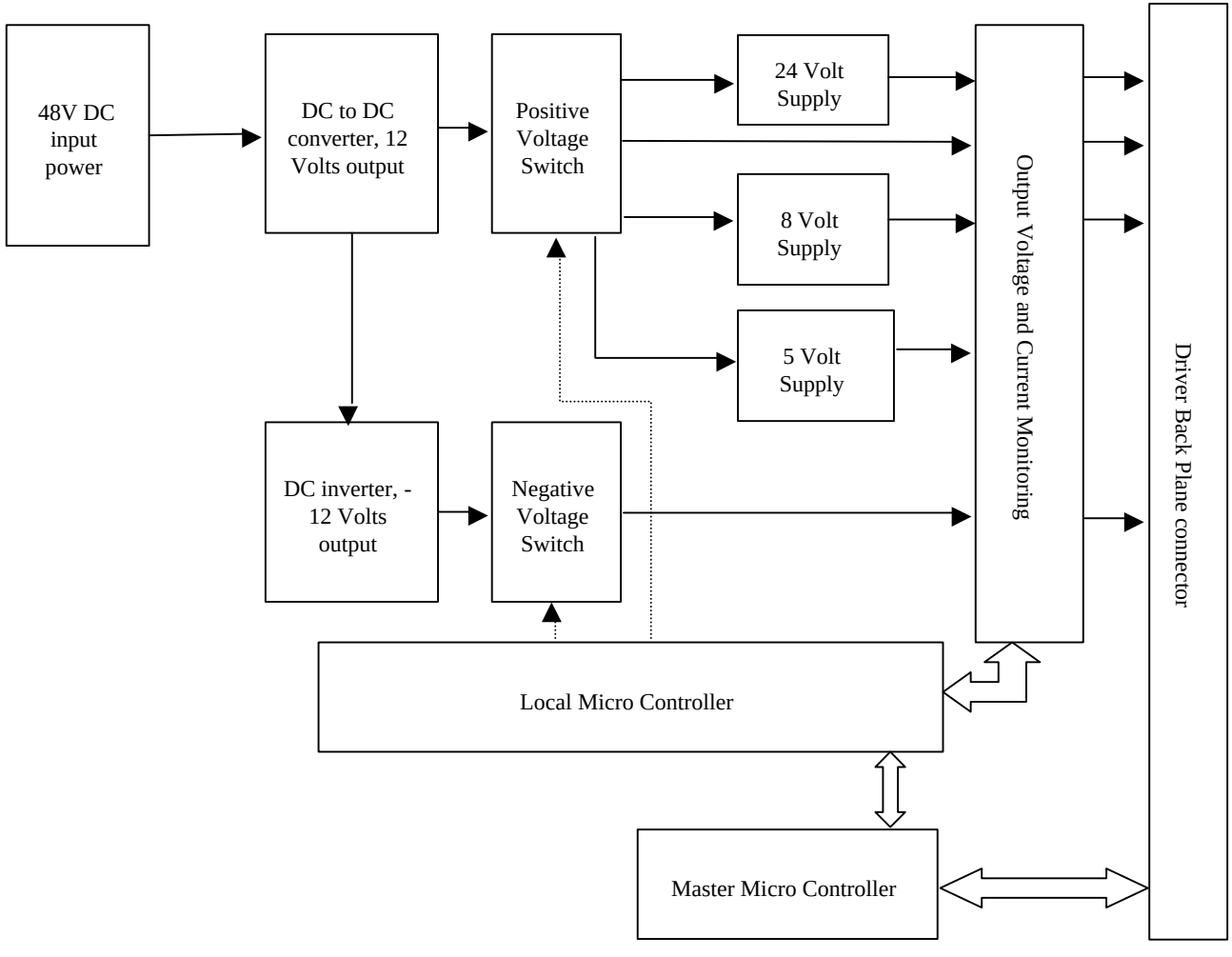

All information contained in this document is confidential and proprietary to THOMCAST and shall not be disclosed without the prior written permission of THOMCAST.

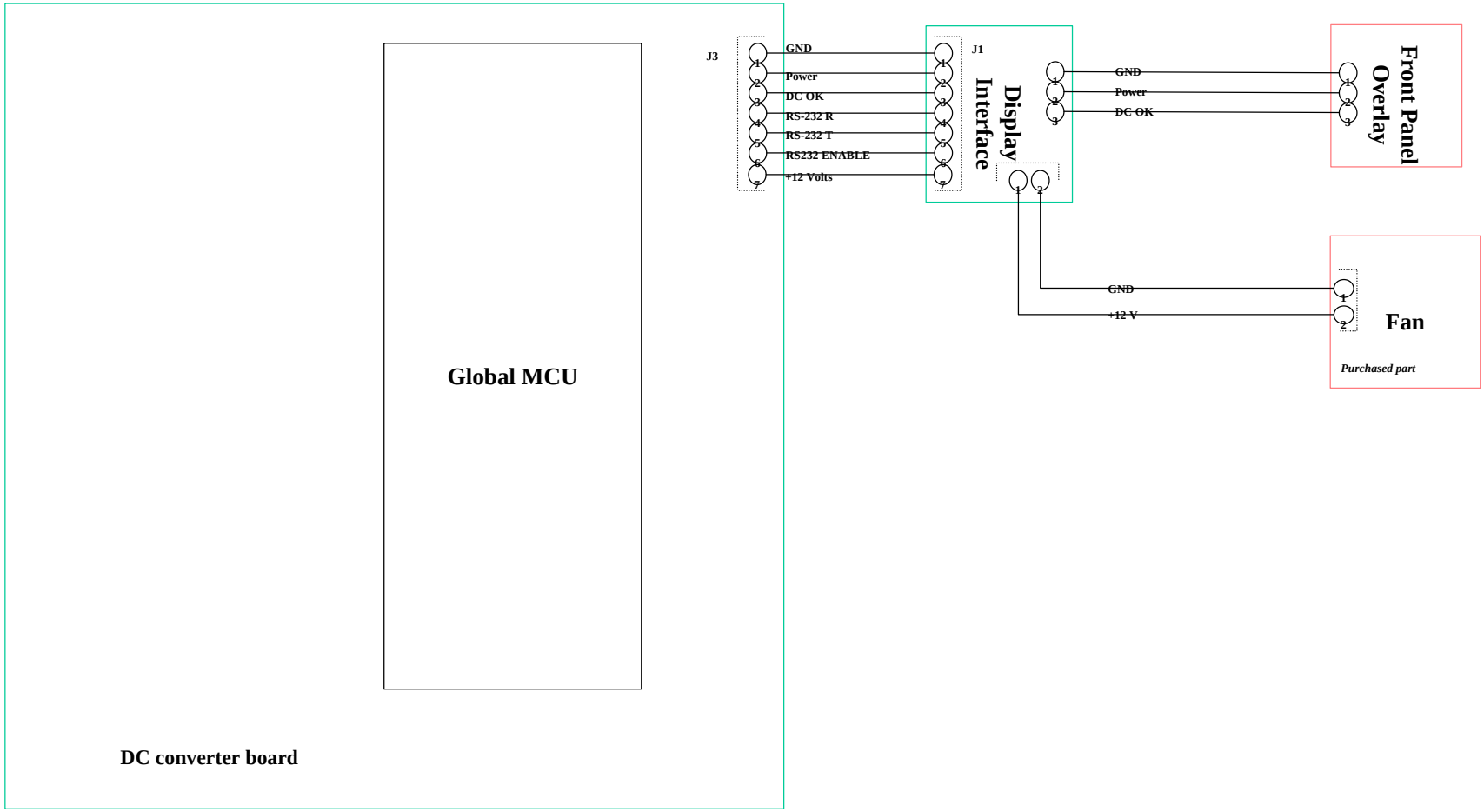

THOMCAST COMMUNICATIONS Inc.
COMWAVE DIVISION

TITLE: Interconnection, Power Supply Module w/ DC Font end.

REV	Description	ECO# NAME/DATE

DRAWN: CTS / 8-24-99
CHECKED: KAS / 1-27-00
RELEASED: PRC / 2-11-00

DWG. NUMBER: B-47266099.02-050

Scale: none | Sheet 1 of 2 | REV: A

POWER SUPPLY MODULE EMBEDDED CONTROLLER

Reset Circuitry

Two integrated circuits monitor the condition of the $5V_{DC}$ power source; additionally they monitor the closure of the reset jumper. When the jumper is shorted, or the $5V_{DC}$ power supply falls below a preset threshold, a reset line goes low.

The reset line is tied directly to the reset input of the controller. When this voltage transitions from TTL high, to TTL low, and returns high, the embedded controller will reset and begin executing instructions from the designed initial turn on procedures.

Node Address Switches

Node address switches located on the DC converter PCB apply TTL high and low signals into the embedded controller's input port C. The controller reads the settings of the switches to determine the node address that the module will report to as a node device within the RS-485 network.

Alternately, the node address can be directly programmed into the firmware or EEPROM of the embedded controller, and the node address switches can be used to set operational characteristics of the module for diagnostic aids.

RS-485 Communications

Communications between the embedded controller and the RS-485 network are handled via a Universal Asynchronous Receiver-Transmitter (UART). The UART communicates with the microcontroller via the Serial Peripheral Interface (SPI) built into both devices. When a byte from the message arrives on the RS-485, the UART stores the information in memory, and generates an interrupt to the embedded controller. The embedded controller services the interrupt by transferring the byte from the UART to the microprocessor. The microprocessor assembles the message, byte by byte within its own memory.

To send a message to the RS-485 network, the microprocessor sends a byte of the message to the UART through the SPI. The UART sends the byte onto the network. This process is completed, byte by byte, until the entire message is sent across the RS-485 network.

RS-232 Communications

The communication from and to the RS-232 port is handle via the Serial Communications Interface (SCI) of the microcontroller, and an RS-232 line driver. The RS-232 line driver conditions the SCI signals for output onto the RS-232 network, and in turn returns an RS-232 logic signal to the TTL logic required for the SCI to process the message. The SCI within the microcontroller assembles the byte and generates an internal interrupt within the microprocessor. The microprocessor then stores the byte with memory to assemble the message.

To send a message to the RS-232 network, the message is written byte by byte onto the RS-232 register, and this sends the messages onto the network.

Front and Rear Panel indicators

The embedded controller writes status information into a latching line driver. The outputs of this latching line driver drive the positive and negative power supply enables. Additional outputs from the line driver supply the power to illuminate the LED's installed within the front panel overlay, also a rear-panel fault alarm is provided to the rear panel.

All information contained in this document is confidential and proprietary to THOMCAST and shall not be disclosed without the prior written permission of THOMCAST.

SYSTEM CONTROLLER FIRMWARE

The system controller firmware is responsible for monitoring the operational parameters of the chassis with the network. The system controller routinely services each module within the driver, and the status of the module is determined. A table of information is kept for the status of each device within the driver, and an overall status is determined for the driver chassis as an entity. When the ComView remote monitoring program queries the status of the driver, the system controller returns the status of the operational parameters to ComView

MODES OF OPERATION

Scan mode

The normal mode of operation for the system controller is the scan mode. The controller takes charge of the local RS-485 bus, and operates network messaging.

When the firmware is in the scan mode, the system controller sends out a status request to each module sequentially, each module then responds with its current status; the system controller stores and processes this information. This cycle repeats until all of the modules in the network are serviced, the scanning process is then repeated.

When ComView requests the status of the driver chassis, the controller provides the information that was gathered and determined from each module.

Service mode

This mode of operation applies when the ComView application is suspended, and a calibration program is launched from a desktop PC.

The calibration application works with one module at a time within the driver. When this mode of operation is active, the system controller stops the scanning process. Messages from the calibration program are received from the remote RS-485 network, and relayed onto the local RS-485 network; the system controller does not modify this message. When the module processes the message routed through the system controller, it replies to the controller through the local RS-485 network. The system controller then relays this message to the remote RS-485 network, which, in turn relays it back to the desktop PC running the calibration application.

In this mode of operation the system controller appears transparent to both the module and the Desktop PC.

Local RS-485

The local RS-485 bus is the network that all of the modules within a system controller connect to and utilize for intercommunication during normal operation.

Remote RS-485

The remote RS-485 bus is the network that the driver provides to the outside world.

This network is primarily used for the remote monitoring and control provided by ComView. This port can also be used for calibrations and system settings that mirror each module's front panel RS-232 connector.

All information contained in this document is confidential and proprietary to THOMCAST and shall not be disclosed without the prior written permission of THOMCAST.

POWER AMPLIFIER SEGMENT THEORY OF OPERATION

The power amplifier segments of the high power single channel transmitter series or broadband booster series use the latest technology in power FET's. The transistors provide high output power, as well as more linearity and higher efficiency. Mechanically, the power amplifier segments have a plug-in architecture that allows hot replacement. In addition to hot replacement, the architecture of the amplifier enables flexibility to tailor the system to higher output power levels and can be easily upgraded.

The power amplifier segment consists of a microwave amplifier[2], control board[1], DC to DC converter[3], and a front panel. A microcontroller system, located on the control board, supervises and controls the power amplifier segment in each of its functions. The DC to DC converter reduces 48 V_{DC} front-end power supply input to the nominal amplifier voltage of 10.5 V. The front panel displays the status of the amplifier segment and interfaces the control board to a computer by means of a serial RS-232 port[4]. See Figure for numerical references.

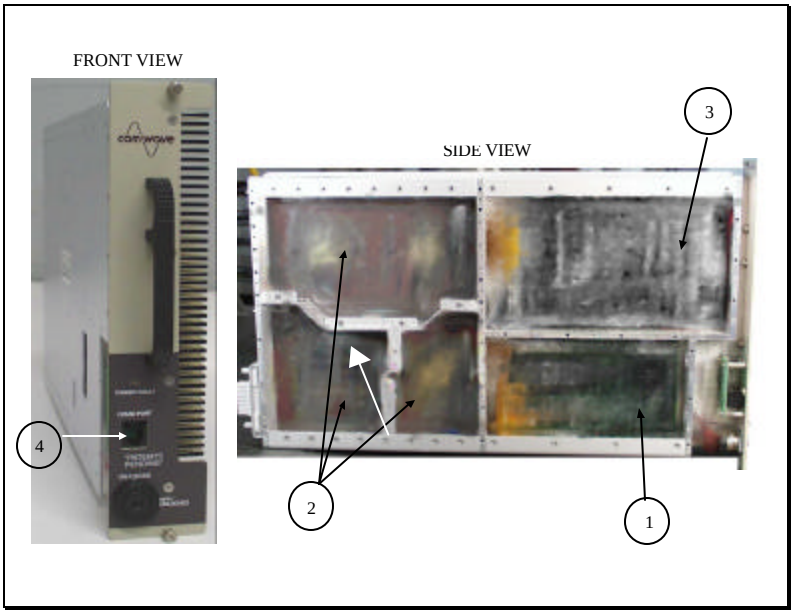

Figure 1: Power amplifier segment.

OPERATION

The amplifier segment is equipped with a key lock switch on the front panel to retain it in place. When pushing-in or pulling-out the Segment, turn the key lock switch to the OFF position. After plugging the amplifier segment into the sub-rack and tightening the front panel thumbscrews, turn the key-lock switch to the ON position. The 10 V_{DC} secondary power supply will start up the control board, which applies a negative voltage to the gates of the FET's and turns the DC to DC converter on. It also adjusts the transistor's current and releases the input signal to the microwave amplifier. The airflow passes through the heatsink from the front to the rear of the sub-rack. The airflow loss to the other power amplifier segments during hot replacement is negligible.

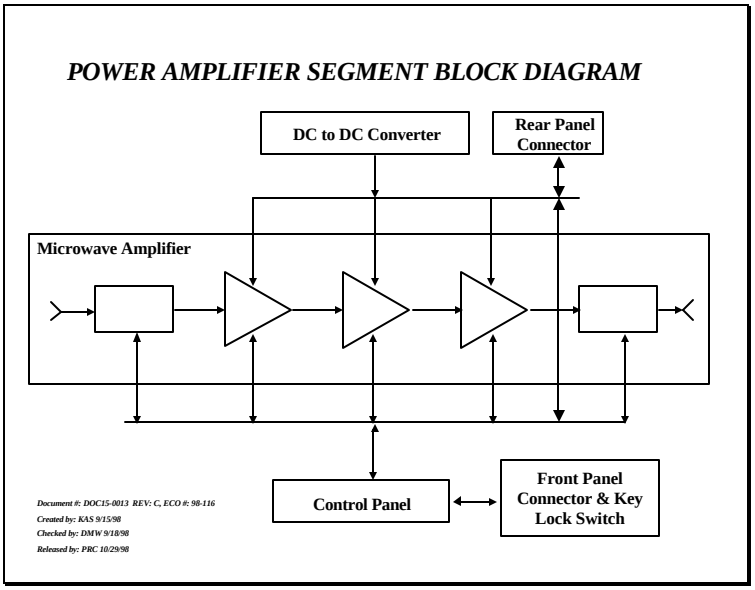

Figure 2 : DOC15-0013 power amplifier segment block diagram.

All information contained in this document is confidential and proprietary to THOMCAST and shall not be disclosed without the prior written permission of THOMCAST.

POWER AMPLIFIER SEGMENT SPECIFICATIONS

Table 1: DOC19-0014, REV D.

PARAMETER	*SPECIFICATION*
Primary Voltage	48 VDC
Primary Current	4.9 A
Secondary Voltage	10 ±0.5 VDC
Secondary Current	400 mA
Communication Port	RS-232 and RS-485
Input Power Digital Analog	 12.0 dBm 17.5 dBm (@ POut1dB)
Output Power Digital Analog	 41.5 dBm 47.0 dBm (@ POut1dB)
DC Connector	Floating Molex p/n 15-06-0141
Impedance / RF Connector	50 O / Blindmate
Operating Temperature	0° to 50° C
Dimensions	10.3” H x 2.1” W x 17.1” D 26.16 cm H x 5.33 cm W x 43.43 cm D
Approximate Weight[1]	10 lbs (4 Kg)

SPECIFICATIONS ARE SUBJECT TO CHANGE WITHOUT NOTICE.

[1] Weight doesn’t include shipping material.

All information contained in this document is confidential and proprietary to THOMCAST and shall not be disclosed without the prior written permission of THOMCAST.

AMPLIFIER SEGMENT STATE FLOW DIAGRAM

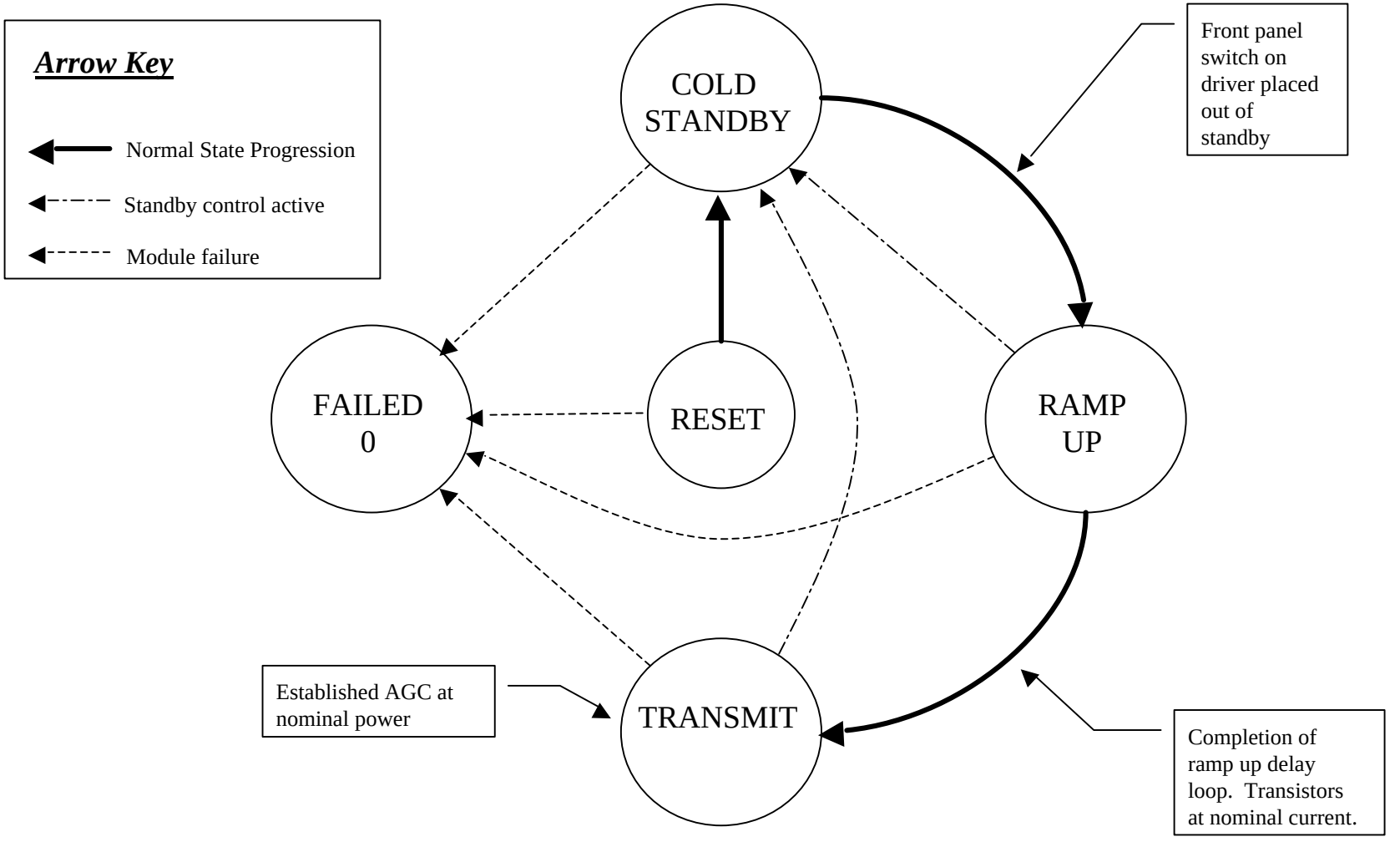

Created by: Kimberly Simeone 11/23/98	***Checked by: Christian Smith 11/23/98***	***Released by: Donald Wike 11/23/98***

Document #: DOC21-0006

REV: A

All information contained in this document is confidential and proprietary to COMWAVE and shall not be disclosed without the prior written permission of COMWAVE.

FIRMWARE FLOWCHART

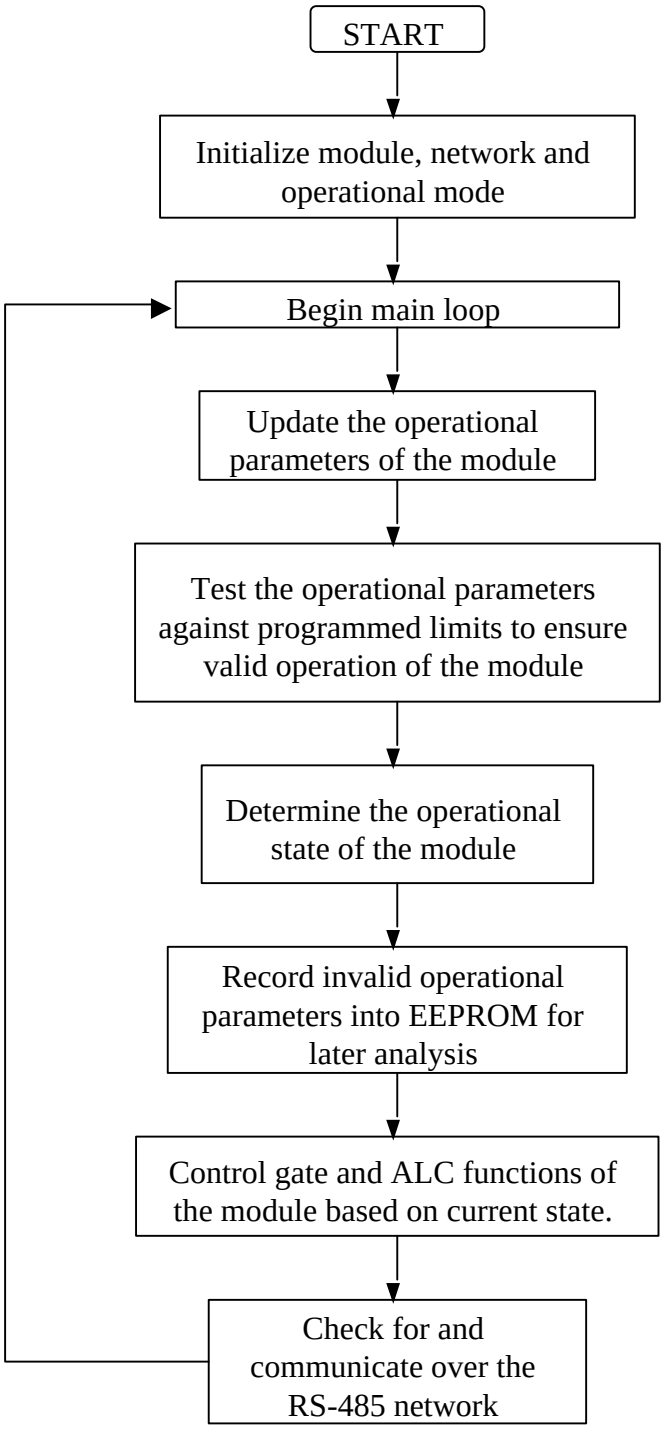

All information contained in this document is confidential and proprietary to THOMCAST and shall not be disclosed without the prior written permission of THOMCAST.

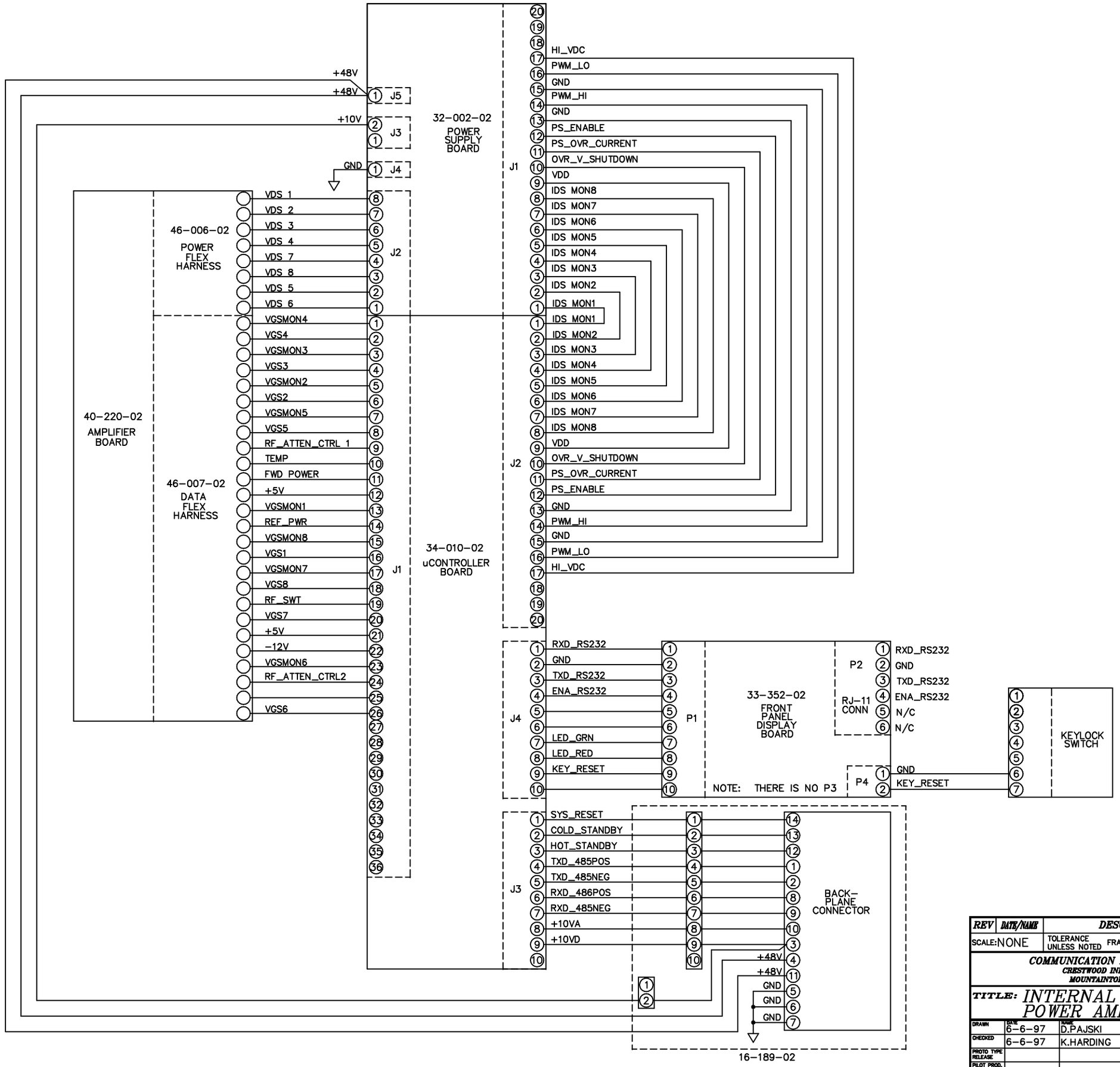

REV	DATE/NAME	DESCRIPTION	ECO No.
SCALE: NONE	TOLERANCE UNLESS NOTED	FRAC.± 1/8 DEC.± .005 ANG.± .5	

COMMUNICATION MICROWAVE CORP
CRESTWOOD INDUSTRIAL PARK
MOUNTAINTOP, PA., 18707

TITLE: INTERNAL INTERCONNECT, POWER AMPLIFIER SEGMENT

	DATE	NAME	
DRAWN	6-6-97	D.PAJSKI	DWG. NO. C-66-306-01
CHECKED	6-6-97	K.HARDING	SHEET: 1 OF 1
PROTO TYPE RELEASE			
PILOT PROD. RELEASE			Pilot Qty:
PRODUCTION RELEASE	8-11-97	A.BRAGALONE	PROTO TYPE REVISION P1=A — REV. A

SECTION 5

PREVIOUS
Print

CUSTOMER SERVICE

CONTACT INFORMATION
DURING BUSINESS HOURS
Inquiries may be directed to Thomcast Communications, Comwave Division during business hours, 8 am to 5 pm Monday through Friday. When the automated attendant answers you will be given the option of dialing your party direct or speaking with the operator.

AFTER BUSINESS HOURS
If you need emergency assistance due to equipment shutdown or malfunction, customer support personnel are available 24 hours a day. Call Comwave at one of the numbers listed below; when the automated attendant answers press 6, leave your name, company name, phone number, equipment model number(s), and a brief description of the problem you're encountering. When you hang up the system will automatically page the on-call technician who will then return your call in a timely manner. You can listen to the message prompt for other options as well, however, for emergency assistance you MUST use option 6.

Thomcast Communications, Comwave Division **Crestwood Industrial Park, 395 Oakhill Road** **Mountaintop, PA 18707**	
1-800-266-9283	USA & Canada
1-570-474-6751	International[1] & USA
(Please note, as of 12/98, our area code changed from 717 to 570)	
1-570-474-5469	FAX
(Please note, as of 12/98, our area code changed from 717 to 570)	

COMMENTS/SUGGESTIONS
Please forward comments regarding documentation content and/or layout, or suggestions to improve Comwave publications to ksimeone@thomcastcom.com.

EQUIPMENT RETURNS
If the equipment requires return for factory service, please follow the guidelines listed. Thomcast cannot be held responsible for damaged equipment received due to improper packing; contact Thomcast with any questions or concerns.

1. ***Contact Comwave:*** Call Comwave to report the problem and to **obtain a "Return Authorization" number[2] (RA).** This enables accurate tracking and identity of returned equipment for prompt and efficient service.

2. ***Obtain packaging materials:*** Use original boxes and packing materials when returning any equipment. This will safeguard against most in-transit damages. If original boxes and packing materials are not available, contact Thomcast to obtain replacement materials prior to shipping, they are provided at a nominal cost.

3. ***Pack equipment:*** Use original packing materials and directions provided. Most equipment is packed in a box within another box; this varies with each product. Double boxing provides maximum protection.

Caution: Do not pack equipment using "PEANUTS" as filler it does NOT provide sufficient protection during shipping. Rough handling by the carrier may cause permanent damage to the equipment. Thomcast cannot be held responsible for damaged equipment received due to improper packing.

[1] International calls must dial the country code before the phone number, i.e. 001-570-474-6751.
[2] If you do not obtain an RA number **prior** to returning equipment Thomcast cannot be held responsible for delays in repair and return time.

All information contained in this document is confidential and proprietary to THOMCAST and shall not be disclosed without the prior written permission of THOMCAST.

RETURN PACKAGING OF THE POWER AMPLIFER SEGMENT

1. Start with an empty power amplifier segment box, shown in Figure 1. If you don't have one please inform Comwave customer service when you contact them for a return authorization (RA) number, which you MUST do prior to returning ANY equipment.

2. Place the power amplifier segment into the box, as shown in Figure 2. The heatsink should always face up and the connectors on the rear of the power amp segment rest against the soft gray foam for protection.

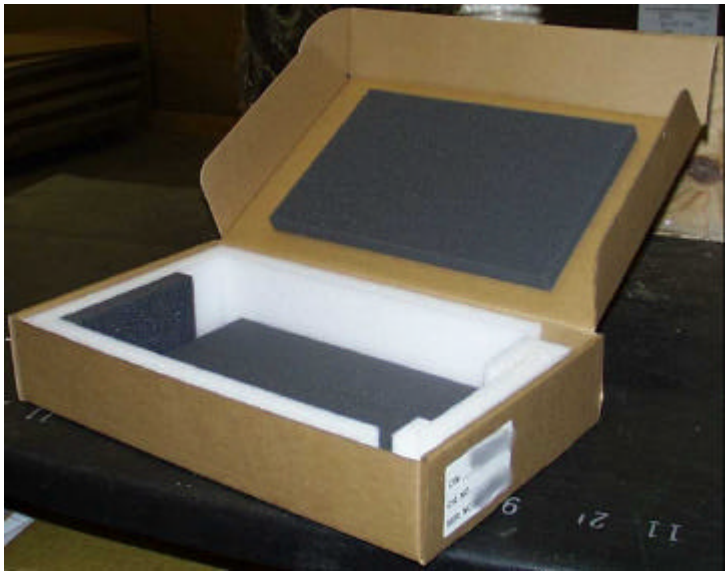

Figure 1: Empty power amplifier segment box.

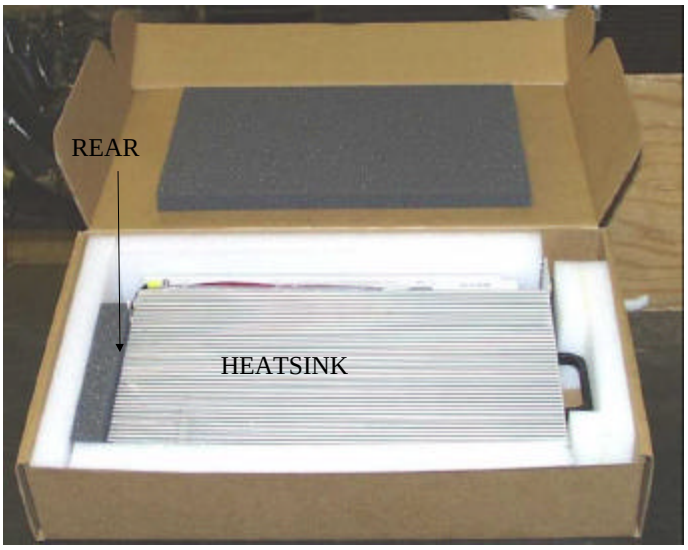

Figure 2: Boxed power amplifier segment.

3. Fold the edges of the inner box in and close.

4. Place the inner box into the 4-pack master (outer box), being sure to include three empty power amplifier boxes for a secure fit, as shown in Figure 3. The power amplifier segments are generally packed 4 per master box and shipped. When returning segment(s) please pack them the same way, ALL boxes will be returned to you. If you need to assemble a master box, use 2" clear box tape over the bottom seam, using three layers to assure strength. Then put 4 pieces of fiberglass strapping tape over the edges.

All information contained in this document is confidential and proprietary to THOMCAST and shall not be disclosed without the prior written permission of THOMCAST.

5. Close the 4-pack master box and seal the top seam with 2” clear box tape, using three layers to assure strength. Then put 4 pieces of fiberglass strapping tape over the edges. Clearly mark the RA number on the outside of the box before shipping.

Figure 3: Power amplifier segments ready to ship.

All information contained in this document is confidential and proprietary to THOMCAST and shall not be disclosed without the prior written permission of THOMCAST.