Digital Liquid Cooled UHF TV Equipment
5K2 DD, MEDIAFLO SIRIUS 12089

Descriptive and Functional Manual

☎ : 33 (1) 34.90.32.55
✉: hotline@thales-bm.com

Table of content

1. Generale description 7

1.1. Outline 7

1.2. Simplifier description of transmitter 9

1.2.1. Basic operation 9

1.2.2. Architecture 10

2. Detailed operational description 13

2.1. Introduction 13

2.2. Transmission function 14

2.2.1. Operational description of digital exciter 14

2.2.2. Exciter change-over 15

2.2.3. ASI input change-over 15

2.2.4. Amplification of the RF signal 16

2.3. Description of the overall transmitter control system 18

2.3.1. Introduction 18

2.3.2. Polling of events data 18

2.3.3. Polling of operator commands 21

2.3.4. Command control sytem 21

2.3.5. Processing of faults 24

2.3.6. Computing the overall quality assessment of the RF signal 28

2.3.7. Data transfer between exciter and CPU 29

2.4. User interface operation 30

2.4.1. Outline 30

2.4.2. Display control system 30

2.4.3. Power level bargraphs on PCL 33

2.4.4. Log book control system 34

2.4.5. On/Off commands and change-over override switch 34

3. Description / Test points / Location of units 35

3.1. System architecture and location of transmitter units 35

3.1.1. Location of transmitter units 37

3.2. Rack : SIRIUS DVB-T UHF 45321627.11 39

Information contained is this document is confidential, is THOMSON property and cannot be disclosed in whatever form without prior written authorization of THOMSON.

3.2.1. Introduction ... 39
3.2.2. Applications ... 40
3.2.3. SIRIUS Description ... 41
3.2.4. Encoding ... 45
3.2.5. Transport Stream Inputs ... 46
3.2.6. Adaptive non linear pre-correction ... 47
3.2.7. Adaptive linear correction ... 48
3.2.8. Alarm circuits ... 49
3.2.9. Frequency references ... 50
3.2.10. Interface of exciter ... 51
3.2.11. General characteristics ... 55

3.3. SIRIUS cooling assembly ... 56

3.3.1. Data sheet - Fans : 91835299 ... 56
3.3.2. Data sheet – Power Supply : 91851992 ... 58

3.4. Transmitter Management rack DD 45323663.02 ... 59

3.5. Interconnections Board EMB/UC TX Numerique 45324511 ... 61

3.5.1. Outline ... 61
3.5.2. Protection and surveillance devices ... 61
3.5.3. Indicator lamps and message displays ... 62
3.5.4. Controls ... 62
3.5.5. Power input ... 62
3.5.6. Connections and data transfer ... 63
3.5.7. Cooling ... 63
3.5.8. Transportability ... 64

3.6. Preamplifier RF Unit 45326079 ... 65

3.6.1. Presentation ... 65
3.6.2. Architecture ... 65
3.6.3. Operational description ... 66
3.6.4. Indicator lamps and message displays ... 66
3.6.5. Test points ... 66
3.6.6. Adjustment controls ... 67
3.6.7. Protection and surveillance devices ... 67
3.6.8. Power input ... 67
3.6.9. Connections ... 67
3.6.10. Cooling 67
3.6.11. Transportability ... 67
3.6.12. Environmental Conditions ... 68

Information contained is this document is confidential, is THOMSON property and cannot be disclosed in whatever form without prior written authorization of THOMSON.

3.6.13. Mechanical Characteristics 68
3.6.14. Electrical Characteristics 68

3.7. Central Processing Unit (CPU-TH860) 69

3.7.1. Outline 69
3.7.2. Architecture 69
3.7.3. Protection and surveillance devices 69
3.7.4. Indicator lamps and message displays 70
3.7.5. Controls 70
3.7.6. Power input 70
3.7.7. Connections and data transfer 71
3.7.8. Cooling 72

3.8. Power supply unit for UC/Multiplex/PCL 61390563 73

3.9. Control panel (PCL) 45333047 75

3.9.1. Architecture 75
3.9.2. Architecture and operational description 75
3.9.3. Indicator lamps and message displays 77
3.9.4. Adjustment controls 77
3.9.5. Test points 77
3.9.6. The display card 45324176 78

3.10. The power amplifier, 45323629 80

3.10.1. Outline 80
3.10.2. Architecture 80
3.10.3. Operational description 82
3.10.4. Indicator lamps and message displays 85
3.10.5. Test points 86
3.10.6. Adjustment controls 86
3.10.7. Protection and surveillance devices 86
3.10.8. Power input 88
3.10.9. Connections and data transfer 88
3.10.10. Cooling 88
3.10.11. Transportability 88
3.10.12. Environmental Conditions 89
3.10.13. Electrical Characteristics 89
3.10.14. Physical characteristics 89

3.11. Amplifier power supply, 37419700.02 90

3.11.1. Outline 90

3.12. The mains plate, 61391643 97

Information contained is this document is confidential, is THOMSON property and cannot be disclosed in whatever form without prior written authorization of THOMSON.

3.12.1. Outline 97
3.12.2. Indicator lamps and message displays 100
3.12.3. Test points and adjustment controls 100
3.12.4. Protection and surveillance devices 100
3.12.5. Connections and data transfer 100
3.12.6. Input power 101
3.12.7. Cooling 101

3.13. The multiplex card, 45324500 102

3.13.1. Outline 102
3.13.2. Architecture 102
3.13.3. Operational description 102
3.13.4. Indicator lamps and message displays 110
3.13.5. Protection and surveillance devices 110
3.13.6. Adjustment controls 110
3.13.7. Connections and data transfer 110
3.13.8. Power input 111
3.13.9. Cooling 111

3.14. Coupling system 112

3.14.1. Outline 112
3.14.2. Architecture 112
3.14.3. Operational description 112
3.14.4. Protection and surveillance devices 113
3.14.5. Adjustments 114
3.14.6. Connections and data transfer 114
3.14.7. Input power 114
3.14.8. Cooling 114

4. Operating modes and Control modes 115

4.1. SIRIUS initialisation 115

4.2. Transmitter operating modes 115

4.3. On-air mode 115

4.4. Different operational states of exciter 116

4.5. The two exciter changeover modes 116

4.6. Transmitter control modes 117

5. Internal and external connections 118

Information contained is this document is confidential, is THOMSON property and cannot be disclosed in whatever form without prior written authorization of THOMSON.

5.1. Transmitter inter-unit connections 118

5.1.1. Cabinet inter-unit connections 118

5.1.2. Connections between Central Processing Unit and user interfaces 119

5.1.3. Connections between cabinet and filter unit..... 119

5.2. Location of principal connectors 120

Information contained is this document is confidential, is THOMSON property and cannot be disclosed in whatever form without prior written authorization of THOMSON.

1. General description

1.1. Outline

The purpose of the transmitter is to broadcast a digital signal by modulating a carrier in the UHF and VHF bands.

The transmitters can operate with the ATSC , DVB-T or MEDIAFLO standards.

These transmitters belong to a new range of UHF or VHF units between 0.8 and 19 kW and have been designed using the modular construction concept.

Each individual transmitter is designed for specific values of power output and frequency, but is constructed from a set of modules which are all part of an overall system design.

This standardisation brings the following advantages, when several different transmitters from the same range are in use :

- maintenance personnel who have become experienced on a particular piece of equipment can easily deal with another transmitter type.
- there is a decrease in the stock of spare parts required because of the use of common building blocks.

Operating the transmitters is straightforward and completely automatic. The equipment, the monitoring systems and the transmission parameters are all automatically supervised by the system.

Operator control of monitoring and operation of the transmitter can take place from a user interface situated either at the transmitter or at a remote location.

The equipment has been designed for minimum down-time and maximum reliability. Faults in certain modules and the need for interventions from maintenance staff are minimised by the inherent redundancy of the modular architecture; this also reduces the need to interrupt transmissions.

The transmitter can have the SD (Simple Drive) configuration or the DD (Double Drive) configuration. By the use of redundant transmitter components, the Dual Drive Version provides increased operational reliability.

Information contained is this document is confidential, is THOMSON property and cannot be disclosed in whatever form without prior written authorization of THOMSON.

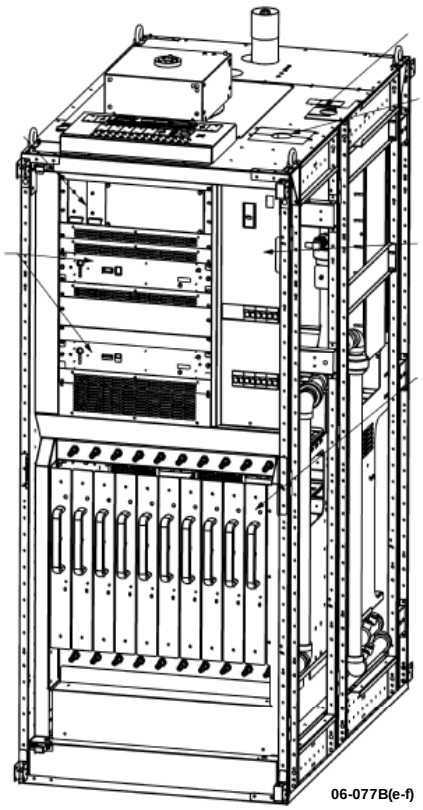

06-077B(e-f)

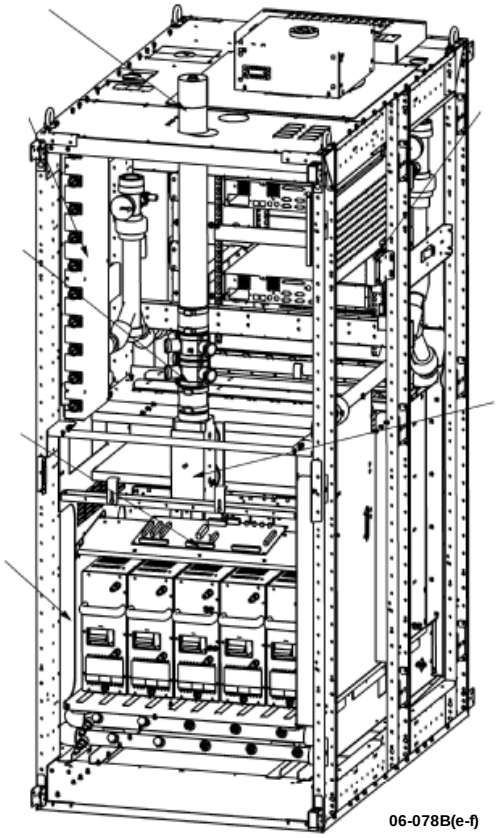

06-078B(e-f)

Information contained is this document is confidential, is THOMSON property and cannot be disclosed in whatever form without prior written authorization of THOMSON.

1.2. Simplifier description of transmitter

1.2.1. Basic operation

The MPEG-2 input signals are fed to the exciter inputs, they are converted into digital I and Q components and are then transposed into RF signals and pre-amplified.

The Dual Drive (DD) version of the transmitter contains two identical exciters, one of which can be switched to air if the other develops a fault; this on-air switch can be performed automatically or by the manual intervention of the operator.

The Single Drive (SD) transmitter has only one exciter.

The RF signal from the on-air exciter is fed to a RF amplifier channel.

A central control system monitors the operation of the various units, the operational commands, the transmitter configuration commands and the data exchange with the user interface.

The BRA/DASI function integrated into each digital exciter provides a fail-safe protection system for the ASI standard Transport Stream source. This functions provides also for bit rate matching at the input to the integrated DVB-T or MediaFLO encoder.

Information contained is this document is confidential, is THOMSON property and cannot be disclosed in whatever form without prior written authorization of THOMSON.

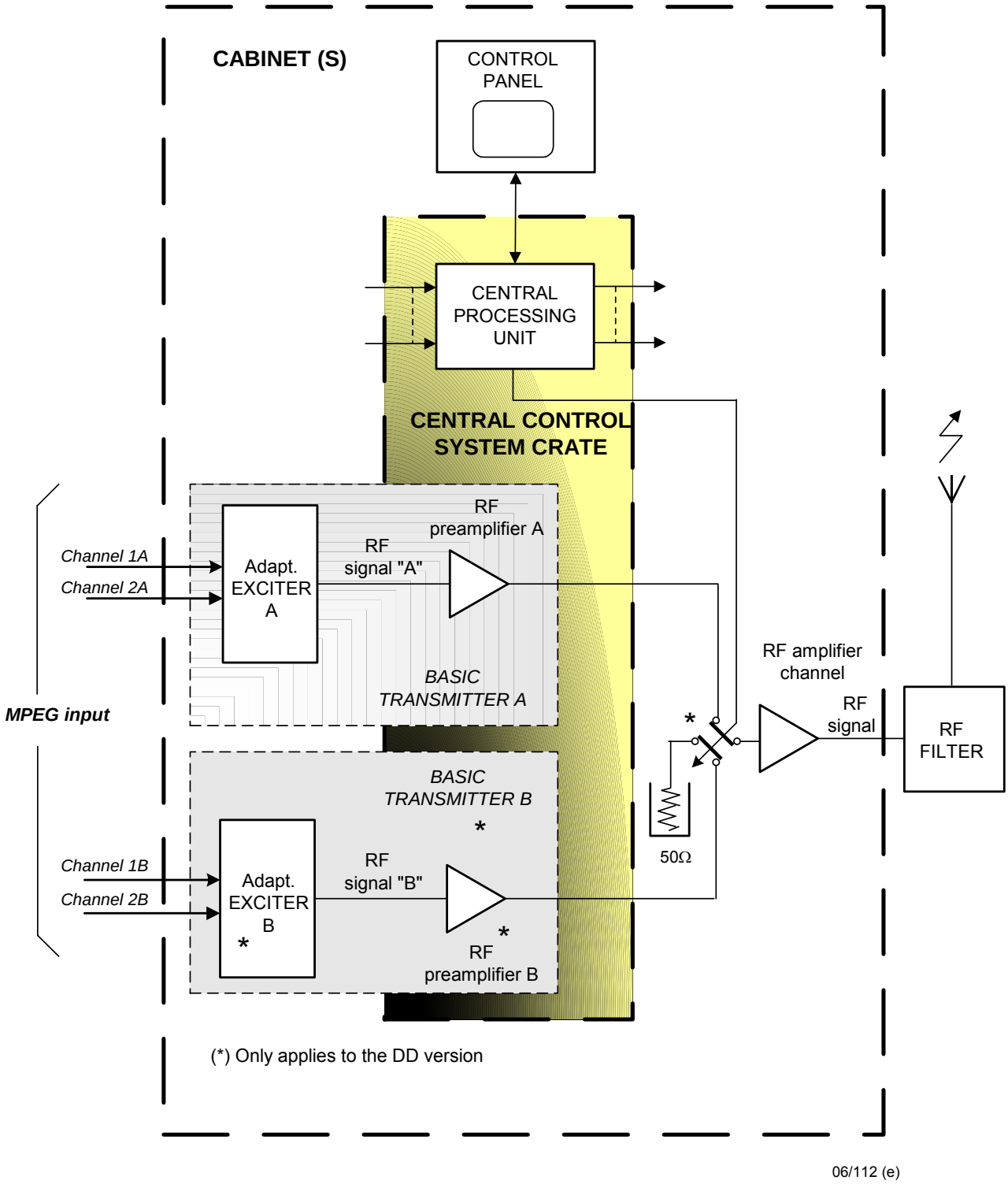

Figure 1 : Simplified transmitter block diagram

1.2.2. Architecture

The Dual Drive version of the transmitter consists of the following units:

- a unit containing two exciters in a redundant switchover system whereby a faulty exciter is replaced by the other. After digital processing, it transposes the input MPEG signals into a RF output.

Information contained is this document is confidential, is THOMSON property and cannot be disclosed in whatever form without prior written authorization of THOMSON.

Each digital exciter consists of:

- A SIRIUS rack with :

  A DVB-T (Europe) modulator board , ATSC (America) modulator board or MédiaFLO modulator board

  a processing signal board,

  an RF synthesiser,

  a preamplifier,

  a Very Low Voltage power supply,

- In the management rack, a RF amplifier (for DVB-T and ATSC modulator only)

- a coaxial relay and its 50 Ohms load so that one of the two digital exciters can be switched on RF amplifier channel.
- an RF amplifier way,
- a filter unit which filters the RF signal,
- a control system as follows:
  - A Central Processing Unit (CPU) which supervises the operation of the transmitter electronics units depending on operator commands and the status conditions in the units.
  - the very low voltage power supply for the CPU and the PCL,
  - an exciter/CPU interconnection card,
- a multiplex card which is the connection unit between the Central Processing Unit and the main transmitter electronic units,
- a Local Control Panel (PCL) which controls the data interchange between the operator and the transmitter,
- a Mains Distribution Panel which provides the mains feeds for the various transmitter power supplies,
- the power supplies for the RF amplifiers,
- the cooling system for the Exciter/CPU system.

The following associated external sub-systems for the SD/DD transmitters combine together to form a complete transmission operation:

- an external cooling system to cool the transmitter,
- an input three-phase mains supply,
- an external changeover system so that the transmitter can be switched between a dummy load and the antenna,
- A remote user interface (optional) with facilities for remote control of the transmitter.

Simple Drive transmitter

The Single Drive version is physically different from the Double Drive version in that it only has one digital exciter .

Information contained is this document is confidential, is THOMSON property and cannot be disclosed in whatever form without prior written authorization of THOMSON.

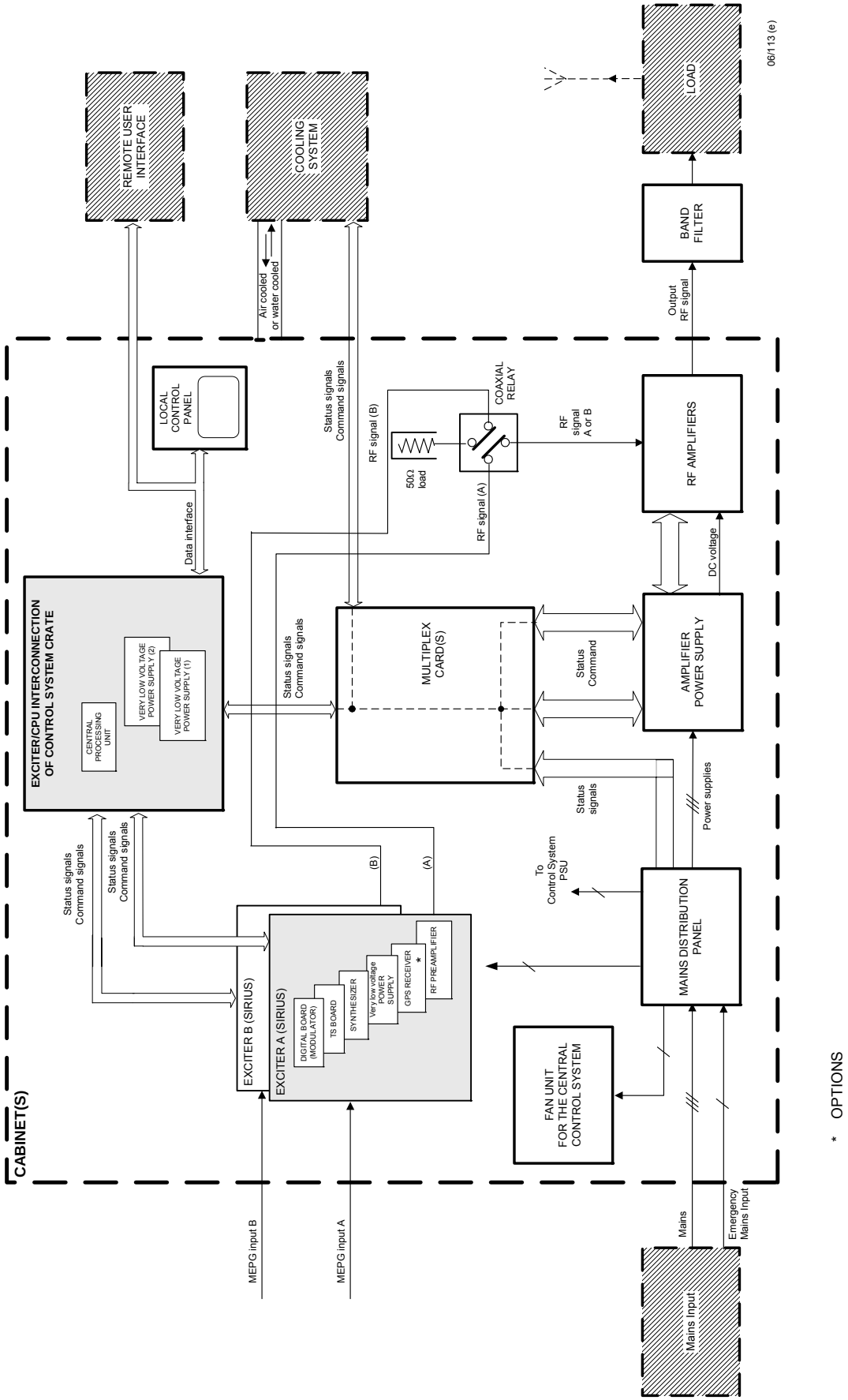

Figure 2 : Transmitter (Double drive) structure

Information contained is this document is confidential, is THOMSON property and cannot be disclosed in whatever form without prior written authorization of THOMSON.

2. Detailed operational description

2.1. Introduction

The main transmitter functions are as follows:

- transmission,
- control,
- mains distribution,
- Cooling.

Two individual sections have been devoted to the last two functions.

Information contained is this document is confidential, is THOMSON property and cannot be disclosed in whatever form without prior written authorization of THOMSON.

2.2. Transmission function

2.2.1. Operational description of digital exciter

The exciter (EMB) transposes the input base-band MPEG signal into an RF signal using a local frequency oscillator from a synthesiser.

The incoming data stream signal (MPEG2-TS) is processed by the **Channel Modulator (TS card)**, depending on the standard (DVB-T or ATSC), which provides an output complex digital signal in the form of two parallel I and Q digital signals and a clock reference.

These I & Q signals are then processed by the **DAP** (Digital adaptative pre-correction):

- Optional Clipping,
- Optional Adaptive Linear Equalisation (ALE),
- Adaptive non-linear correction.

With the digital filter option, as long as the magnitude of the vector is less than a given threshold, the vector remains unchanged. For magnitudes higher than the threshold, the vector is replaced by the specific complex value of the threshold. The process does not influence the phase.

The linearity correction ALE, as well as the non linearity correction (LUT) are based on the following process: comparing the demodulated I & Q output signals with the I & Q input signals, computing the transfer curve, inverting this transfer curve, loading new coefficients from LUT (for non linearity signal correction) and for ALE (linearity signal correction). The DAP output provides two parallel pre-corrected I & Q digital signals.

In the **TX card**, these digital signals are then converted into the analogue domain and directly transposed on a low-level RF signal. This unit also receives a sample of the output RF signal, which is demodulated and split into two components, I & Q. These complex components are then digitised and forwarded to DAP where they are compared with the input complex components. The TX card performs an Automatic Level Control thanks to a detected envelope voltage from the power amplifier channel of the transmitter.

Information contained is this document is confidential, is THOMSON property and cannot be disclosed in whatever form without prior written authorization of THOMSON.

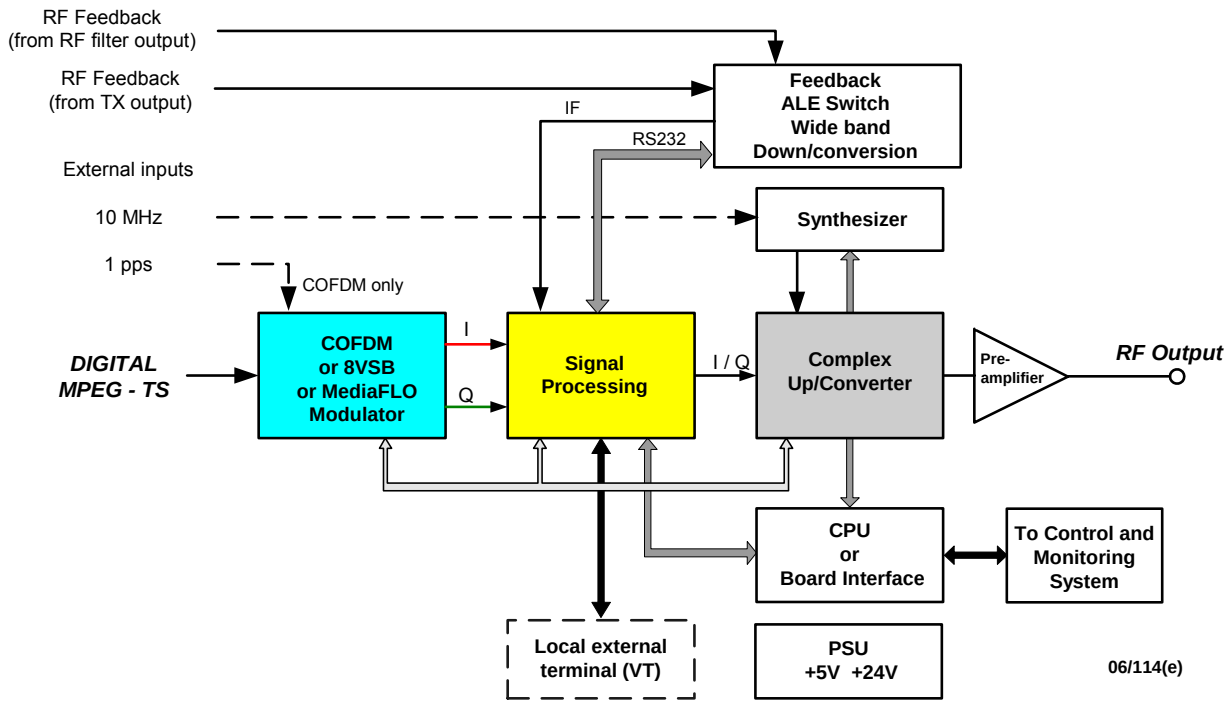

A **Preamplifier** allows a peak output power of + 40 dBm.

An internal **RF Synthesizer**, with different options, feeds the TX card for the RF up and down conversions.

The **Internal Control and Monitoring** is achieved by a serial link, **SPI bus,** managed by the principal digital card. In this way It is the Communication Interface node between all the digital cards of the SIRIUS. The principal digital card is also the SIRIUS interface with the external environment: Transmitter C/M or external terminal (VT, PC...). This external communication is achieved using **RS 232 interfaces**: (Ethernet or CAN Bus in factory) one for the transmitter interface, one for a external terminal which can be plugged directly in the front face of the DAP unit.

Use of a redundant transport stream is ensured by the optional «BRA/DASI» function designed to select one of *2 ASI inputs*. It also integrates a Bit Rate Adapter *(BRA)* designed to adapt the bit rate fed to the modulator, by means of the synchronisation clock called «Synchro IN».

2.2.2. Exciter change-over

In the Double Drive version, coaxial relay routes the RF signal from the exciter selected by the control system to the amplifier channels. This switcher is controlled by the "command control system" in the Central Processing Unit, which also takes into account both the operator commands and any fault signals sent from the selected exciter.

2.2.3. ASI input change-over

The switching of the way 1 towards the way 2 and conversely is always possible whatever is the state of the stream ASI on 2 ways. The switching of a way on the other one is left with the choice of the digital processor of the card (modulator). The processor has to ask about alarms of the other way before commuting. The switching seamless is not guaranteed.

Information contained is this document is confidential, is THOMSON property and cannot be disclosed in whatever form without prior written authorization of THOMSON.

2.2.4. Amplification of the RF signal

The output RF signals from the exciters are low power signals. This signal is sent to the inputs of the amplifiers, which are mounted in trays and are all connected in parallel.

The following shows the number of amplifier modules as a function of the transmitter power.

RMS POWER (BEFORE FILTER)	NUMBER OF RF AMPLIFIERS
3,1 kW	6 amplifiers
5,2 kW	10 amplifiers
6,3 kW	12 amplifiers

Each RF output from the amplifier modules is fed to a type F.I.C.S. (Full Isolated Coupling System) combiner which guarantees a mutual isolation of the order of 26 dB. This coupling system allows an on-air amplifier module to be removed without shutting down the transmission. Thus a faulty output amplifier can be replaced by a spare amplifier.

The amplifier modules are powered by 10 kW plug-in power supplies with very high reliability, which provide 250 A at 28 V (voltage programmable on 3 bits from 24 to 31 V), (one power supply for two amplifiers).

The use of several power supplies and amplifiers in the RF amplifier channel leads to a minimum degradation of power performance parameters when any of these units become faulty.

EXAMPLE FOR DVB-T TRANSMITTER			NUMBER OF FAULTY UNITS				
TRANSMITTER POWER	UNIT	TOTAL NUMBER	1	2	3	4	5
3.2kW	Amplifier	8	-1.16 dB	-2.5 dB	-4.08 dB	-6 dB	-8.52 dB
	Power supply	4	-2.5 dB	-6 dB	-12 dB		
5kW	Amplifier	12	-0.76 dB	-1.6 dB	-2.5 dB	-3.5 dB	-4.7 dB
	Power supply	6	-1.6 dB	-3.5 dB	-6 dB	-9.5 dB	-15.5 dB
6.5kW	Amplifier	16	-0.64 dB	-1.16 dB	-1.8 dB	-2.5 dB	-3.25 dB
	Power supply	8	-1.16 dB	-2.5 dB	-4.08 dB	-6 dB	-8.52 dB

AGC acting on the power level compensates for loss of gain in the amplifiers.

An Automatic Gain Control (AGC) loop is used to regulate the power output. Each amplifier provides an AGC voltage (detected voltage) which is fed to an analogue "OR" gate on the transmitter multiplex board. These data are sent to the TX board of the exciter, on which there is an RF gain control in the form of an attenuator which controls the output power.

The "OR" gate ensures that the exciter output power signal is controlled by the largest of the AGC voltages from the amplifiers. Consequently the RF power amplifier which is delivering the largest power level is taken as the reference for the AGC loop. This means that all amplifiers are equally driven irrespective of failures in one or more of them; this also ensures a constant linearity for the amplifier channel.

Information contained is this document is confidential, is THOMSON property and cannot be disclosed in whatever form without prior written authorization of THOMSON.

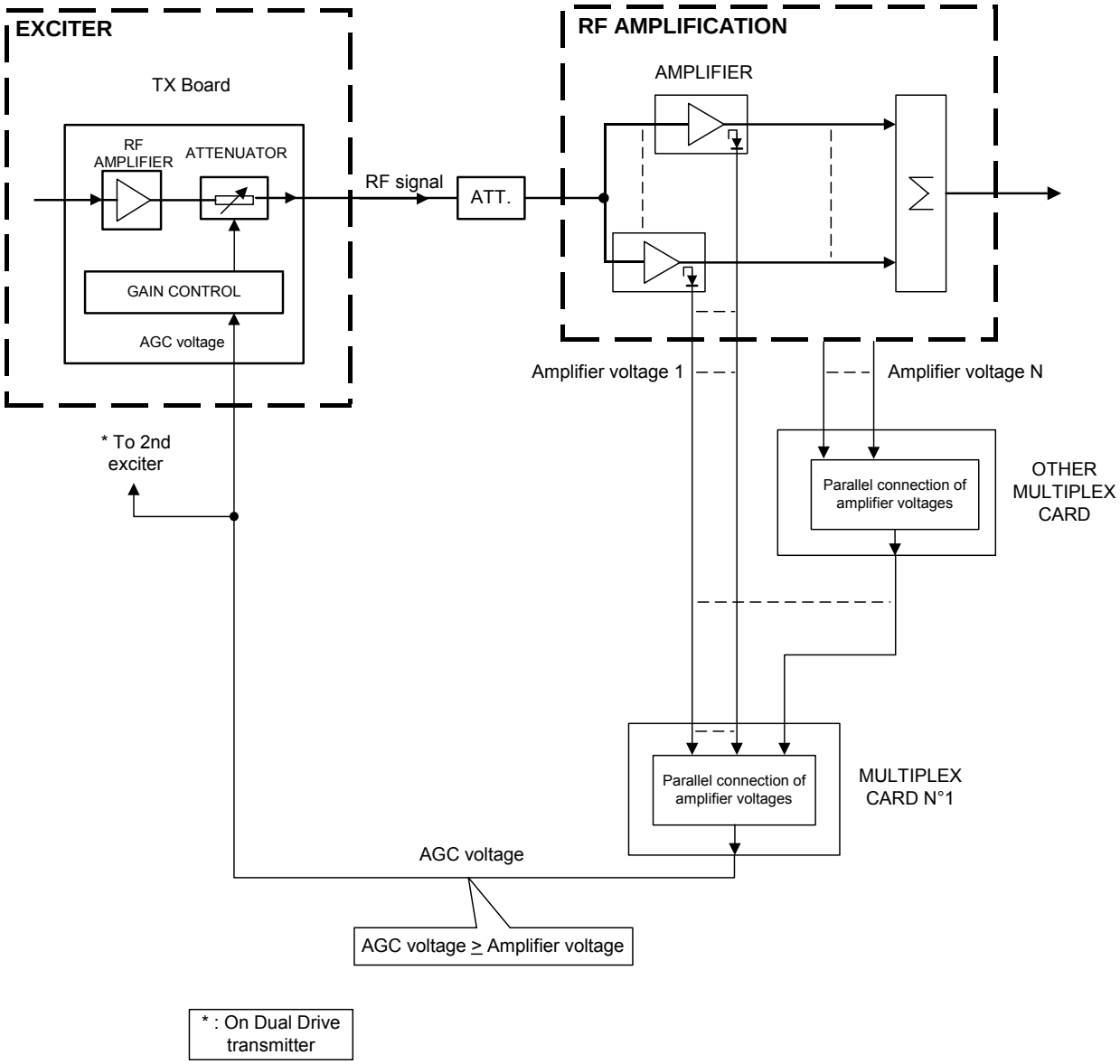

Figure 3 : AGC operational block diagram

Information contained is this document is confidential, is THOMSON property and cannot be disclosed in whatever form without prior written authorization of THOMSON.

2.3. Description of the overall transmitter control system

2.3.1. Introduction

The overall control system for the various transmitter units is supervised by the Central Processing Unit (CPU). This control system takes the following into account:

- polling of the events data from the various transmitter units,
- polling of the operator commands,
- command control system,
- Elaboration of the global quality note
- processing of faults,
- data transfer between exciter and CPU.
- user interface data from:
  - display control system,
  - the logbook control system.

2.3.2. Polling of events data

This processing unit continuously polls the transmitted signal parameter characteristics and the status condition data from the main transmitter units as follows:

- RF amplifiers,
- Amplifier power supplies,
- synthesiser,
- exciter(s)
- Multiplex card.

In addition, sensors or probes detect and transmit data on the following:

- liquid parameter values and associated cooling system,
- Mains input supply system,
- RF output signal (forward wave and return wave).

Every new event is detected and associated data are sent to the following systems:

- processing of faults,
- display control system,
- Log book control system.

Information contained is this document is confidential, is THOMSON property and cannot be disclosed in whatever form without prior written authorization of THOMSON.

Delays and time lags in equipment

The back-up functions are totally hardware based; the CPU board stores data according to the type of event and provides a fault display system.

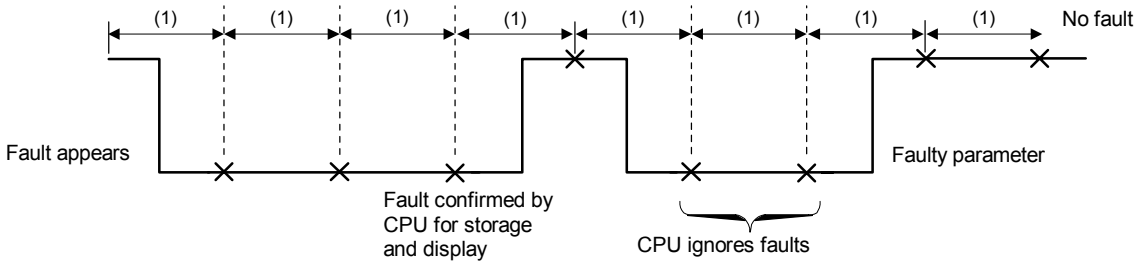

(1) : Parameter polling period (approx. 300 ms)

X : Parameter polling by CPU

The CPU confirms a parameter fault in the transmitter (not in the exciter) after it has been detected during three successive polling periods.

Three to four seconds after its appearance a fault will be displayed and stored in the logbook.

After a start command from the CPU a delay of 20 seconds (CPU software) is applied to the detection of transmitter RF faults.

After a start command from the CPU a delay of 5 seconds (multiplex board hardware) is applied to the detection of faults relating to cooling air/water pressure and flow rate.

Information contained is this document is confidential, is THOMSON property and cannot be disclosed in whatever form without prior written authorization of THOMSON.

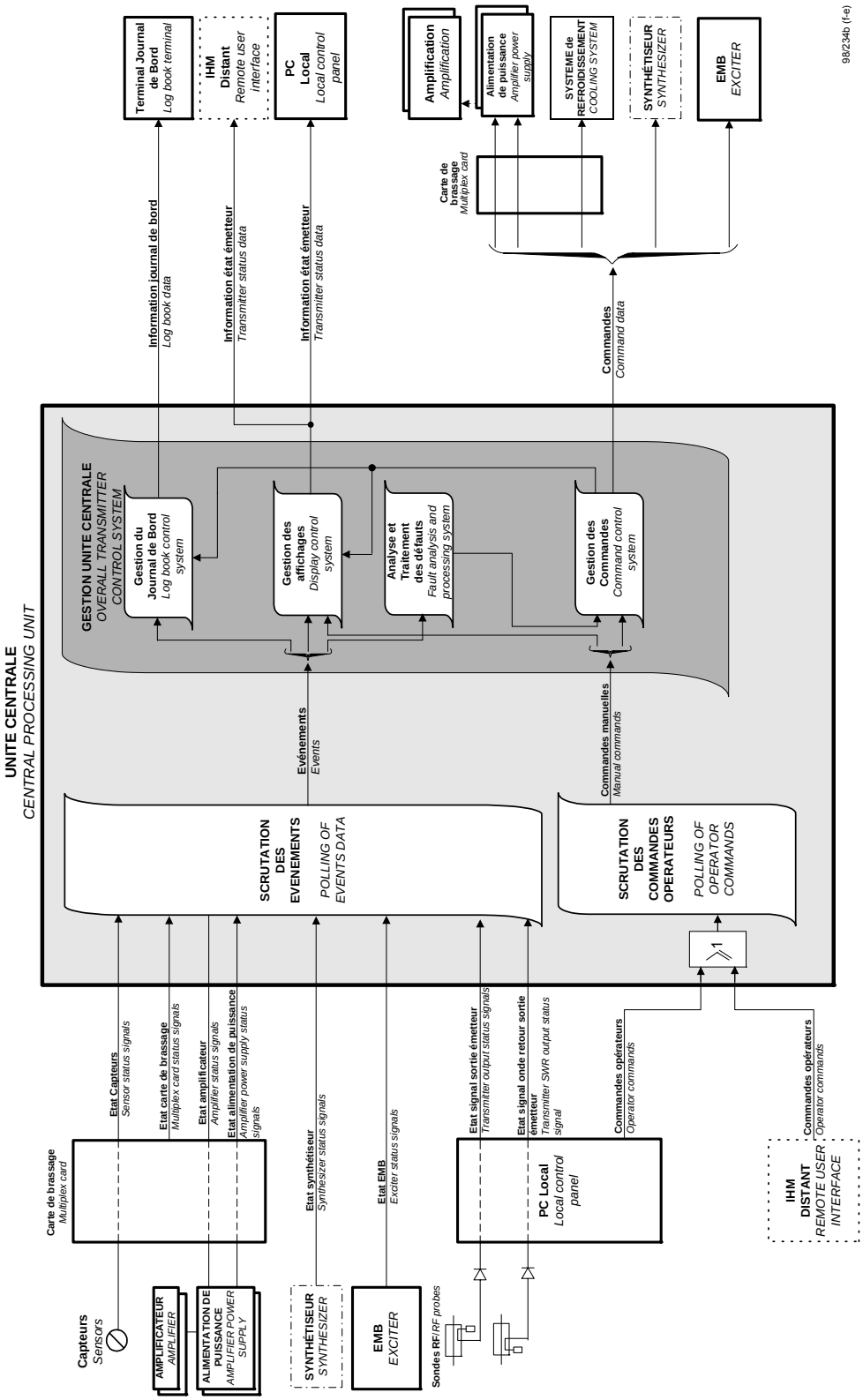

Figure 4 – Block diagram of the control system and events signals

Information contained is this document is confidential, is THOMSON property and cannot be disclosed in whatever form without prior written authorization of THOMSON.

2.3.3. Polling of operator commands

The Central Processing Unit (CPU) receives the operator commands sent from the Local Control Panel (PCL) or a remote user interface. These commands are taken into account by the following systems:

- PCL windows and indicator lamp control system,
- Command control system.

2.3.4. Command control sytem

This processing unit continuously polls the transmitted signal parameter characteristics and the status condition data from the main transmitter units as follows:

- RF amplifiers,
- Amplifier power supplies,
- synthesiser,
- exciter(s)
- Multiplex card.

In addition, sensors or probes detect and transmit data on the following:

- liquid parameter values and associated cooling system,
- Mains input supply system,
- RF output signal (forward wave and return wave).

Every new event is detected and associated data are sent to the following systems:

- processing of faults,
- display control system,
- Log book control system.

Delays and time lags in equipment

The back-up functions are totally hardware based; the CPU board stores data according to the type of event and provides a fault display system.

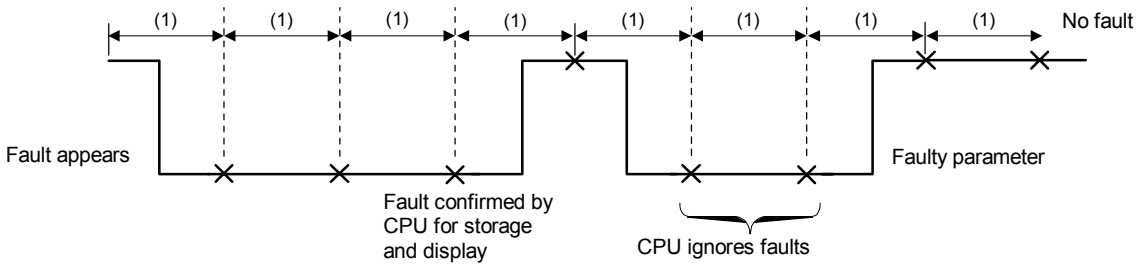

(1) : Parameter polling period (approx. 300 ms)

X : Parameter polling by CPU

The CPU confirms a parameter fault in the transmitter (not in the exciter) after it has been detected during three successive polling periods.

Three to four seconds after its appearance a fault will be displayed and stored in the logbook.

Information contained is this document is confidential, is THOMSON property and cannot be disclosed in whatever form without prior written authorization of THOMSON.

After a start command from the CPU a delay of 20 seconds (CPU software) is applied to the detection of transmitter RF faults.

After a start command from the CPU a delay of 5 seconds (multiplex board hardware) is applied to the detection of faults relating to cooling air/water pressure and flow rate.

Information contained is this document is confidential, is THOMSON property and cannot be disclosed in whatever form without prior written authorization of THOMSON.

Information contained is this document is confidential, is THOMSON property and cannot be disclosed in whatever form without prior written authorization of THOMSON.

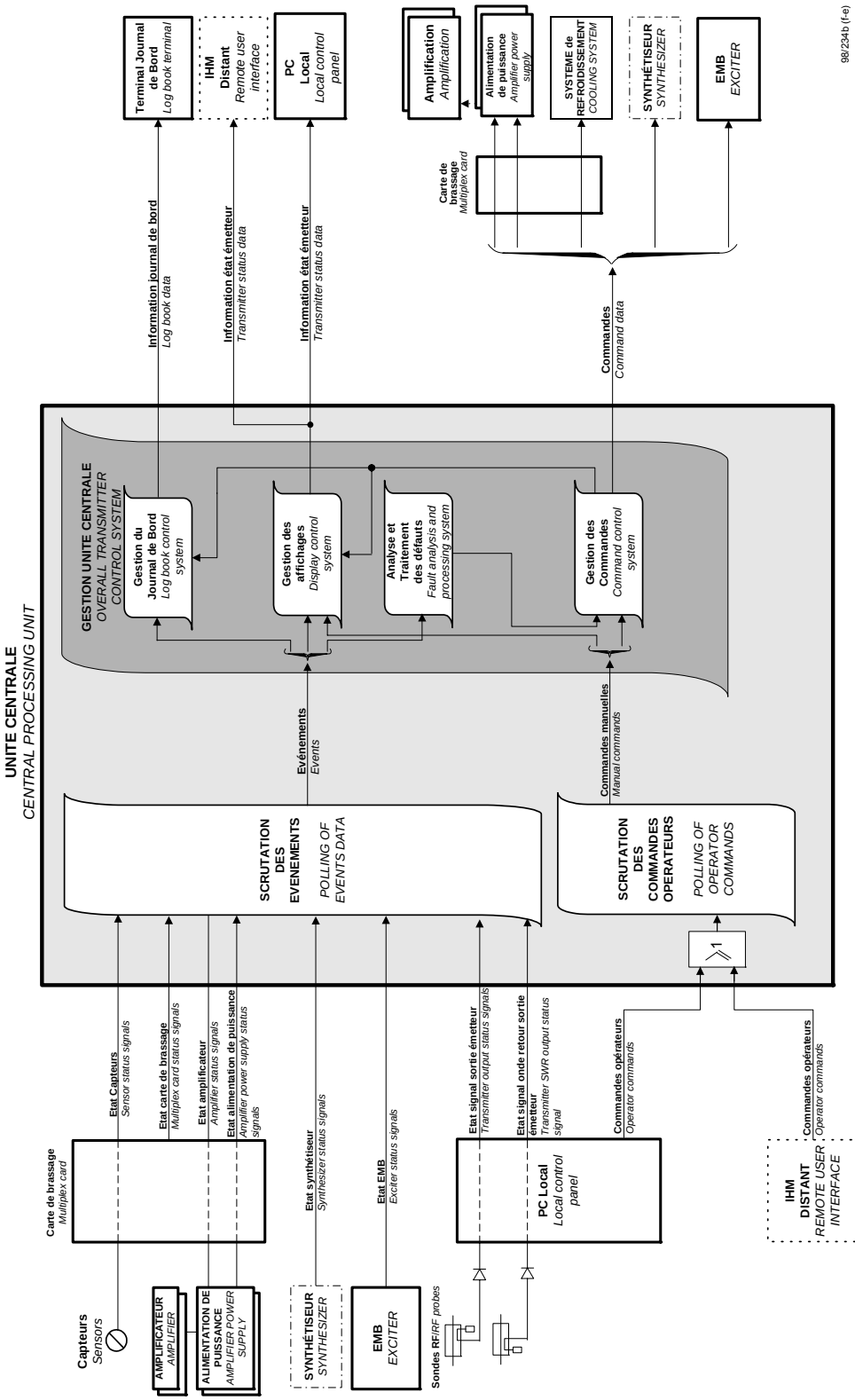

Figure 5 – Block diagram of the control system and events signals

2.3.5. Processing of faults

2.3.5.1. Outline

Faults are detected by sensors (liquid flow/air pressure, temperature and reflectometer probes) and surveillance devices inside the units (power supplies, SWR protection, ...).

Fault signals from these sensors are picked up:

- either by a loop protection system in the multiplex card,
- or by the fault processing system in the Central Processing Unit.

All faults without exception are also picked up by the following systems in the CPU:

- log book control system,
- display control system.

2.3.5.2. Fault analysis system

All fault signals received by the Central Processing Unit are analysed before being processed. This analysis consists in checking that some other event is not responsible for the fault signal; some events (transient phase anomalies, fault in multiplex card, amplifiers missing, ...) can cause anomalies on other units.

Example:	When a multiplex card fault appears, the status data, which should pass through the card, will not be picked up by the system. When this happens some faults will not be processed.

Notes:	Although to a certain extent the various units are protected by the system the following units have their own automatic protection systems: ♦ amplifier power supply, ♦ amplifiers, ♦ exciter system.

2.3.5.3. Fault processing facilities

The fault processing system generates commands, which protect the transmitter operation from the fault signals, which occur. It reacts to the following events:

- air pressure/input liquid temperature fault,
- SWR/amplifier overdrive fault,
- SWR antenna fault,
- Automatic exciter changeover (only applies to the dual drive version),
- Automatic transmitter on-air/off-air switch,
- Re-setting of synthesiser.

Information contained is this document is confidential, is THOMSON property and cannot be disclosed in whatever form without prior written authorization of THOMSON.

Information contained is this document is confidential, is THOMSON property and cannot be disclosed in whatever form without prior written authorization of THOMSON.

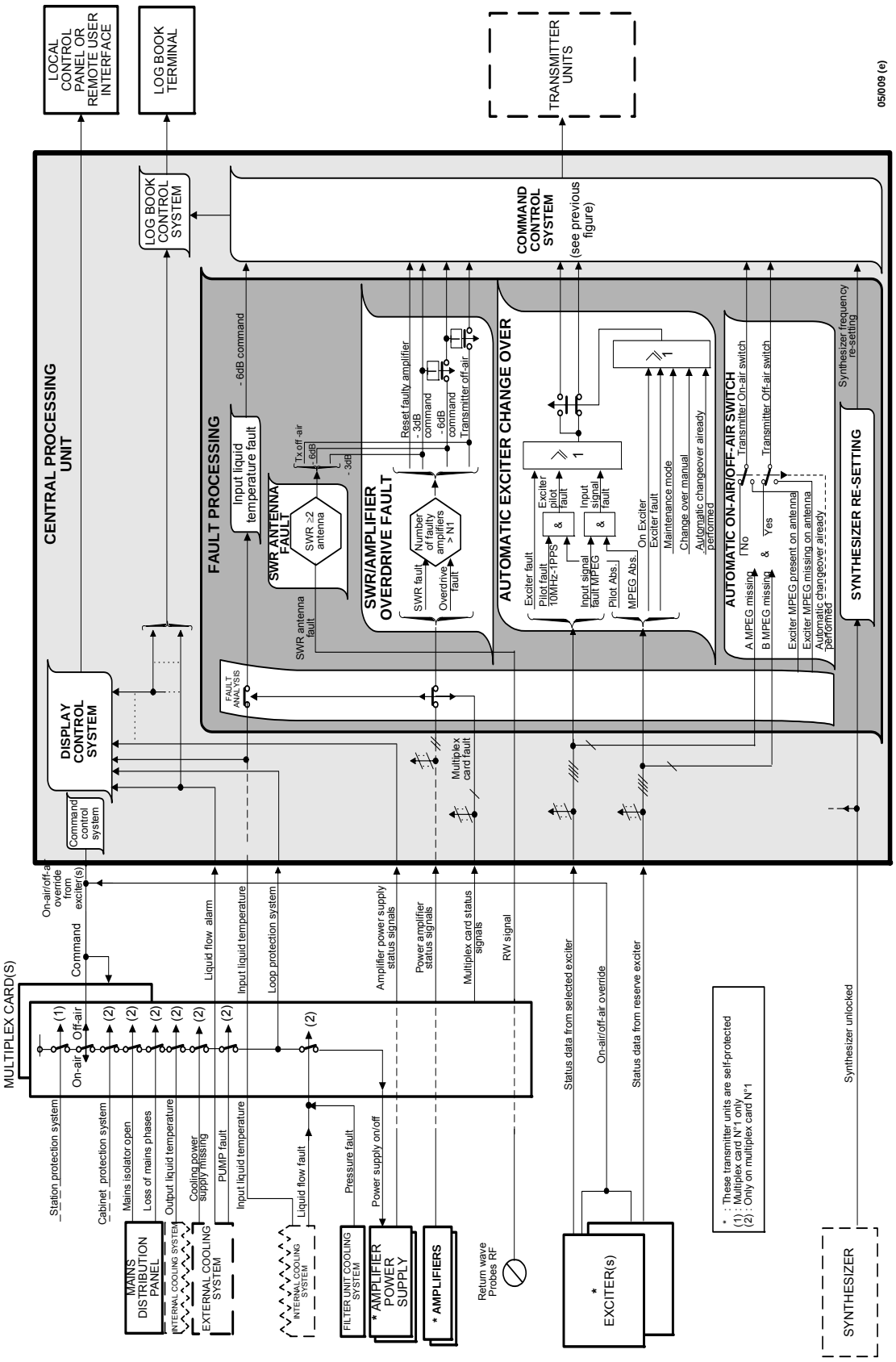

Figure 6 : Fault processing

Input liquid temperature fault

An "input liquid temperature" fault signal from the sensor in the internal cooling system sends a command to lower the transmitter power by 6 dB.

SWR or amplifier overdrive fault

When the number of faulty amplifiers (SWR or overdrive fault) in the amplifier channel is greater than a particular number (which depends on the total number of amplifiers), the fault processing system triggers the following sequence of operations:

- re-initialisation of the faulty amplifiers,
- if the fault persists:
  - reduction of transmitter power by 3 dB,
  - re-initialisation of faulty amplifiers.
- if the fault persists:
  - reduction of transmitter power by 6 dB,
  - re-initialisation of faulty amplifiers,
- if the fault persists: shutdown of transmitter

SWR antenna fault

When the return wave antenna is higher or equal at 2, the fault processing system triggers the following sequence of operations:

- reduction of transmitter power by 3dB.
- if the fault persists: reduction of transmitter power by 6 dB
- if the fault persists: shutdown of transmitter.

Automatic exciter changeover (only applies to the dual drive version)

The fault processing system sends a changeover to reserve exciter command signal to the command control system when one of the following fault signals is received and when the reserve exciter is switched off and fault-free:

- Exciter fault :
  - Communication link failure with the Sirius,
  - Power supply of exciter fault,
  - RF output signal missing from Sirius (Sirius rack is ON with an modulator not mute).
  - Modulator fault,
  - Sirius fault,
  - RF preamplifier fault,
  - Signal missing of the 10 MHz external (external GPS configuration only),
  - Board fault (synthetizer or TS board or Tx board or GPS board (internal GPS configuration only) or EXT INPUT board (if installed card).
- Pilot fault :
  - Signal missing of the 10 MHz external when the synthesizer 10 MHz is configured in external.
  - 1 PPS signal missing when MUTE function is selected for this signal (in mode SFN only).
- Absence or input MPEG-2 signal faulty when the modulator is not configured in PRBS (this configuration is not possible in SFN mode).

Information contained is this document is confidential, is THOMSON property and cannot be disclosed in whatever form without prior written authorization of THOMSON.

However this changeover command is not confirmed if the Reserve exciter is currently on-air or one of the following faults signals is received from the Reserve exciter:

- reserve exciter fault,
- no MPEG-2 signal at input.

Automatic transmitter on-air/off-air switch (auto start)

As soon as the fault processing system detects that there is neither an MPEG-2 signal at the input of the on-air exciter nor at the input of the reserve exciter it automatically switches the transmitter off-air.

As soon as the fault processing system detects that there is an MPEG-2 signal at the input of the on-air exciter or/and at the input of the reserve exciter it automatically switches the transmitter to air.

If an automatic changeover has taken place and the transmitter has not been re-initialised, the system only takes note of whether or not there is a signal at the input of the exciter connected to the antenna.

Re-setting of synthesiser

If it is detected that the synthesiser is unlocked the "fault processing system" sends a command for its re-setting which includes the frequency value.

Notes: When a multiplex card fault appears, the status data, which should pass through the card, will not be picked up by the system. When this happens some faults will not be processed.

Although to a certain extent the various units are protected by the system the following units have their own automatic protection systems:

- amplifier power supply,
- amplifiers,
- exciter system.

2.3.5.4. Protection system

There are some surveillance devices which force the transmitter to be shut down when they detect faults. All the surveillance devices are connected together in a continuous loop system. As soon as a fault appears, the loop protection system forces a transmitter off-air switch by switching off the amplifier power supplies.

The protection system remains in operation when the Central Processing Unit is not in circuit. Thus the transmitter is protected even when the control system is faulty.

The following are the elements of the loop protection system :

- station protection system,
- cabinet protection system,
- data on the status condition of the mains isolator in the mains distribution panel,
- status data on the mains input system (phase inversion and unbalanced phase conditions),
- surveillance device which monitors the temperature of the output liquid from the internal cabinet cooling system,
- surveillance device which monitors the cooling system motor and the presence of mains on the motor,
- surveillance device which monitors the liquid flow from the internal cabinet.

The protection system is switched on or off by the on/off command from the Central Processing Unit or by the on-air/off-air overrides command from the On-Air exciter if the Central Processing Unit is not operational.

Information contained is this document is confidential, is THOMSON property and cannot be disclosed in whatever form without prior written authorization of THOMSON.

In a transmitter configuration containing several cabinets, each cabinet has its own protection system controlled by the multiplex card. The two loop protection systems are connected together so that open circuiting the first either one will cause the shutdown of the cabinet. The protection systems are identical on both cards with the exception of the station protection.

In the case of a 3.75 or 5 kW transmitter in which the second multiplex card is in the same cabinet, the loop protection system on the second card does not accept the surveillance signals; it is simulated by a hardwired closed loop.

2.3.6. Computing the overall quality assessment of the RF signal

The quality of the RF output signal of a digital transmitter is assessed by a number between 1 and 20, called overall quality assessment (**QN**).

This overall quality assessment is indicated in a window of the PCL and also on the remote control position.

This assessment is processed by the transmitter CPU and a "fault" signal is sent on a hard wired connection. This fault loop, along with the overall quality assessment, is used in PR or N+1 transmitter systems for automatic transmitter changeover.

For a transmitter, the overall quality assessment (QN) is obtained by computing the cubic root of the quality assessments for the following parameters:

- Shoulder level of the RF signal,
- Ripple level of the RF signal,
- RF output power of the transmitter.

For a given parameter, the quality assessment is computed from:

- The *Correction threshold* of the parameter (**CS**: **C**orrection threshold for **S**houlder, **CR**: **C**orrection threshold for **R**ipple, **PN**: Nominal Power), beyond which the MODAP performs a correction,
- The actual parameter value (*as measured*),
- The *Quality threshold* of the parameter (**S**: quality threshold for **S**houlder, **R**: quality threshold for **R**ipple, **P**: quality threshold for **P**ower), beyond which the transmitted signal quality is considered to be bad. When this threshold is exceeded for a parameter, the quality assessment for that parameter equals «5».

The quality assessments for the parameters are computed as follows:

- **Quality assessment for Shoulder : NS** = 20 – ((**Measured value** of parameter – **CS**)* 15 / **S**)
- **Quality assessment for Ripple : NR** = 20 – ((**Measured value** of parameter – **CR**)* 15 / **R**)
- **Quality assessment for Power : NP** = 20 – ((**Measured value** of parameter – **PN**)* 15 / **P**)

These equations provide the following results:

- A quality assessment of **5** when the difference between the **Measured value** and the **Correction threshold** of the parameter equals the **Quality threshold** of the parameter.
- A quality assessment of **20** when the **Measured value** of the parameter is higher than or equal to the **Correction threshold**.

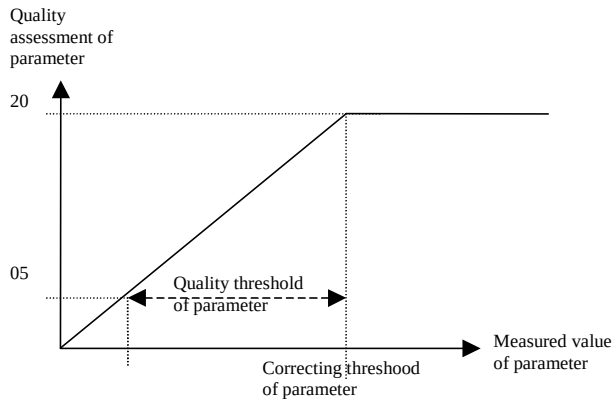

When the quality assessment for one parameter is 5 while the other two assessments are 20, the cubic root is 13. Such overall transmitter quality assessment is considered a major fault.

Information contained is this document is confidential, is THOMSON property and cannot be disclosed in whatever form without prior written authorization of THOMSON.

2.3.7. Data transfer between exciter and CPU

Basically the relationship between the Digital EMB and the UC Transmitter system can be categorised as following:

- exchanges related to the basic working conditions: starting, restarting, stopping, safety ...
- exchanges related to the configuration of the Digital Exciter: modulator configuration (modes of modulation, by pass of functions ...), DAP (modes of correction : On/Off, frozen, adaptive, ALE On/Off and Adaptive/Fixed, Clipping On/Off and threshold ...)
- information wished by the customer: status of the digital Exciter (modes of modulation and correction...), version, frequency and level of correction ...
- exchanges of files for backup and loading.

Information contained is this document is confidential, is THOMSON property and cannot be disclosed in whatever form without prior written authorization of THOMSON.

2.4. User interface operation

2.4.1. Outline

The operator can operate the transmitter from two locations:

- locally by using:
  - a local control panel (PCL) which is positioned in the front panel of the main cabinet and consists of:
    - a screen in which various windows with transmitter commands and operational data are displayed,
    - indicator lamps which show operational status conditions,
    - an LED system for showing the RF power level.

Note :	Commands from the PCL can be locked (disabled) by using a password,

  - an override switch (on/off) which is situated on the EXCITER/CPU interconnection mother board.
- a remote location using a user interface which can be:
  - a screen terminal connected via a serial link to the CPU card and which can display windows on its screen which can be the same as or different from those on the PCL,
  - a terminal consisting of status indicators for transmitter operation and commands which is hard wired to the CPU card.

  This user interface is positioned a few metres away from the transmitter (it can be about ten metres away in the case of a serial link while it can be up to about 100 metres away in the case of a hardwired connection).

A terminal can be connected to the Central Processing Unit and this provides facilities for examining the transmitter log book.

2.4.2. Display control system

2.4.2.1. Outline

The "Display control system" controls:

- the display of data and messages on the windows of the PCL and of the remote user interface (in the case of a serial link),
- the operation of the indicator lamps on the Local Control Panel (PCL),
- the status signals to the remote user interface (in the case of a hardwired connection).

The display control system receives all new status data and operator command data from the following system operations: "polling of events", "polling of operator commands" and "command control system".

The command control system receives manual commands from:

- the PCL, when the system is in local control and when the screen is unlocked, i.e. enabled by using a password,
- the remote user interface when the system is in remote control mode.

Information contained is this document is confidential, is THOMSON property and cannot be disclosed in whatever form without prior written authorization of THOMSON.

2.4.2.2. Window control system

The window control system effects a real time update on the data base which contains the data to be displayed in the various windows of the PCL or the remote user interface.

The updated data are sent to the PCL and to the remote user interface. Hence the database is duplicated in the following sub units:

- Central processing unit,
- PCL,
- Remote user interface.

When the operator calls up a window to the PCL screen, the request is simultaneously sent to the PCL database and to the CPU display system. The window together with its contents is then sent to the PCL screen:

- either via the PCL data base if the windows are type A windows (“CONTROL”, “EXCITER”, “INTLOCK”, “PSUPPLY”, ...). Type A windows do not contain any specific data linked to the transmitter configuration.
- or, the data base attached to the display control system in the Central Processing Unit, if the windows are type B windows ("AMPLI", "CONTROL OPER", "CONTROL MAINT",...). Type B windows contain specific data linked to the transmitter configuration.

The remote user interface data from the data base can be used independently of the window call up requests from the PCL (in the case of a serial link).

Control system for the hardwired connections

The processing of the hardwired commands and data system is supervised by the display control system and deals mainly with events data from the "polling of events data" system.

Information contained is this document is confidential, is THOMSON property and cannot be disclosed in whatever form without prior written authorization of THOMSON.

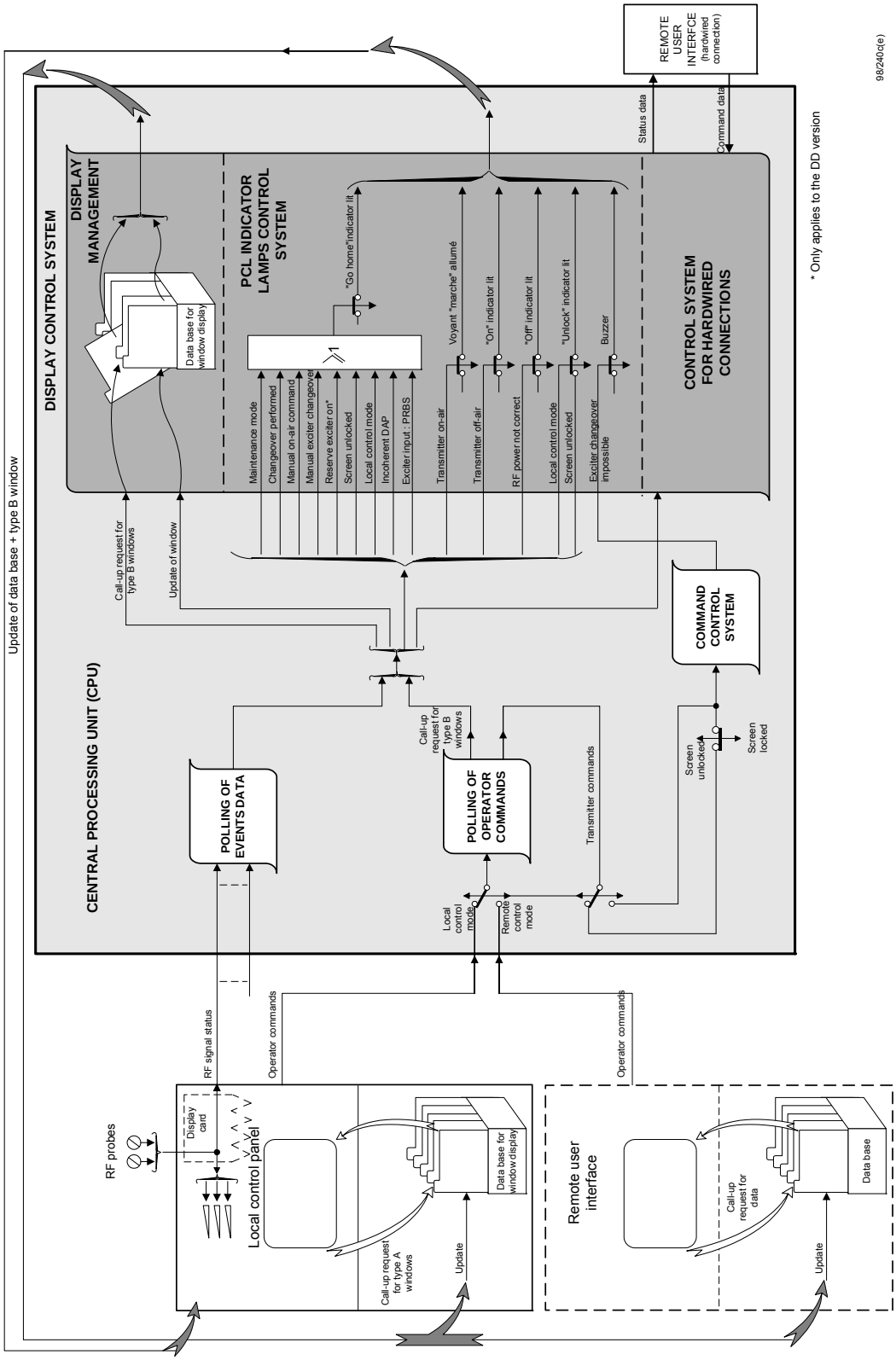

Figure 7 : Block diagram of PCL windows and indicator lamps control system

Information contained is this document is confidential, is THOMSON property and cannot be disclosed in whatever form without prior written authorization of THOMSON.

2.4.3. Power level bargraphs on PCL

The processing of the command signals which activate the PCL indicator lamps is mainly derived from data from the "polling of events" system.

"Go home" indicator lamp

The "Go home" indicator lamp is illuminated when one of following events is detected:

- the transmitter is in local control mode,
- the transmitter is in maintenance mode,
- manual on-air/off-air switching mode has been selected,
- the PCL screen is unlocked,
- the manual exciter changeover mode has been selected (Dual Drive version only),
- an exciter changeover has already been carried out (Dual Drive version only),
- The reserve exciter is on (Dual Drive version only),
- The EXCITER status is NOT CONFORM (The operator chose a MODAP exciter and not a SIRIUS exciter with the install mode)
- The input signal type of SIRIUS is a PRBS.

"On" indicator lamp

The "On" indicator lamp is illuminated when the transmitter is on-air.

"Off" indicator lamp

The "Off" indicator lamp is illuminated when the transmitter is switched off-air.

"Alarm" indicator lamp

The "Alarm" indicator lamp has three coloured segments and indicates the status of the RF power levels based on the measurement from probe in the output of the amplifier channel:

- green: the RF power level is satisfactory,
- orange: the RF power level lies between the fault threshold and the low alarm threshold; these levels can be set and monitored in the "RF LEVEL THRESHOLD" window of the PCL,
- red: the RF power level is higher than the high alarm threshold or lower than the fault threshold; these levels can be set and monitored in the "RF LEVEL THRESHOLD" window of the PCL.

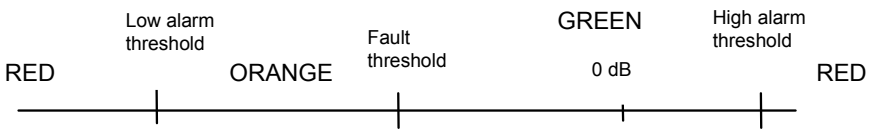

"Unlock" indicator lamp

The "UNLOCK" indicator lamp is illuminated when the PCL screen is unlocked and when the transmitter is in local control mode.

The "UNLOCK" indicator lamp is extinguished when the PCL screen is locked (disabled) and when the transmitter is in remote control mode.

Power level bargraphs on PCL

The illumination of the PCL bargraphs which display the RF power levels, is controlled by the PCL display card, and varies with the measured values of the RF power levels from the reflectometer probes on the output of the amplifier channel.

Information contained is this document is confidential, is THOMSON property and cannot be disclosed in whatever form without prior written authorization of THOMSON.

2.4.4. Log book control system

Each new event, which is detected by the system, is recorded in the logbook; each event is given a title and is dated. The last 500 events can be stored.

The operator has the facilities to control the flow of information which is sent to the log book terminal by using the Local Control Panel.

2.4.5. On/Off commands and change-over override switch

2.4.5.1. Controls

The transmitter configuration can be controlled by override switches mounted on the exciter/CPU interconnection card mother board as follows :

- SW1 : switches the transmitter to installation mode,
- SW2 : switches the transmitter on if the CPU is faulty or not present,
- SW3 : switches the transmitter off if the CPU is faulty or not present,
- SW4 : switches exciter A to air if the CPU is faulty or not present,
- SW5 : switches exciter B to air if the CPU is faulty or not present.

Information contained is this document is confidential, is THOMSON property and cannot be disclosed in whatever form without prior written authorization of THOMSON.

3. Description / Test points / Location of units

3.1. System architecture and location of transmitter units

The Dual Drive version of the transmitter consists of the following units:

- a unit containing two exciters in a redundant switchover system whereby a faulty exciter is replaced by the other. After digital processing, it transposes the input MPEG signals into a RF output.

  Each digital exciter consists of:

  - A SIRIUS rack with :

    A DVB-T (Europe) modulator board , ATSC (America) modulator board or MédiaFLO modulator board

    a processing signal board,

    an RF synthesiser,

    a preamplifier,

    a Very Low Voltage power supply,
  - In the management rack, a RF amplifier (for DVB-T and ATSC modulator only)
- a coaxial relay and its 50 Ohms load so that one of the two digital exciters can be switched on RF amplifier channel.
- an RF amplifier way,
- a filter unit which filters the RF signal,
- a control system as follows:
  - A Central Processing Unit (CPU) which supervises the operation of the transmitter electronics units depending on operator commands and the status conditions in the units.
  - the very low voltage power supply for the CPU and the PCL,
  - an exciter/CPU interconnection card,
- a multiplex card which is the connection unit between the Central Processing Unit and the main transmitter electronic units,
- a Local Control Panel (PCL) which controls the data interchange between the operator and the transmitter,
- a Mains Distribution Panel which provides the mains feeds for the various transmitter power supplies,
- the power supplies for the RF amplifiers,
- the cooling system for the Exciter/CPU system.

The following associated external sub-systems for the SD/DD transmitters combine together to form a complete transmission operation:

- an external cooling system to cool the transmitter,
- an input three-phase mains supply,
- an external changeover system so that the transmitter can be switched between a dummy load and the antenna,

Information contained is this document is confidential, is THOMSON property and cannot be disclosed in whatever form without prior written authorization of THOMSON.

- A remote user interface (optional) with facilities for remote control of the transmitter.

Simple Drive transmitter

The Single Drive version is physically different from the Double Drive version in that it only has one digital exciter .

Information contained is this document is confidential, is THOMSON property and cannot be disclosed in whatever form without prior written authorization of THOMSON.

3.1.1. Location of transmitter units

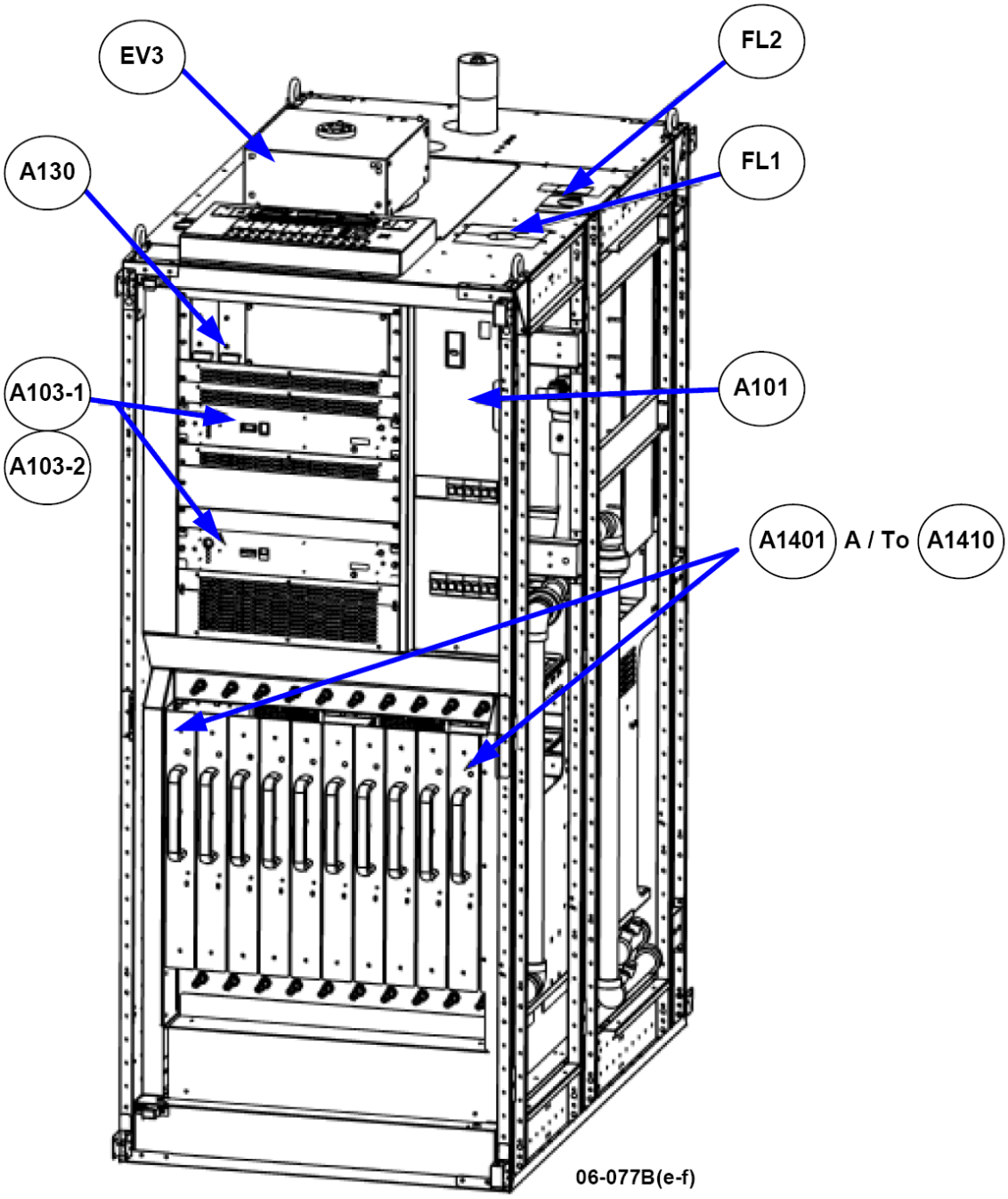

Figure 8 : Localisation of the main units in front of the cabinet B860

EV3	Exhaust fan	A1401 to A1410	RF amplifier units
A130	Gestion rack (Management rack)	A101	Energy plate
A103-1	Exciter A	FL1	Mains filter
A103-2	Exciter B (DD configuration only)	FL2	Mains filter for emergency mains input

Information contained is this document is confidential, is THOMSON property and cannot be disclosed in whatever form without prior written authorization of THOMSON.

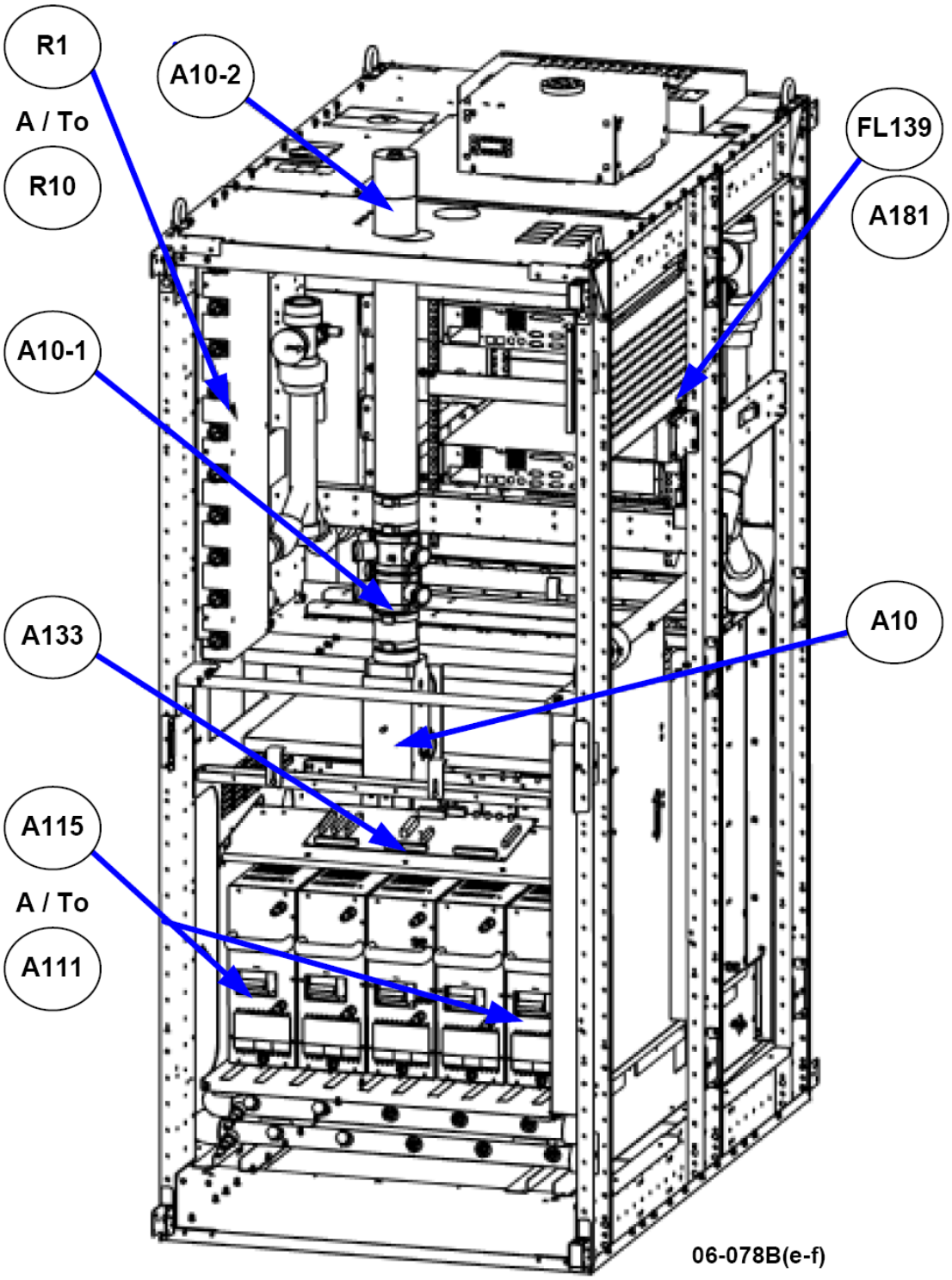

Figure 9 : Localisation of the mains units in rear of the cabinet B860

R1 to R10	Loads network for the F.I.C.S	A10	RF Amplifier combiner (FICS)
A10-1	Measuring probes	A181	ASI Splitter
A133	Multiplex board	FL139	Channel Filter
A115 to A111	Power supply unit	A10-2	Harmonic filter

Information contained is this document is confidential, is THOMSON property and cannot be disclosed in whatever form without prior written authorization of THOMSON.

3.2. Rack : SIRIUS DVB-T UHF 45321627.11

3.2.1. Introduction

The sirius exciter is a key element for *Media FLO™ transmitting technolongy*

The quality of coding and modulation is particularly important to the MediaFLO process. Hence the Sirius exciter has been designed to fulfil the most demanding requirements with respect to performance as well as flexibility in application and operation. Strict adherence to the MediaFLO system specifications is of course a must, but also additional features have been added to the exciter to enhance the value of a given transmission system. Thus emphasis has been placed on easy interfacing to both the signal distribution system and, in particular, to the final TV transmitter, to ensure maximum transmitter coverage at the lowest cost.

Although the TV signal for MediaFLO is coded in a very robust way, thus making it quite rugged, the fact remains that once it is coded and modulated into a MediaFLO physical layer. The exciter compensates the traditional distortions and impairments known from analogue TV will take over in a fast and efficient way.

In digitally transmitted TV signals, factors like noise, inter modulation and non-linearity play a much larger role than in analogue TV signals as they may very well prevent reception and decoding as a whole. This means that the analogue performance of a COFDM exciter is of utmost importance. In the case of the Sirius exciter special thought has been given to the design of the areas that have an influence on the analogue performance.

06/095(e-f)

Information contained is this document is confidential, is THOMSON property and cannot be disclosed in whatever form without prior written authorization of THOMSON.

3.2.2. Applications

The sirius exciter is designed to serve three functions for MediaFLO, i.e., channel coding, RF modulation and manages analogue interface to the transmitter. The exciter, which complies with the MediaFLO Air interface specification, provides the basic functions of converting an MPEG transport stream and converting the resulting data to a MediaFLO modulated IF signal.

The exciter supports the 4K operating mode and mandatory SFN operation.

The primary application is as a terrestrial TV transmitter exciter and thus special attention has been paid to optimizing the total transmitter performance. The COFDM signal itself is very complex with respect to frequency and amplitude and non-linear behaviour of the transmitter power amplifier will cause difficulties for reception as well as interference into adjacent channels. Hence the unit is equipped with an adaptive amplitude and phase non-linearity pre-corrector which digitally optimizes the transmitter performance and thus increases the coverage area available at a given output power level Moreover an adaptive linear-pre-corrector is implemented to compensate eventual amplitude and phase inconveniences of combiner filters etc.

Also due to the complexity of the COFDM signal, the alignment of transmitters is cumbersome. However the built-in test signals greatly facilitate this alignment.

Information contained is this document is confidential, is THOMSON property and cannot be disclosed in whatever form without prior written authorization of THOMSON.

3.2.3. SIRIUS Description

The inputs are MPEG transport stream(s) carrying information about the program content, the number of programs and the program data. The standard MPEG transport stream format is ASI (Asynchronous Serial Interface).

Before modulation the signal is subjected to a heavy error protection process and various interleaving processes. By these means the receiver will work even during bad transmission conditions and be able to regenerate the signal in most situations.

The digital exciter SIRIUS is composed of a box in which are mounted some digital cards:

- A programmed MediaFLO (FPGA) digital card (rep.1)
- A TS/TV card (rep.2)
- A TX card (rep.3)
- A filter card (rep.4)
- A switch/ALE card (rep.5)
- A RF preamplifier unit (rep.6)
- A RF synthesizer unit (rep.7)

There are also some elements which are:

- A main power supply unit(rep.8)
- A cooling unit (rep.9) including 2 fans (rep.10)and one PSU (rep.11)
- A GPS receiver (option) (rep.12)
- A signalization card (LED) (rep.13)

The here after figure shows the main card location of the MediaFLO SIRIUS exciter.

Information contained is this document is confidential, is THOMSON property and cannot be disclosed in whatever form without prior written authorization of THOMSON.

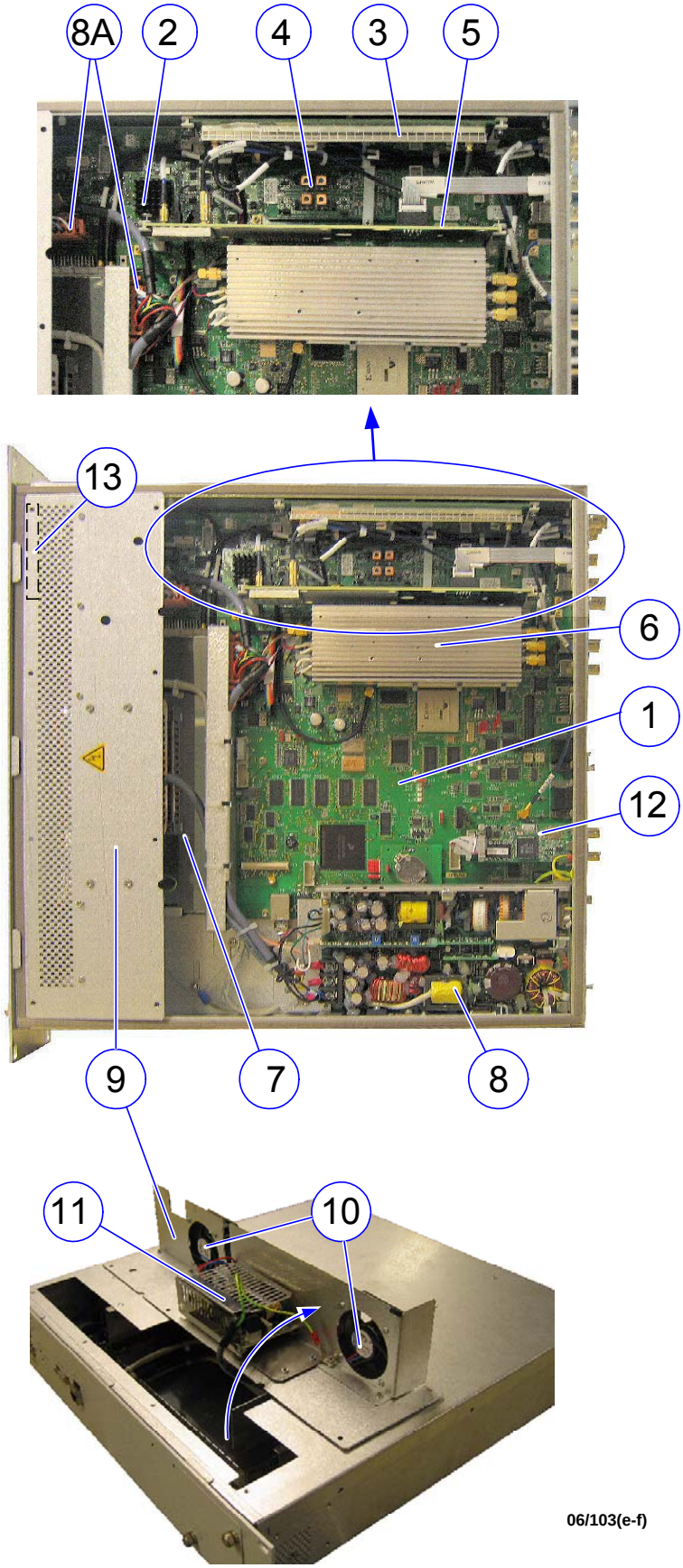

06/103(e-f)

Information contained is this document is confidential, is THOMSON property and cannot be disclosed in whatever form without prior written authorization of THOMSON.