3.2.3.1. Digital board

Topography ref.1

- This version is designed upon FPGA hardware and is dedicated to MediaFLO.
- The serial incoming data stream signal is processed by the channel encoder, which provides an output complex digital signal in the form of parallel I and Q digital signals and a clock reference.
- The channel encoder has a hardware version allowing to perform MediaFLO modulation.
- The equipment can support redundant switching input for MediaFLO operation. The equipment will also be able to manage SFN operation.
- An embedded microprocessor will manage daughter boards such as GPS (optional) OEM receiver, and TS Board.
- RS232, I2C and SPI buses are used for internal control and monitoring of the daughter boards.
- External Control and Monitoring is done through RS232 and/or Ethernet and/or CAN bus.
- The digital board is distributing pilot clocks to SIRIUS boards. 10MHz to the synthesizer and TS board and system clock to the TS board.

3.2.3.2. TS board

Topography ref.2

- The TS board received from the digital board the outputs I&Q signals and clock reference.

  These I&Q signals are processed by the TS board which includes : Clipping, Linear Equalization, Non Linear adaptive pre-correction.
- The Clipping function limits the magnitude of the vector above a given threshold. The magnitudes higher than the threshold are replaced by the threshold complex value.
- The non linear automatic pre-correction function computes the best shoulder level at the output of the transmitter. The process is based on a LUT (Look Up Table) that is loaded from an iterative measurement of the shoulder level. The complex base band outputs of the LUT is then up-converted to the IF frequency.
- The complex IF frequency signals are converted in the analog domain, filtered,(Rep. 4) transposed and amplified to UHF band (Rep. 6 and 7)
- Tx Board (Rep. 3) A daughter board is fitted on the TS board in order to do the up conversion function. External feedback which is coming from the RF signal at the output of the transmitter is used in order to control the shoulder, the linear correction process.
- Feedback signals are then processed by the TS board via the switch/ALE card (Rep. 5) achieves an automatic change over from the both signals (ALE-IN and FDB-IN) to the TS card input.

3.2.3.3. Power supply

Topography ref.8 and 8A

- A specific power supply is used for the whole cabinet to supply +12volts, -12 volts, +5 volts and + 3,3 volts.

Information contained is this document is confidential, is THOMSON property and cannot be disclosed in whatever form without prior written authorization of THOMSON.

3.2.3.4. Synthesizer

Topography ref.7

- A digital programmable synthesizer is provided to deliver a sinusoidal signal at the transmitting frequency between 430 and 900 MHz with an output level of 10 dBm / 50 ohms.

3.2.3.5. GPS receiver

Topography ref.12

- This low power miniature board GPS enable to get the 1 pps signal 10 µs pulse, UTC, 10 MHz.

3.2.3.6. Miscellaneous

The frame of the exciter included one complementary device :

- An LED board for front panel indications. (Rep. 3)

3.2.3.7. Input processing

3.2.3.7.1. SFN System

For the SFN network the input module plays another role. Stuffing locally is just not possible, as all transmitters have to radiate the same information at the same time. A transport stream that supports SFN differs from the MFN transport stream by including the pps and flo frames data signal. The Mega frame structure corresponds to 8 COFDM frames in the 8k mode, 16 frames in 4k mode. The SFN input module must be able to receive external synchronizaton signals, frequency reference and timing signals from a common reference, e.g. a GPS signals.

3.2.3.8. Control of timing

In an SFN application, the control of timing from input to output of the COFDM exciter is extremely important, like the ability of the COFDM exciter to synchronize in frequency and time to an external reference.

Information contained is this document is confidential, is THOMSON property and cannot be disclosed in whatever form without prior written authorization of THOMSON.

3.2.4. Encoding

- Network : SFN
- Channelization : 6MHz
- Transmission modes : 12
- Local network and Wide network supported
- MediaFlo™ Logical Channel supported

Information contained is this document is confidential, is THOMSON property and cannot be disclosed in whatever form without prior written authorization of THOMSON.

3.2.5. Transport Stream Inputs

The Sirius is provided with two serial (ASI) inputs. The active input is selected either via the front panel or the remote control. The input accepts an MPEG transport stream according to the MPEG and MediaFLo recommendations. Both 188 and 204 byte transport packets are supported.

Information contained is this document is confidential, is THOMSON property and cannot be disclosed in whatever form without prior written authorization of THOMSON.

3.2.6. Adaptive non linear pre-correction

The adaptive precorrection algorithm computes automatically the amplitude distribution from the non linear feedback input. Both “one shot” and “adaptive” mechanisms are available. In adaptive mode, when shoulders after power amplification are above a threshold, the exciter computes new set of coefficients. This system allows the best optimisation of the shoulder and MER after the transmitter (estimated to be 1dB better than manual adjustment). Moreover, the algorithm balances the shoulder to have the best output performance.

Information contained is this document is confidential, is THOMSON property and cannot be disclosed in whatever form without prior written authorization of THOMSON.

3.2.7. Adaptive linear correction

The adaptive linear correction function allows to compute a digital 64-tap filter to compensate combiner filter. The 64-tap linear corrector allows to compensate typical 12 pole elliptic filter (typ. tilt 6dB and typ. Group delay 2.5uS).

Information contained is this document is confidential, is THOMSON property and cannot be disclosed in whatever form without prior written authorization of THOMSON.

3.2.8. Alarm circuits

A RS232 connector allows to have 2 isolated inputs and two isolated outputs. In typical application, when the exciter is sued to control amplifier system, these inputs can be used as GO/NO GO in case of amplification failure.

The two outputs can be used also to reset the power amplification system or to trig other equipment.

Information contained is this document is confidential, is THOMSON property and cannot be disclosed in whatever form without prior written authorization of THOMSON.

3.2.9. Frequency references

The exciter is equipped with an internal frequency reference with stability of ± 4ppm, adequate for many applications including multi frequency applications.

The user can either use the internal GPS receiver or an external GPS reference. The smart engine is designed to avoid any frequency jump at RF output. The frequency reference can either be the internal GPS or external 1pps signal or external 10MHz. When SFN is used, the pps signal is mandatory during the initialization phase.

Information contained is this document is confidential, is THOMSON property and cannot be disclosed in whatever form without prior written authorization of THOMSON.

3.2.10. Interface of exciter

3.2.10.1. Front panel

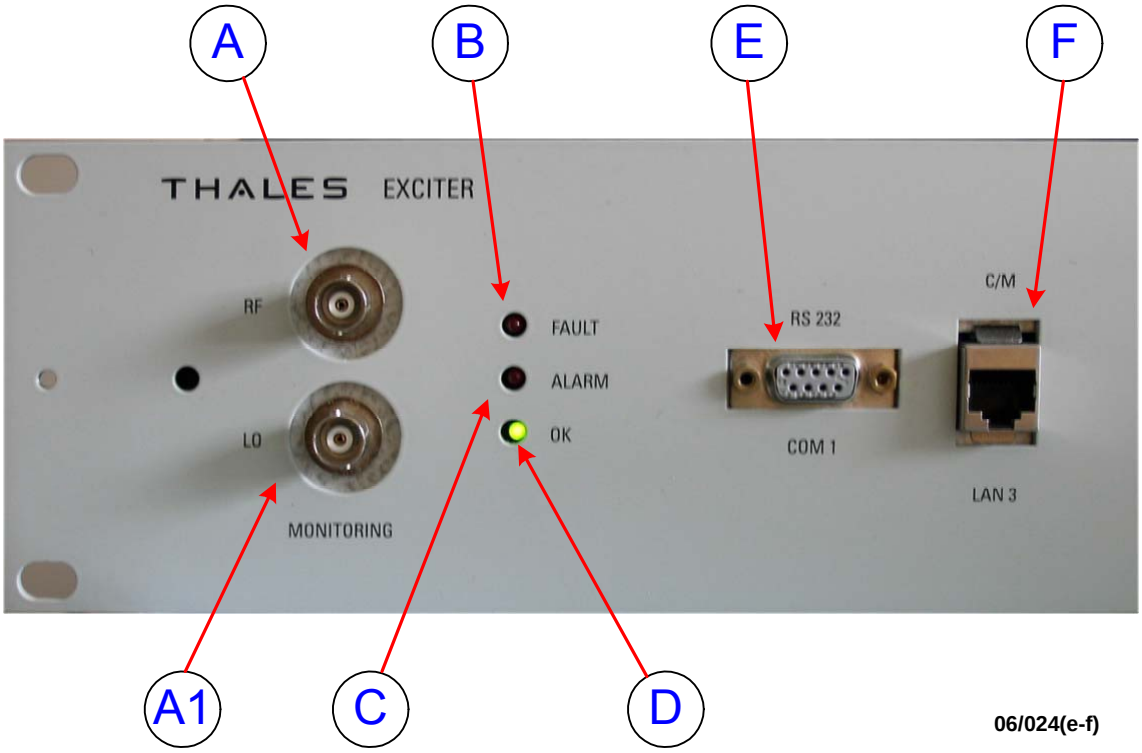

Figure 10 : Front panel (04/271(f-e))

The following appear on the SIRIUS module front panel:

DIAGRAM REFERENCE	COMPONENT	REMARKS
B	Red fault LED	Overall hardware fault ♦ Lit: indicates that one of the boards in the Sirius module is faulty ♦ Extinguished: normal operation
C	Red ALARM LED	MPEG or GPS signals at input (10 MHZ and 1 PPS) ♦ Extinguished: operational ♦ Lit: indicates that one of the input signals is absent. **In SFN mode, the inputs taken into account are:** ♦ ASI 1 ♦ ASI 2 ♦ 10 Mhz ♦ 1 P.P.S.

Information contained is this document is confidential, is THOMSON property and cannot be disclosed in whatever form without prior written authorization of THOMSON.

DIAGRAM REFERENCE	COMPONENT	REMARKS
D	Green OK LED	This LED has two functions: ♦ Extinguished: software fault ♦ Lit: indicates that the microprocessor is operating satisfactorily (software) Note: During the made the powered-on of exciter, the LED "OK" is lit during approximately 15 seconds indicating the operated of power supply then, put out (extinct) during approximately 7 seconds indicating the starting-up of the microprocessor and to end lit. (refer to the diagram below).
		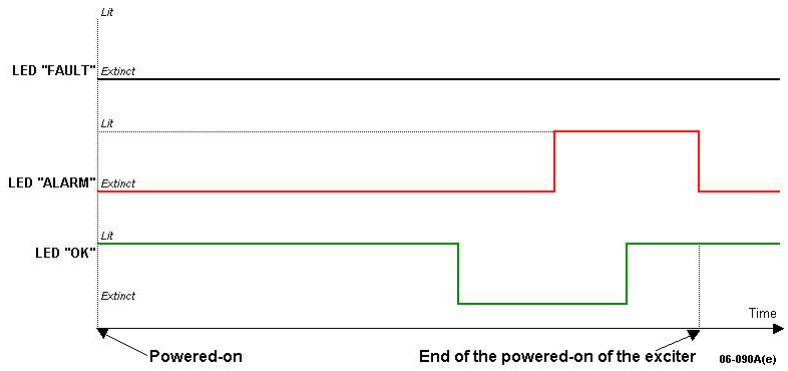

3.2.10.1.1. Test Points

The RF output signal from the SIRIUS module can be monitored at connector **A** on the front of the module.

The RF output signal from the synthesiser unit (LO) can be monitored at connector **A1** on the front panel of the SIRIUS rack.

3.2.10.1.2. Front panel interconnections

The following appear on the SIRIUS module front panel:

DIAGRAM REFERENCE	COMPONENT	REMARKS
E	COM 1 Connector	Reserved for TBM use: Serial link connection (RS232); this enables authorised personnel to have access to the digital card micro program (Modulator). The user must not connect anything to this connector.
F	LAN Connector	Reserved for TBM use: Ethernet link connection (RJ45) with digital card (Modulator). This connection is limited to factory use and gives access to high level functions and fault finding routines in the Sirius module (for use by a technician using a terminal)
G	PC card reader	On the right hand side of the SIRIUS front panel there is a PC card reader which will accept a memory card on which the exciter parameters can be stored (not available)

Information contained is this document is confidential, is THOMSON property and cannot be disclosed in whatever form without prior written authorization of THOMSON.

3.2.10.2. Connection at the rear side of the exciter

06/096(e-f)

At the back side of the exciter are located all the necessary customer inter connexion to assume the driver function in the transmitter.

Information contained is this document is confidential, is THOMSON property and cannot be disclosed in whatever form without prior written authorization of THOMSON.

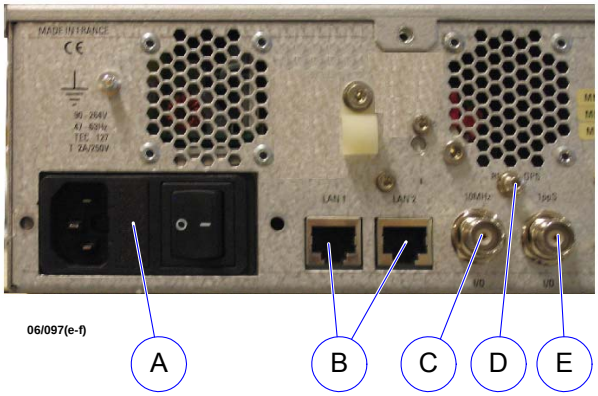

LEFT SIDE OF THE RACK

A	Main power supply input :90 to 254 volts AC, 47 to 63 hertz
B	2 RJ45 connexions for ethernet and ethernet TS information in connexion with the digital board.
C	10 MHz 50 ohms frequency reference input connected to digital board
D	Timing reference 1 pps connected to digital board
E	External GPS input

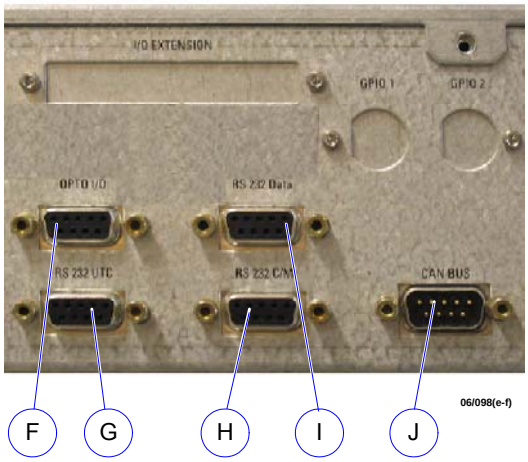

MIDDLE SIDE OF THE RACK

F	Double input and double output opto coupled ports in connexion with digital board
G	DB9 RS232 UTC reference input for GPS
H	DB9 RS232 Local CM in connexion with digital board.
I	DB9 RS232 data for digital board.
J	Can bus in connexion with digital board

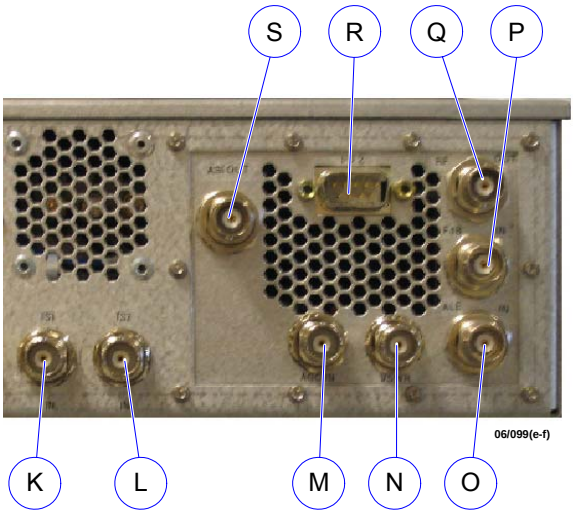

RIGHT SIDE OF THE RACK

K	Low priority DVB-ASI input TS
L	High priority DVB ASI input TS
M	Automatic gain control input
N	VSWR input in connexion to TS board
O	Feedback RF input for linear automatic correction
P	Feedback RF input (-15dBm+/-5dB) no linear automatic correction.
Q	0 dBm with 45dB shoulder RF output
R	DB9 Double input and double output opto coupled ports in connexion with switch/ALE board
S	Optional ASI output

Information contained is this document is confidential, is THOMSON property and cannot be disclosed in whatever form without prior written authorization of THOMSON.

3.2.11. General characteristics

3.2.11.1. Pre-correction

The pre-corrector option supports non-linear pre-correction (gain and phases vs power level) and linear pre-correction (level and group delay response vs. frequency). The pre-corrector allows further control of the peak power clip level (range + 17dB to +7dB peak power relative to average RMS level).

Non-linear correction:

- Gain correction: Max 12dB, subject to available headroom
- Phase correction: -6 to +30 degrees, subject to available headroom

Linear correction:

- Correction points: 64
- Point spacing: 1/20 of nominal spectrum BW
- Amplitude correction: ±10dB
- Amplitude resolution: 0.01dB
- Group delay correction: ±2000ns
- Group delay resolution: 1ns

3.2.11.2. General Electrical Mechanical and Cooling Characteristics

Rack :	19” 1U desired, 2U max, depth 600 <mm
Main Consumption :	< 200 VA
Cooling :	Internal fan, air input on the front panel
Finish :	THALES standard

Information contained is this document is confidential, is THOMSON property and cannot be disclosed in whatever form without prior written authorization of THOMSON.

3.3. SIRIUS cooling assembly

3.3.1. Data sheet - Fans : 91835299

Information contained is this document is confidential, is THOMSON property and cannot be disclosed in whatever form without prior written authorization of THOMSON.

Information contained is this document is confidential, is THOMSON property and cannot be disclosed in whatever form without prior written authorization of THOMSON.

DC axial fan

Series 600 N 60 x 60 x 25 mm

- **General description:** DC fan with electronically commutated external rotor motor. Commutation electronics completely integrated.
- **Impeller material:** Fiberglass-reinforced PA plastic
- **Housing material:** Fiberglass-reinforced PBTP plastic

Nominal data		Voltage	Voltage range VDC	Air flow	Speed	Power consumption	Sound level	Sound pressure level	Ambient temperature	L10 service life at 40 °C	L10 service life at max. temp.	Weight
Type	Motor	VDC	VDC	m³/h	1/min	W	Bel	dB(A)	°C	h	h	kg
614 NHH-119	--	24	18 - 28	56	6850	3.0	5.7	41	-20 .. 70	60000	30000	0.085

Subject to modification

Characteristic: Pressure over air flow

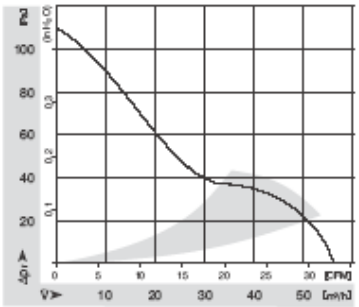

Specific drawing

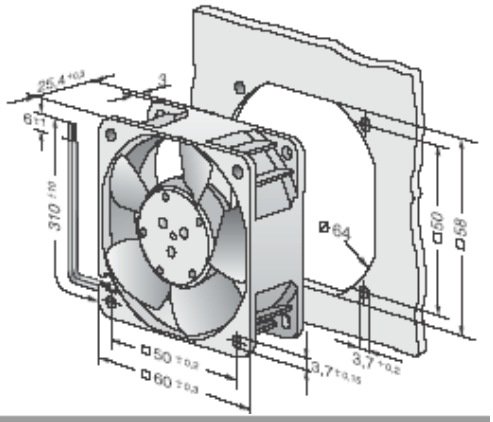

Technical description

- **General description:** DC fan with electronically commutated external rotor motor. Commutation electronics completely integrated.
- **Housing material:** Fiberglass-reinforced PBTP plastic
- **Direction of rotation:** Right, looking at rotor
- **Electrical connection:** 2 single strands AWG 22, TR 64
- **Blocking protection:** With electronic blocking and overload protection
- **Option:** Speed signal
- **Impeller material:** Fiberglass-reinforced PA plastic
- **Bearings:** Ball bearings
- **Direction of flow:** Air exhaust over bars
- **Motor protection:** With electronic reverse polarity protection. The fan runs only if the polarity is correct.
- **Approvals:** VDE, CSA, UL, CE

Order No.
LZ28-1

Technical description

- **General description:** Guard grille in accordance with EN 294
- **Material:** Rust-protected steel wire

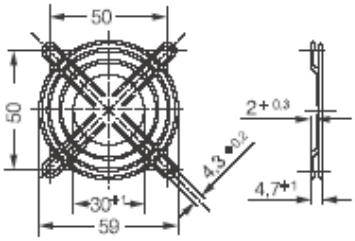

Contact

ebm-papst St. Georgen GmbH & Co. KG
Hermann-Papst-Straße 1
D-78112 St. Georgen
Phone +49 (0) 7724 / 81-0
Fax +49 (0) 7724 / 81-1309
info2@de.ebmpapst.com
www.ebmpapst.com

3.3.2. Data sheet – Power Supply : 91851992

25W 1~2 Output Switching Power Supply

- Universal AC input / Full range
- Protections: Short circuit / Overload / Over voltage / Over temp.
- Cooling by free air convection
- Approvals: UL / CUL / TUV / CE
- Fixed switching frequency at 100KHz
- Low leakage current <0.5mA
- 100% full load burn-in test
- Low cost, high reliability
- 2 years warranty

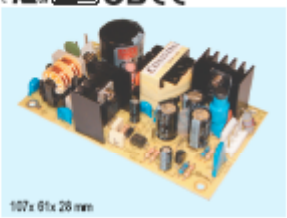

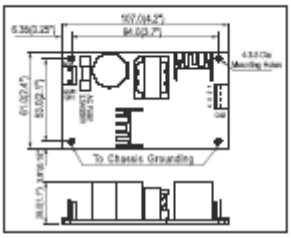

AC input voltage range ····· 85~264VAC; 120~370VDC
AC inrush current ····· Cold start, 40A at 230VAC
Overload protection ····· >105% hiccup mode, auto-recovery
Over voltage protection ····· 115%~135% rated output voltage
Over temp. protection ····· U1, Tj:135°C, power shutdown
Leakage current ····· Less than 0.5mA at 240VAC
Withstand voltage ····· I/P-O/P: 3KVAC, I/P-FG:1.5KVAC, 1minute
Working temperature ····· -10~60°C (refer to output derating curve)
Safety standards ····· UL60950-1, TUV EN60950-1 approved
EMC standards ····· EN55022 class B, EN61000-3-2,3, EN61000-4-2,3,4,5
Connection ····· 3P, 4P/ 3.96mm pitch, Molex P/N: 41791-03, 04
Packing ····· 0.14kg ; 96pcs / 15.0kg / 1.30CUFT(PS-25)
0.15kg ; 96pcs / 15.9kg / 1.30CUFT(PD-25)
0.13kg ; 96pcs / 15.4kg / 1.30CUFT(PD-2503)

◆Single output

Stock No.	Model No.	Output	Tol.	R&N	Effi.
12001	PS-25-3.3	3.3V, 5.0A	±3%	80mV	66%
12002	PS-25-5	5V, 5.0A	±2%	80mV	74%
12003	PS-25-7.5	7.5V, 3.3A	±2%	80mV	76%
12004	PS-25-12	12V, 2.1A	±2%	100mV	78%
12005	PS-25-13.5	13.5V, 1.9A	±2%	100mV	78%
12006	PS-25-15	15V, 1.7A	±2%	100mV	78%
12007	PS-25-24	24V, 1.0A	±2%	240mV	79%
12008	PS-25-27	27V, 0.9A	±2%	240mV	79%
12009	PS-25-48	48V, 0.5A	±2%	350mV	79%

◆Dual output

Stock No.	Model No.	Output	Tol.	R&N	Effi.	Max.
12031	PD-25A	5V, 0.2~2.5A	±2%	50mV	71%	25W
		12V, 0.1~1.5A	±6%	150mV		
12032	PD-25B	5V, 0.2~2.0A	±2%	50mV	77%	25W
		24V, 0.1~1.0A	±6%	200mV		
12033	PD-2505	5V, 0.1~3.0A	±6%	50mV	73%	25W
		-5V, 0.1~2.5A	±6%	50mV		
12034	PD-2512	12V, 0.1~1.2A	±4%	50mV	74%	24W
		-12V, 0.1~1.2A	±4%	50mV		
12035	PD-2515	15V, 0.1~1.0A	±4%	50mV	75%	24W
		-15V, 0.1~1.0A	±4%	50mV		
12036	PD-2503	3.3V, 0.2~5.0A	±2%	50mV	72%	25W
		5V, 0.1~4.0A	+5%, -8%	50mV		

Information contained is this document is confidential, is THOMSON property and cannot be disclosed in whatever form without prior written authorization of THOMSON.

3.4. Transmitter Management rack DD 45323663.02

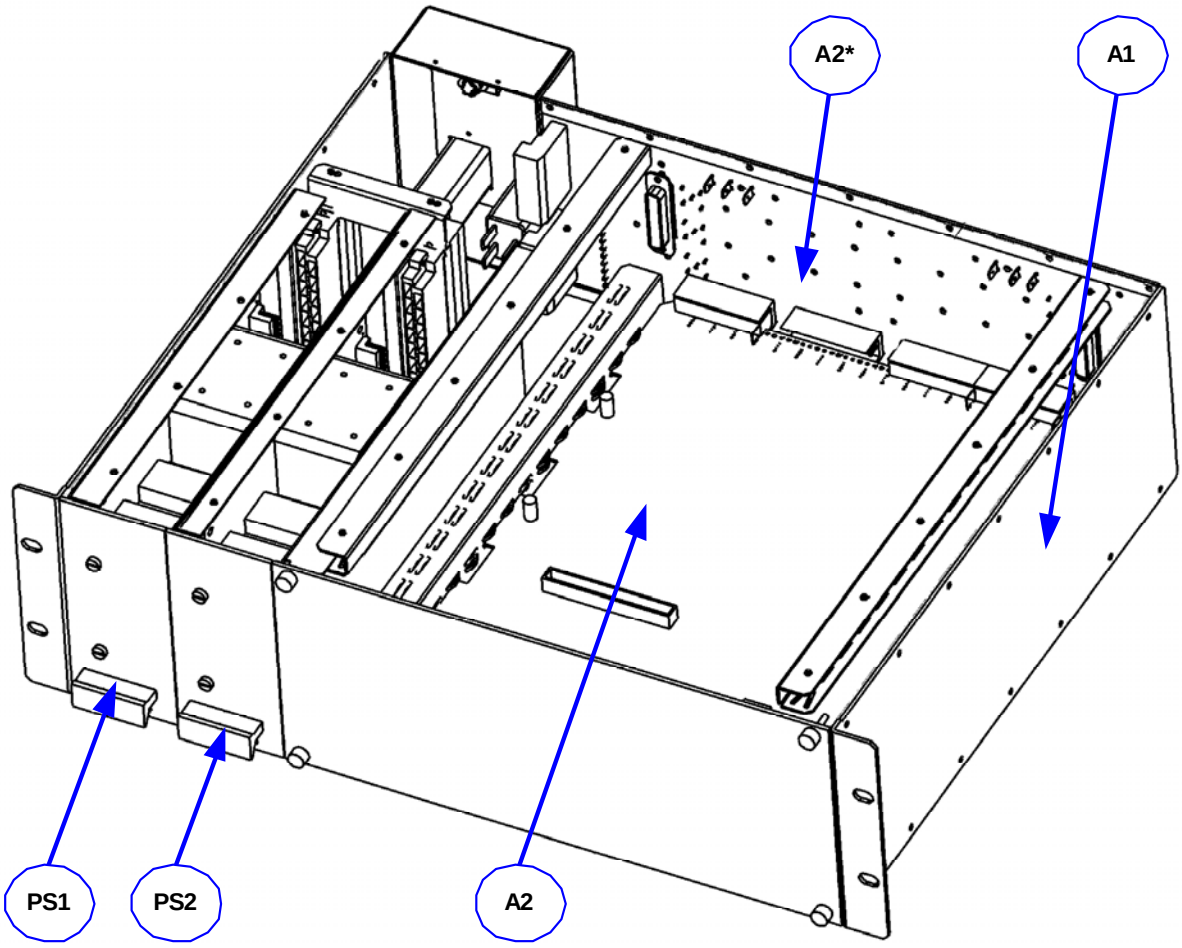

ITEM	DESIGNATION	*DESIGNATION*
A2	Carte CPU (TH860)	*CPU board (TH860)*
A2*	CarteinterconnexionCPU/EMB/PA	*Management system interconnection board, CPU/EXCITER/PA*
PS1	Alimentation 1 (+5V, ±12V, +24V)	*Power supply 1 (+5V, ±12V, +24V)*
PS2	Alimentation 2 (+5V, ±12V, +24V)	*Power supply 2 (+5V, ±12V, +24V)*

06-85A (e-f)

Figure 11 .Management rack

Information contained is this document is confidential, is THOMSON property and cannot be disclosed in whatever form without prior written authorization of THOMSON.

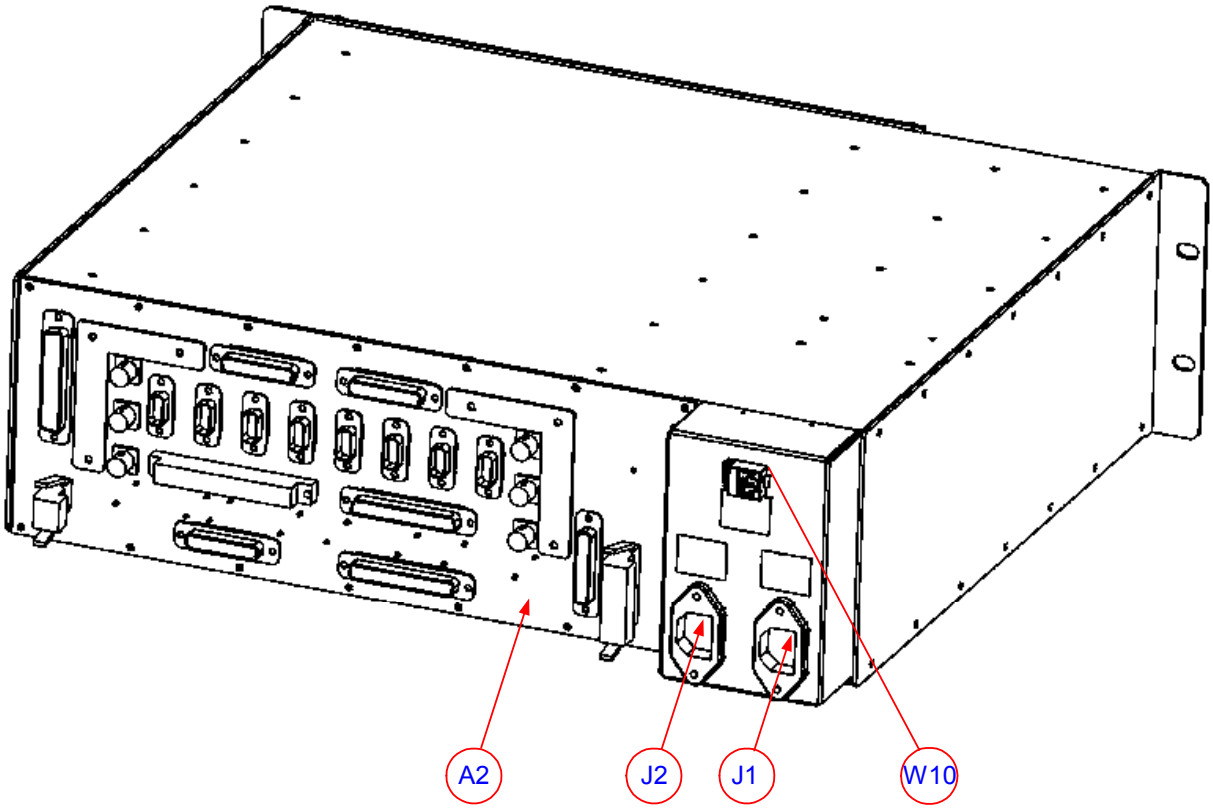

ITEM	DESIGNATION	*DESIGNATION*
A2	**Carte interconnexion gestion, CPU/EMB/PA**	*Management system interconnection board,CPU /EXCITER/PA*
J1	**Entrée secteur de l'alimentation 1 CPU/PS1**	*Mains input CPU/PS1 power supply unit 1*
J2	**Entrée secteur de l'alimentation 2 Ecran/PS2**	*Mains input Screen/PS2 power supply unit 2*
W10	**Entrée Ethernet RJ45**	*Input Supervision RJ45*

06/094(e-f)

Figure 12 : Pre-equipped box

Information contained is this document is confidential, is THOMSON property and cannot be disclosed in whatever form without prior written authorization of THOMSON.

3.5. Interconnections Board EMB/UC TX Numerique 45324511

3.5.1. Outline

In addition to housing the transmitter CPU card, this card also acts as an interface between the CPU card and the other transmitter equipment.

The exciter/CPU interconnection card is an essential part of the transmitter; it provides for the following:

- interconnections for DC, analogue signals and logic data between the exciter(s) and the control system (Central Processing Unit),
- interconnections between the Central Processing Unit (CPU) card and the rest of the transmitter,
- interconnections between the Central Processing Unit card on the one hand and the user interfaces (PCL and remote user interface) together with equipment with connections with systems external to the transmitter (GPS, modem) on the other,
- exciter changeover switching operations.

3.5.1.1. Architecture and operational description

The exciter/CPU interconnection card consists of a mother board and a daughter board.

It houses the CPU card and the following:

- internal data buses which provide for data exchange between the various card connectors,
- connectors for signal and data interchange with :
  - the MODAP unit,
  - the RF switcher (Double Drive transmitter),
  - the multiplex card,
  - the user interfaces,
  - external units,
- connections between the various card connectors,
- connections used to distribute the supply voltages from the very low voltage power supply card of the Central processing unit to:
  - the Central Processing Unit card,
  - the Local Control Panel (PCL),

For the most part the mother board contains the connections with the MODAP unit and the daughter board contains the connections with the rest of the transmitter.

3.5.2. Protection and surveillance devices

The exciter/CPU interconnection card has no need of internal protection and surveillance devices; nevertheless it incorporates protection devices for the power supplies which feed:

- the logic system,
- the PCL,
- the multiplex card.

Information contained is this document is confidential, is THOMSON property and cannot be disclosed in whatever form without prior written authorization of THOMSON.

These fuses go open circuit in over-current conditions and reset automatically; they cannot be changed on line.

Fuses on the mother board

PROTECTIVE DEVICE	POWER SUPPLY SOURCE	DESTINATION
F1	+5 V CPU power supply card	MODAP logic system
F2	+12 V CPU power supply card	Multiplex card

Fuses on the daughter board

PROTECTIVE DEVICE	POWER SUPPLY SOURCE	DESTINATION
F1	+5 V CPU power supply card	PCL
F2	+12 V exciter A power supply card	PCL
F3	-12 V exciter A power supply card	Multiplex card
F4	+12 V exciter B power supply card	PCL
F5	-12 V exciter B power supply card	Multiplex card
F6	+24 V CPU power supply card	PCL
F7	+24 V CPU power supply card	
F8	-12 V exciter A + B power supply card	Provisional
F9	+12 V exciter A power supply card	Provisional
F10	+12 V exciter B power supply card	Provisional
F11	-12 V exciter A power supply card	PCL
F12	-12 V exciter B power supply card	PCL

3.5.3. Indicator lamps and message displays

Since this card is only concerned with interconnections, it does not have any indicator lamps or operational status indicators.

3.5.4. Controls

The transmitter configuration can be controlled by override switches mounted on the exciter/CPU interconnection card mother board as follows :

- SW1 : switches the transmitter to installation mode,
- SW2 : switches the transmitter on if the CPU is faulty or not present,
- SW3 : switches the transmitter off if the CPU is faulty or not present,
- SW4 : switches exciter A to air if the CPU is faulty or not present,
- SW5 : switches exciter B to air if the CPU is faulty or not present.

3.5.5. Power input

Since this card is only concerned with interconnections, it does not have any need for a power supply. The few internal components which need power use the voltage supplies from the exciter and CPU power supply cards.

Information contained is this document is confidential, is THOMSON property and cannot be disclosed in whatever form without prior written authorization of THOMSON.

3.5.6. Connections and data transfer

The mother board connectors are as follows:

- on one side : connectors J6, J12, J20, J21 to the CPU,
- on the other side:
  - J6.1, J12.1, J20.1, J21.1: to the daughter board,
  - J13 : connection to a GPS receiver (option) which provides sync signals for the modulator,
  - J30 : connects the CPU with the exciter RF switching relays,
  - J40 : connects to remote user interface via RS232 serial link,
  - J50 : connects CPU to exciter A,
  - J70 : connects CPU to external DVB -T modulator (exciter A),
  - J80 : connects CPU or exciter A to external equipment via RS232 or RS485 serial link (provisional),
  - J90 : connects CPU to external DVB -T modulator (exciter B),
  - J100 : connects CPU or exciter B to external equipment via RS232 or RS485 serial link (provisional),
  - J150 : connects CPU to exciter B.

The daughter board connectors are as follows:

- on one side : connectors J6, J12, J20, J21 to the mother board,
- on the other face it has the following connectors for connections with the rest of the transmitter :
  - J1, for input command signals from a hard wired remote user interface to the Central Processing Unit card,
  - J2, J3, for output status signals from the Central Processing Unit card to a hard wired remote user interface,
  - J4, for the transfer of command signals, in addition to status and fault signals between the various transmitter units (other than the exciter and CPU) and the multiplex card,
  - J5, for the input of messages from the multiplex card about faults in the various transmitter units (other than the exciter and CPU),
  - J7, for data exchange with the PCL and for feeding very low voltage supplies to the PCL,
  - J8, not used,
  - J9, for the input of very low voltage supplies from the CPU power supply card,
  - J10
  - J11, for connections via the serial link between the CPU and a remote user interface (RS232 with JBUS protocol).

3.5.7. Cooling

The exciter/CPU interconnection card is cooled by natural convection.

Information contained is this document is confidential, is THOMSON property and cannot be disclosed in whatever form without prior written authorization of THOMSON.

3.5.8. Transportability

No special requirements.

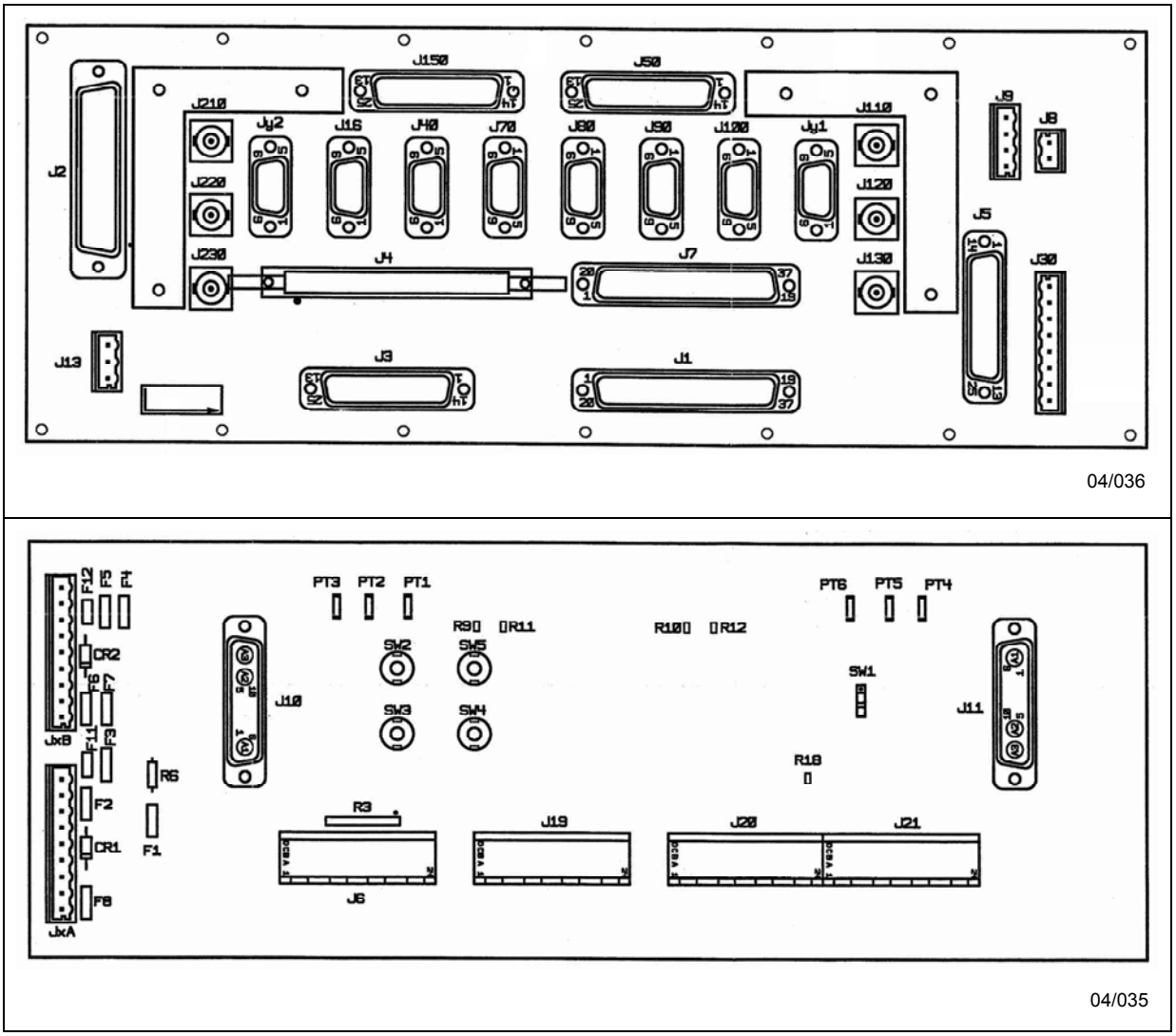

Figure 13 : Connection card Management/SIRIUS (2 faces)

Information contained is this document is confidential, is THOMSON property and cannot be disclosed in whatever form without prior written authorization of THOMSON.

3.6. Preamplifier RF Unit 45326079

3.6.1. Presentation

NOTE :	The preamplifier Module is "**Hot Swap**" compatible. Defective PA Modules may be removed and replaced without shutting the entire transmitter system down.

The RF preamplifier is designed to amplify residual side band modulated television analogue signals for all standards, and digital signals in DTV (US - ATSC standard and Europe - DVB-T standard). It is designed to work in UHF transmitters for bands IV and V.

The preamplifier output power is approximately 0,8 W peak at 1 dB of compression with an minimum gain of 20 dB.

The preamplifier is fully solid-state (Hybrid technology). The module is fitted with an the interface connector SUB-D (type B3W13) for 240V AC mains input, for output of fault data used by the transmitter control system and for RF connectors.

One small Handle is used to insert and remove the preamplifier module.

3.6.2. Architecture

The RF preamplifier consists of the following parts :

- A printed circuit board including :
  - class A amplifier,
  - an output coupling stage,
  - the peak detector circuit and RF monitoring,
  - an integrated power supply unit.
- Heat sink
- Protection cover

Figure below shows the positions of the various parts in the preamplifier.

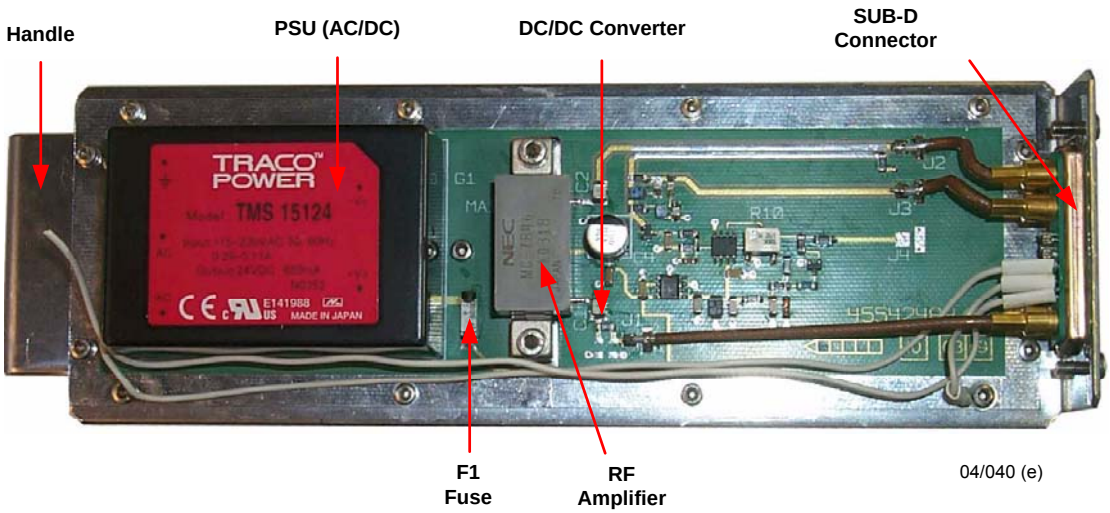

Figure 14 : UHF preamplifier

Information contained is this document is confidential, is THOMSON property and cannot be disclosed in whatever form without prior written authorization of THOMSON.

3.6.3. Operational description

The input RF signal passes through the following stages.

- A class A preamplifier to deliver a rms power of 0.8 W.
- An output coupling stage, with a slope correction circuit and which sends an RF feedback signal to:
  - the peak detector circuit (provides the status of the preamplifier),
  - which the latter then sends out from RF monitoring outputs to the pre-amplifier.

The built-in power supply G1 provides 24 V used to bias the hybrid amplifier MA1 and equally to feed the DC/DC converter MA3. It supply the buffer circuit MA2 of the peak detector CR1. The power supply G1 is protected by fuse F1 from short-circuits.

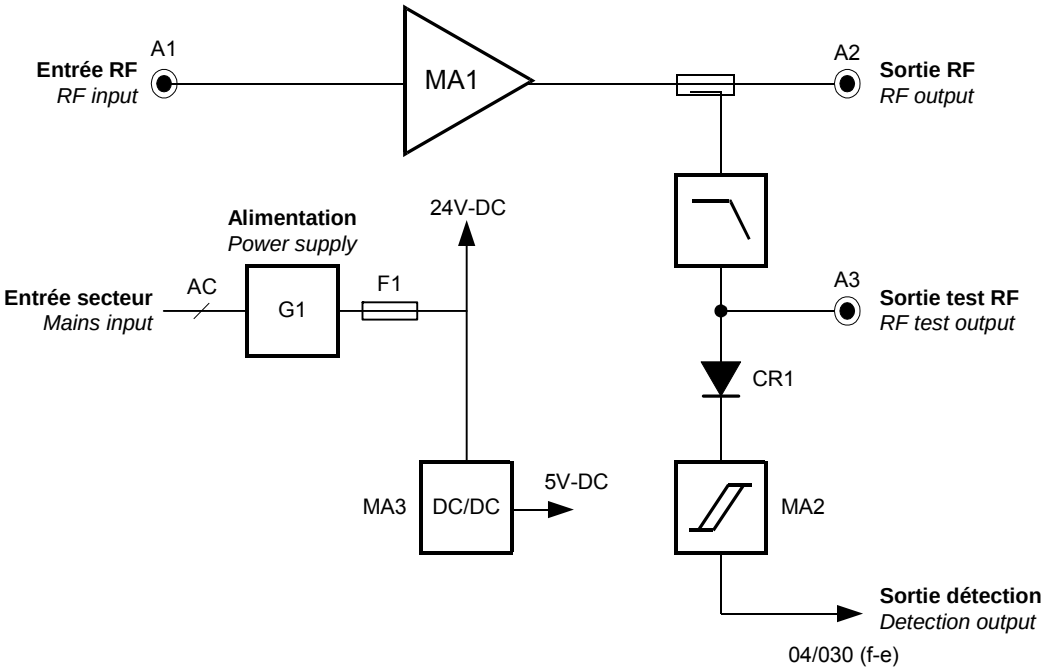

Figure 15 : Block diagram of the preamplifier

3.6.4. Indicator lamps and message displays

The RF preamplifier does not have any indicator lamps or operational status indicators.

NOTE :	The PCL «EXCITER» window displays the status condition of a preamplifier.

3.6.5. Test points

Connector A2 on the rear of the panel provides a test point monitoring feed of the preamplifier RF output signal.

The level of the monitoring feed is 20 dB down on the output signal to the power amplifier unit.

Information contained is this document is confidential, is THOMSON property and cannot be disclosed in whatever form without prior written authorization of THOMSON.

3.6.6. Adjustment controls

The pre-amplifier has no controls on its front and rear panels.

3.6.7. Protection and surveillance devices

The RF preamplifier module is fused by an CMS fuse F1 (1A) at the +24VDC input.

3.6.8. Power input

The RF preamplifier gets its single phase mains feed from the mains distribution panel. The mains input connector is fed from connector J10 or J11 on the EXCITER/CPU interconnection board in bottom of the transmitter control system frame.

3.6.9. Connections

The RF preamplifier module has one SUB-D connector (Type B 3W13) on its rear panel as follows:

- A1 : RF input.
- A2 : RF monitoring.
- A3 : RF output.
- Pins 1 & 6 : 240 V AC **Neutral**.
- Pins 8 & 3 : 240 V AC **Phase**.
- Pin 5 Detection output.
- Pins 7 & 2 : GND.

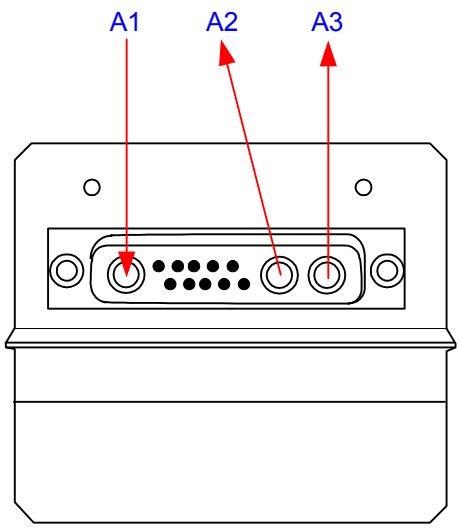

04/038

3.6.10. Cooling

The preamplifier module could be cooled by natural convection.

3.6.11. Transportability

No special requirements.

Information contained is this document is confidential, is THOMSON property and cannot be disclosed in whatever form without prior written authorization of THOMSON.

3.6.12. Environmental Conditions

Guaranteed specifications (alt≤1500m) :	0 à 55°C.
Guaranteed operation :	-10 à 60°C.
Storage temperature :	-30 à 60°C.
Relative humidity :	95 % without condensation.

3.6.13. Mechanical Characteristics

size including handle and connector (W x H x D) :	230x60x70 mm.
weight :	0.8 kg max

3.6.14. Electrical Characteristics

The electrical characteristics below are given for above environmental conditions.

Input max. level without destruction:	20 dBm max.
Output power (1 dB compression on VSWR ≤ 1.2 and 470 ≤ F ≤ 862 MHz):	0.8 W min.
Instantaneous bandwidth:	470 à 862 MHz.
Gain in bandwidth:	21 dB ± 1 dB.
Gain linear distortions in 470 à 862 MHz for 20 dBm:	± 0.75 dB max.
Input matching in bandwidth:	10 dB min.
Output matching in bandwidth:	10 dB min.
Shoulders for Ps = 100 mW rms:	- 40 dBc min.
Mains power supply:	240 Volts AC.

Information contained is this document is confidential, is THOMSON property and cannot be disclosed in whatever form without prior written authorization of THOMSON.

3.7. Central Processing Unit (CPU-TH860)

3.7.1. Outline

NOTA :	The SNMP protocol is described in Annexes.

The Central Processing Unit supervises the running of the transmitter; its principal functions are as follows :

- to monitor and control the various units in the transmitter,
- to store the faults in these units together with dates and times,
- to control the various interfaces in conjunction with a local or remote operator.

3.7.2. Architecture

The Central Processing Unit is on a double Euro card and contains :

- the Central Processing Unit,
- an EPROM memory,
- an SRAM memory,
- a connector for PCMCIA card,
- a flash EPROM memory,
- 4 timers,
- a time and date clock,
- an internal configuration port containing 7 jumper straps which can be read by a micro controller,
- on/off inputs/outputs,
- RS 232 serial link connectors,
- one analogue input,
- One Ethernet input.

3.7.3. Protection and surveillance devices

The Central Processing Unit has a unit for monitoring the +5 V supply. During switch-on and switch-off the output buffers wait for their confirmation command from the micro controller before exchanging data with the external system. These output buffers are disabled as soon as the +5 V voltage supply rail drops below 4.5 V.

Information contained is this document is confidential, is THOMSON property and cannot be disclosed in whatever form without prior written authorization of THOMSON.

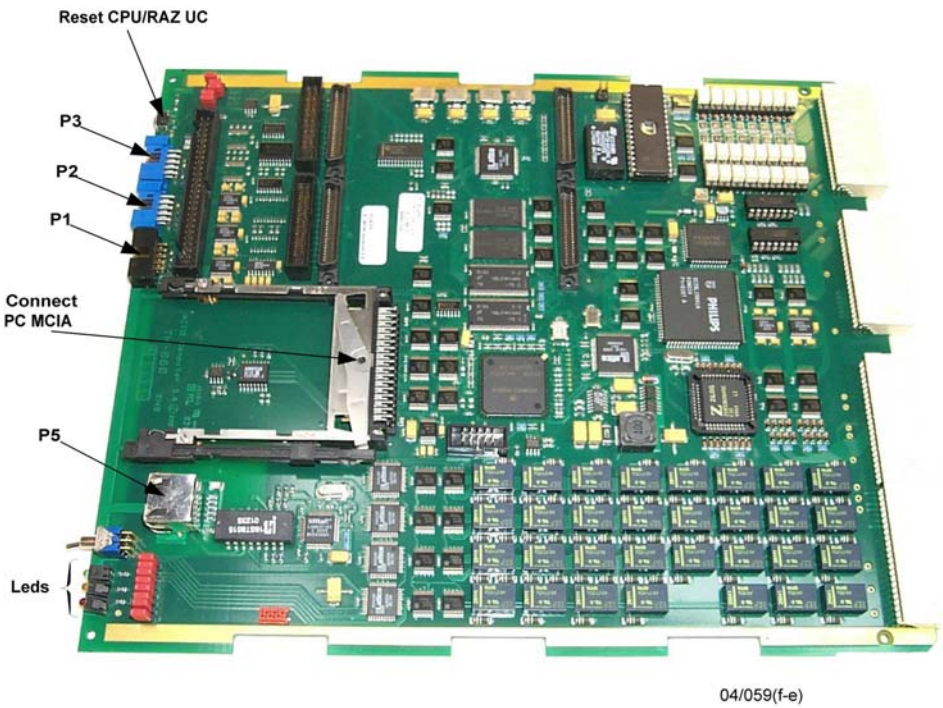

Figure 16 : CPU board – TH860

3.7.4. Indicator lamps and message displays

The Central Processing Unit card has the following on its front panel :

- a green indicator lamp : when this flashes the memory access is operating satisfactorily,
- an orange/yellow indicator lamp: when this is lit up the CPU card is powered,
- an red indicator lamp: when this is lit up CPU board is not operating properly (light up a short time during CPU start up).

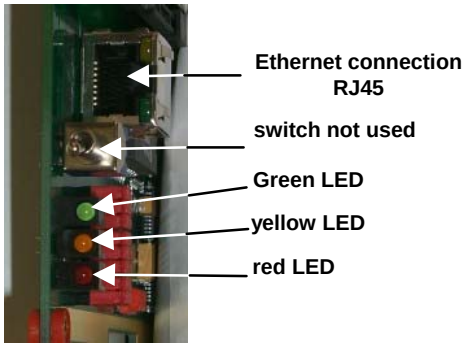

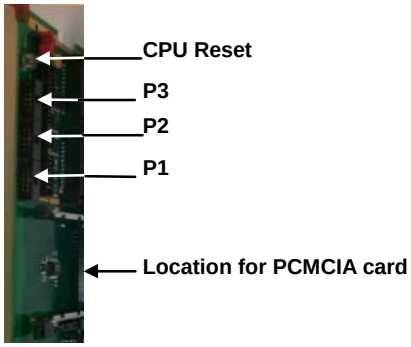

3.7.5. Controls

The switch on the CPU front panel is not used.

3.7.6. Power input

The Central Processing Unit card is powered by +5 V and +12 V DC from the CPU power supply card in the front of the transmitter.

Information contained is this document is confidential, is THOMSON property and cannot be disclosed in whatever form without prior written authorization of THOMSON.

3.7.7. Connections and data transfer

The Central Processing Unit has the following connectors:

On front panel :

- connector P1 : spare,
- connector P2 : for serial link (RS 232C) connection with the "Log book" terminal,
- connector P3 : spare,
- Connector P5: for Ethernet network,

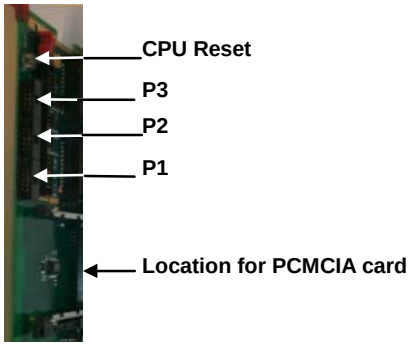

In the rear panel, the following connectors plug into the exciter/CPU interconnection card :

- connector J6 which has :
  - the following outputs :
    - command signals from the hard wired remote user interface (via connector J1 on the interconnection card),
    - command to RF relay for switching between exciter A and exciter B, situated on the exciter/CPU interconnection card,
    - the synthesizer reset command,
    - RF switching commands,
    - the on/off command for the amplifier power supplies (via interconnection card).
  - the following inputs :
    - values for the vision, sound and antenna RF power levels sent from the RF probes (via the PCL and connector J7 of the interconnection card),
    - the +5 V supply from the CPU power supply card (via interconnection card),
  - the bus connections to the multiplex card,
- connector J20 which has :
  - the following outputs :
    - commands to the PCL indicator lamps (via connector J7 of the interconnection card),
    - RF switching commands,
  - the following inputs :
    - commands from the PCL (via connector J7 of the interconnection card),
    - presence signals from the exciters,
    - the +12 V supply from the CPU power supply card (via interconnection card),
  - connections to the PCL data bus (bus RS 232), (via connector J7 of the interconnection card),

Information contained is this document is confidential, is THOMSON property and cannot be disclosed in whatever form without prior written authorization of THOMSON.

- connections via the data bus with MODAP A, (via connector J50 of the interconnection card),
- connections to the remote user interface data bus (RS 232 bus), (via connectors J11 or J40 of the interconnection card),
- connections to the data bus to the synthesizers (via connector J50 of the interconnection card),

♦ connector J21 :

- for output status signals to a hard wired remote user interface (via connectors J2 and J3 of the interconnection card),

♦ connector P6 which has :

- connections via the data bus with MODAP B, (via connector J150 of the interconnection card),
- connections via the data bus with external equipment using RS 232 or RS 485 serial links (via connectors J70, J80, J90, J100 of the interconnection card).

3.7.8. Cooling

The Central Processing Unit is cooled by the exciter cooling system. Input air is drawn into the cooling chamber which is situated below the frame which houses the exciter cards ; the air then circulates through the cards.

Information contained is this document is confidential, is THOMSON property and cannot be disclosed in whatever form without prior written authorization of THOMSON.

3.8. Power supply unit for UC/Multiplex/PCL 61390563

Installation Notes

LPQ150-C Series *150 Watts* *Quad Outputs*

ASTEC

Input Specifications

Input range	85 VAC to 132 VAC / 170-264 automatically selected 220 to 370 VDC
Frequency	47 - 63 Hz
Inrush current	< 38 A peak
Efficiency	70% typical at full load
EMI filter	Meets FCC Class B CISPR 22 Class B (includes EN55022 class B and VDE 0878 PT3 class B)
Electromagnetic compatibility	Meets IEC801-2 level 3, IEC801-4 level 3 and IEC801-5 level 3
Safety ground leakage current	< 0.5mA @ 50/60Hz, 264Vac input

Output Specifications

Maximum total wattage	Without cover: 110 W convection; 150 W with 30 CFM forced air. With cover: 75W convection; 130W with 30CFM forced air.
Adjustment range	± 5% on main 5 - 25V on output 4 on LPQ152/3
Cross regulation	±2% on output 1 ±3% on outputs 2, 3 & 4
Hold-up time	20 ms at 110W load and 115 VAC nominal line
Overload protection	Short circuit protection on all outputs. Auto recovery. Total power limited @ 110% to 145% above peak rating
Overvoltage protection	5V output: 5.7 to 6.7 Vdc. Recycle AC to reset.

Environmental

Operating temperature: 0°C to 50°C ambient; derate at 2.5% / °C from 50°C to 70°C
Storage temperature: -40°C to 85°C
Thermal regulation: ± 0.04% / °C
MTBF: > 100,000 hours at full load and 25°C ambient conditions

Safety

VDE	0805/EN60950 (IEC950)
UL	UL1950
CSA	CSA 22.2-234 Level 3
NEMKO	EN 60950/EMKO-TUE (74-sec) 203
BABT	EN60950/BS7002
CB	Certificate and report

CE This product is CE marked following the provisions of the Low Voltage Directive 73/23/EEC

Notes (refer to table)

1. Peak current lasting < 30 seconds with a maximum 10% duty cycle.
2. At 25°C including initial tolerance, line voltage, load currents and output voltages adjusted to factory settings.
3. Peak-to-peak with 20 MHz bandwidth and 10 μF in parallel with a 0.1 μF capacitor.
4. Output 4 is fully floating. It can be referenced positive or negative. It is also fully user adjustable between 5 and 25V, factory set at 5V.
5. Minimum load required for correct operation of power supply. Do not use without minimum load connected.
6. Total power drawn must not exceed 110W with convection cooling or 150W fan cooled.

Mating Connectors

(SK4) AC Input: Housing Molex 09-91-0500 (or 26-03-4050)
Contacts: 18/24 AWG Molex 08-50-0106 (or 08-58-0189)
(SK3) Main DC Output: M4 spade
(SK2) Aux DC o/p: Housing Molex 09-91-0900 (or 26-03-4090) / Power OK
(SK1) Auxiliary: Housing Molex 51110-0851
Contacts: 28/30 AWG Molex 50394-8051

Notes

1 Specifications subject to change without notice.
2 All dimensions are in mm and (inches).
3 Output Common capacitivily coupled to chassis earth.
4 This power supply must be earthed for safe operation via SK4-1 connector.
5 Specifications are for convection rating without cover unless otherwise stated.
6 Weight 0.80 kg / 1.75 lb.

Auxiliary Connections

1. +5V Remote sense - optional connection- can compensate for up to 0.5V drop; internal local sense connected if not used. Protected against reverse connection.
2. Power OK signal;-TTL compatible signal goes high 50-150ms after switch on. Goes low >1.5 ms before loss of regulation
3. Remote inhibit is via isolating optocoupler, external 5V @ 10mA required to inhibit output.
4. Paralleling power supplies - when the 'C share' signal is connected between two power supplies the main 5V outputs will current share.

Warning: Hazardous mains voltages present within this unit. Please see enclosed 'Astec Installation and Operating Instructions'. Use of optional cover kit is recommended for safe operation.

Fusing

Input fuse 5A 20mm Quick Acting HBC mains fuse - only replace with same type and rating to maintain safety standards.

Information contained is this document is confidential, is THOMSON property and cannot be disclosed in whatever form without prior written authorization of THOMSON.

Model Number	Output Voltage	Minimum Load[5]	Maximum Load with Convection Cooling[6]	Maximum Load w/ 30CFM Air[6]	Peak Load[1]	Regulation[2]	Ripple P/P (PARD)[3]
LPQ152-C	5 V	2 A	15A	22 A	30A	± 2%	50 mV
	12 V	0.1 A	6 A	8A	10A	± 3%	120 mV
	-12 V	0.1 A	2 A	2.5 A	3A	± 3%	120 mV
	±5–25 V[4]	0 A	2.5A	3A	3A	± 3%	240 mV max
LPQ153-C	5 V	2 A	15 A	22A	30A	± 2%	50mV
	15 V	0.1 A	4.8 A	6.4A	8A	± 3%	150 mV
	-15 V	0.1 A	1.6 A	2 A	2.4A	± 3%	150 mV
	±5–25 V[4]	0 A	2.5A	3A	3A	± 3%	240 mV max
LPQ154-C	5 V	2 A	15 A	22A	30A	± 2%	150 mV
	12 V	0.1 A	6 A	8A	10A	± 3%	120 mV
	-12 V	0.1 A	2 A	2.5 A	3A	± 3%	120 mV
	24 V	0.5 A	3.5A	4.5A	5A	+10/-5%	240 mV

Drawings

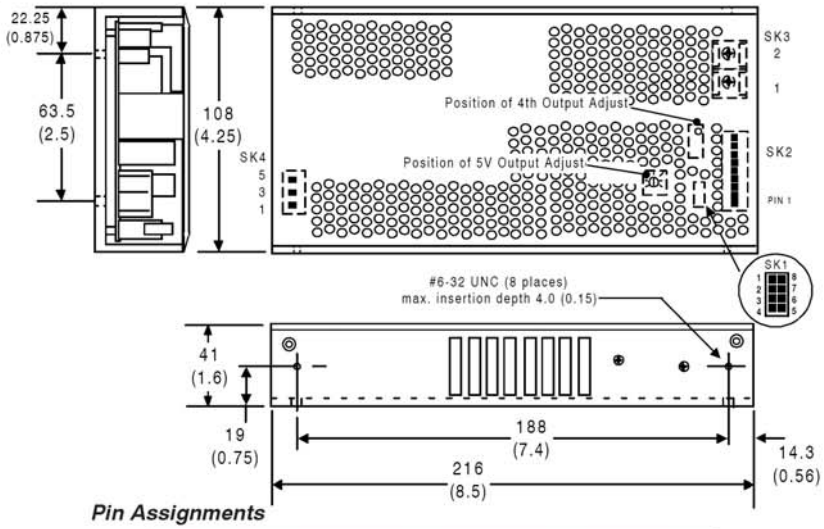

Pin Assignments

Connector	LPQ152-C	LPQ153-C	LPQ154-C
SK1 -1	Inhibit -ve	Inhibit -ve	Inhibit -ve
-2	Inhibit +ve	Inhibit +ve	Inhibit +ve
-3	+12V (Fan)	+15V (Fan)	+12V (Fan)
-4	NC	NC	NC
-5	Common	Common	Common
-6	-Sense	-Sense	-Sense
-7	+Sense	+Sense	+Sense
-8	C share	C share	C share
SK2 -1,2	+12 V	+15 V	+12 V
-3,4,5	Common	Common	Common
-6	-12 V	-15 V	-12 V
-7	Power OK	Power OK	Power OK
-8	+5-25 V	+5-25 V	+24 V
-9	-5-25 V	-5-25 V	Common
SK3 TB-1	Common	Common	Common
TB-2	+5 V	+5 V	+5 V
SK4 -1	Ground	Ground	Ground
-3	Line	Line	Line
-5	Neutral	Neutral	Neutral

Astec Standard Power Europe
Astec House, Waterfront Business Park, Merry Hill, Dudley, West Mids. DY5 1LX, UK.
Tel: +44 (0) 1384 842211 Fax: +44 (0) 1384 843355
Astec France S.A.R.L.
Les Arcades, 424, la Closerie Mont d'Est, 93194 Noisy Le Grand Cedex, France.
Tel: +33 1 4305 8680 Fax:+33 1 4304 6033
Astec Standard Power Germany
Robert-Heil-Str. 8, 36251 Bad Hersfeld, Germany
Tel: +49 (0) 6621 50570 Fax: +49 (0) 6621 505720

Published by ASPE Ref. No. 00265 A

Information contained is this document is confidential, is THOMSON property and cannot be disclosed in whatever form without prior written authorization of THOMSON.

3.9. Control panel (PCL) 45333047

3.9.1. Architecture

The Local Control Panel (PCL) consists of two units:

- an LCD touch screen,
- a display circuit.

It is the principal user interface for the transmitter. It gives the operator the facilities to display the various status conditions of the transmitter and its main sub-units.

3.9.2. Architecture and operational description

There are three push buttons on the PCL (On, Off, Reset). Each command signal from a push button is:

- fed to a set-reset latch circuit to avoid contact bounce; then,
- shaped into a pulse via a timer; and finally,
- sent to a buffer memory which transmits the data pulses to the control system of the transmitter (CPU card).

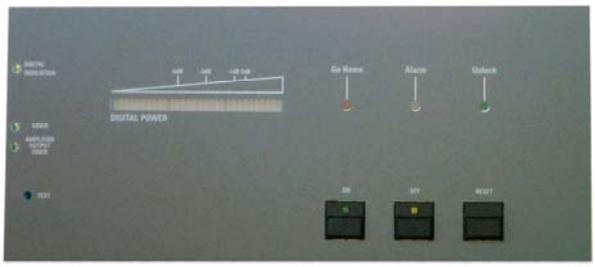

The output power level as measured by a directive probe is displayed on an LED bargraph.

A voltage which is proportional to the measured power value is applied to converters to produce a progressive illumination of the LED bargraph; an illumination of the total length of the bargraph corresponds to the nominal output power.

The values for the output and reflected signals as measured by the probes are sent directly to the control system of the transmitter.

The indicator lamps on the display card indicate transmitter operational status conditions and they are activated by command signals from the control system of the transmitter (CPU).

An RS 232 serial link from the CPU which carries data to and from the LCD screen passes through the display card.

Information contained is this document is confidential, is THOMSON property and cannot be disclosed in whatever form without prior written authorization of THOMSON.

Information contained is this document is confidential, is THOMSON property and cannot be disclosed in whatever form without prior written authorization of THOMSON.

99/363 (f/e)

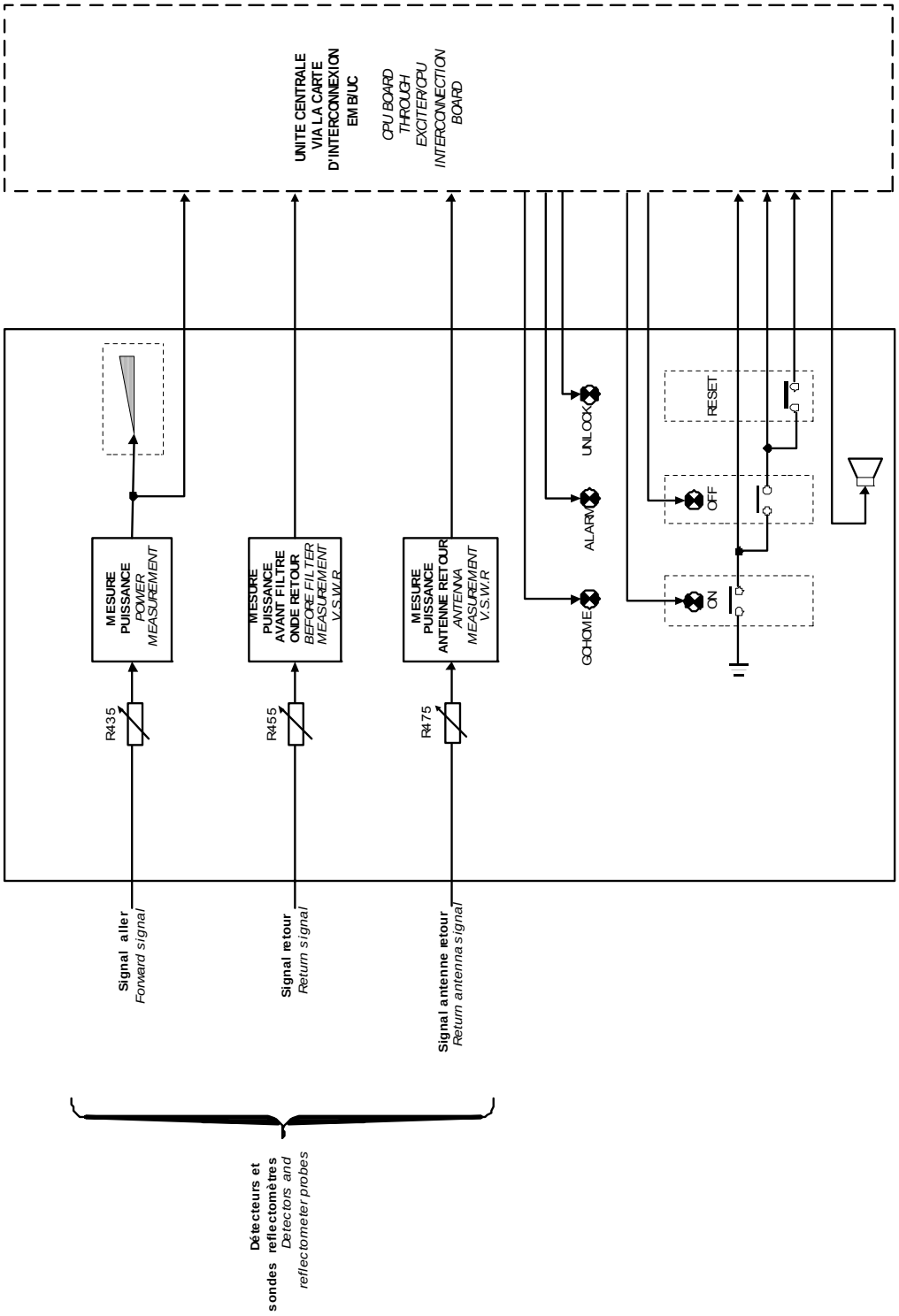

Figure 17 : Bloc diagram display card

3.9.3. Indicator lamps and message displays

There are no status indicator lamps to indicate the status conditions of the display card. The indicator lamps on the front of the PCL indicate the overall status of the transmitter.

3.9.4. Adjustment controls

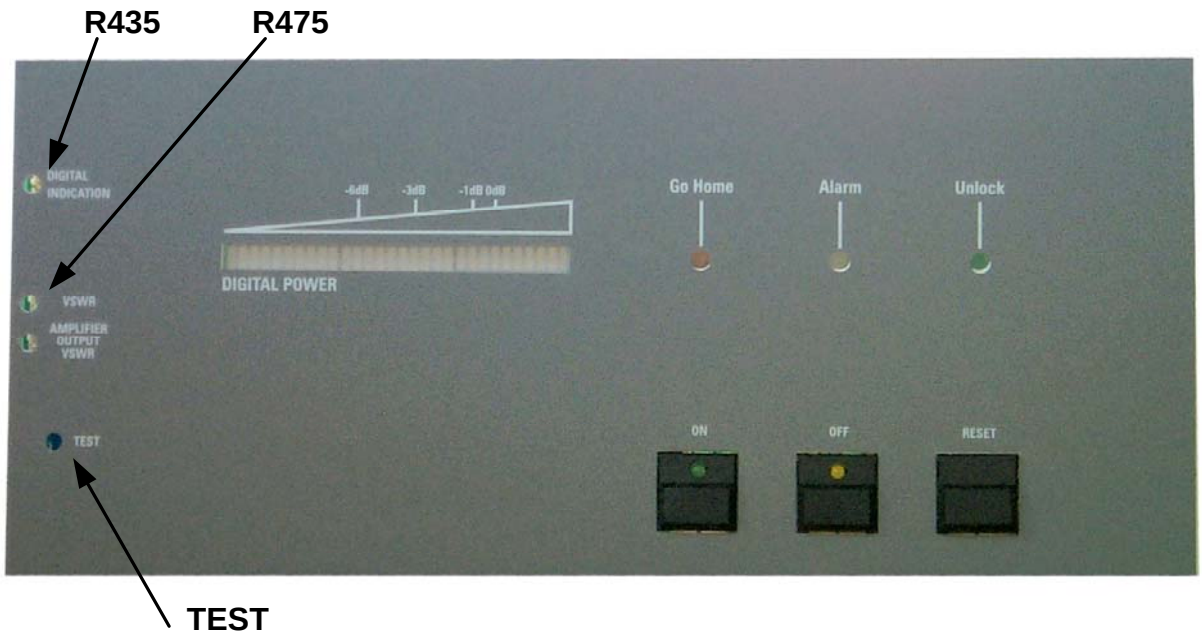

The sensitivity controls on the front of the PCL are used to set the parameters which are displayed by the bar graph on the PCL and in the "RF REFLECTED LEVEL" and "RF LEVEL" windows; these adjustments set the input signals and are as follows :

- R435 “POWER INDICATION” : sensitivity control for output power indication,
- R475 “ANTENNA VSWR” : sensitivity control for antenna SWR indication.

The output power level is displayed on the bargraph.

Return SWR values are displayed on the "RF REFLECTED LEVEL" window.

3.9.5. Test points

Pressing on the "TEST" button on the front panel of the PCL with a pointed object will check that the indicator lamps and bargraph LED’s are working properly.

Information contained is this document is confidential, is THOMSON property and cannot be disclosed in whatever form without prior written authorization of THOMSON.

3.9.6. The display card 45324176

3.9.6.1. Outline

The display card performs the following functions :

- it sends commands to the equipment units,
- it demodulates the monitoring signals received from the directional probes in the RF connections to the transmitter antenna and displays them,
- it acts as the interface between the LCD screen and the transmitter control system.

3.9.6.2. Operational description

Refer to the entitled paragraph « Operational description » of the sub-assembly LOCAL CONTROL PANEL.

3.9.6.3. Indicator lamps

There are no status indicator lamps to indicate the status conditions of the display card. The indicator lamps on the front of the PCL indicate the overall status of the transmitter.

3.9.6.4. Adjustment controls and Test et points

Refer to entitled paragraphs « Adjustment controls » and « Test et points » of the sub-assembly LOCAL CONTROL PANEL.

3.9.6.5. Internal protective devices

The display card has no need of internal protective devices.

3.9.6.6. Connections and data transfer

The display card has the following connectors:

- Connectors for envelope signal from reflectometer probes :
  - connector J1 in case of:
    - analogue transmitter: for sound signal,
    - digital transmitter: not used
  - connector J2 in case of:
    - analogue transmitter: for vision signal,
    - digital transmitter: for RF signal,
  - connector J3, for antenna SWR signal,
  - connector J4 in case of:
    - analogue transmitter: for vision SWR signal (only in case of split channel transmitter) or not used,
    - digital transmitter: for SWR signal

Information contained is this document is confidential, is THOMSON property and cannot be disclosed in whatever form without prior written authorization of THOMSON.

- connector J5 in case of:
  - analogue transmitter: for sound SWR signal (only in case of split channel transmitter) or not used,
  - digital transmitter: not used

♦ Connector J6 which provides :
- the connection with the Central Processing Unit (via the exciter/CPU interconnection card) :
  - the input illumination signals for PCL indicator lamps,
  - the output command signals (On, Off, Reset),
  - input of output and reflected power signal measurement values from the reflectometer probes.
- the connection of the RS 232 serial link for data exchange between the transmitter control system and the PCL touch screen,
- for input power supply to the PCL (display card and screen),

♦ Connector J7 for the RS 232 serial link between the display card and the touch screen (signal data originate in the CPU),

♦ Connector J8 for the +24 V DC input power for the touch screen from the exciter / CPU interconnection card,

♦ Connector J9 which is not used.

3.9.6.7. Input power supplies

The display card is fed with the following supplies:

♦ +5 V DC from the CPU power supply card via the exciter/CPU interconnection card,

♦ +12 V and -12 V DC, with back-ups, from the exciter power supply cards via the exciter/CPU interconnection card.

3.9.6.8. Cooling

The display card does not require a separate cooling system; it is cooled by natural convection.

Information contained is this document is confidential, is THOMSON property and cannot be disclosed in whatever form without prior written authorization of THOMSON.

3.10. The power amplifier, 45323629

3.10.1. Outline

The power amplifier is designed to amplify residual sideband modulated television analogue signals for all standards, and digital signals in DTV.

It is designed to work in UHF transmitters for 650 to 750 MHz.

The power output specification is as follows :

- vision :
  - approximately 2100W peak power at 1 dB compression,
  - 960W rms power with a gain of 63 dB,
- vision plus sound :
  - approximately 2100W peak power,
- peak power of 2100 W, for 570 W RMS approximately with digital signals.

3.10.2. Architecture

The power amplifier consists of the following sub-units :

- protection card and interface,
- class A preamplifier,
- class AB drive amplifier,
- input splitter, 1 x 8 ways,
- final class AB 2100 W amplifier consisting of eight amplifier modules,
- 4 way combiner,
- power supply distribution card,

Figure below shows the positions of the various cards in the power amplifier.

Information contained is this document is confidential, is THOMSON property and cannot be disclosed in whatever form without prior written authorization of THOMSON.

Information contained is this document is confidential, is THOMSON property and cannot be disclosed in whatever form without prior written authorization of THOMSON.

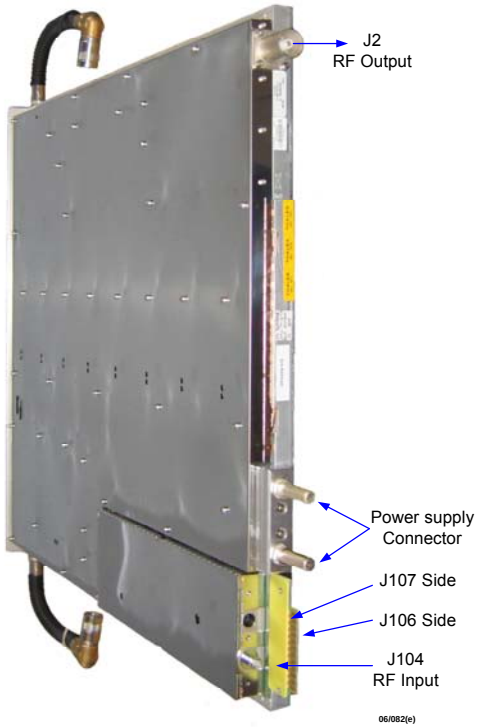

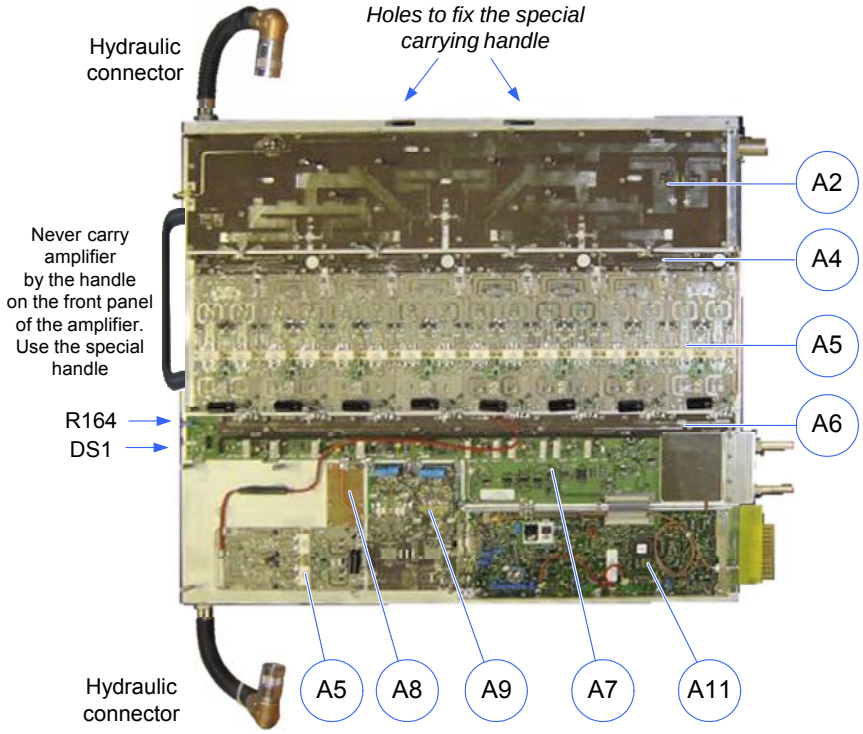

Item	External connections	Item	External connections
A11	Protection & interface board	A7	Power supply distribution board
A2	4 ways combiner	A8	Printed circuit board
A4	2 ways Wilkinson	A9	Class A preamplifier
A5	Class AB amplifier	R164	AGC voltage adjustment
A6	Splitter 8 Ways	DS1	Two-coloured indicator

06/083(e)

Figure 18 : UHF Amplifier 1600W

3.10.3. Operational description

The input RF signal passes through the following stages

- Protection and interface card which provides the following :
  - manual adjustment of gain and phase to equalise for the variations between amplifiers (internal adjustment not accessible to operator),
  - generation of a voltage which is adjustable for automatic gain control (AGC) with reference to a sampling of the RF signal at the combiner unit (adjustment accessible on front panel),

amplifier protection system (see § «Surveillance devices»).

- A class A preamplifier with LDMOS transistors to deliver a minimum power of 20 W at 0.2 dB compression, with a gain G ≥ 37 dB,

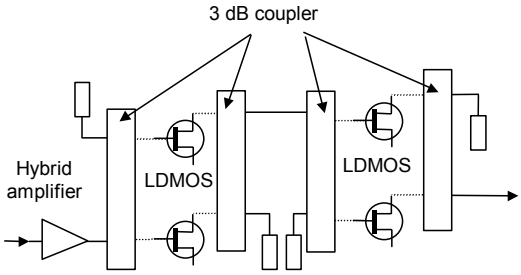

- A class AB drive amplifier with LDMOS transistors to deliver a power of 220W at 1 dB compression, with a gain G ≥ 12 dB at 0.2 dB compression.

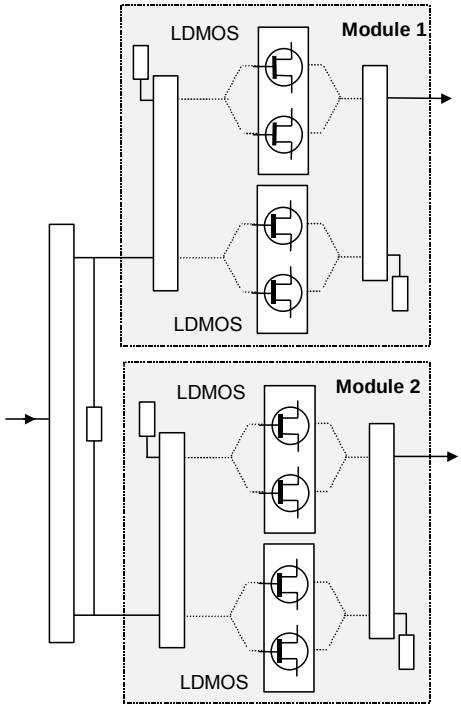

Information contained is this document is confidential, is THOMSON property and cannot be disclosed in whatever form without prior written authorization of THOMSON.

- a 1 x 8 way distribution unit to split the input power from the class AB amplifier into 8 amplifier signals,
- 2100 W amplifier consisting of eight class AB amplifier modules with LDMOS transistors which provides a minimum power of 4 x 570W with a gain of 13 dB at 1 dB of compression,
- a coupling unit which recombines the outputs of the 8 amplifier modules. This coupling unit is a four-way combiner with three directional couplers arranged along the output line. This facilitates the sampling of the output and return power values inside the amplifier. The sample provides the necessary signals for the protection circuits and the amplifier AGC reference signal. The output power sample signal (Pi) is sent to the front panel for monitoring.

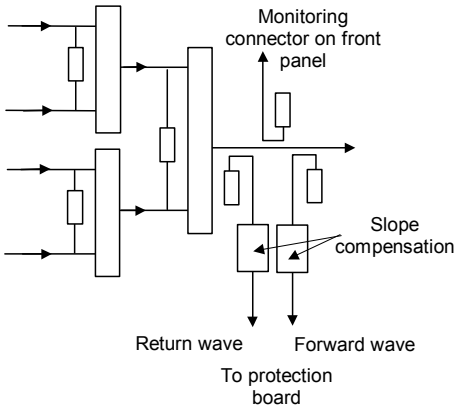

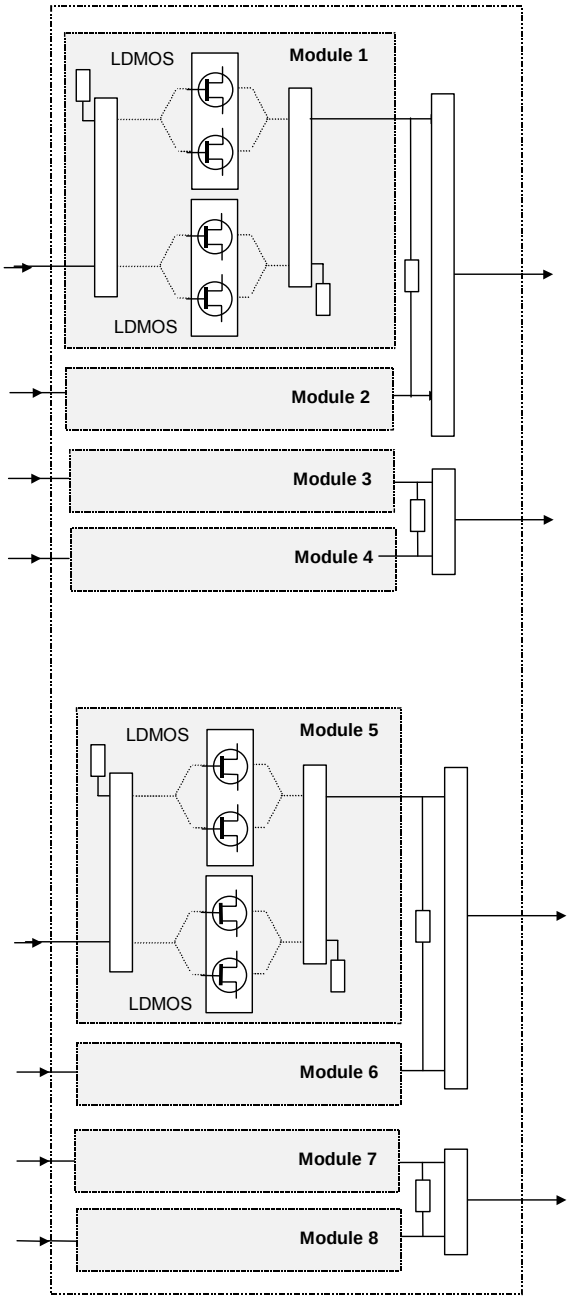

1600W amplifier card

The power supply distribution card provides the following :

- distribution of all power and bias supplies for the various amplifier sub-units,
- the taking of sample measurements of the transistor currents in the amplifier modules. This serves two purposes :
  - the amplifier is provided with a fail-safe protection system,
  - the amplifier currents are measured via the Central Processing Unit.

  These current values are sent to the amplifier protection card.
- the interface for the status LED on the front panel of the amplifier.

Information contained is this document is confidential, is THOMSON property and cannot be disclosed in whatever form without prior written authorization of THOMSON.

Information contained is this document is confidential, is THOMSON property and cannot be disclosed in whatever form without prior written authorization of THOMSON.

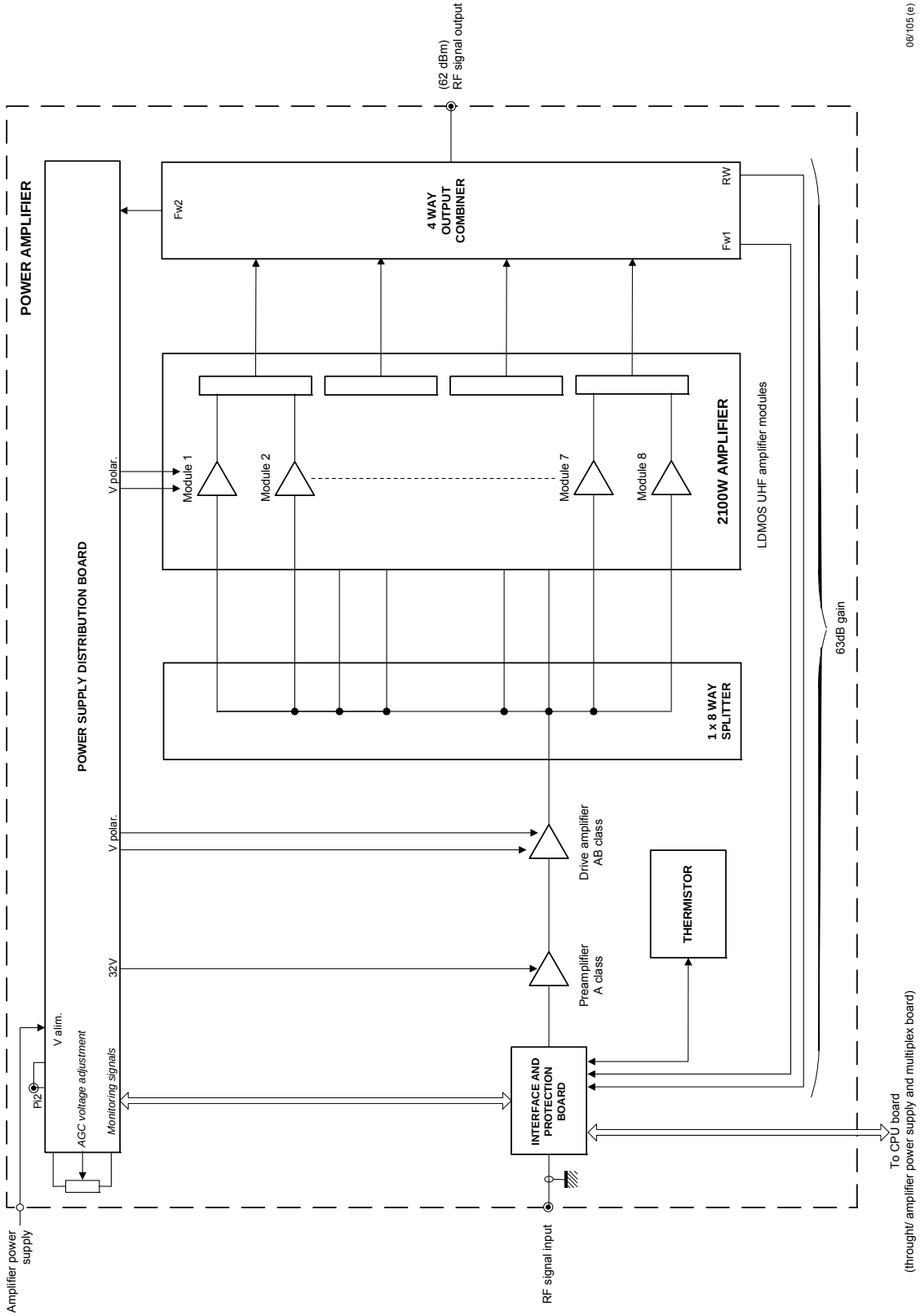

Figure 19 : Block diagram of a power amplifier

3.10.4. Indicator lamps and message displays

- A LED indicator on the front panel of the amplifier card indicates the status of the transmitter as follows :
  - LED extinguished : voltage supply has failed or is ≤ 24V,
  - green LED : amplifier voltage supply is present and it is working satisfactorily,
  - red LED :
    - transistor failure as follows :

      I < 2.4 A for a group of 4 power transistors with polarisation (P input > -4dBm)
    - overdrive (over current or power protection system activated and fault stored : 45 A for 4 double transistors),
    - P input > -4 to -3dBm and P output <250W
    - SWR protection system activated and fault stored (≥ 2),
    - thermal protection system activated and fault stored (air input temperature ≥ 60°C),
  - orange LED : internal power supply absent in the protection system card.

NOTE: The PCL «AMPLIFIERS» window displays the status conditions of a power amplifier as follows :

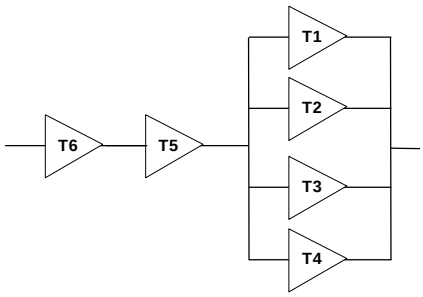

- transistor current values:
  - T1 : amplifier modules 1 and 2,
  - T2 : amplifier modules 3 and 4,
  - T3 : amplifier modules 5 and 6,
  - T4 : amplifier modules 7 and 8,
  - T5 : transistors in class AB drive amplifier,
  - T6 : transistors in class A preamplifier,
- ON,
- general fault,
- SWR fault,
- overdrive fault,
- internal temperature fault,
- presence/absence.

Information contained is this document is confidential, is THOMSON property and cannot be disclosed in whatever form without prior written authorization of THOMSON.