AUDIO ROOF KIT

P/N 2889708; 2889709

BEFORE YOU BEGIN

Read these instructions and check to be sure all parts and tools are accounted for. Please retain these installation instructions for future reference and parts ordering information.

WARNING

The Polaris Audio Roof can affect vehicle handling characteristics due to added weight mounted to top of vehicle. Take extra precautions, such as slower speeds, increased stopping distance, and care taken on inclines when driving with added accessory weight. Failure to observe these precautions may result in vehicle rollover, injury, or death.

APPLICATION

Verify accessory fitment at www.polaris.com.

IMPORTANT

Installation of Audio Roof is not recommended on vehicles equipped with Stage 5 audio, or on Limited Edition audio models, due to risk of excessive battery drain.

REQUIRED SOLD SEPARATELY

Only parts for installation of the Audio Roof Kit are included. For complete installation, the following additional kit is required (sold separately):

- *Dual Battery Kit*, P/N 2884347, 2884391

To install *Audio Roof Kit*, P/N 2889709, on models without Ride Command but with PMX head unit, prior installation of the following additional kit is also required (sold separately):

- *Amplifier Upgrade Kit*, P/N 2884908

KIT CONTENTS

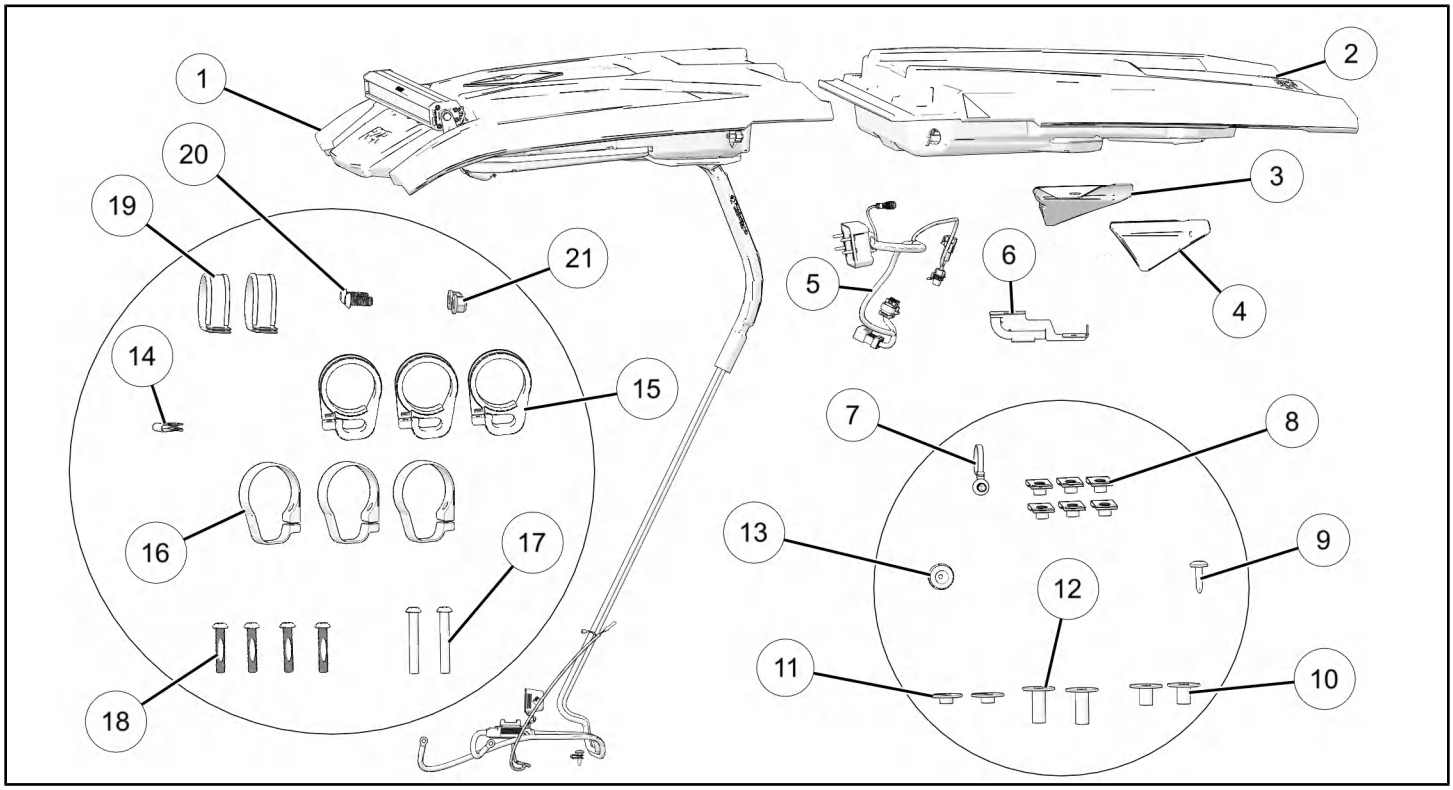

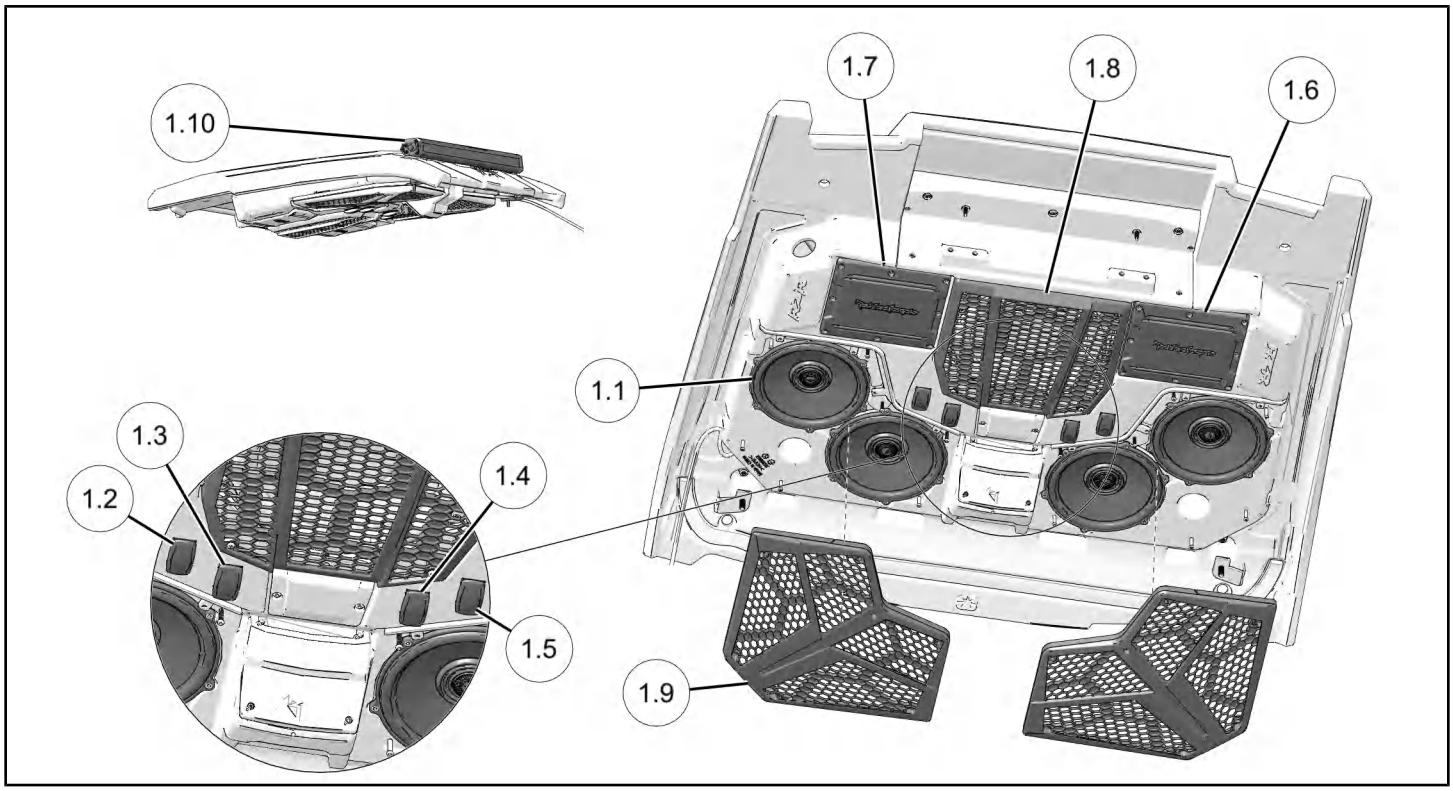

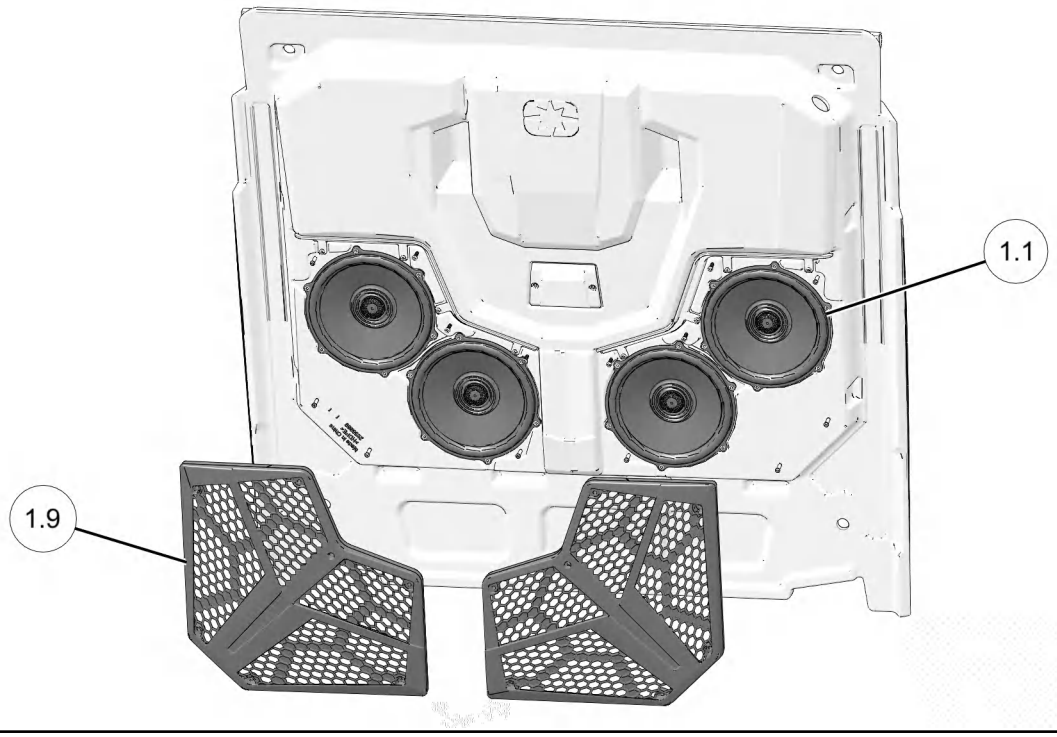

REF	QTY	PART DESCRIPTION	P/N AVAILABLE SEPARATELY	AVAILABLE SERVICE KIT
1	1	Front Audio Roof, Multi-Passenger, PMX (P/N 2889708) Front Audio Roof, Multi-Passenger, Ride Command (P/N 2889709)	n/a	n/a
1.1	4	-Speaker, 8 in, 4 Ohm	2416579	n/a
1.2	1	-Switch, Audio Roof, Power	4080885-01	n/a
1.3	1	-Switch, Audio Roof, Accent	4080885-02	n/a
1.4	1	-Switch, Audio Roof, Dome	4080885-03	n/a
1.5	1	-Switch, Audio Roof, Lightbar	4080885-04	n/a
1.6	1	-Amplifier Assembly	2416580	n/a
1.7	1	-Amplifier Assembly	2638886	n/a
1.8	1	-Grill, Subwoofer, Audio Roof	5459321	n/a
1.9	2	-Grill, Speaker, Audio Roof	5459322	n/a
1.10	1	-Lightbar, 33 in, Audio Roof	2416581	n/a
2	1	Rear Audio Roof	n/a	n/a
3	1	Rain Wing, Left	n/a	n/a
4	1	Rain Wing, Right	n/a	n/a
5	1	Ride Command Adapter Harness (P/N 2889709 only)	n/a	2211831
6	1	Routing Bracket	n/a	n/a

REF	QTY	PART DESCRIPTION	P/N AVAILABLE SEPARATELY	AVAILABLE SERVICE KIT
7	1	Cable Tie	n/a	2209600
8	6	U-Nut M8 x 1.25 mm	n/a	2209600
9	1	Screw, Torx® Pan Head M6 x 1.0 x 25 mm	n/a	2209600
10	2	Top Hat Spacer, Mid	n/a	2209600
11	2	Top Hat Spacer, Short	n/a	2209600
12	2	Top Hat Spacer, Tall	n/a	2209600
13	1	Grommet	n/a	n/a
14	1	U-Nut M6 x 1.0 mm	n/a	2209600
15	3	Wire Clamp with Gasket	n/a	2209600
16	3	Wire Clamp	n/a	2209600
17	2	Screw, Torx® Pan Head M8 x 1.25 x 55 mm	n/a	2209600
18	4	Screw, Torx® Pan Head M8 x 1.25 x 40 mm	n/a	2209600
19	2	Clamp – Rear Windshield Support	n/a	2209600
20	2	Screw, Pan Head M8 x 1.25 x 16 mm	n/a	2209600
21	2	Nut, Hex M8 x 1.25 mm	n/a	2209600

HARNESS DETAIL

RIDE COMMAND ADAPTER HARNESS ⑤

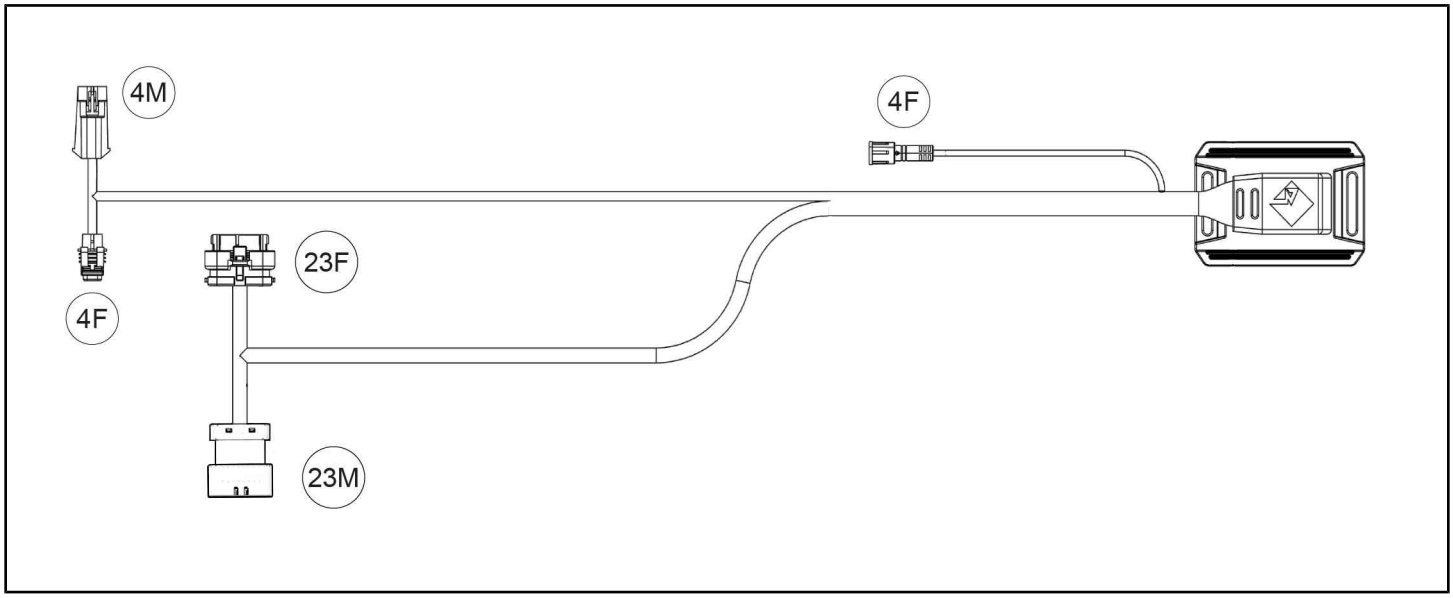

REF	PART DESCRIPTION	CONNECTS TO
4F	Amplifier Connector	Amplifier
4F	Audio Roof Module Connector	Audio Roof Module
4M	Ride Command Harness Connector	Ride Command Harness
23F	Amplifier Connector	Amplifier

REF	PART DESCRIPTION	CONNECTS TO
23M	Ride Command Harness Connector	Ride Command Harness
Example: 16F = 16 pin, Female / 16M = 16 pin, Male (Male terminal fits inside female terminal)		

TOOLS REQUIRED

- Safety Glasses
- Drill
- Drill Bit:
  - 1/4 in (6 mm)
- Pliers, Side Cutting
- Pry Tool
- Push Dart (Panel Clip) Tool
- Socket Set, Hex Bit, Metric
- Socket Set, Torx® Bit
- Wrench Set, Metric
- **Special Service Tool:**
  - Non-marring Pry Tool, P/N 5456907 (or equivalent)

IMPORTANT

Your Audio Roof Kit is exclusively designed for your vehicle. Please read the installation instructions thoroughly before beginning. Installation is easier if the vehicle is clean and free of debris. For your safety, and to ensure a satisfactory installation, perform all installation steps correctly in the sequence shown.

INSTALLATION INSTRUCTIONS

VEHICLE PREPARATION

GENERAL

1. Park vehicle on a flat surface.
2. Shift vehicle into PARK.
3. Turn key to OFF position and remove key.
4. Remove any existing roof accessories.
5. If not already installed, install *Dual Battery Kit*, P/N 2884347, 2884391

FRONT SEAT REMOVAL

1. Pull up on lever, located below front of seat.

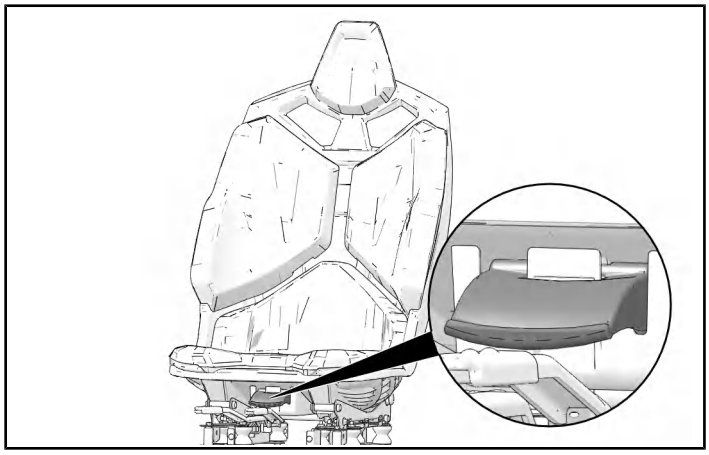

2. Tilt seat assembly forward and pull back slightly to disengage from receiver tube and remove seat from vehicle.

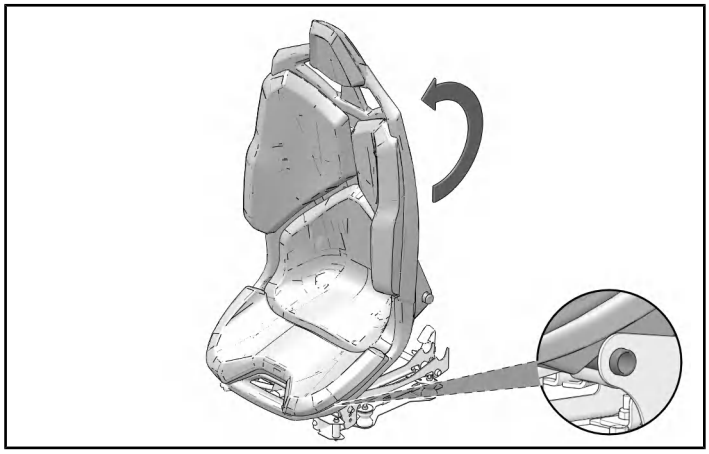

BATTERY DISCONNECT

1. Remove and keep battery terminal and washer to remove negative battery cable (black).

NOTICE
If vehicle is equipped with Dual Battery Kit, disconnect negative battery cable from both batteries.

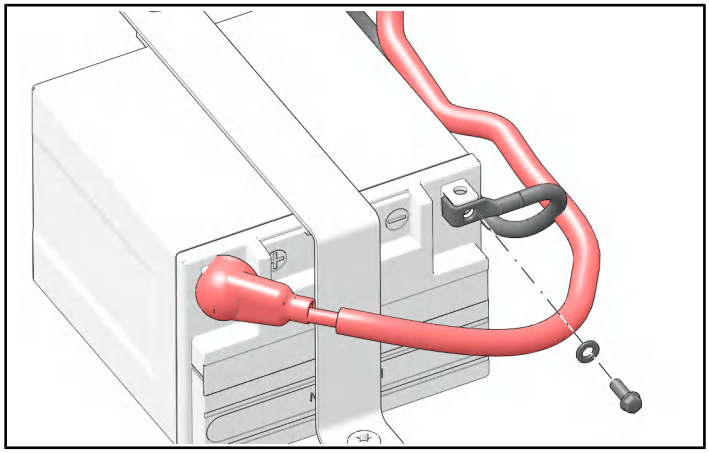

KIT P/N 2889709 INSTALLATION ONLY

CENTER HOOD PANEL REMOVAL

1. Remove and keep two hood fasteners. Move hood towards rear of vehicle to remove.

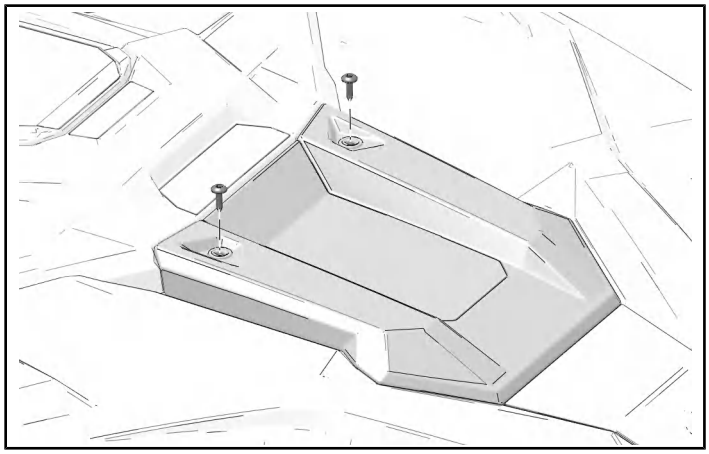

DASHBOARD STORAGE REMOVAL

1. Open center dashboard storage compartment.

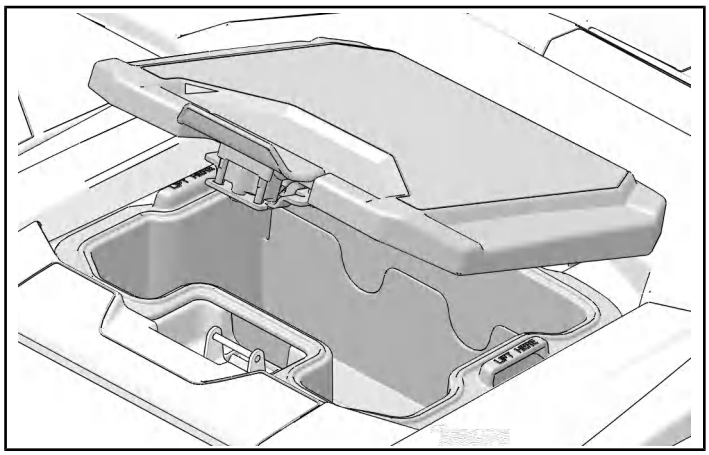

2. Remove storage compartment from dashboard.

TIP
If removing storage compartment is difficult, carefully use tool to pry storage compartment upwards where marked “LIFT HERE.”

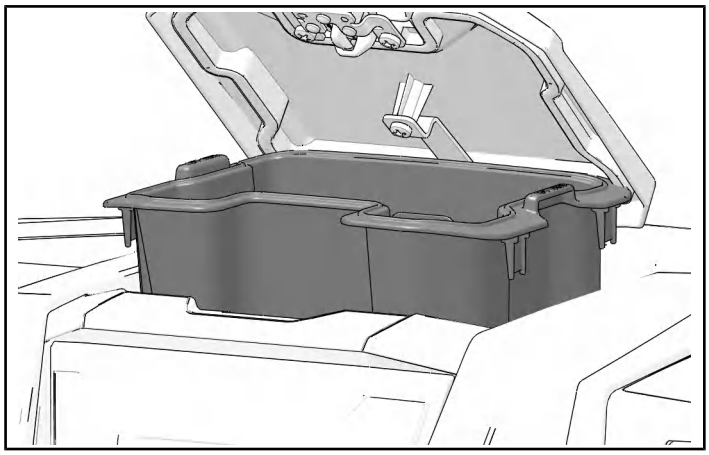

DASHBOARD TOP REMOVAL

1. Carefully pull up to remove left, center, and right dashboard trim pieces.

TIP
Release steering tilt lock for improved access.

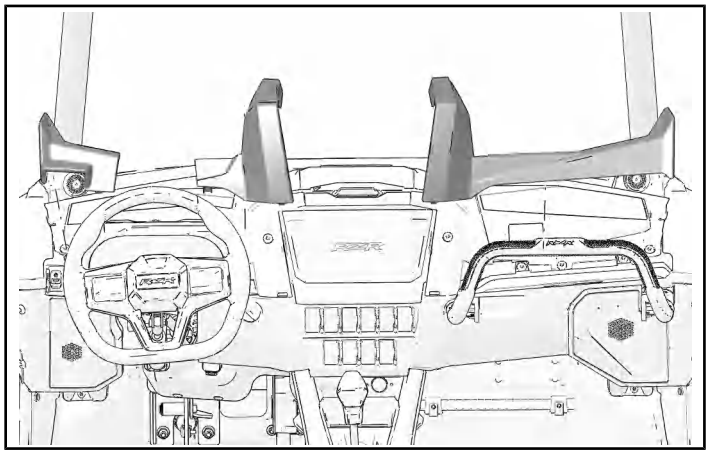

2. Open glove box lid. Remove and keep four dashboard fasteners around glove box opening.

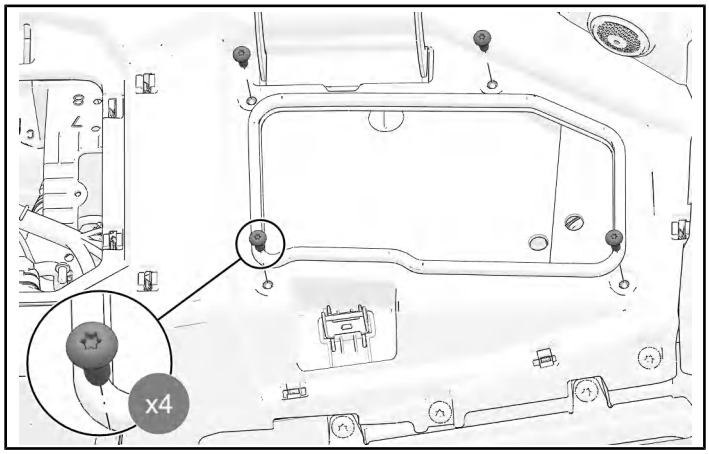

3. Remove and keep three front dashboard fasteners around glove box opening.

TIP
Make note of different screw sizes in steps 2 and 3.

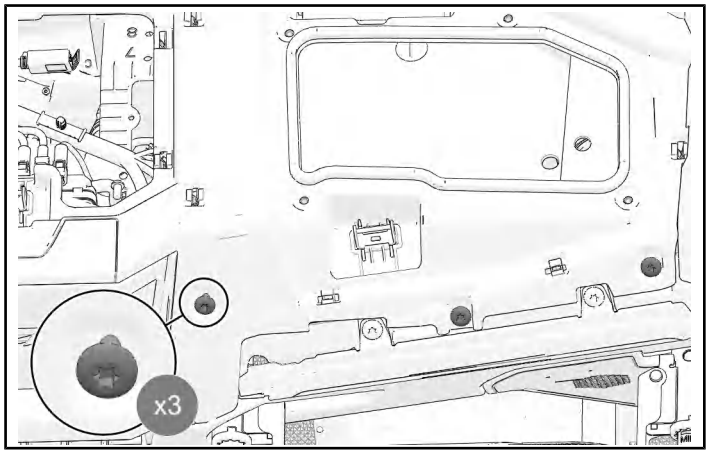

4. Tilt steering wheel down. Remove and keep four dashboard fasteners from dashboard surrounding steering wheel.

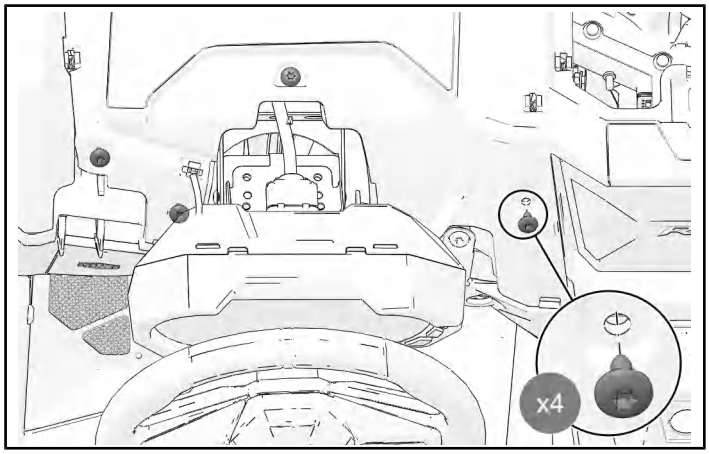

5. Remove and keep two dashboard fasteners from front of vehicle.

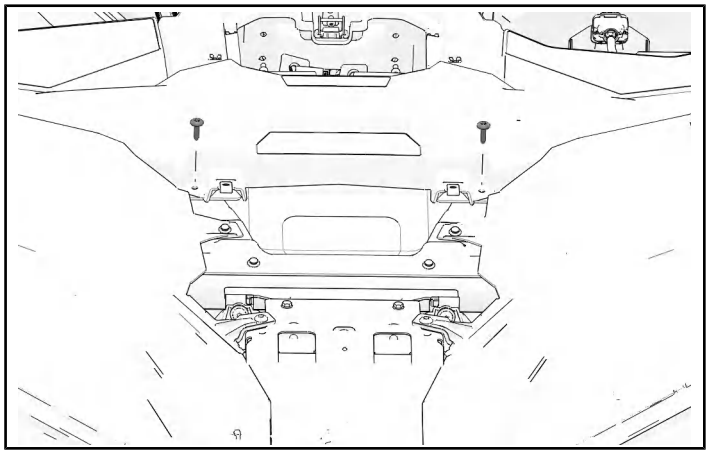

6. Remove and keep two push-pin rivets from front side hood panels.

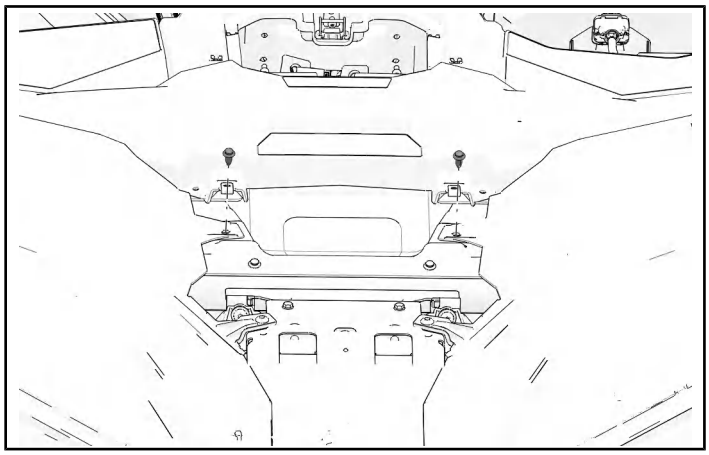

7. Carefully lift edge of left front hood panel to release tab from dashboard top as shown.

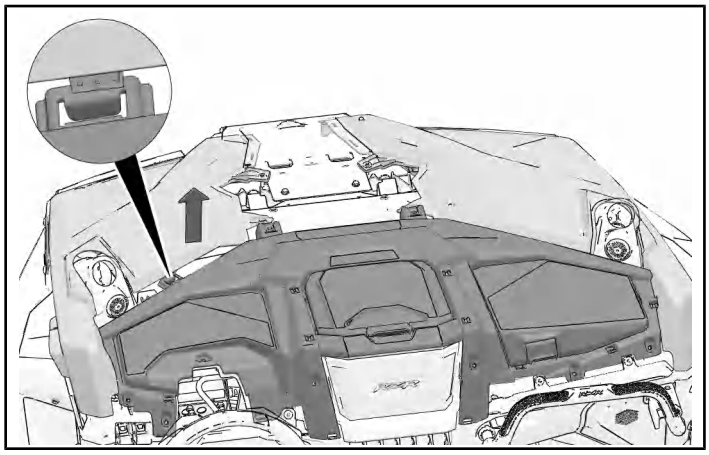

8. Carefully lift edge of right front hood panel to release tab from dashboard top as shown.

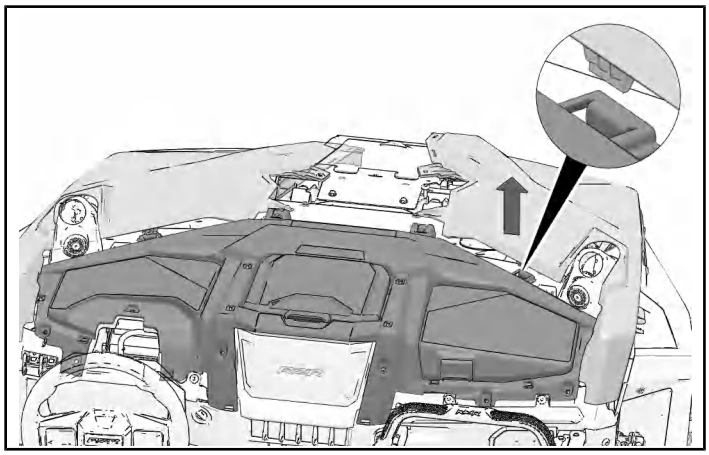

9. Carefully keep panels up-and-away from tabs and remove dashboard top by tilting rear section up and pulling out toward rear.

TIP
Two people are recommended to complete this step.

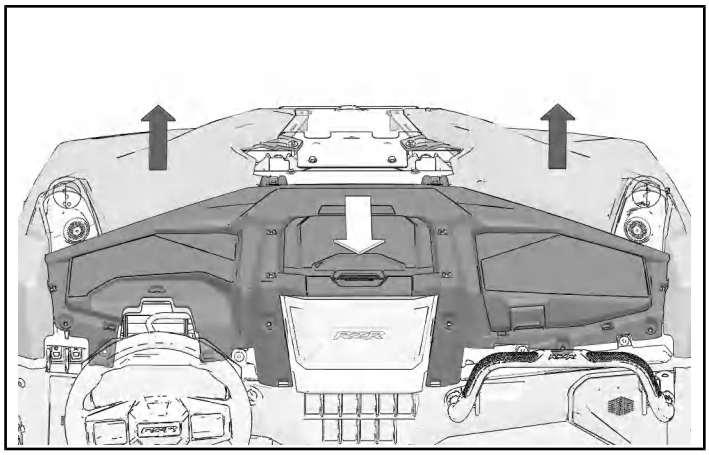

ACCESSORY INSTALLATION

RIDE COMMAND ADAPTER HARNESS INSTALL (P/N 2889709 ONLY)

1. Install Ride Command adapter harness ⑤ module on firewall in front of steering wheel. Use four screws (included) to attach module to firewall. Torque screws to specification.

TORQUE
Module Screws: **27 in-lbs (3 N·m)**

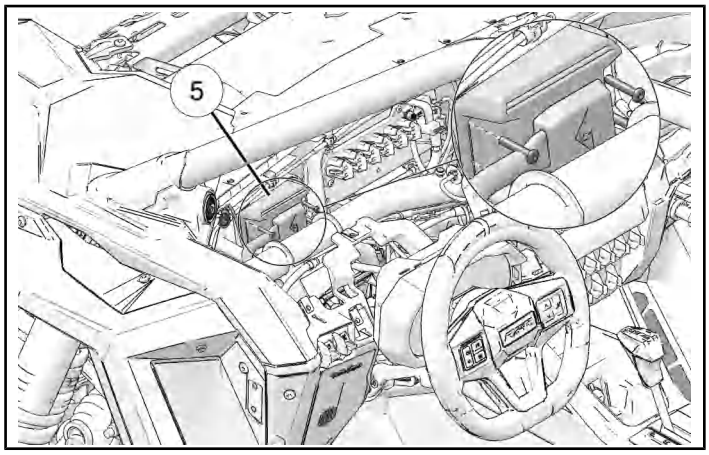

2. Find amplifier in front of Ride Command head unit.

NOTICE
Accessory mounting tray hidden for clarity.

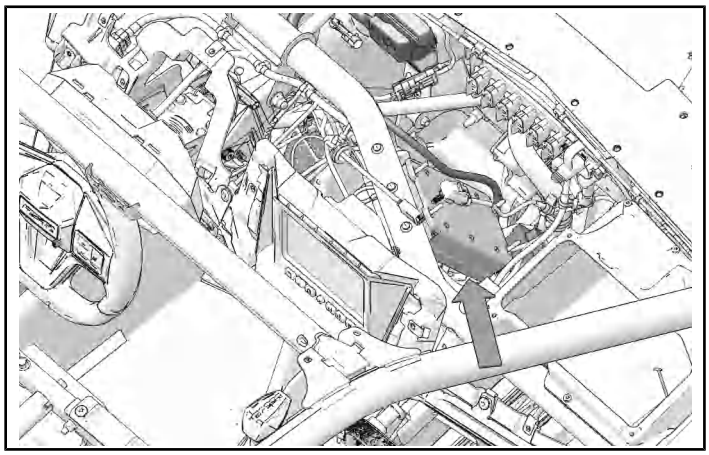

3. Disconnect existing connector from amplifier. Install connector **23F** of harness ⑤ to amplifier. Connect connector **23M** to existing connector that was removed from amplifier.

NOTICE
Accessory mounting tray hidden for clarity.

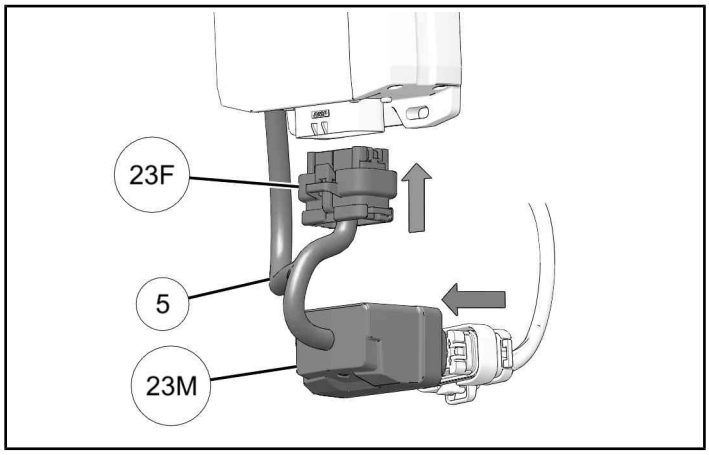

4. Identify 4-pin connector on passenger side of amplifier. Remove plug or subwoofer connector from 4-pin connector. Install connector **4M** of harness ⑤ to 4-pin connector. Install plug or subwoofer connector to connector **4F** of harness ⑤.

NOTICE
Accessory mounting tray hidden for clarity.

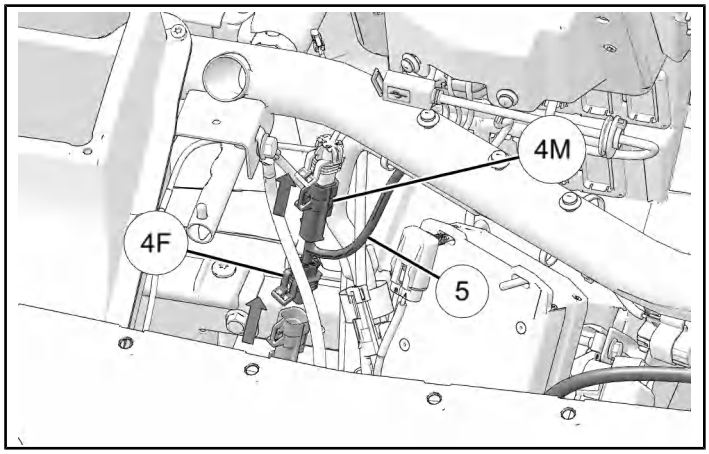

REAR PANEL CLAMP INSTALL (VEHICLES WITH REAR PANEL ONLY)

IMPORTANT
On vehicles equipped with rear panel, installation of clamps will help support top of rear panel in order to control direction of water run-off.

1. Install clamps ⑲ at rear of ROPS as shown. Use clamps to identify locations for holes to be drilled in rear panel.

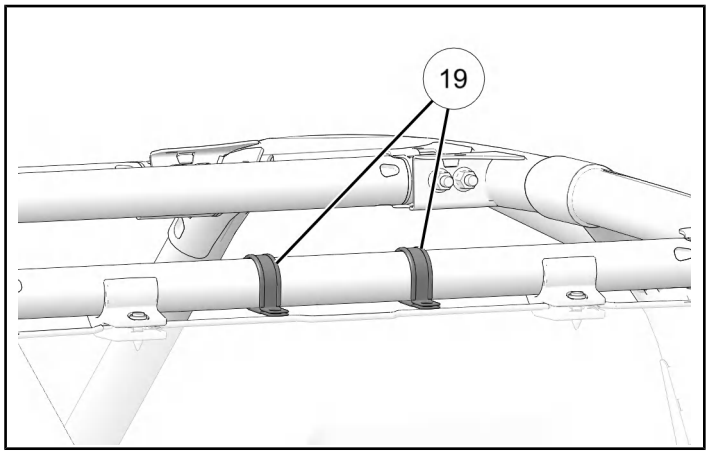

2. Drill hole at each clamp location.

MEASUREMENT
Drill Bit Size: 3/8 in (9 mm)

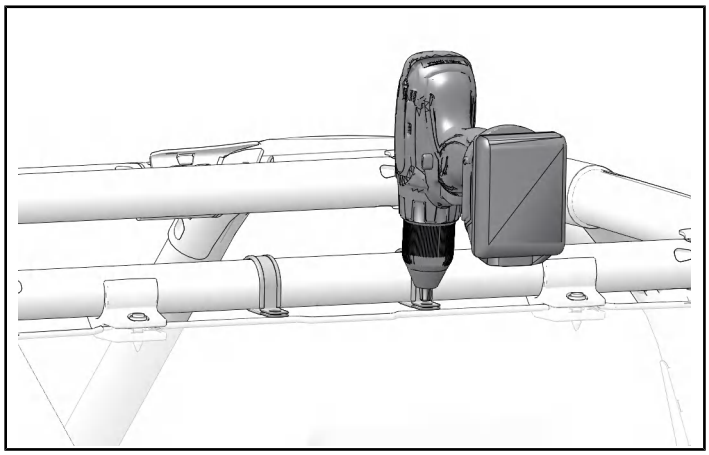

3. Install screw ⑳ and nut ㉑ in each hole to fasten clamp to rear panel. Torque nut ㉑ to specification.

TORQUE
Nuts ㉑: **88 in-lbs (10 N·m)**

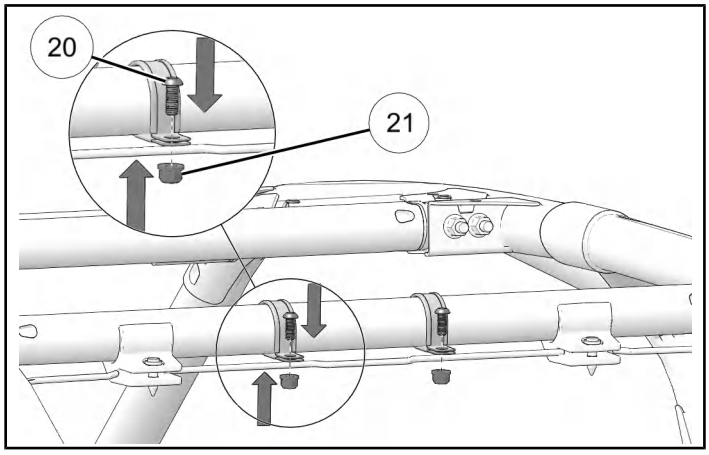

AUDIO ROOF INSTALL

1. Install six U-nuts ⑧ on ROPS gussets.

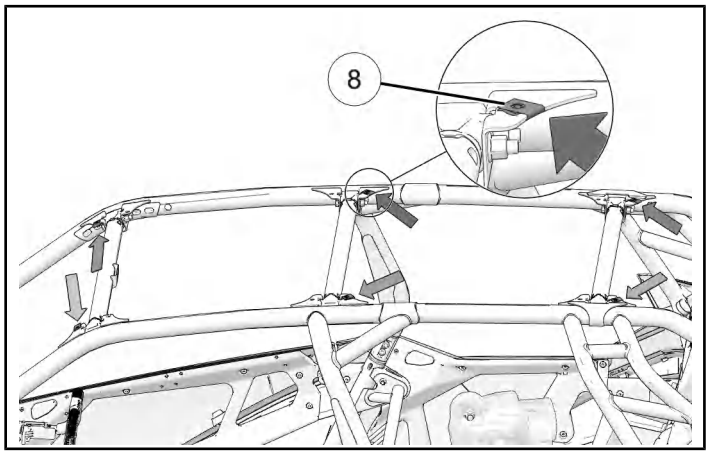

2. Set rain wings ③ ④ in place.

NOTICE
Left side shown; right side similar.

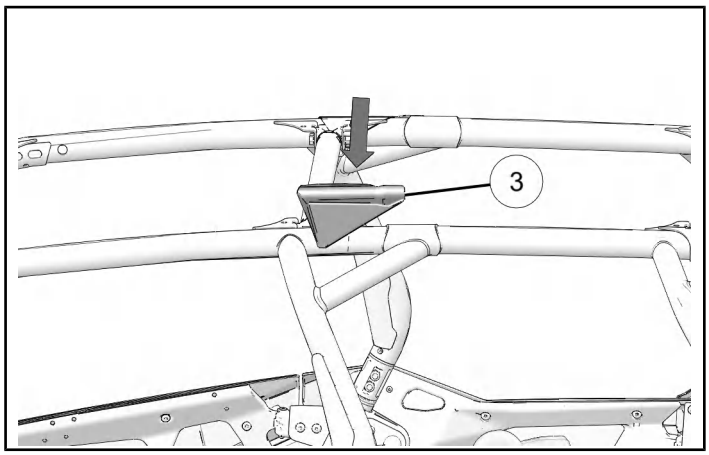

3. Place rear roof ② on ROPS.

NOTICE
Use caution to avoid pinching harness from rear roof.

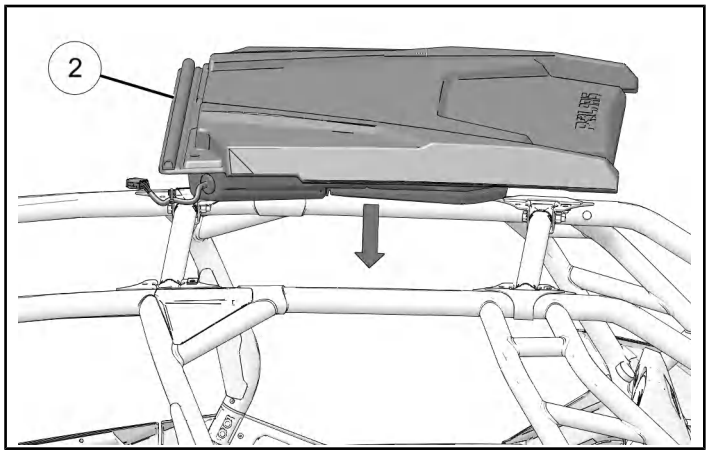

4. Place front roof ①.

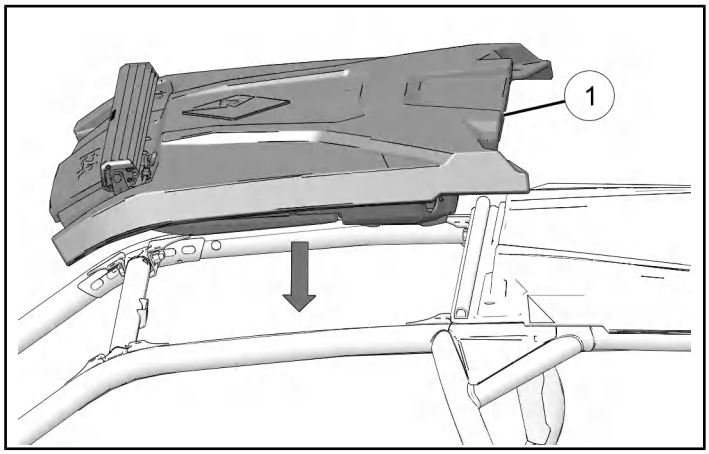

DECODE HARNESS INSTALL (P/N 2889709 ONLY)

1. Find cover at base of drivers side A-pillar. Pull cover and speaker up the A-pillar to access hole at base of A-pillar. Disconnect speaker harness.

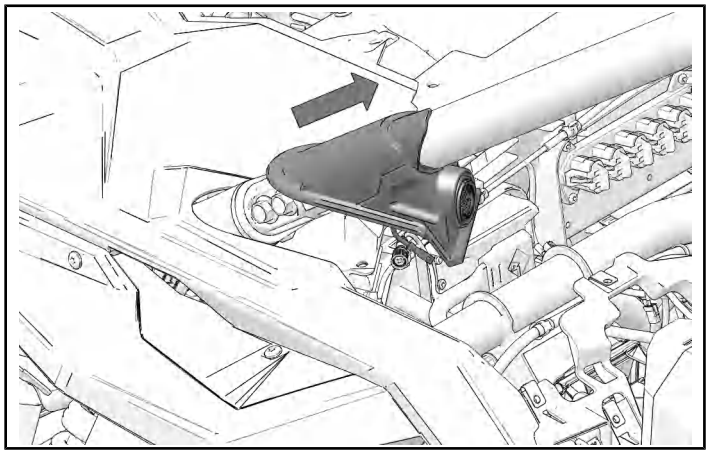

2. Lift drivers side of roof ①. Insert decode harness through the hole in ROPS above drivers seat.

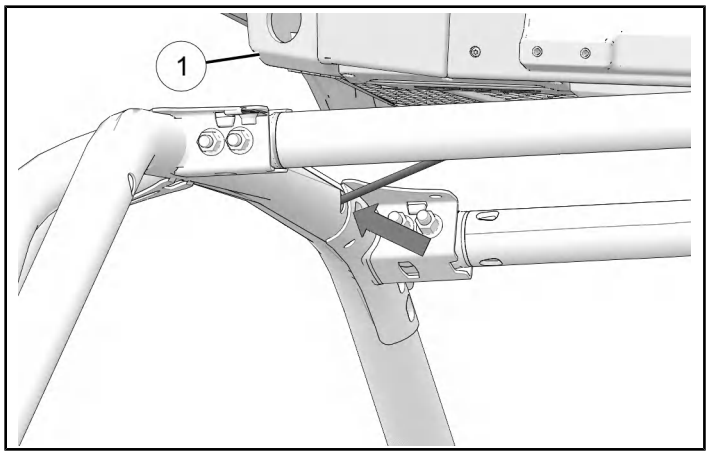

3. Route decode harness down vehicle A-pillar until harness can be pulled through hole a bottom of A-pillar.

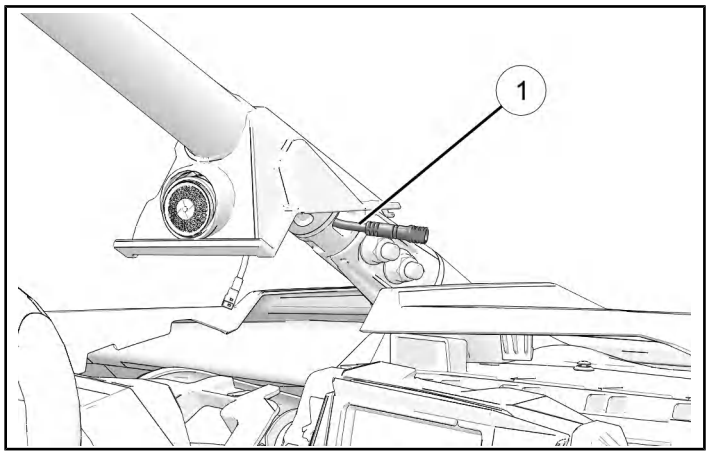

4. Install grommet ⑬ in ROPS hole.

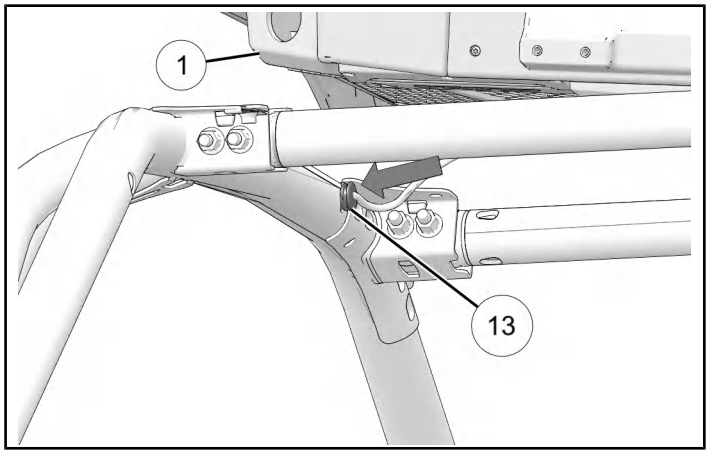

5. Connect decode harness to connector on Ride Command adapter harness ⑤.

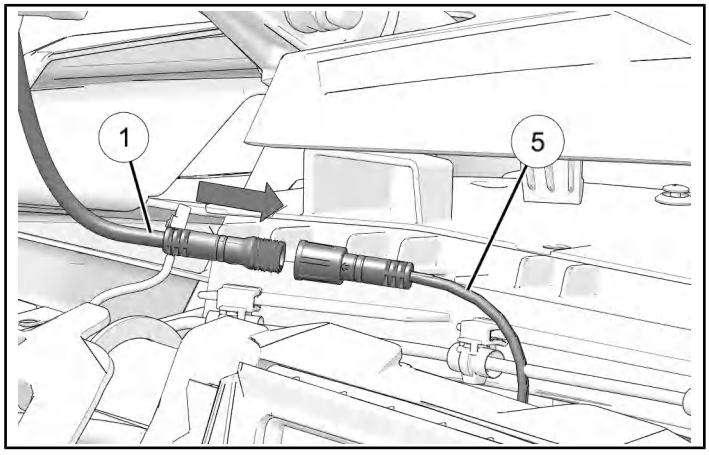

6. Push cover and speaker back into proper location. Reconnect speaker harness.

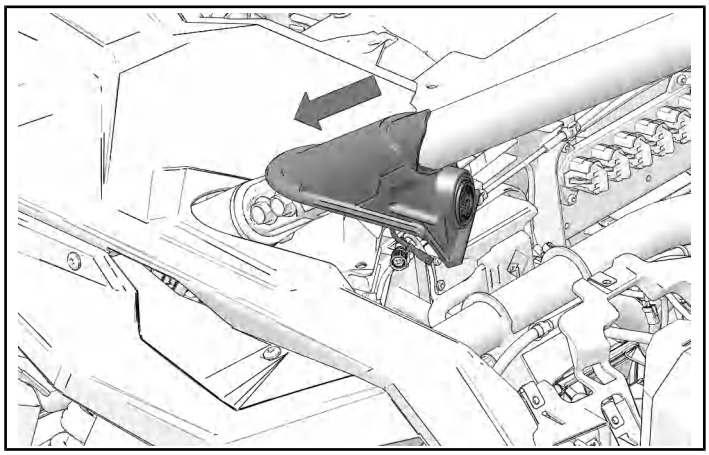

ROOF HARDWARE INSTALL

1. Connect harness from rear roof to front roof. Attach harness clip to ROPS.

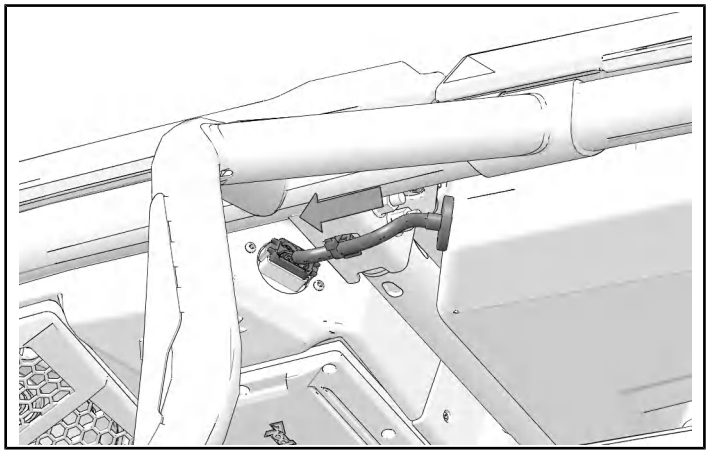

2. Install two mid-length top hat spacers ⑩ in front roof mounting holes.

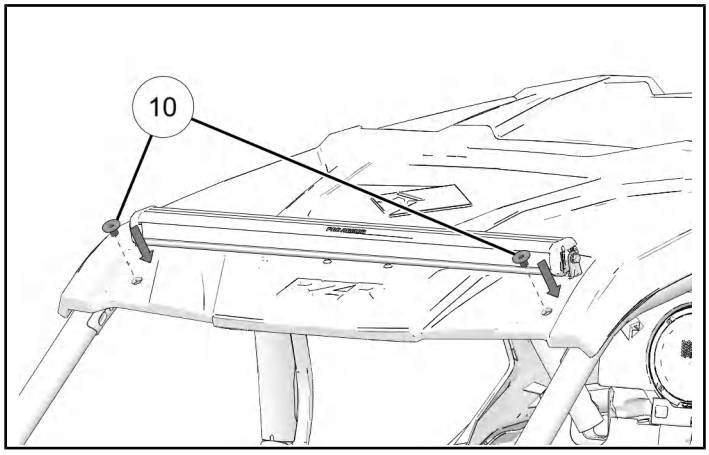

3. Install two tall top hat spacers ⑫ in middle roof mounting holes.

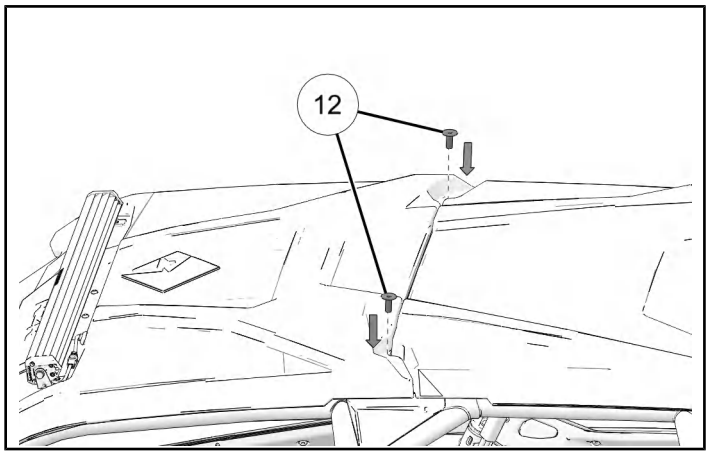

4. Install two short top hat spacers ⑪ in rear roof mounting holes.

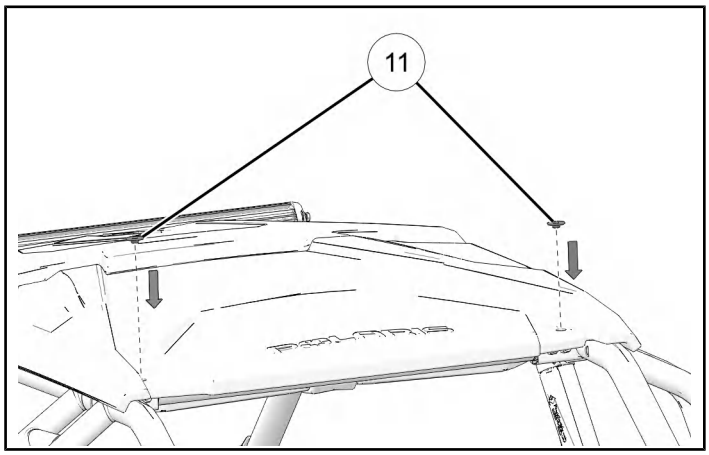

5. Loosely install four roof screws ⑱ in front and rear mounting holes. Loosely install two roof screws ⑰ in middle mounting holes.

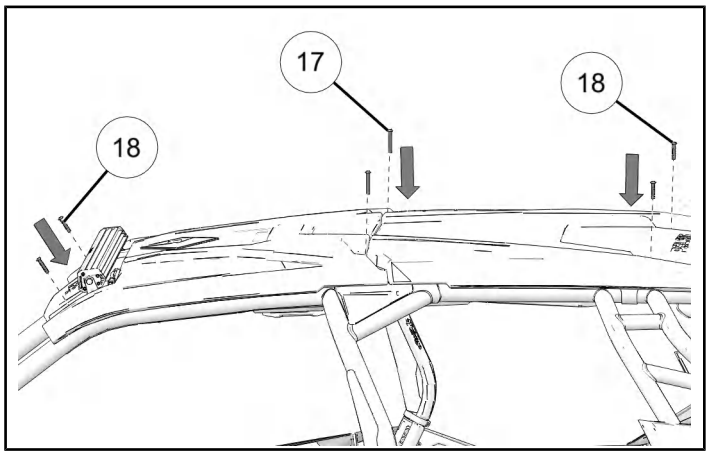

6. Torque roof screws ⑰ ⑱ to specification.

TORQUE
Screws ⑰ ⑱: **20 ft-lbs (27.5 N·m)**

MAIN HARNESS INSTALL

NOTICE
Keep all cable ties and clamps loose until harness is fully routed and connected to battery.

1. Attach main harness ① to ROPS behind front passenger door. Use three wire clamps ⑯, as shown.

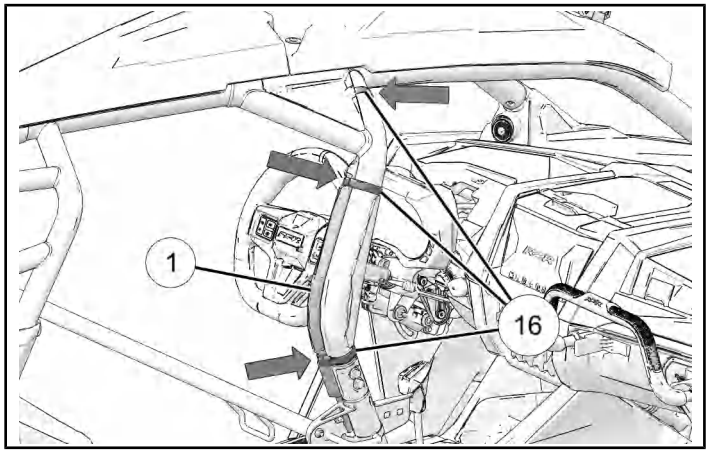

2. Continue routing harness ① down lower bar behind front passenger door. Attach harness to bar using three wire clamps with gaskets ⑮, as shown.

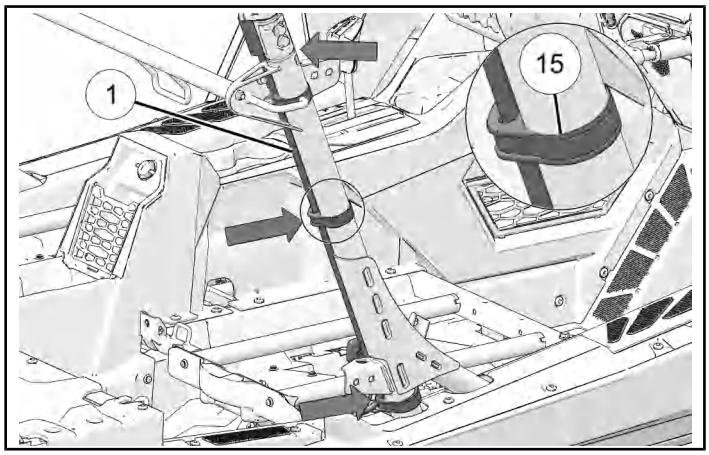

3. Remove existing screw from underseat area.

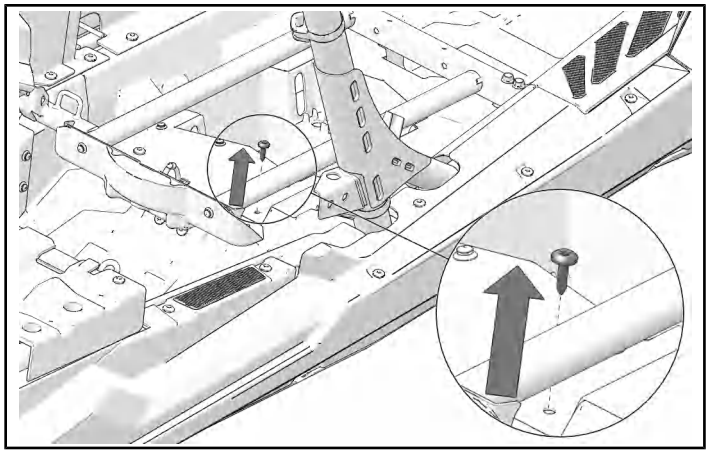

4. Loosely install routing bracket ⑥ using screw removed in previous step.

DO NOT torque fasteners at this time.

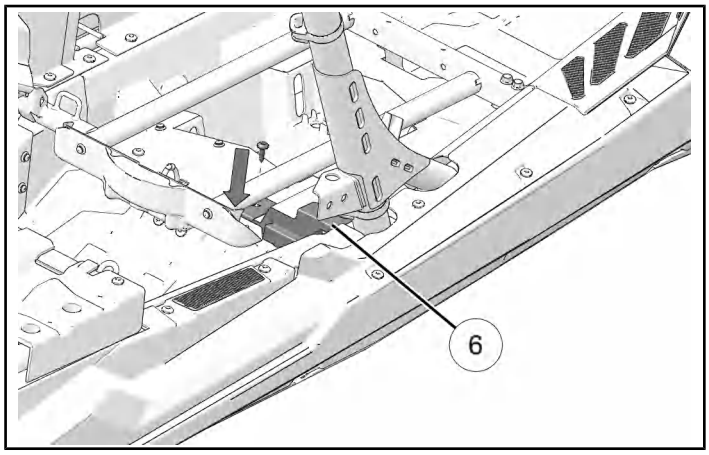

5. Mark location of second hole in routing bracket ⑥. Remove bracket.

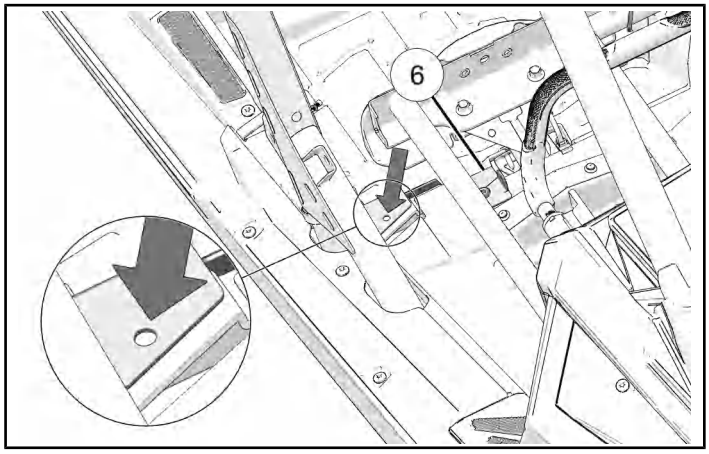

6. Drill hole at marked location.

MEASUREMENT
Drill Bit: 1/4 in (6 mm)

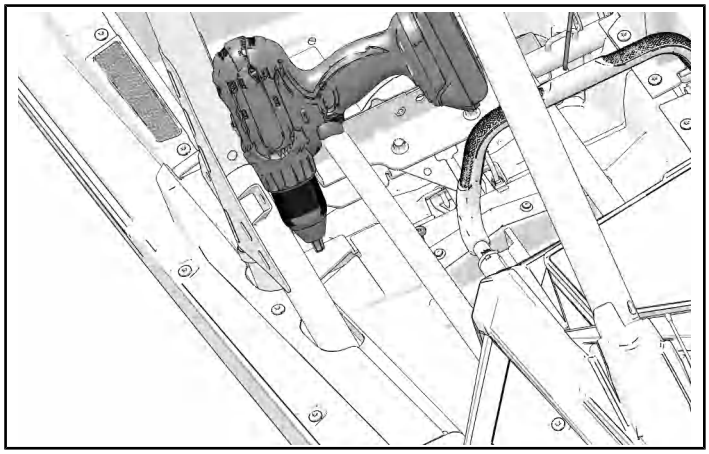

7. Install U-Nut ⑭ at hole location.

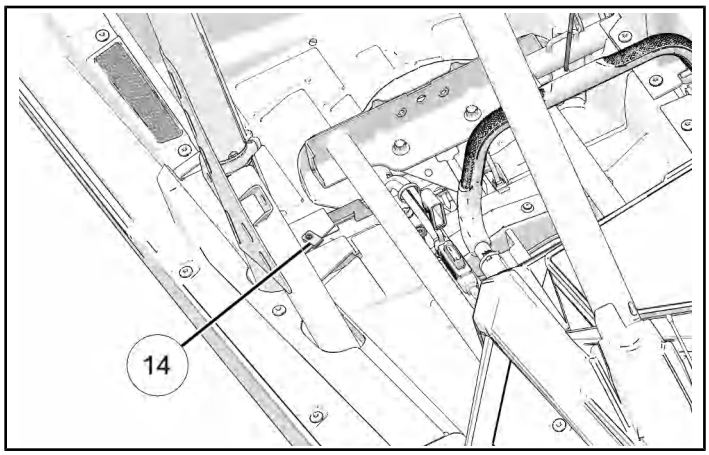

8. Route harness ① on bracket ⑥. Attach with cable tie ⑦.

NOTICE
Parts hidden for clarity.

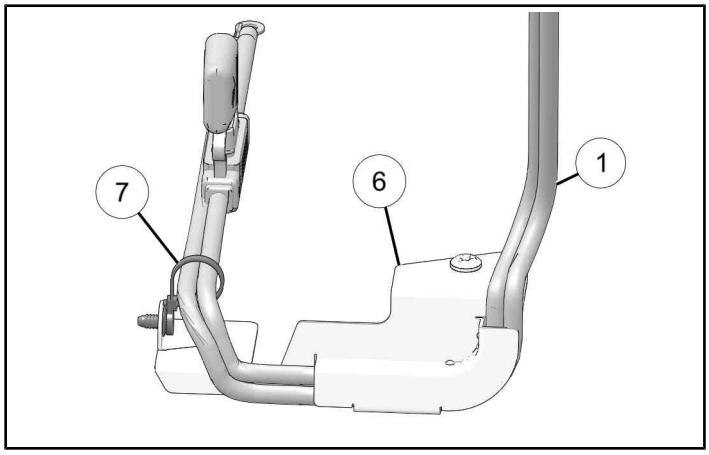

9. Install routing bracket ⑥ using existing screw and screw ⑨.

TORQUE
Bracket Screws: **88 in-lbs (10 N·m)**

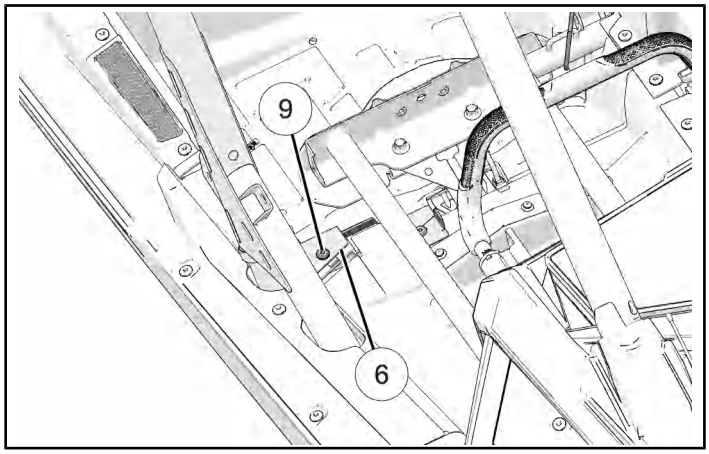

10. Connect harness ① to battery.

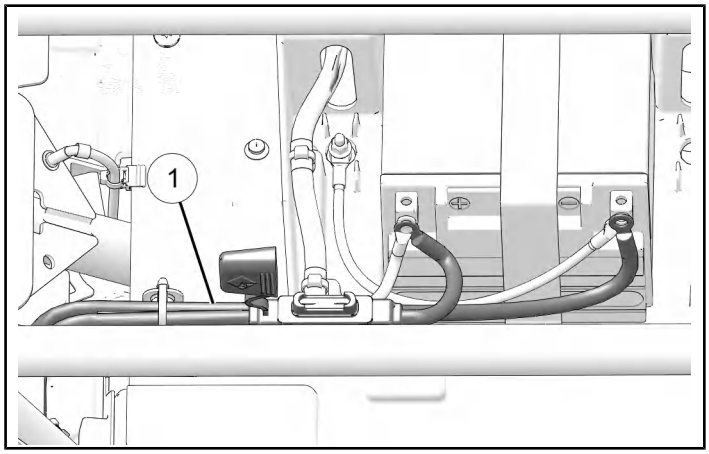

11. Route remaining wire from harness ① through opening to center console.

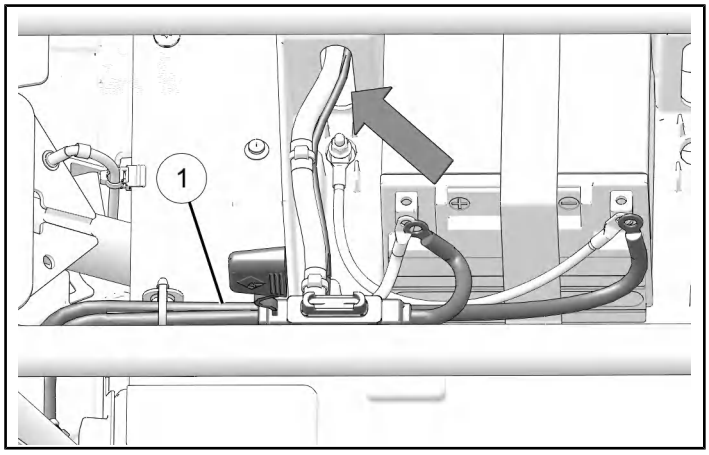

12. Remove cover from rear of center console.

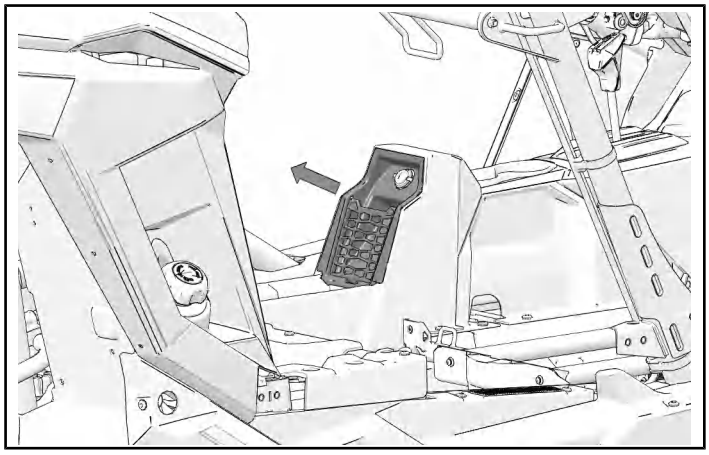

13. Find wiring to power point inside console. Disconnect orange wire from power point.

NOTICE
Parts hidden for clarity.

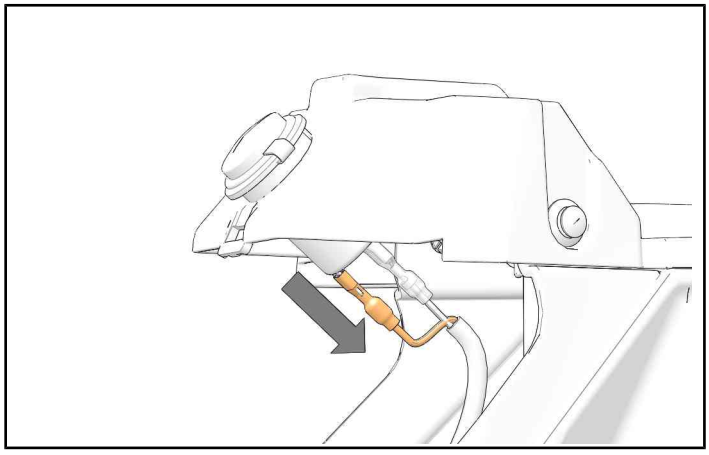

14. Connect red wire from auxiliary harness to power point. Connect orange wire to remaining wire on accessory harness.

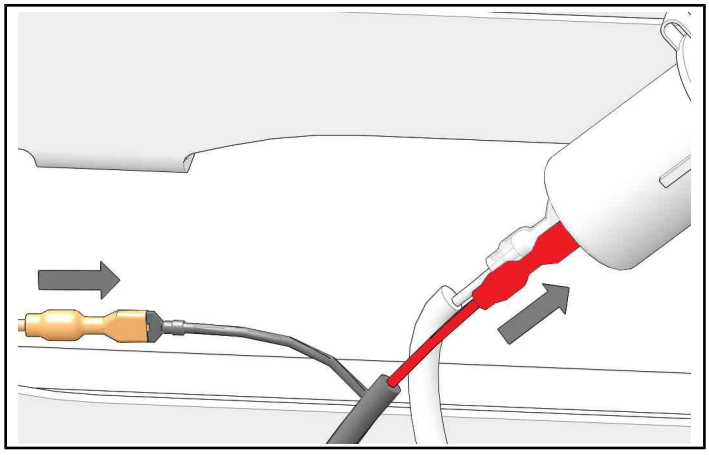

15. Replace console cover.

VEHICLE REASSEMBLY

FRONT SEAT INSTALLATION

1. Tilt seat towards steering wheel and hook seat base onto front receiver tubes.

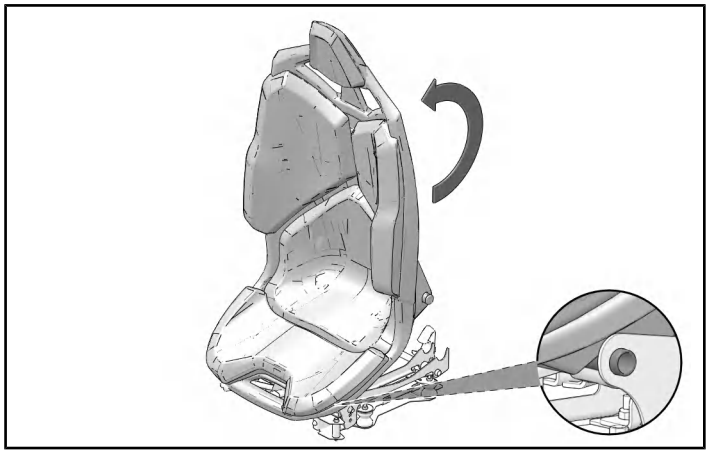

2. Lower seat onto rear receiver tubes.

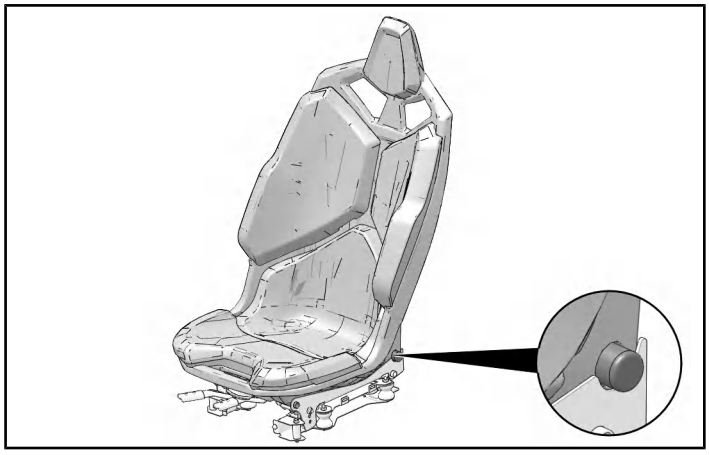

KIT P/N 2889709 INSTALLATION ONLY

DASHBOARD TOP INSTALLATION

1. Carefully lift panels up-and-away from tabs and install dashboard top into place by tilting rear section up and installing front section first, then lower rear section into place.

TIP
Two people are recommended to complete this step.

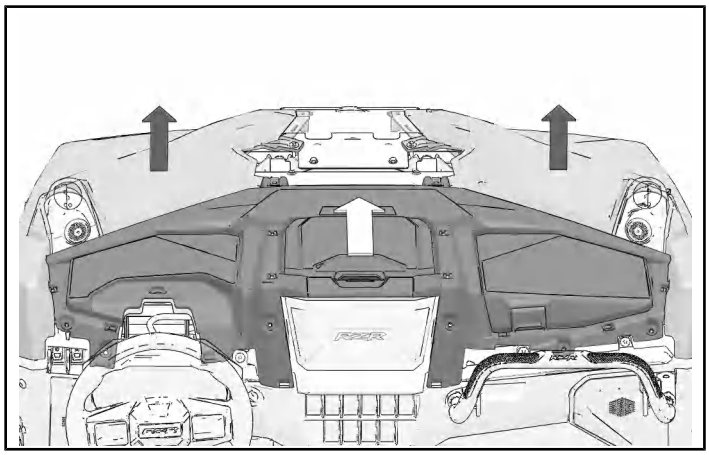

2. Make sure tabs on panels are aligned in slots on dashboard top.

NOTICE
Left side panel shown; right side panel similar.

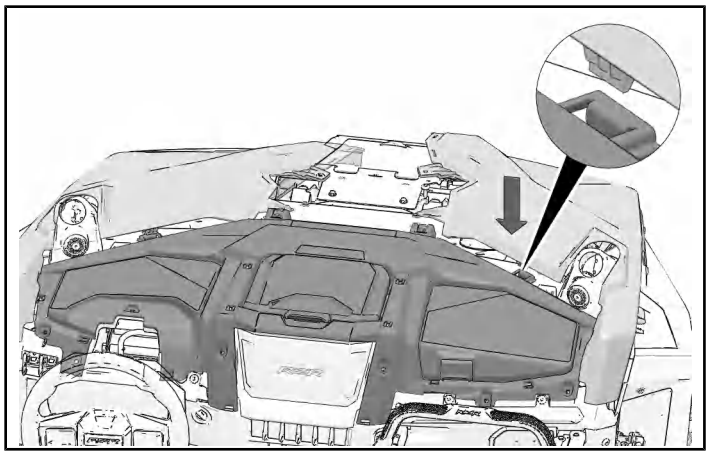

3. Make sure both rubber boots are properly seated around hood panels. Only upper lip should be visible, as shown with inset.

TIP
Push up on inside of fender to ease installation.

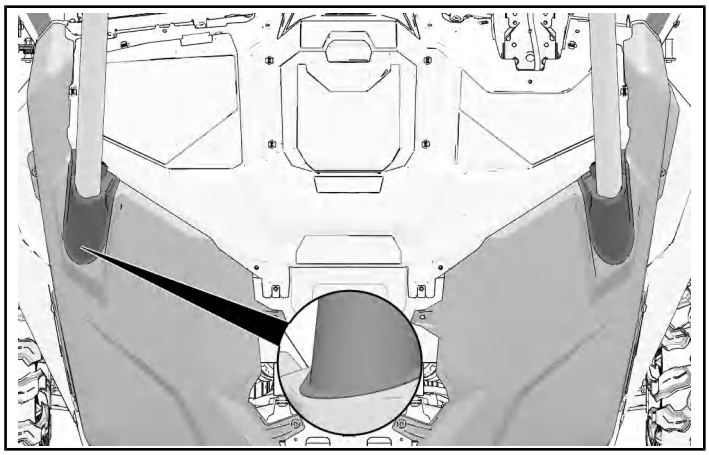

4. Reinstall two retained front dashboard fasteners into front edge of top dashboard.

TORQUE
Front Dashboard Fasteners: **88 in-lbs (10 N·m)**

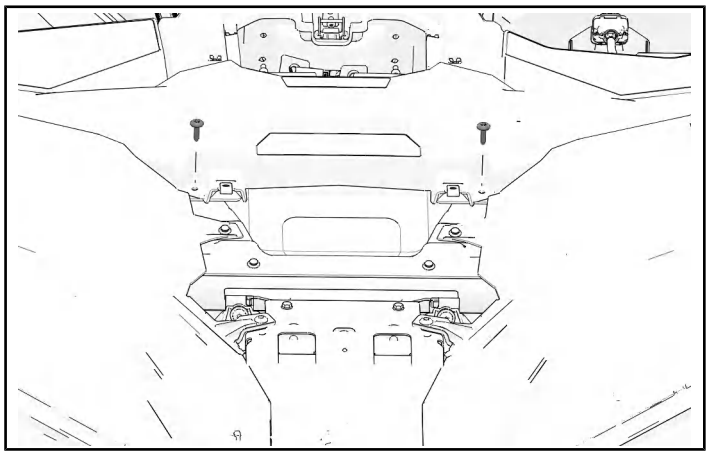

5. Install hood panels to vehicle with two retained push-pin rivets

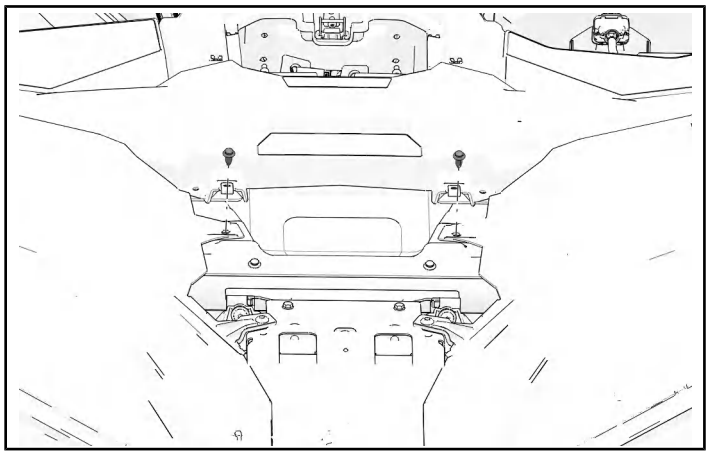

6. Tilt steering wheel down. Install four retained screws through dashboard top and torque to specification.

TORQUE
Dashboard Fasteners: **88 in-lbs (10 N·m)**

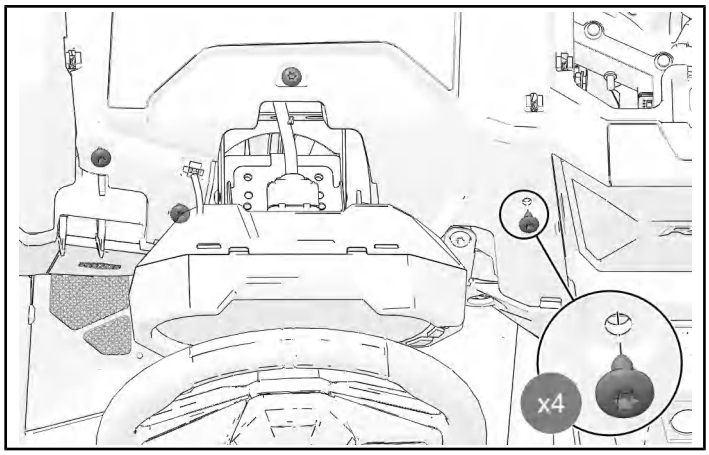

7. Open glove box lid and reinstall storage compartment. Install four retained dashboard fasteners around glove box opening.

TORQUE
Dashboard Fasteners: **88 in-lbs (10 N·m)**

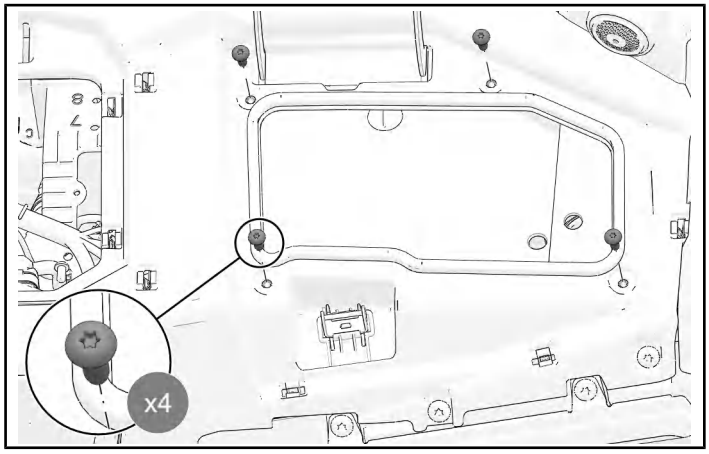

8. Install front of dashboard with three retained dashboard fasteners.

TORQUE
Dashboard Fasteners: **88 in-lbs (10 N·m)**

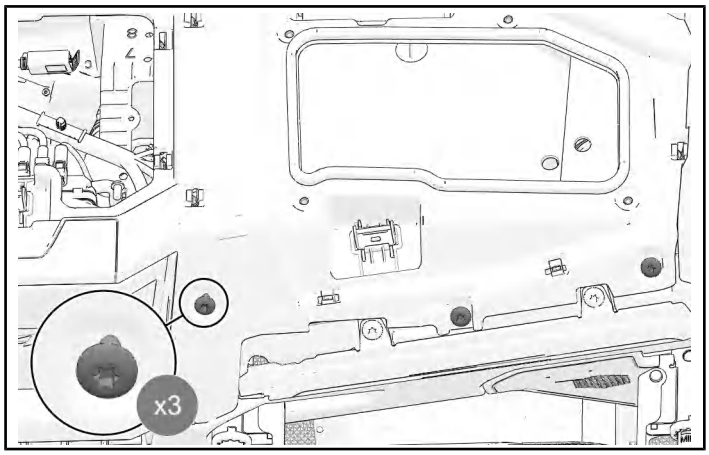

9. Install retained left, center, and right dashboard trim pieces.

TIP
Release steering tilt lock for improved access.

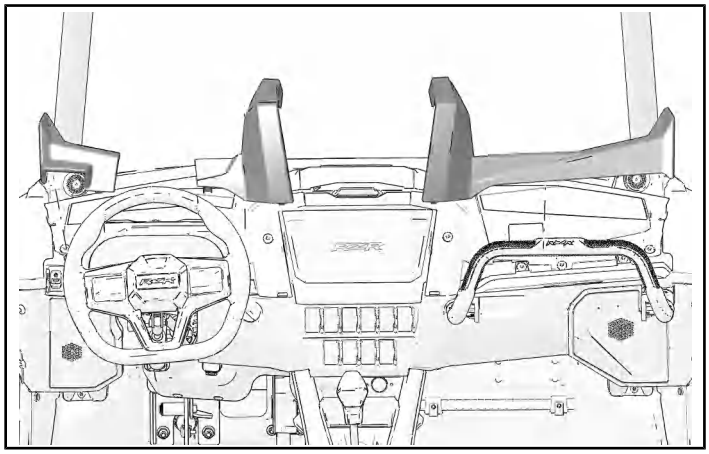

DASHBOARD STORAGE INSTALLATION

1. Put storage compartment into dashboard cavity.

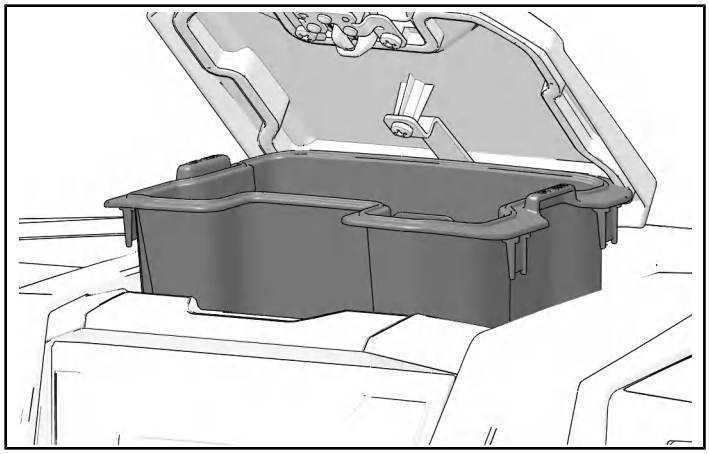

CENTER HOOD PANEL INSTALLATION

1. Move panel forward until tabs slide into front hood panel and install with two hood fasteners.

TORQUE
Hood Fasteners: **88 in-lbs (10 N·m)**

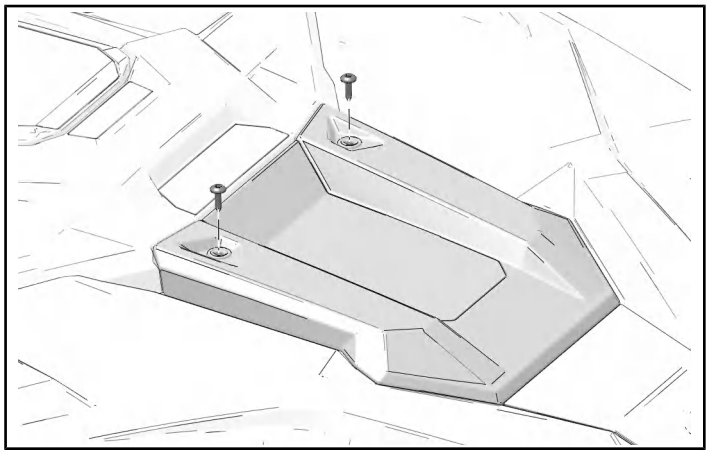

OPERATION

IMPORTANT
The Polaris Audio Roof can draw high levels of electrical current from vehicle and battery. When used at high volume levels and/or combined with in-car audio, light bars, and other accessories, vehicle battery can be placed in a state of discharge. A heavily discharged battery could cause vehicle battery damage and not allow you to restart vehicle.

IMPORTANT
To reduce risk of not being able to restart, Polaris recommends that you carry jumper cables and/or a charged jumper pack to make sure vehicle can restart.

IMPORTANT
You are responsible for monitoring battery voltage levels to make sure battery does not deeply discharge from accessory use. This could cause erratic operation and/or not allow vehicle to restart.

LIGHTBAR ADJUSTMENT

1. Loosen mounting screw on each end of lightbar.

NOTICE
Left side shown; right side similar.

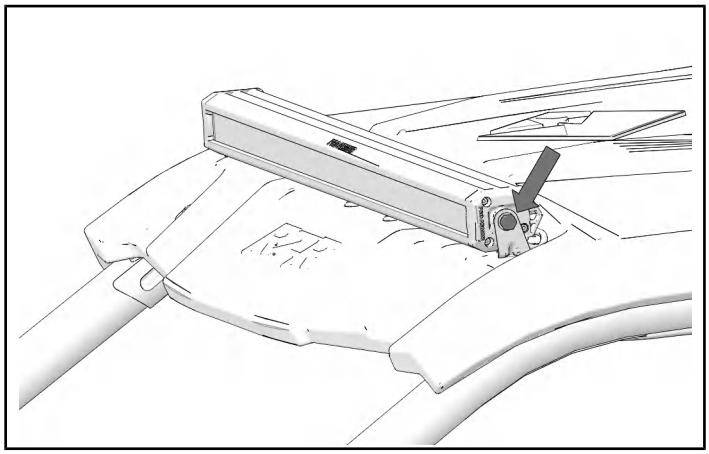

2. Point lightbar as desired.
3. Tighten mounting screws to specification.

TORQUE
Mounting Screws: **106 in-lbs (12 N·m)**

ROOF SETUP VIA RF CONNECT APP

NOTICE
The following tuning procedure is required for proper function on vehicles with Ride Command. For vehicles with PMX-P2 audio source, the RF Connect app can be installed and used to set up Color Optix.

1. Scan QR Code® shown here, or on decal located on Ride Command adapter harness module. QR Code® will direct you to a system setup webpage.

2. On system setup webpage, select the correct app store for your device by clicking on the appropriate icon.

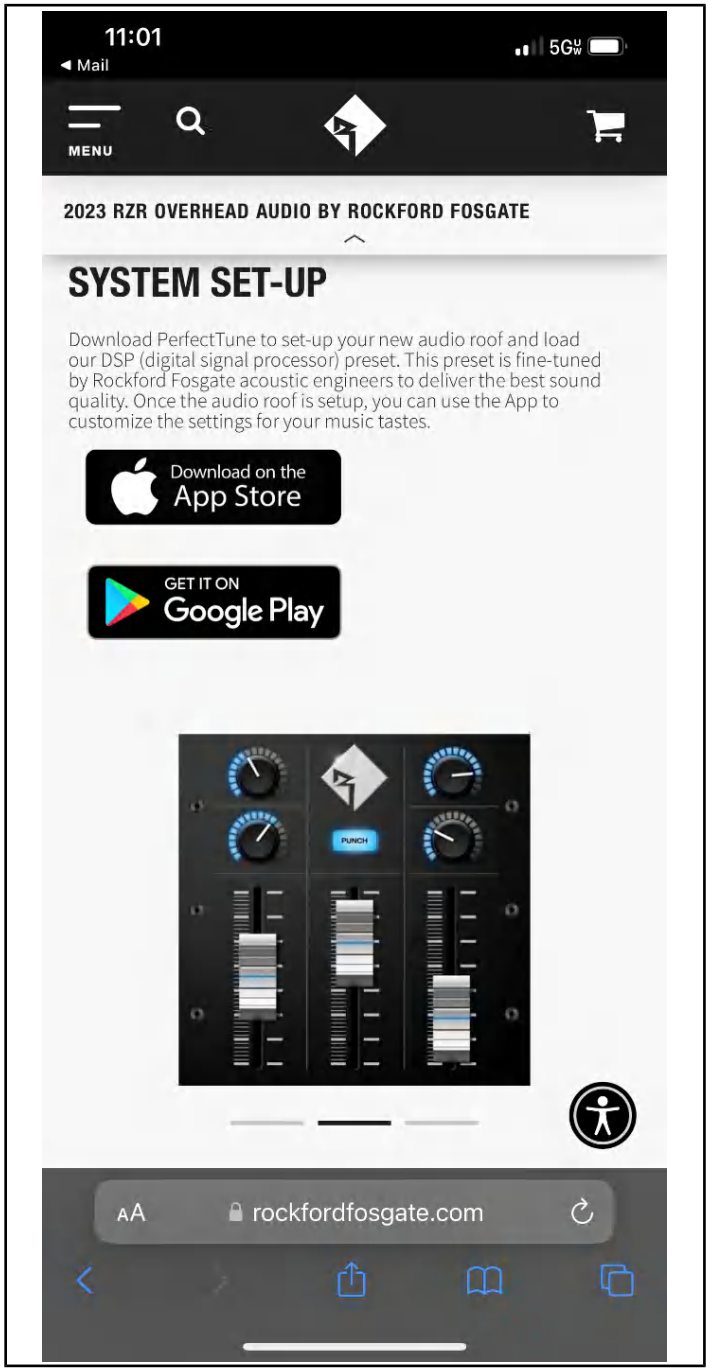

3. Install RF Connect app.

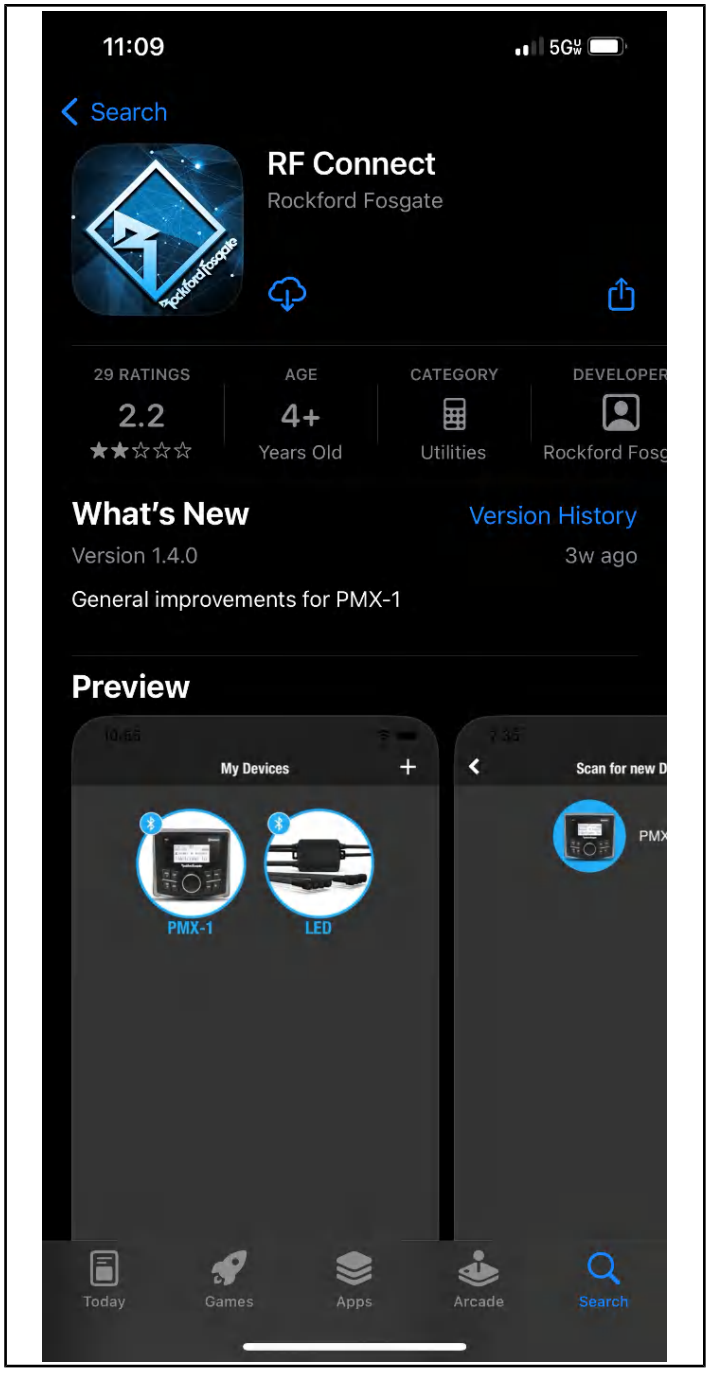

4. Turn vehicle key to ACCY or ON position.
5. Turn on the “Audio” and “Accent Lights” switches. You will hear an audio prompt from roof which will state “Please set up in app.”
6. Open RF Connect app on your device. A blank devices screen will appear.

7. Tap the “Add a device” icon to initiate scanning for other devices.

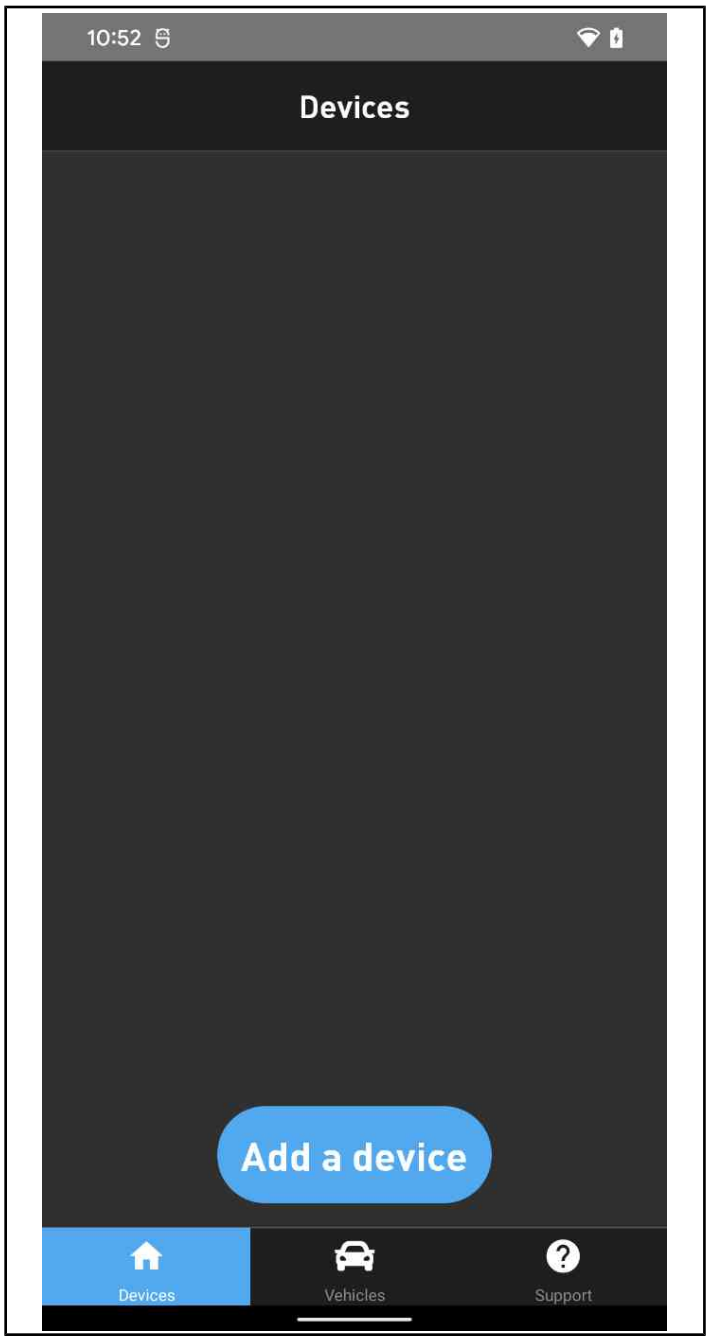

8. The app will scan for devices for a few seconds before listing Rockford devices that are available for connection. If no devices are found during scan, select the “Tap here if device is not shown” icon to manually select product you are scanning for to narrow search.

9. The tuning setup steps are only for vehicles equipped with Ride Command or in-vehicle PMX audio source.. For stand-alone PMX Audio Roofs, no tune setup is required. Color Optix can be set up for RGB Accent light color control.
   - **Vehicles with Ride Command or in-vehicle PMX audio source:** Once roof has been detected icons labelled “RZR Overhead Audio” and “Color Optix Controller” will appear. Select the “RZR Overhead Audio” icon to proceed.
   - **Vehicles with Stand-alone PMX Audio Roofs:** For these roofs you will only see “Color Optix Controller” appear on scan screen. Tap on the “Color Optix Controller” on this screen and skip to page 26 to proceed.

10. Once the RZR Overhead Audio device is selected, a prompt will appear. Since this is the first time the roof will be paired with your device, answer “No” to the “Add device to a group?” question.

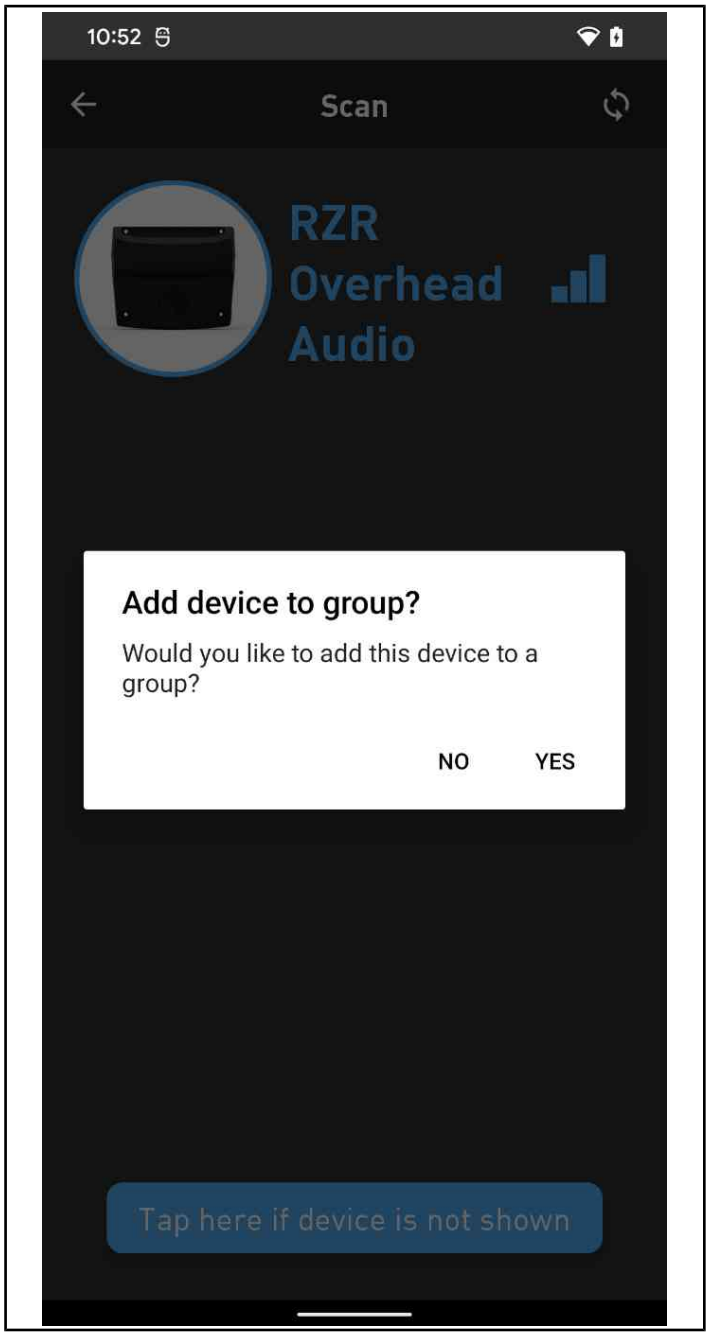

11. The app will return to the “Devices” screen where you should now see “RZR Overhead Audio” as an option with the text and icon surround highlighted in **blue**. Select the icon again to pull up the paired device.

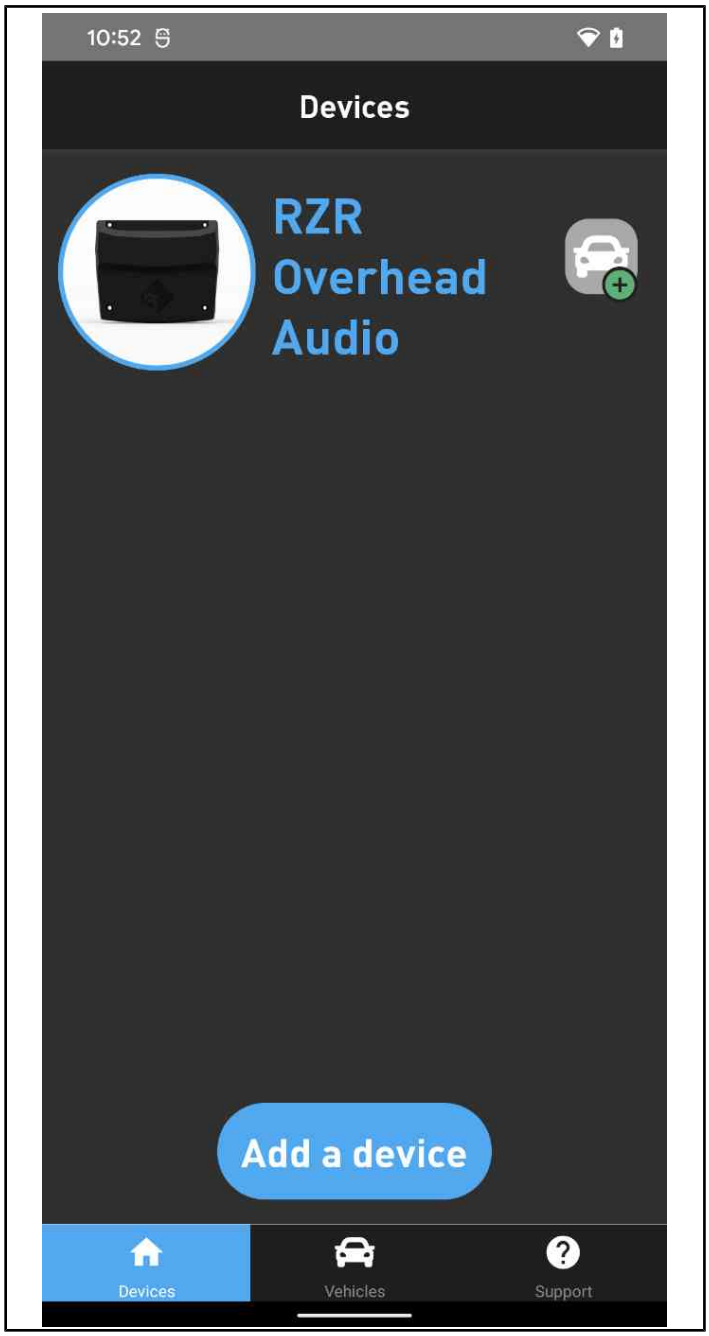

12. Once the “RZR Overhead Audio” device page opens, select the “Setup” icon to initiate vehicle setup.

13. Select the source unit that is driving your audio system.
    - If your vehicle is equipped with Ride Command, select the “Polaris Ride Command” option.
    - If your vehicle is equipped with a Rockford Fosgate in-vehicle source unit, select the “Rockford PMX-P2” option.

14. If you select the PMX-P2 option on the previous page you will be directed to select your vehicle configuration.
    - If you have a 2-seat vehicle select the “2 Seats” option.
    - If you have a 4-seat vehicle, select the “4 Seats” option.

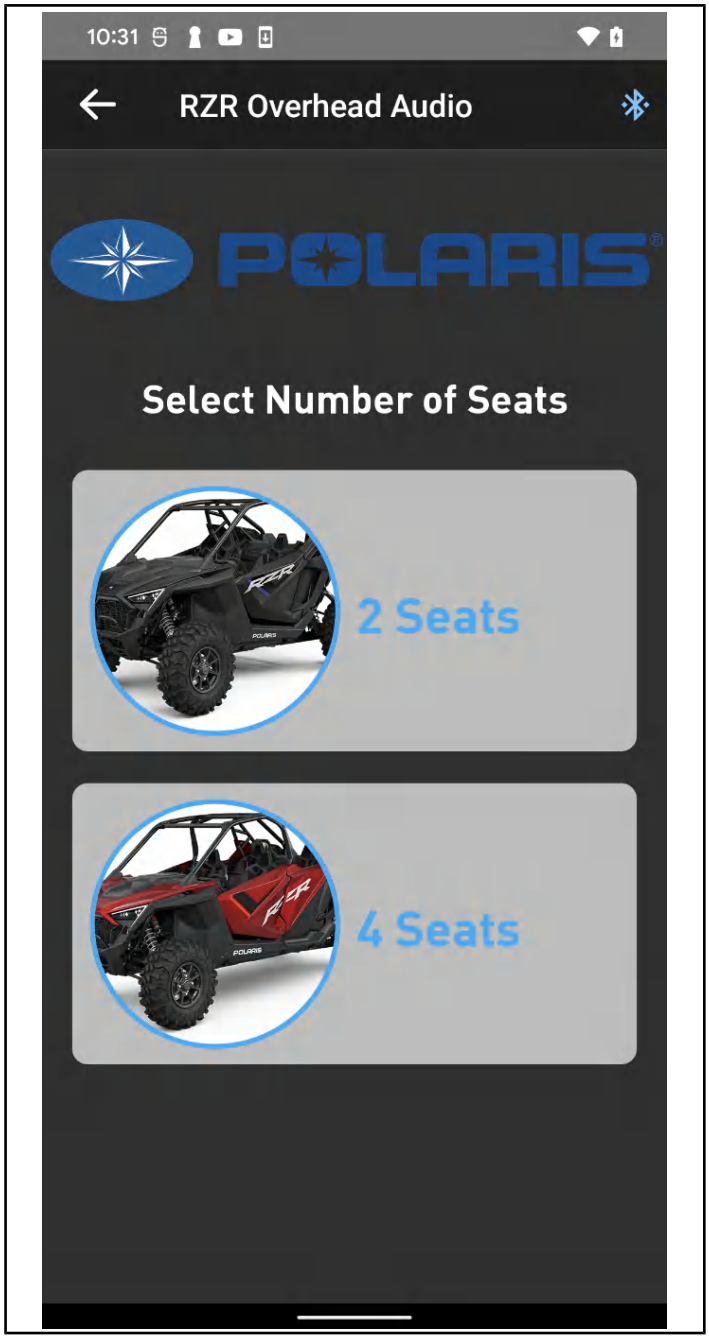

15. The tune will now begin to upload. Please wait a few seconds for the tune to upload in full.

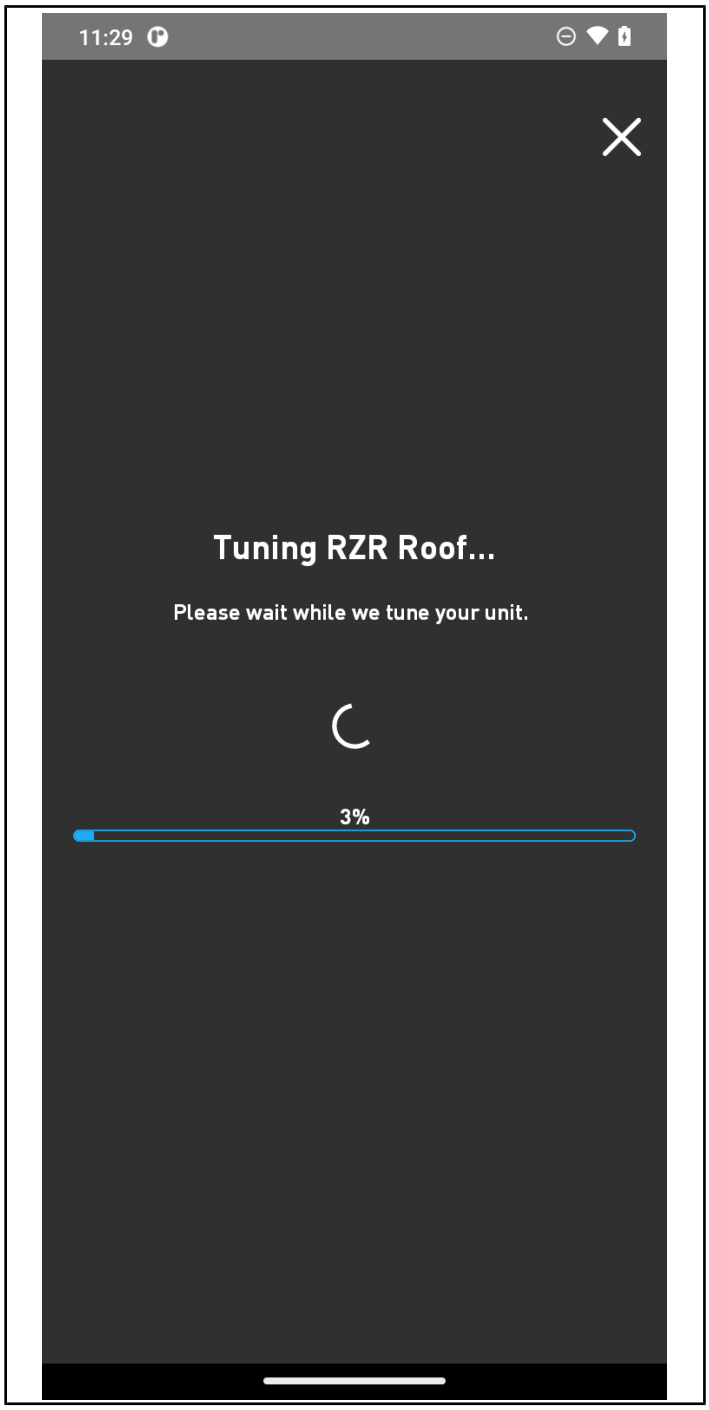

16. Once the tune has been uploaded successfully, you will get a “Tune Complete” message with the icon shown below.

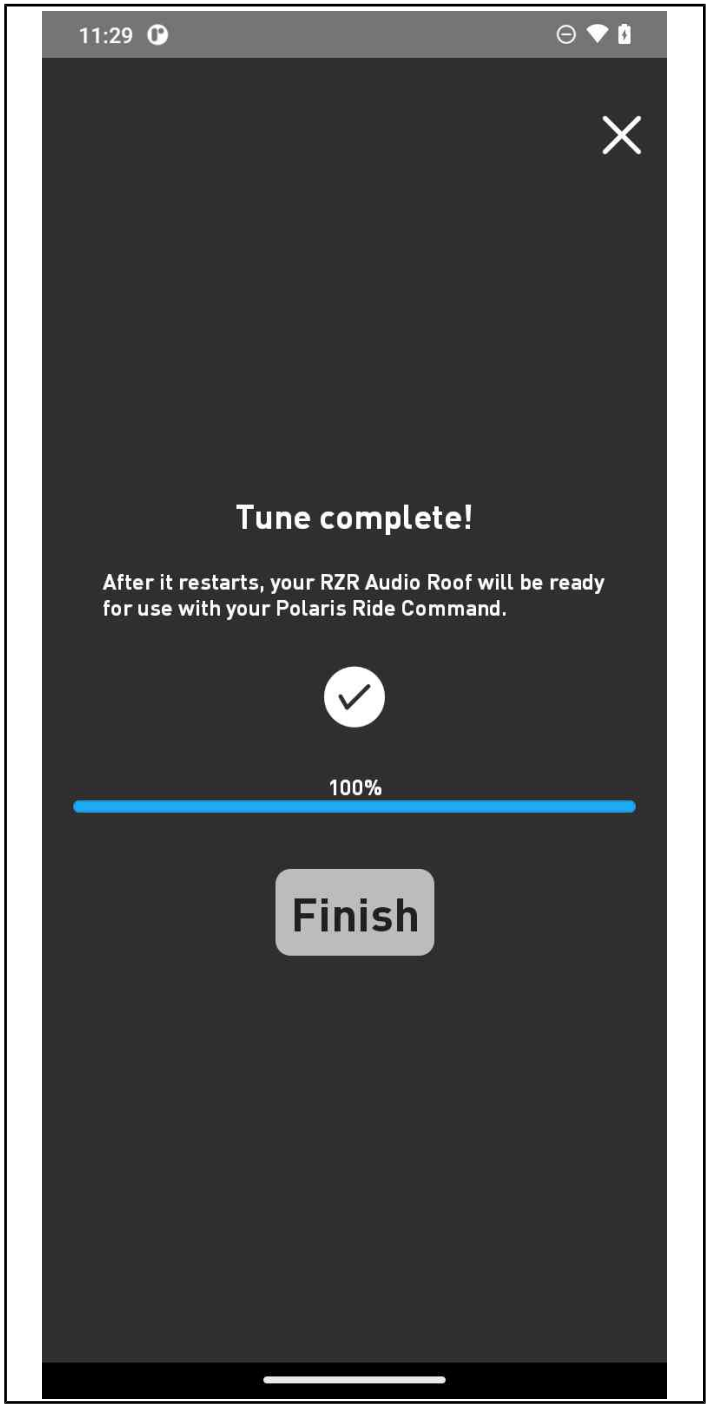

17. Roof setup has been completed. The customer will now be able to pass audio.

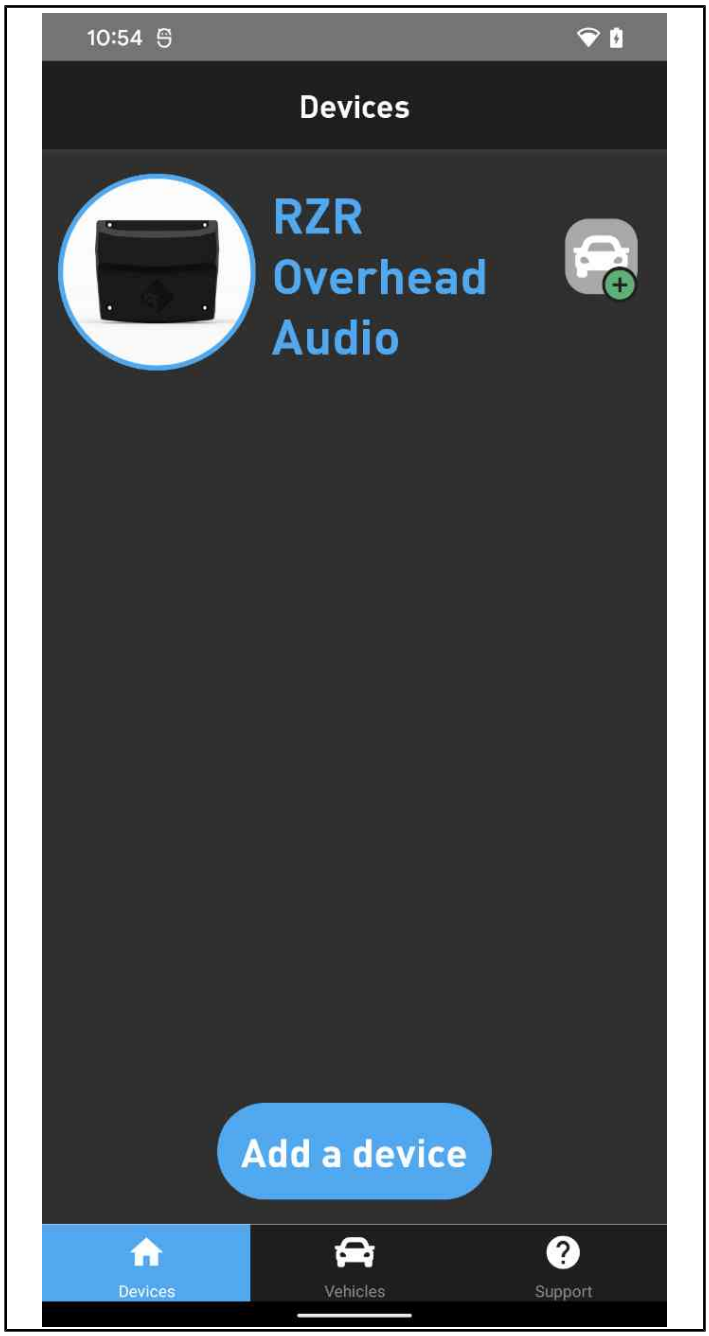

18. After roof setup, you will be prompted to setup Color Optix. This will connect the Color Optix controller to your device and allow you to manipulate the RGB lighting in the roof. You can opt to do this later, but it is encouraged to complete this step now. Select “Yes” to continue.

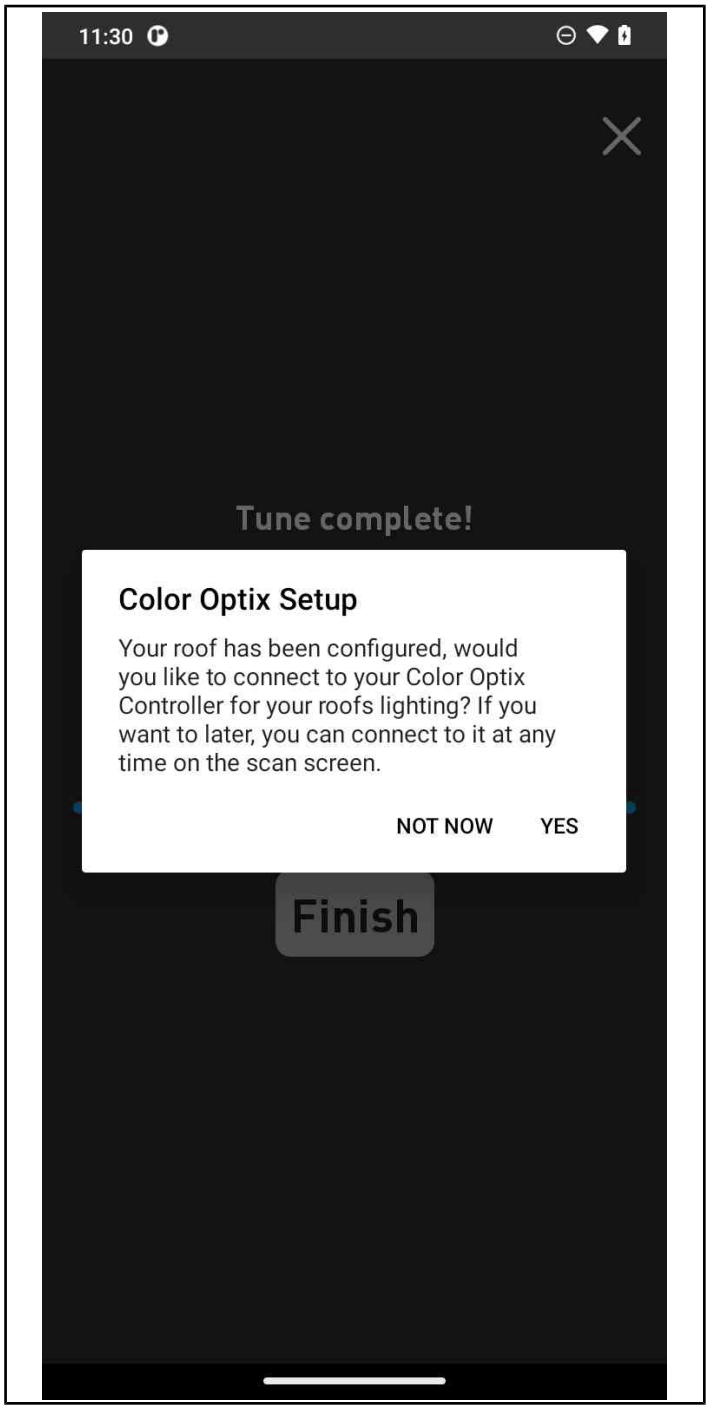

19. Turn on the Accent Light Switch.

20. Choose to proceed or continue setup later. Make sure that the Accent Light Switch is turned on and select the “My accent light switch is on, proceed” selection at the bottom of the screen in green.

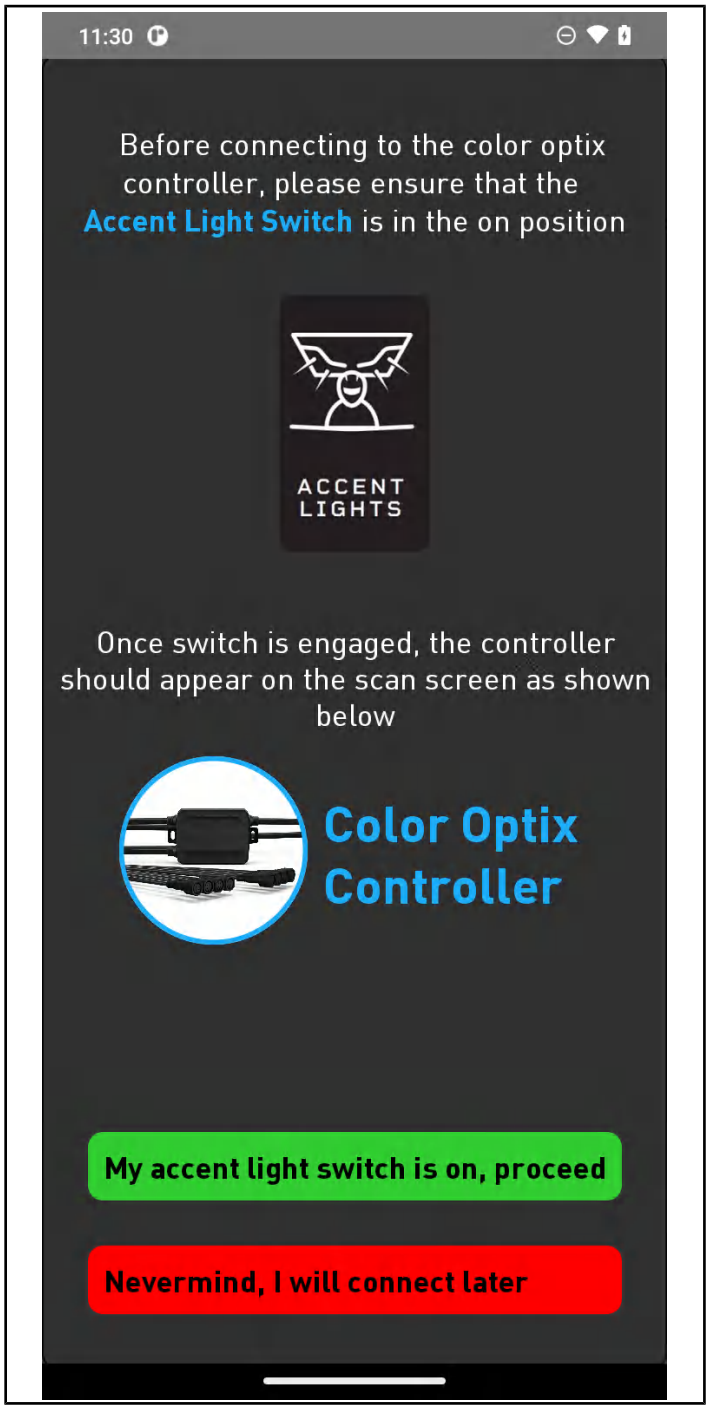

21. After selecting “My accent light switch is on, proceed,” the app will return to scan screen with your Color Optix Controller connected. Tap on the Color Optix Controller on this screen to proceed.

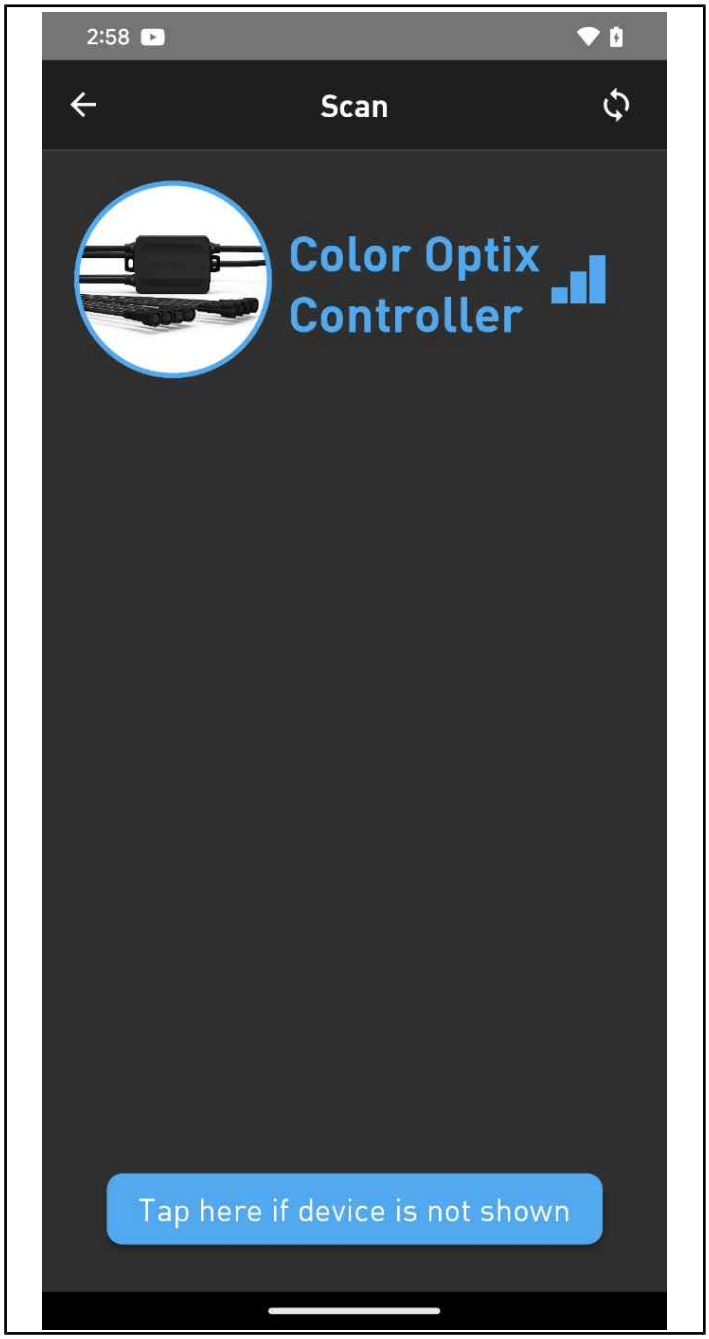

22. After tapping the Color Optix Controller on the Scan screen, you will be brought to the Devices screen where the Color Optix Controller will appear. A blue ring will be shown around the controller image indicating that it is connected. Tap on the device to bring you to the controller page.

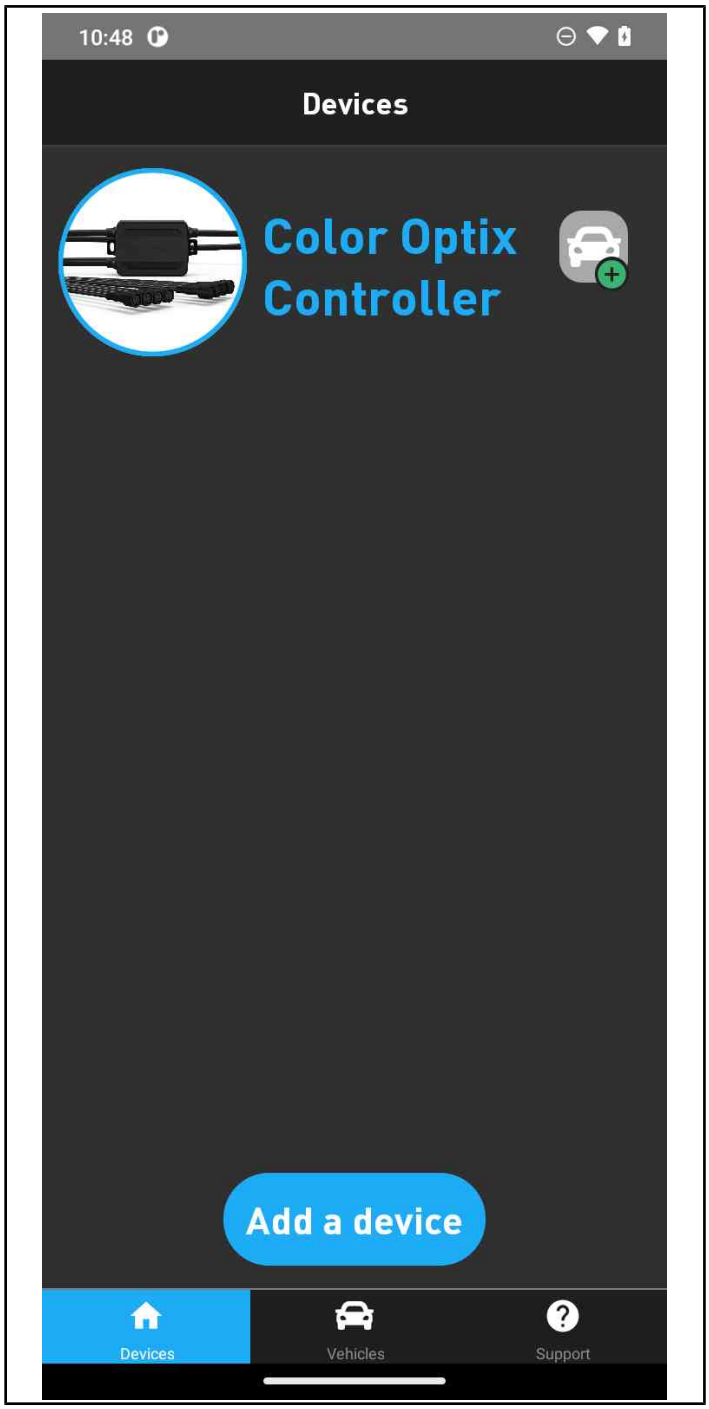

23. From here you will be able to adjust the accent lighting to your application.

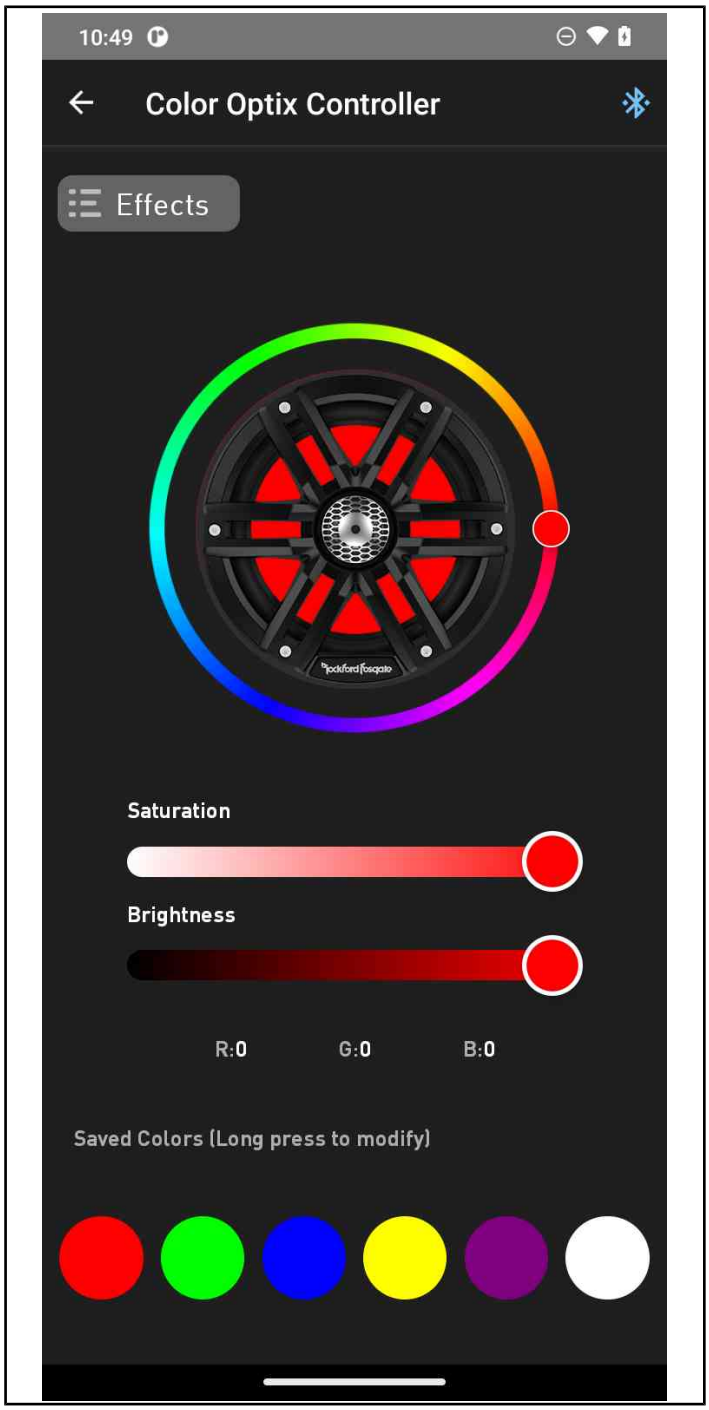

24. If you have any issues during setup, you can select the Support tab on the bottom of your screen to access contact information for the Rockford Fosgate team.

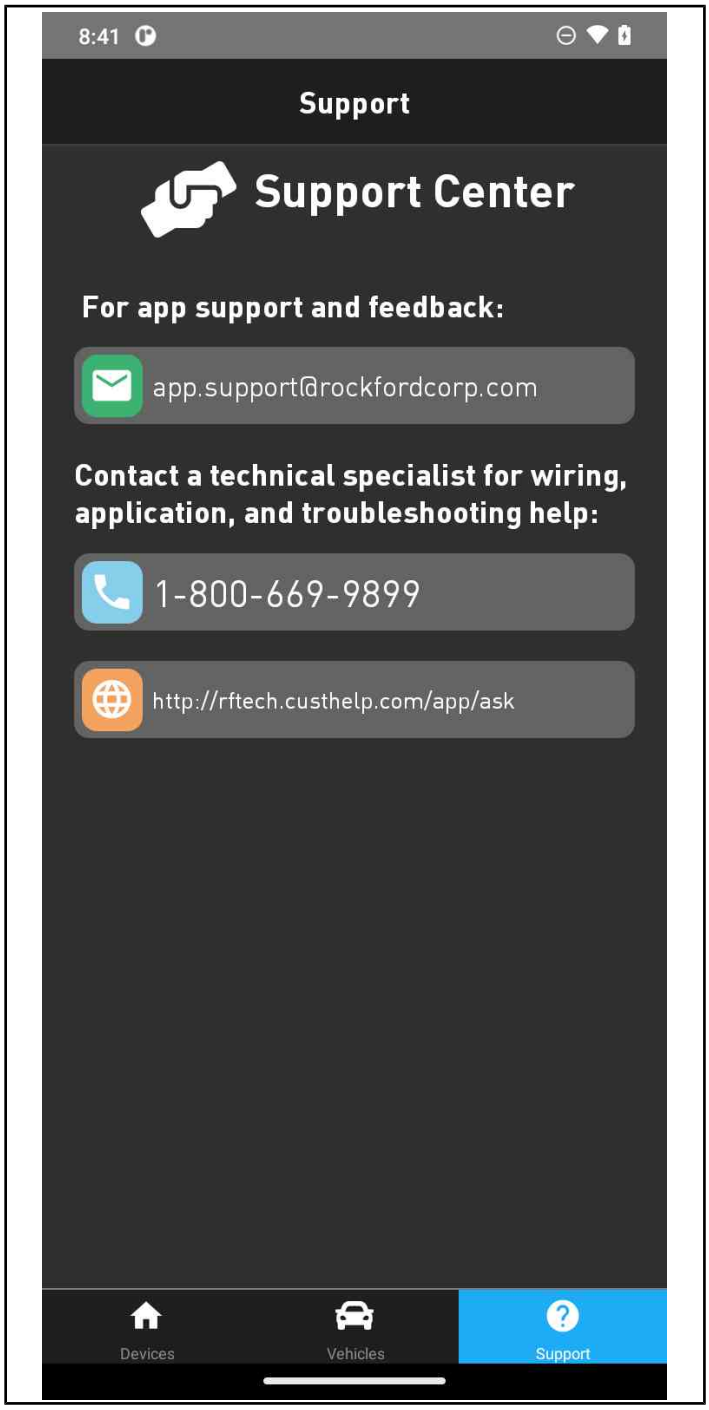

POLARIS® PMX-P2 SOURCE UNIT OWNERS MANUAL

The PMX-P2 owners manual is viewable on mobile devices by scanning the QR Code® or by clicking **HERE** if viewing on a PC.

INSTRUCTION FEEDBACK FORM

A feedback form has been created for the installer to provide any comments, questions or concerns about the installation instructions. The form is viewable on mobile devices by scanning the QR Code® or by clicking **HERE** if viewing on a PC.

Warning
To assure continued compliance, any changes or modifications not expressly approved by the party.Responsible for compliance could void the user's authority to operate this equipment.

FCC Statement
This equipment complies with Part 15 of the FCC Rules. Operation is subject to the following two conditions:
(1) This device may not cause harmful interference, and
(2) This device must accept any interference received, including interference that may cause undesired operation.

NOTE: This equipment has been tested and found to comply with the limits for a Class B digital device, pursuant to part 15 of the FCC rules. These limits are designed to provide reasonable protection against harmful interference in a residential installation. This equipment generates, uses and can radiate radio frequency energy and, if not installed and used in accordance with the instructions, may cause harmful interference to radio communications.
However, there is no guarantee that interference will not occur in a particular installation. If this equipment does cause harmful interference to radio or television reception, which can be determined by turning the equipment off and on, the user is encouraged to try to correct the interference by one or more of the following measures:
-Reorient or relocate the receiving antenna.
-Increase the separation between the equipment and receiver.
-Connect the equipment into an outlet on a circuit different from that to which the receiver is connected.
-Consult the dealer or an experienced radio/TV technician for help.

FCC Radiation Exposure Statement:
The equipment complies with FCC Radiation exposure limits set forth for uncontrolled enviroment. This equipment should be installed and operated with minimum distance 20cm between the radiator and your body.