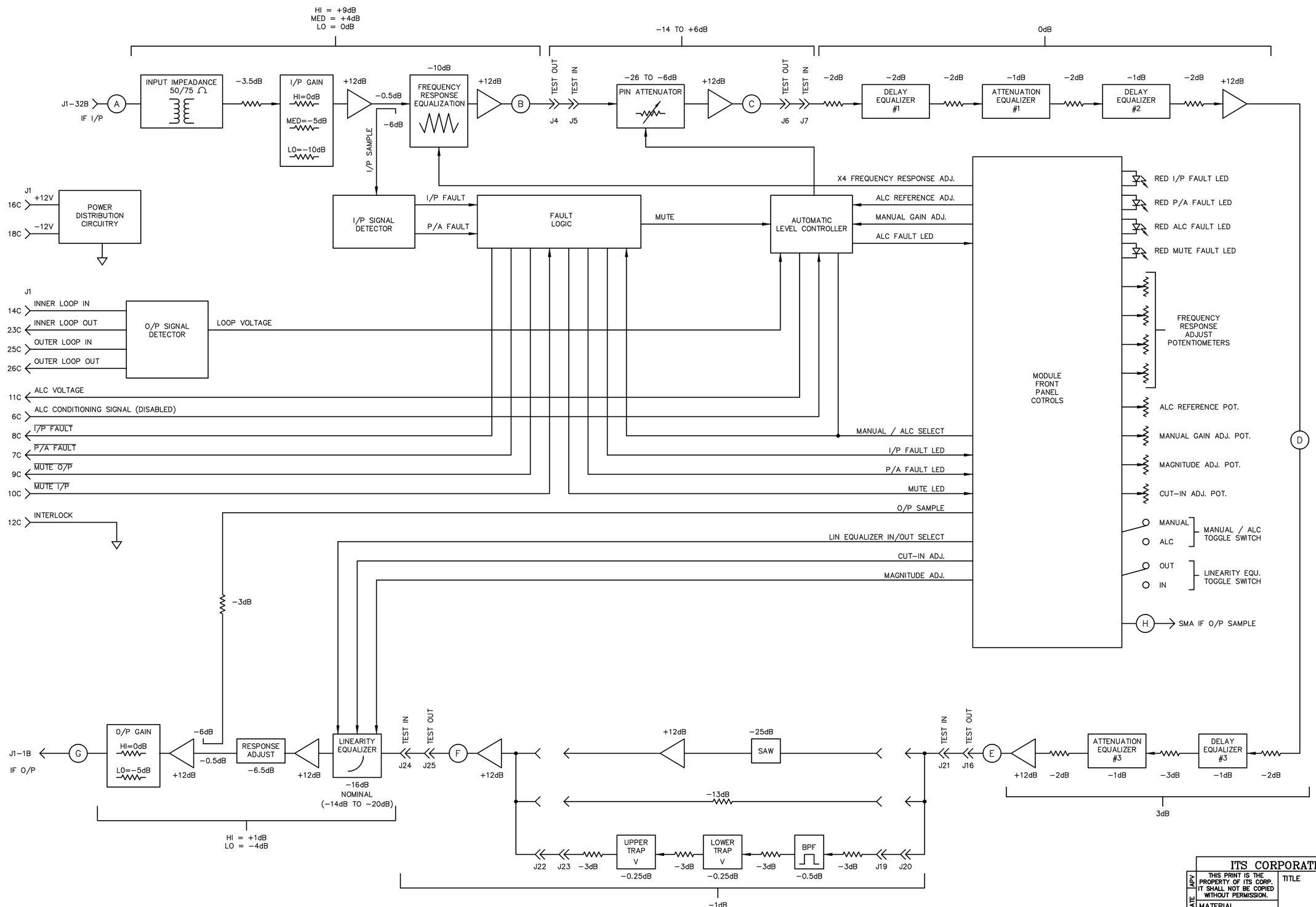


ON SHEET 2, ADDED "PEP AND NOTE AT SIGNAL LEVEL SPECS. JKF

| REV | ECN | DATE | APV |
|---|---|---|---|
| 1 | 9330 | | |

**ITS CORPORATION**

THIS PRINT IS THE PROPERTY OF ITS CORP. IT SHALL NOT BE COPIED WITHOUT PERMISSION.

MATERIAL ----- 

FINISH ----- 

TITLE B/D, IF PROC MOD 44MHz, W/ SAW

| | | | |
|---|---|---|---|
| DWN | TMY | 1/19/98 | DWG. NO. 1585−3127 REV 1 |
| CHK | BKW | 1/19/98 | |
| REL | BKW | 1/19/98 | D SCALE−−− SHEET 1 OF 2 |