# 2. System Configuration

# Chapter 2. System Configuration

## 2.1 Components

A list of components and optional accessories is shown below.

### Components of the Display Unit

**Table 2.1.1 The list of components of the Display Unit**

| Unit | | | Type name | Q'ty | Remarks |
|---|---|---|---|---|---|
| LCD monitor | | (JMR-92XX/JAN-92XX) | NWZ-208 | 1 | 26inch LCD monitor |
| | | (JMR-72XX/JAN-72XX) | NWZ-207 | | 19inch LCD monitor |
| Touch Panel monitor | | (JMR-92XX/JAN-92XX) | NWZ-208-TP | | Option 26inch |
| | | (JMR-72XX/JAN-72XX) | NWZ-207-TP | | Option 19inch |
| Control Unit | | | NCM-928 | 1 | Standard Equipment |
| | Power Supply Unit | | NBD-913 | 1 | Standard Equipment |
| | Central Control Unit | | NDC-1590 | 1 | Standard Equipment |
| | | 8GB System SSD | CDD-752 | 1 | Included in the NDC-1590 |
| | | 256GB Data SSD | CDD-753 | 1 | |
| | | DVD Drive | CDD-754 | 1 | |
| | | HASP | CYC-344 | 1 | |
| | | e-Token | CYC-735 | 1 | |
| | | Central Processing Circuit | CDC-1410 | 1 | |
| | | CCU Interface Circuit | CMH-2406 | 1 | |
| | | CCU Interface Terminal | CQD-2286 | 1 | |
| | | CCU Interconnection | CML-902 | 1 | |
| | | COM Express Board | CMC-1406 | 1 | |
| | | WES7P Licence | CYC-847 | 1 | |
| | | TMSL Licence | CYC-848 | 1 | |
| | Trackball Operation Unit | | NCE-5605 | 1 | Standard Equipment |
| | | Operation Circuit A | CCK-1050 | 1 | Inclueded in the NCE-5605 |
| | | Trackball | CCK-1060 | 1 | |
| | | Operation Circuit SW | CCK-1069 | 1 | |
| | | Operation Circuit CN | CCK-1070 | 1 | |
| | | TOPU Interconnection | CMD-1103 | 1 | |
| Keyboard Operation Unit | | | NCE-5625 | 1 | Option(NCE-5625 or CWB-1593) |
| | | Operation Circuit B | CCK-1059 | 1 | Included in the NCE-5625 |
| | | Option Keyboard | CCK-1061 | 1 | |
| | | KOPU Interconnection | CMD-1106 | 1 | |
| Large Tray | | | CWB-1593 | 1 | Option(NCE-5625 or CWB-1593) |
| UPS | | QUINT-PS/1AC/24DC/20 | - | 1 | Option |
| | | QUINT-BAT/24DC/3.4AH | - | 1 | |
| | | QUINT-DC-UPS/QUINT20 | - | 1 | |
| | | ME-MAX-NEF/QUINT20 | - | 1 | |
| Junction Box | | | NQE-1143 | 1 | Option |
| | | Serial LAN Circuit | CMH-2370 | max 2 | Option |
| | | Analog Option Circuit | CMJ-560 | 1 | Option |
| | | Gyro Interface Circuit | CMJ-554 | 1 | Option |
| | | Radar Interface Circuit | CQD-2273 | 1 | Option |
| | | Scanner AC Power Cable | CML-836AC | 1 | Any one of these cables include to the CQD-2273 |
| | | Scanner AC Power Cable(F) | CML-836ACF | | |
| | | Scanner DC Power Cable | CML-836DC | | |
| | | Scanner DC Power Cable(F) | CML-836DCF | | |
| Sensor LAN Switch Unit | | | NQA-2443 | max 2 | Option<br>In case of standalone type<br>26inch:max 2<br>19inch:only 1 |
| | | 16Port Switch HUB | CQL-221 | 1 | Included in the NQA-2443 |
| | | Sensor LAN Switch Interconnection | CML-841 | 1 | |

## Table 2.1.2 The list of components of the Display Unit

| Unit | | Type name | Q'ty | Remarks |
|---|---|---|---|---|
| Stand-alone type Frame & Cables | 26inch Display Mount Kit | CWA-246 | 1 | For 26inch Monitor |
| | 19inch Display Mount Kit | CWA-245 | | For 19inch Monitor |
| | Display Unit Interconnection | CML-901 | 1 | Cables for stand-alone |
| | Relay Terminal | CQD-2312 | 1 | For AC/DC Power distribution |
| | Touch Panel Interconnection | CML-839 | 1 | Option |
| Desktop type Frame & Cables | 26inch Desktop Frame | CWB-1595 | 1 | For 26inch Monitor |
| | 19inch Desktop Frame | CWB-1594 | | For 19inch Monitor |
| | OPU Desktop Frame | CWB-1596 | 1 | For operation unit |
| | Display Unit Interconnection(F) | CML-901-F | 1 | Longer than CML-901 |
| | Touch Panel Interconnection(F) | CML-839-F | 1 | Option |
| Flush-mount type Cables | Display Unit Interconnection(F) | CML-901-F | 1 | Longer than CML-901 |
| | Touch Panel Interconnection(F) | CML-839-F | 1 | Option |
| Interswitch Unit | 4ch | NQE-3141-4A | 1 | Option |
| | 8ch | NQE-3141-8A | 1 | Option |
| Power Control Unit | | NQE-3167 | 1 | Option |
| Digital Signal Converter | 32ch | NCT-82 | 1 | Option |
| | 64ch | NCT-83 | 1 | Option |
| Buzzer Unit | | CGC-25 | 1 | Option TCS Buzzer |
| Remote monitor display connection | RGB Video Distribution Amplifier | VAC-2001HB-A | 1 | Option |
| | Monitor Extension Kit | CFQ-5957 | 1 | Option |
| Cover | (JMR-92XX/JAN-92XX) | CWB-1621 | 1 | Option |
| | (JMR-72XX/JAN-72XX) | CWB-1619 | | |
| Hood | (JMR-92XX/JAN-92XX) | CWB-1620 | 1 | Option |
| | (JMR-72XX/JAN-72XX) | CWB-1618 | | Option |
| Accessory | CD Cleaner | 7ZZNA0426B | 1 | Packing 1 box |
| Spare Parts | NBD-913 Spare Parts | 7ZXNA4021 | 1 | Packing 1 box |
| | CMH-2370 Spare Parts | 7ZXNA4020 | 1 | Option |
| | CMJ-554 Spare Parts | 7ZXNA4022 | 1 | Option |
| | 7HPNA4003 Printer spare parts | 7ZXNA4011 | 1 | Option |
| | NCT-82/83 Spare Parts | 7ZXNA4017 | 1 | Option |
| Printer | Printer | 7HPNA4003 | 1 | Option |
| | L-Type Stopper(Printer fixture) | QL-58 | 1 | |

# Manuals

### Table 2.1.3 The list of Manuals

| Model | Title | Code | Remarks |
|---|---|---|---|
| JMR-7200/9200 Series | JMR-7200/9200 Series Marine Radar Equipment Instruction Manual <Basic Operation> (1/3) *English | 7ZPNA4446*1 | Standard Equipment |
| | JMR-7200/9200 Series Marine Radar Equipment Instruction Manual <Function> (2/3) *English | 7ZPNA4447*1 | Standard Equipment |
| | JMR-7200/9200 Series Marine Radar Equipment Instruction Manual <Reference> (3/3) *English | 7ZPNA4448*1 | Standard Equipment |
| | JMR-7200/9200 Series Marine Radar Equipment Quick Operation Guide *English | 7ZPNA4395*1 | Standard Equipment |
| | JMR-7200/9200 Series JAN-7201/9201 Marine Radar Equipment ECDIS Additional Manual for Chart Installation *English | 7ZPNA4461*1 | Option |
| | JMR-7200/9200 Series JAN-7201/9201 JAN-7202/9202 Marine Radar Equipment ECDIS Conning Display Installation Manual *English | 7ZPNA4466*1 | Option |
| | JMR-7200/9200 Series JAN-7201/9201 JAN-7202/9202 Marine Radar Equipment ECDIS Conning Display Field Service Manual *English | 7ZPNA4467*1 | Option |
| JAN-7201/9201 | JAN-7201/9201 ECDIS Instruction Manual <Basic Operation> (1/3) *English | 7ZPNA4449*1 | Standard Equipment |
| | JAN-7201/9201 ECDIS Instruction Manual <Function> (2/3) *English | 7ZPNA4450*1 | Standard Equipment |
| | JAN-7201/9201 ECDIS Instruction Manual <Reference> (3/3) *English | 7ZPNA4451*1 | Standard Equipment |
| | JAN-7201/9201 ECDIS Quick Operation Guide *English | 7ZPNA4405*1 | Standard Equipment |
| | JMR-7200/9200 Series JAN-7201/9201 Marine Radar Equipment ECDIS Additional Manual for Chart Installation *English | 7ZPNA4461*1 | Option |
| | JAN-7201/9201 ECDIS Additional Manual for Automatic Sailing YOKOGAWA Autopilot PT500A TCS model Category B/C *English | 7ZPNA4462*1 | Option |
| | JAN-7201/9201 ECDIS Additional Manual for Automatic Sailing TOKYO KEIKI Autopilot PR-6000/9000 TCS model Category B/C *English | 7ZPNA4463*1 | Option |
| | JAN-7201/9201 ECDIS Type Specific ECDIS Training Reference for TCS *English | 7ZPNA4464*1 | Option |
| | JMR-7200/9200 Series JAN-7201/9201 JAN-7202/9202 Marine Radar Equipment ECDIS Conning Display Installation Manual *English | 7ZPNA4466*1 | Option |
| | JMR-7200/9200 Series JAN-7201/9201 JAN-7202/9202 Marine Radar Equipment ECDIS Conning Display Field Service Manual *English | 7ZPNA4467*1 | Option |
| JAN-7202/9202 | JAN-7202/9202 Conning Display Instruction Manual *English | 7ZPNA4452*1 | Standard Equipment |
| | JMR-7200/9200 Series JAN-7201/9201 JAN-7202/9202 Marine Radar Equipment ECDIS Conning Display Installation Manual *English | 7ZPNA4466*1 | Option |
| | JMR-7200/9200 Series JAN-7201/9201 JAN-7202/9202 Marine Radar Equipment ECDIS Conning Display Field Service Manual *English | 7ZPNA4467*1 | Option |

*1 Revision symbol(A,B,C..) is added to the end of each type name.

## Radar Antenna Types and Specifications

**Table 2.1.4 The list of Radar Antenna Types and Specifications**

| Radar antenna type | Radio wave type | ft | Transmitter-receiver unit | Transmitting power | Band | Power supply | Rate of rotation | Category |
|---|---|---|---|---|---|---|---|---|
| NKE-1632 | P0N,Q0N | 12 | - | 250W | S | AC | 24rpm | CAT 1C |
| NKE-2632 | P0N,Q0N | 8 | - | 250W | S | AC | 24rpm | CAT 1C |
| NKE-2632-H | P0N,Q0N | 8 | - | 250W | S | AC | 48rpm | CAT 1C |
| NKE-1139 | P0N | 12 | NTG-3230 | 30kW | S | AC | 24rpm | CAT 1C |
| NKE-1130 | P0N | 12 | - | 30kW | S | AC | 24rpm | CAT 1C |
| NKE-1129-9 | P0N | 9 | NTG-3225 | 25kW | X | AC | 24rpm | CAT 1C |
| NKE-1129-7 | P0N | 7 | NTG-3225 | 25kW | X | AC | 24rpm | CAT 1C |
| NKE-1125-9 | P0N | 9 | - | 25kW | X | AC | 24rpm | CAT 1C |
| NKE-1125-6 | P0N | 6 | - | 25kW | X | AC | 24rpm | CAT 1C |
| NKE-2254-6HS | P0N | 6 | - | 25kW | X | DC | 48rpm | CAT 1C |
| NKE-2103-6 | P0N | 6 | - | 10kW | X | DC | 27rpm | CAT 1C |
| NKE-2103-6HS | P0N | 6 | - | 10kW | X | DC | 48rpm | CAT 1C |

## General Type Name

**Table 2.1.5 The list of General Type Name**

| General type name | Model | Radar antenna | Transmitter-receiver unit | Display | Ship's mains |
|---|---|---|---|---|---|
| JMR-9272-S * | RADAR/MFD | NKE-1632 | - | 26inch NWZ-208 | Specify 100-115VAC or 220-240VAC when ordering. 50/60 Hz Single phase 24VDC (For backup) |
| JMR-9282-S * | | NKE-2632 | - | | |
| JMR-9282-SH * | | NKE-2632-H | - | | |
| JMR-9230-S3 | | NKE-1139 | NTG-3230 | | |
| JMR-9230-S | | NKE-1130 | - | | |
| JMR-9225-9X3 | | NKE-1129-9 | NTG-3225 | | |
| JMR-9225-7X3 | | NKE-1129-7 | NTG-3225 | | |
| JMR-9225-9X | | NKE-1125-9 | - | | |
| JMR-9225-6X | | NKE-1125-6 | - | | |
| JMR-9225-6XH | | NKE-2254-6HS | - | | AC wide range Input 24VDC (For backup) |
| JMR-9210-6X | | NKE-2103-6 | - | | |
| JMR-9210-6XH | | NKE-2103-6HS | - | | |
| JAN-9201 | ECDIS | - | - | | |
| JAN-9202 | Conning | - | - | | |
| JMR-7272-S | RADAR/MFD | NKE-1632 | - | 19inch NWZ-207 | Specify 100-115VAC or 220-240VAC when ordering. 50/60 Hz Single phase 24VDC (For backup) |
| JMR-7282-S | | NKE-2632 | - | | |
| JMR-7282-SH | | NKE-2632-H | - | | |
| JMR-7230-S3 | | NKE-1139 | NTG-3230 | | |
| JMR-7230-S | | NKE-1130 | - | | |
| JMR-7225-9X3 | | NKE-1129-9 | NTG-3225 | | |
| JMR-7225-7X3 | | NKE-1129-7 | NTG-3225 | | |
| JMR-7225-9X | | NKE-1125-9 | - | | |
| JMR-7225-6X | | NKE-1125-6 | - | | |
| JMR-7225-6XH | | NKE-2254-6HS | - | | AC wide range Input 24VDC (For backup) |
| JMR-7210-6X | | NKE-2103-6 | - | | |
| JMR-7210-6XH | | NKE-2103-6HS | - | | |
| JAN-7201 | ECDIS | - | - | | |
| JAN-7202 | Conning | - | - | | |

* JMR-9272-S and JMR-9282-S/SH are Solid state RADARs.

## Option list of radar antenna

**Table 2.1.6 Option list of radar antenna**

| Name | Model name | Remarks |
|---|---|---|
| Performance monitor | NJU-84 | For S-band radars excluding NKE-1632, 2632 and 2632-H |
| | NJU-85 | For X-band radars |
| 4 unit switching interswitch | NQE-3141-4A | Separate unit |
| 8 unit switching interswitch | NQE-3141-8A | Separate unit (special order) |
| Power control unit | NQE-3167 | Separate unit |

Note:

1. The drive motor for the radar antenna is available in 100-115VAC 50/60 Hz single phase or 220-240VAC 50/60 Hz single phase type for NKE-1632/2632/1139/1130/1129/1125/2254/2103 series. Please specify the power source type when ordering.
2. The radar antenna can be equipped with anti-icing system (neck heater) as an option, and '-D' shall be suffixed to the type name ('-D' or '-E' shall be suffixed to NKE-1632, NKE-2632, and NKE-2632-H.).
   '-D' ・・・ 100 V ac (50/60Hz)
   '-E' ・・・ 220 V ac (50/60Hz)

**Reference:**

The suffix(s) in the type name is/are changed by applying motor voltage, anti-icing system, etc.

(Example) NKE-1130-1D

D: Attached anti-icing system
1: Motor voltage 100-115Vac (50/60Hz)
2: Motor voltage 220-240Vac (50/60Hz)

3. When using the ship's mains of 440VAC as the radar power source, a step-down transformer shall be used.
4. The following are the each unit name on the one's plate:

| | |
|---|---|
| Rader antenna | SCANNER UNIT |
| Transmitter-receiver unit | TRANSMITTER-RECEIVER UNIT |
| Display section | MONITOR UNIT |
| Track ball operation section | TRACK BALL OPERATION UNIT |
| Keyboard operation section | KEYBOARD OPERATION UNIT |
| Central processing section | CENTRAL CONTROL UNIT |
| Power supply section | POWER SUPPLY UNIT |
| Junction box | JUNCTION BOX |
| Rader LAN switch section | RADAR LAN SWITCH UNIT |
| Sensor LAN switch section | SENSOR LAN SWITCH UNIT |
| Cradle frame | CRADLE FRAME |

5. In JMR-9225-9X3/JMR-9225-7X3 and JMR-7225-9X3/JMR-7225-7X3, the following type name of JRC is used for the waveguide between the transmitter-receiver unit and the radar antenna.

| Waveguide | Length | Type name of JRC |
|---|---|---|
| FR-9 | 20MT | H-7AWRD0003 |
| FR-9 | 30MT | H-7AWRD0004 |

6. In JMR-9230-S3 and JMR-7230-S3, the following type name of JRC is used for the coaxial cable between the transmitter-receiver unit and the radar antenna.

| Coaxial cable | Length | Type name of JRC |
|---|---|---|
| HF-20D | 30MT | HF-20D (30MT) |

# 2.2 Power System Diagram

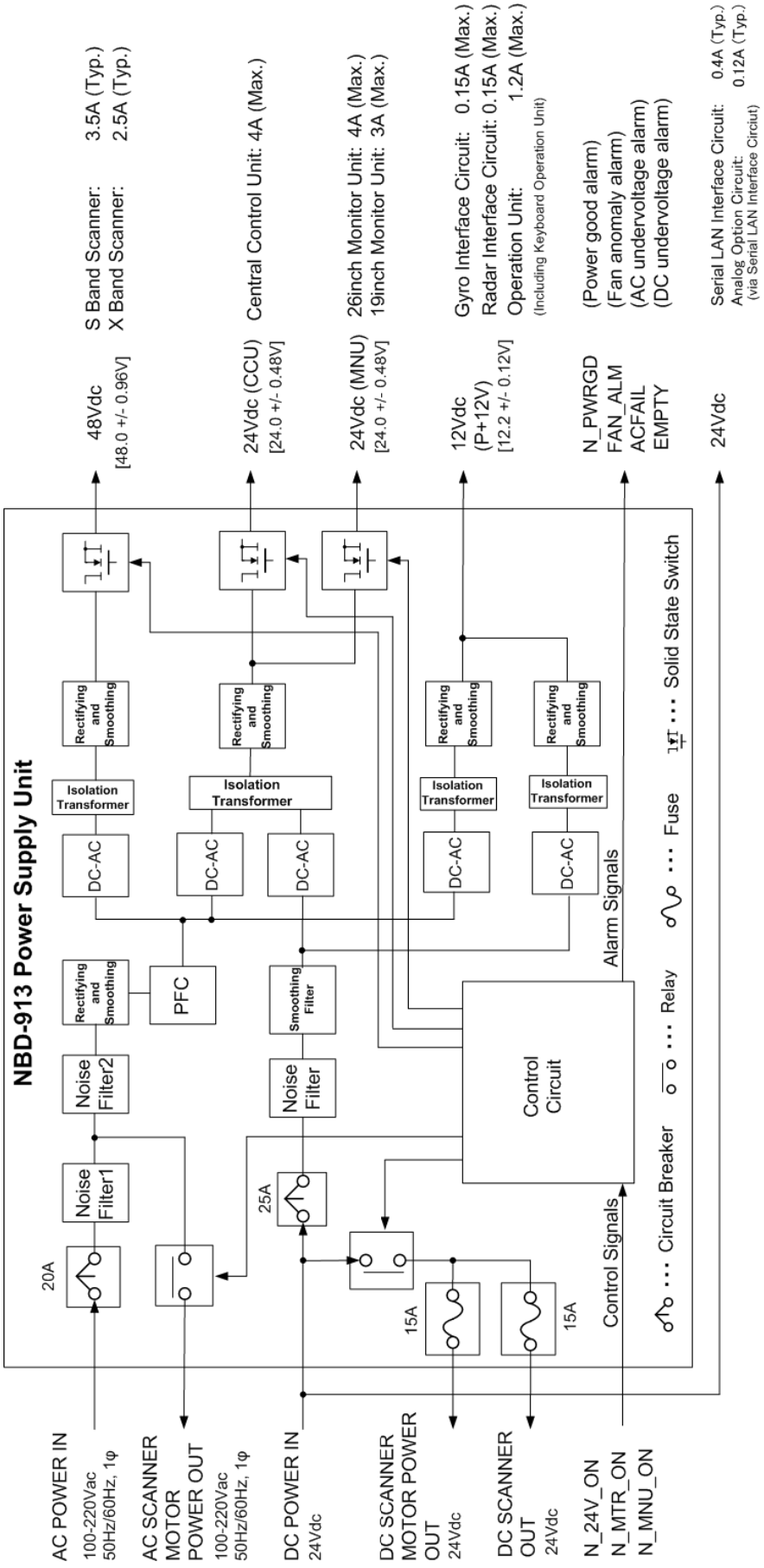


**Fig. 2.2.1 The Power System Diagram**

**Table. 2.2.1 General Specification of Power Supply Unit NBD-913**

| GENERAL SPECIFICATION | NBD-913: Power Supply Unit |
|---|---|
| **AC Input** | |
| Voltage | 100 to 115VAC, 50/60Hz, single phase |
| | 220 to 240VAC, 50/60Hz, single phase |
| Voltage Range | 85 to 264VAC |
| Overvoltage Protection | 295VAC ±2V |
| Input Current | Max 6.8A(100VAC) / 3.4A(220VAC) |
| Over current Protection | YES |
| **DC Input** | |
| Voltage | 24VDC |
| Voltage Range | 21.6 to 31.2VDC |
| Overvoltage Protection | 42V |
| Input Current | Max 16A |
| Over current Protection | YES |
| **Rated Output** | |
| Output 1 | 12.0V ±0.24V 2A |
| Output 2A (for CCU) | 24.0V ±0.48V 4A |
| Output 2B (for MNU) | 24.0V ±0.48V 6A |
| Output 3 (for TXRX) | 48.0V ±0.96V 4A |
| **Mechanical** | |
| Dimension | Width 400 x Depth 240 x Height 85 (mm) |
| Mass | 4.2kg |
| FAN | 2 |
| **Environment** | |
| Operational Temperature | -15°C to +55°C |
| Operational Humidity | 40°C RH 93% |
| Vibration | Sweep 2Hz to 13.2Hz at ± 1mm, 13.2Hz to 100Hz at 7m/s2 and for 2h on each resonance, otherwise 2h at 30Hz in all three axes |
| EMC | IEC60945-Ed4.0 |
| Ingress Protection Rating | IP20 |

The power system diagram is shown in Fig. 2.2.1.

PSU (Power Supply Unit: NBD-913) supplies power to the Scanner Unit and Display Unit which consists of MNU(Monitor Unit), CCU (Central Control Unit), OPU(Operation Unit), and JB(Junction Box). The lists of Input/Output features of the PSU are given in Table 2.2.2 and Table 2.2.3.

**Table 2.2.2 The list of PSU input section**

| Input | Detail |
|---|---|
| **AC Input** | |
| Voltage | 100 to 115Vac<br>220 to 240Vac |
| Voltage ranges | 85 to 264VAC |
| Overvoltage Protection | 295VAC±2V, |
| Frequency | 50Hz / 60Hz |
| Input Current | Max 6.8A(100VAC) / 3.4A(220VAC) |
| Over current Protection | equipped |
| **DC Input** | |
| Voltage | 24Vdc |
| Voltage ranges | 21.6 to 31.2Vdc |
| Overvoltage Protection | 42V |
| Input Current | Max 16A |
| Over current Protection | equipped |
| **Control Signals** | |
| N_24V_ON | CCU power control signal.<br>Open Collector Input.<br>Logic Level L: 24Vdc (CCU) ON. |
| N_MTR_ON | Scanner unit power control signal.<br>Open Collector Input.<br>Logic Level L: 100-220Vac, 48Vdc, 24Vdc (M+. M-), and 24Vdc (1A, 2A) ON. |
| N_MNU_ON | Monitor unit power control signal.<br>Open Collector Input.<br>Logic Level L: 24Vdc (MNU) ON. |

**Table 2.2.3 The list of PSU output section**

| Output | For | Detail |
|---|---|---|
| **AC Output** | | |
| 100-220Vac<br>50/60Hz<br>Single phase | AC Scanner<br>Motor | Through output.<br>Overcurrent protection by a circuit breaker. |
| **DC Output** | | |
| 48Vdc | AC Scanner | Overvoltage and overcurrent protection by a solid state switch. |
| 24Vdc<br>(M+, M-) | DC Scanner<br>Motor | Through output.<br>Overcurrent protection by a blade fuse.(15A) |
| 24Vdc<br>(1A, 2A) | DC Scanner | Through output.<br>Overcurrent protection by a blade fuse.(15A) |
| 24Vdc (CCU) | CCU | Overvoltage and overcurrent protection by a solid state switch. |
| 24Vdc (MNU) | MNU | Overvoltage and overcurrent protection by a solid state switch. |
| 12Vdc<br>(P+12V) | CCU, OPU,<br>GIF, RIF | Standby output. |
| **Alarm Signals** | | |
| AC FAIL | CCU | AC input low voltage alarm.<br>Open Collector Output<br>Logic Level H (within 40ms) :100-220Vac IN is less than 75Vac typ. |
| DC EMPTY | CCU | DC input low voltage alarm.<br>Open Collector Output<br>Logic Level H (within 40ms) : 24Vdc IN is less than 18Vdc typ. |
| FAN_ALM | CCU | Fan anomaly alarm.<br>Open Collector Output<br>Logic Level H: the Fan motor anomaly. |
| N_PWRGD | CCU | Power good signal.<br>Open Collector Output.<br>Logic Level H: PSU has low output voltage under output anomaly ( overvoltage, overcurrent ) or inner temperature anomaly. |

## PSU Input Section

To drive PSU, AC power input, DC power input, and control signal inputs are required.

The ship's AC power supply is input to each stabilized power supply circuit via a circuit breaker and a line filter, and generates the required voltage. If only DC power (24Vdc) is input to PSU, It will not generate 48Vdc. Each power supply circuit is a highly efficient switching power supply circuit.

PSU is equipped with overvoltage protection. If the input voltage exceeds the set upper limit, the circuit breaker trips to prevent the excessive voltage from being applied to the system. It is not necessary to change input voltage setting of 100 or 220Vac because PSU has a wide range AC input.

Control signals are used to control the outputs which are 100-220Vac, 48Vdc, 24Vdc(M+, M-), 24Vdc(1A, 2A), 24Vdc(MNU), 24Vdc(CCU). They are open collector signals.

The control signals are the follows:

| | |
|---|---|
| N_24V_ON | : CCU power control signal |
| N_MTR_ON | : Scanner unit power control signal |
| N_MNU_ON | : Monitor unit power control signal |

## PSU Output Section

The Outputs of PSU are 100-220Vac, 48Vdc, 24Vdc (M+, M-), 24Vdc (1A, 2A), 24Vdc (MNU), 24Vdc (CCU), 12Vdc (P+12V), and alarm signals.

12Vdc (P+12V) power supply operates even when the operating unit is turned off. This power supply is used in functions such as the control circuit of the power supply circuit and the interswitch control function.

When the power switch of OPU is turned on, PSU used in the system is activated and outputs power at the following voltages:

| | |
|---|---|
| 24Vdc (MNU) | : for Monitor Unit |
| 24Vdc (CCU) | : for Central Control Unit |

100-220Vac and 48Vdc power supply for the AC scanner power are output independently from the power for the system itself. When N_MTR_ON the scanner unit power control signal is input from the interswitch unit, 100-220Vac and 48Vdc power supply come on. Where the interswitch function is not used, these actions are linked to the power switch of OPU. 48Vdc power supply is used in the internal control circuit of the AC scanner unit and in the transmitter-receiver unit. It is the same for DC scanner power. In DC scanner, 24Vdc (M+, M-) and 24Vdc (1A, 2A) are used.

Each power supply output has output overcurrent protection, so that if there is a short circuit of the load or the rated output is exceeded, protective functions are activated and shut down the output.

The system is equipped with a function to provide notification that the ship's AC power supply is shut off. Connecting the system to the ship's battery (24V) makes it possible for an alarm to be sounded from the OPU when the ship's AC power supply is shut down.

The alarm signals are the follows:

| | |
|---|---|
| ACFAIL | : AC input undervoltage alarm |
| DC EMPTY | : DC input undervoltage alarm |
| FAN_ALM | : Fan anomaly alarm |
| N_PWRGD | : Power good signal |

# 2.3 Function System Diagrams

## 2.3.1 Scanner unit / transmitter-receiver unit

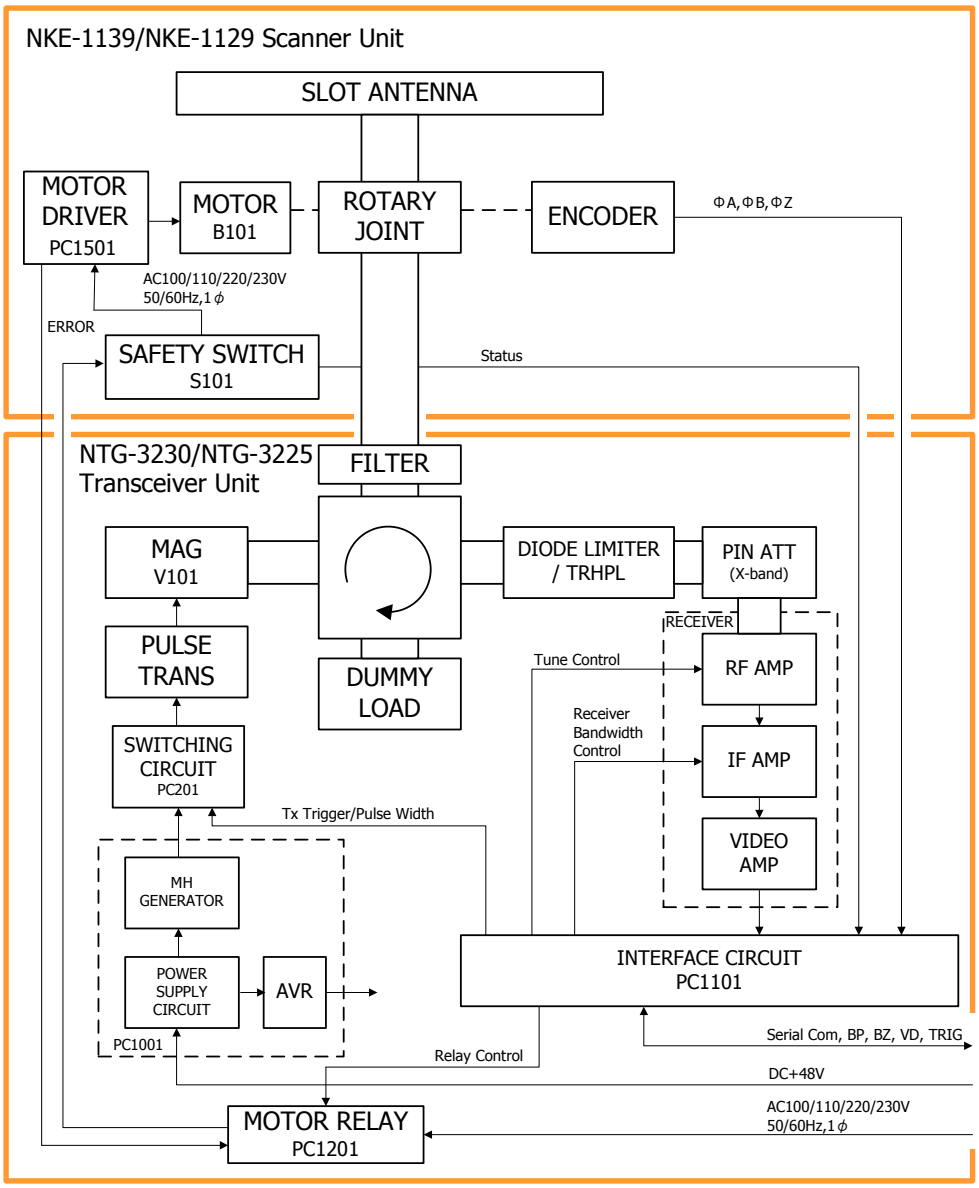


**Fig. 2.3.1 Function Diagram of 3-unit Scanner/Transmitter-Receiver unit**

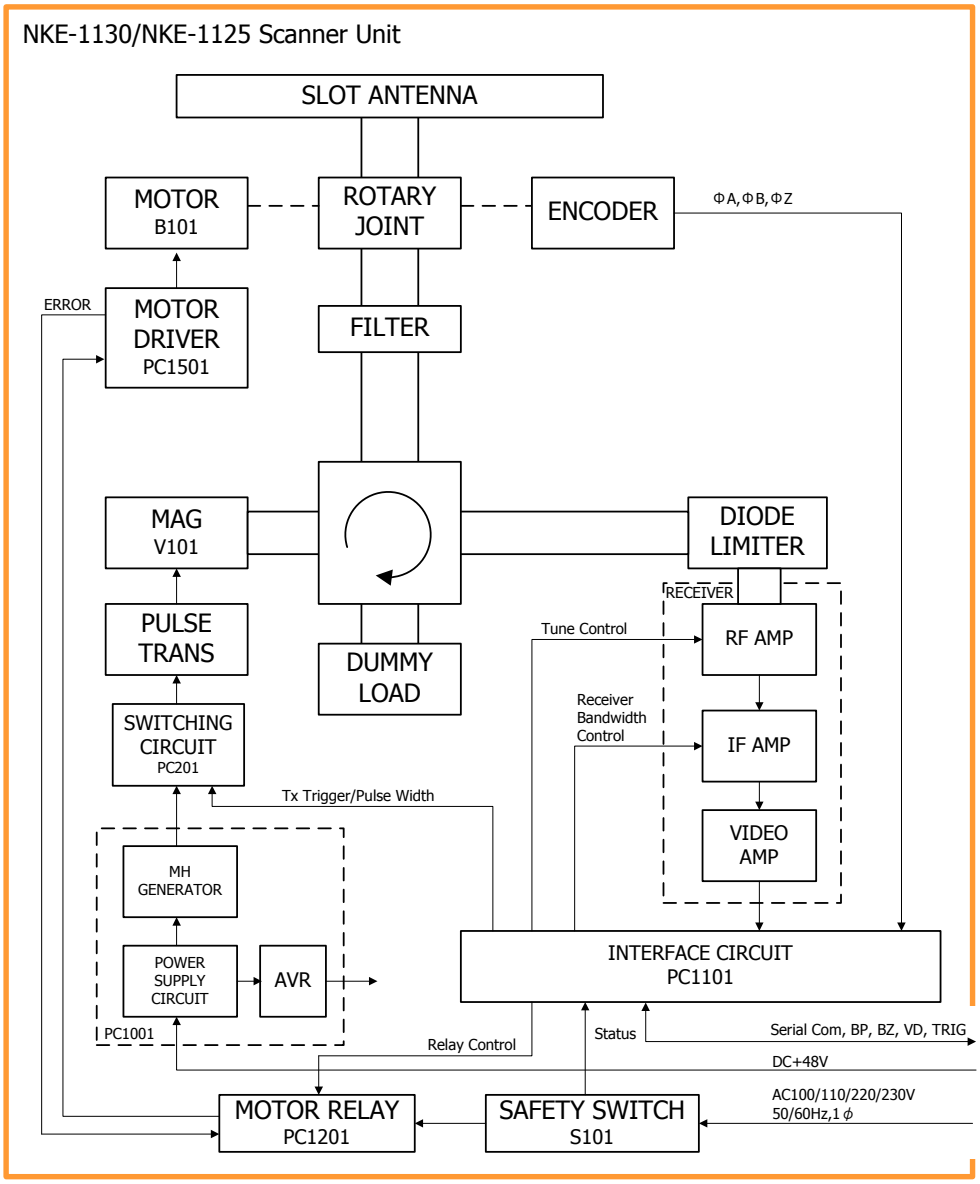


**Fig. 2.3.2 Function Diagram of 2-unit Scanner/Transmitter-Receiver unit**

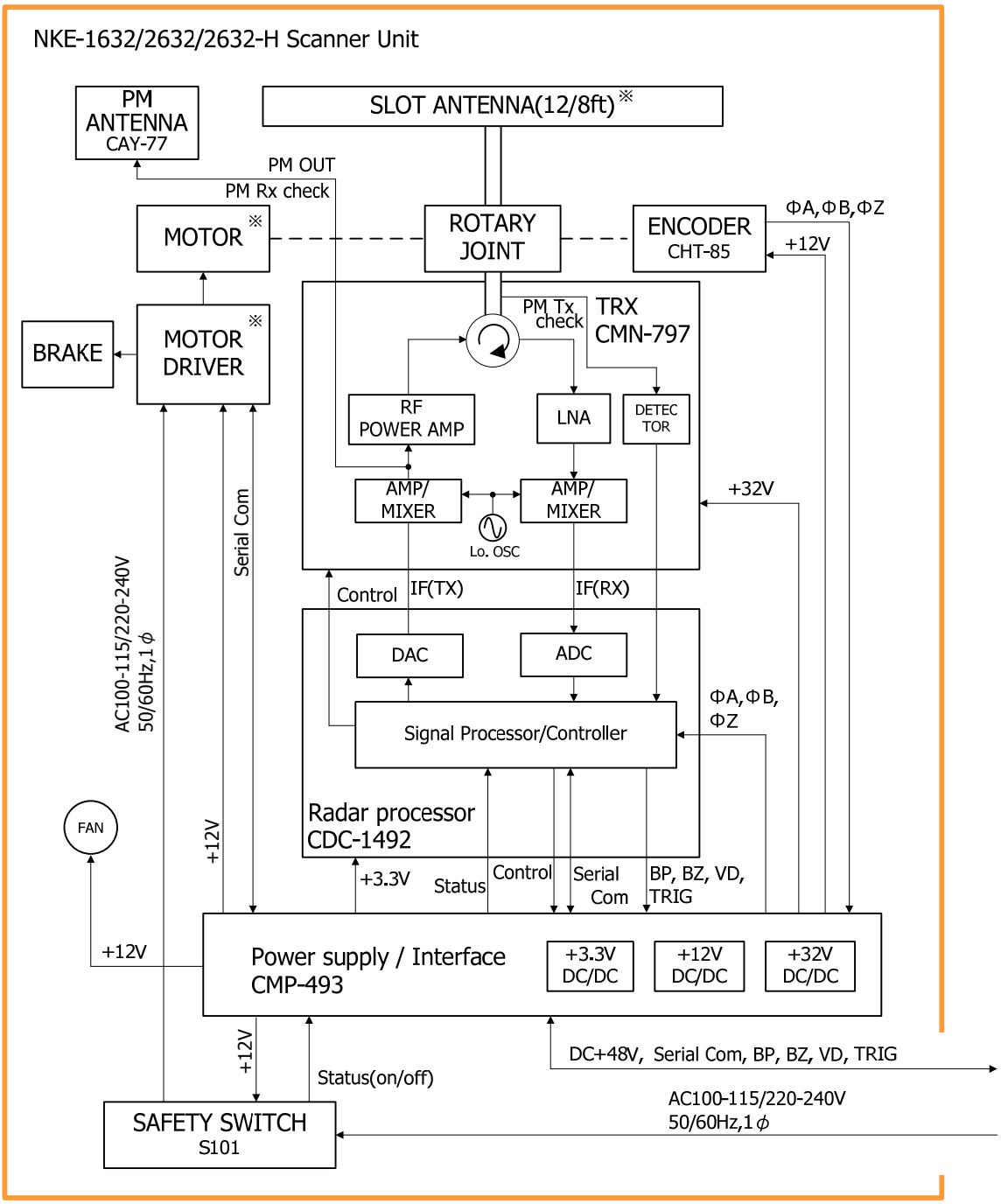


※ SLOT ANTENNA : 12ft(for NKE-1632)
8ft(for NKE-2632/2632-H)

MOTOR : MDBW10832(for NKE-1632/2632)
MDBW10967(for NKE-2632-H)

MOTOR DRIVER : CBD-1949(for NKE-1632/2632)
CBD-1950(for NKE-2632-H)

**Fig. 2.3.3 Function Diagram of Solid state Scanner/Transmitter-Receiver unit**

Fig. 2.3.1, Fig. 2.3.2, and Fig. 2.3.3 show the function system diagram for the scanner unit / transmitter-receiver unit of 3-unit, 2-unit, and 2-unit solid state respectively. In the 3-unit type, the transmitter-receiver unit is installed indoors, away from the scanner unit. In the 2-unit type, the transmitter-receiver unit is installed inside the scanner unit.

## Magnetron Scanner Unit

When the +48V power supply in the display unit starts, the power supply circuit in the transmitter-receiver unit activates and power is supplied to the circuits in the scanner unit and the transmitter-receiver unit. Once the power supply starts, the CPU in the interface circuit starts and perform initial settings. Then the preheating of the magnetron begins, and the transmitter-receiver unit waits for a communication signal to be sent from the display unit. When it receives the communication signal from the display unit, a communication link is established, and the scanner unit and the transmitter-receiver unit are subsequently controlled from the display unit.

While the magnetron is preheating, the interface circuit sets the operation of the various circuits in the transmitter-receiver unit according to the initial setting values it receives from the display unit. When the preheating is complete, the transmitter-receiver unit notifies the display unit. When the user performs the operation to start transmission, the display unit sends the transmission start command via the communication line and the transmitter-receiver unit starts the rotation of the antenna motor and begins transmission.

A transmission timing pulse is generated in the interface circuit, which is input to the modulator switching circuit for high voltage switching. The pulse transformer further increases the voltage of the high-voltage pulse, and the high voltage is applied to the magnetron. In this way, pulse-modulated microwaves are obtained. The pulse width of the radar wave and the pulse-repetition frequency are specified by means of control commands from the display unit.

The radar wave passes through a duplexer circuit that uses a circulator and then through a rotary joint, before being transmitted into the air from the antenna. A signal reflected from a target is input from the antenna to the receiving block using the duplexer function. The received signal is amplified before being converted to the IF frequency, after which logarithmic detection is performed and the signal becomes a radar video signal. If the receiving tuning function is set to the auto mode, the interface circuit processes the received signal and automatically controls the tuning voltage so as to match the optimum local frequency.

When the interface circuit turns on the scanner unit relay, AC power is supplied to the motor driver circuit and the antenna motor rotates. If the safety switch is off, the power supplied to the motor driver is forcibly shut off, stopping the rotation of the antenna motor. The beam azimuth of the antenna is detected by the encoder.

The received radar video signal, the transmission timing signal, and the antenna rotation signal are all sent to the display unit. The radar video signal is an unprocessed log-compressed signal. The antenna rotation signal is an incremental signal which uses the 2048 pulse/rotation pulse and the azimuth reference pulse.

When a set period of time has elapsed after the communication signal from the display unit has

stopped, the interface circuit switches to the protection mode and forcibly stops transmission and the rotation of the antenna.

When the radiator is subjected to external force of wind (corresponding wind speed is greater than 51.5m/s) that exceed the ability to drive the scanner unit, the scanner unit stop to drive the motor. Because a built-in overload protection circuit is activated. If the scanner unit rotates by the wind in a counterclockwise direction, the TXRX[Reverse] alarm will be appeared, and stop to transmit. If the scanner unit rotates by the wind in a clockwise direction, the scanner unit stops to drive the motor. Therefore the TXRX[AZI] alarm will be appeared when the wind is calm down.

When the corresponding wind speed is less than or equal to 51.5m/s, the break circuit (in the scanner unit) can reduce the scanner rotation speed to 11rpm less than, therefore the radar can transmit normally.

## Solid state Scanner Unit

Fig. 2.3.3 shows the Function diagram of Solid state scanner unit.

Solid state scanner unit consists of motor drive unit, transceiver/receiver unit, and power supply unit. It constructs 2-unit type marine radar equipment by connecting with the display unit.

When the +48V power supply in the display unit starts, the power supply circuit in the solid state scanner unit activates and power is supplied to each circuits of it. Once the power supply starts, the CPU in the Radar processor unit CDC-1492 starts and performs initial settings. Then it waits for a communication signal to be sent from the display unit. Solid state scanner does not need preheating. When it receives the communication signal from the display unit, a communication link is established, and the scanner units are subsequently controlled from the display unit.

When the Radar processor received range table data that includes information such as the pulse width of the radar wave and the pulse-repetition frequency, it starts the function setting sequence corresponding to designated transmission and reception spec. When the function setting sequence is finished, the Radar processor notifies the transmission and reception preparation completion status to the display unit.

When the user performs the operation to start transmission, the display unit sends the transmission start command via the communication line and the scanner unit starts the rotation of the antenna motor and begins transmission.

Since solid state scanner unit does not use a magnetron, it needs no preheating. Therefore, it can begin transmission and reception immediately after the end of above settings. In this time, the transmission control signals such as the transmission trigger signal that synchronized with the transmission IF signal flow together, and perform the operation timing control of TRX module. The transmission IF signal consists of unmodulated pulse signal P0N and frequency modulation pulse signal Q0N.

TRX module performs time division transmission control. That allows P0N narrow pulse width signal to be used for detection at the range scale which would be the blind echo in the main-bang of Q0N wide pulse width signal. Transmission RF signal is amplified to approx.250W peak-power by the power amplifier unit constituted of RF FETs, and it is outputs as the transmission signal from TRX module via circulator. This signal is input to the antenna port via coaxial cable, and then it is transmitted into the air from the antenna.

A part of the signal is reflected from a target and received by the antenna. The signal received by the antenna propagates the coaxial cable which is the same as transmitting, and it is input to receiver unit of the TRX module as the reception signal via the circulator.

After amplification the signal level by Low Noise Amplifier, the reception RF signal that is input to the receiver unit is downconverted into the reception IF signal by frequency converter unit. Then it is amplified to desired signal level again, flows into the AD converter via the BPF of the radar processor.

The digital signal that has converted by the AD converter is supplied to the Radar processor, and it undergoes the digital signal processing such as pulse compression processing, coherent integration processing, and, P0N and Q0N transmission synthesis processing. After conversion into analog signal by the DA converter, this processed digital signal is input to the display unit as the radar video signal. Simultaneously, the bearing pulse signal, the heading line signal, and the transmission trigger signal are input together.

The performance monitor function that monitors the degradation state of transmission and reception performance of the radar equipment is follows. In order to monitor the transmission system, the level detector unit monitors the output level of the power amplifier unit. In order to monitor the reception system, the radar antenna monitors the reception level of the PM signal which is emitted to the air by the TRX module via the PM antenna CAY-77.

Since AC power for the motor driven is supplied via the safety switch, it can be forced outage of the motor when it is turned off under maintenance. The state of the safety switch is always monitored as the status signal, and it is sent to the display unit. Though the motor and motor driver circuit are varied by the Radar antenna type, the setting of motor power 100Vac or 220Vac is set by jumper plug of the motor driver circuit.

## 2.3.2 Display unit

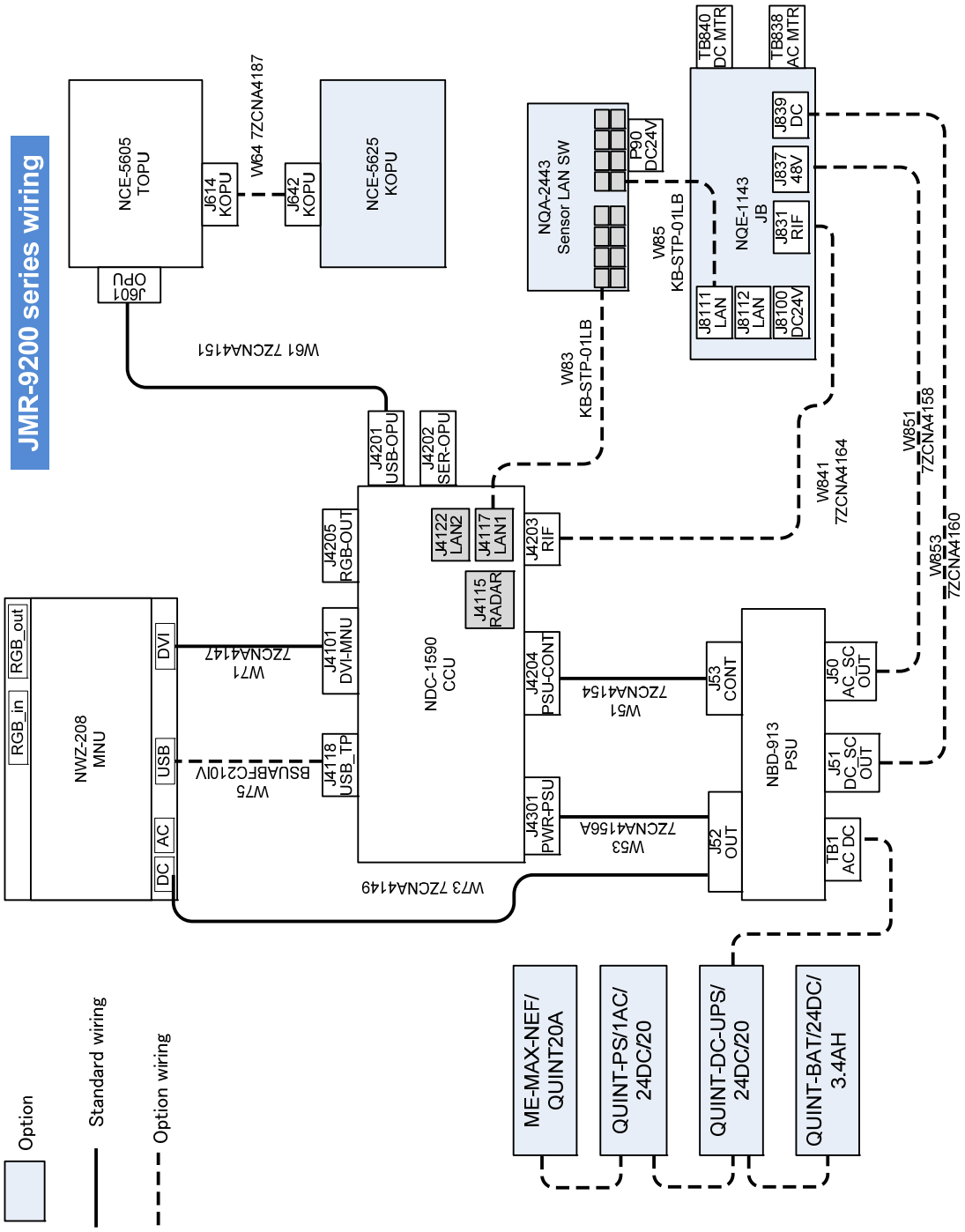


**Fig. 2.3.4 Block diagram of Display unit (26inch)**

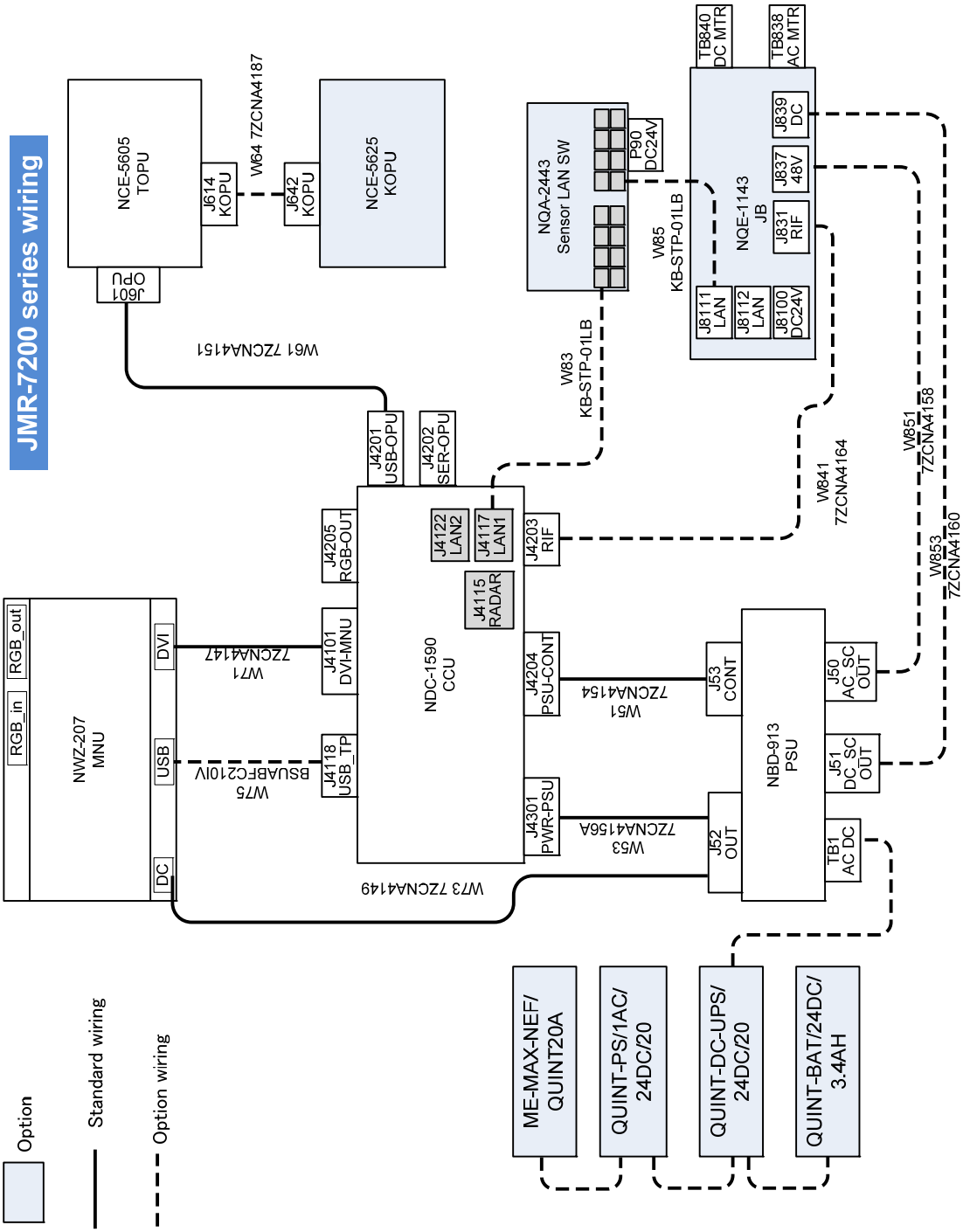


**Fig. 2.3.5 Block diagram of Display unit (19inch)**

The function system diagram of Display Unit is shown in Fig. 2.3.4 and Fig. 2.3.5

Display Unit is composed of following units:

| | |
|---|---|
| MNU : Monitor Unit | NWZ-208 (26inch) |
| | NWZ-207 (19inch) |
| CCU : Central Control Unit | NDC-1590 |
| PSU : Power Supply Unit | NBD-913 |
| TOPU : Trackball Operation Unit | NCE-5605 |
| KOPU : Keyboard Operation Unit | NCE-5625(*) |
| Sensor LAN Switch Unit | NQA-2443(*) |
| JB : Junction Box | NQE-1143(*), (**) |

(*) Option.

(**) JB may include following circuits and they depend on the system:

| | |
|---|---|
| SLC : Serial LAN Interface Circuit | CMH-2370 |
| AOC : Analog Option Circuit | CMJ-560 |
| GIF : Gyro Interface Circuit | CMJ-554 |
| RIF : Radar Interface Circuit | CQD-2273 |

## Starting the system

Turning on the power switch of TOPU starts PSU, 24Vdc (MNU) and 24Vdc (CCU) are supplied to MNU and CCU respectively. After starting its OS up, CCU initializes the various parameters and DSPs and it provides the functions such as Radar processing and display function, Electronic Chart Display function, Ship's sensors Information display function and more.

After that, CCU sets the internal status according to the sensor data input from the various communication lines, such as the GYRO and GPS, and issues an initialization command to the transmitter-receiver unit via the communication line to initialize the transmitter-receiver unit. This concludes the initialization of the system.

## Circuit functions

**Operation circuit** detects the operating status of the switches and dials of the TOPU and KOPU and sends the operation data to the CCU through the communication line.

**SLC : Serial LAN Interface Circuit** converts serial signals sent by ship's various sensors into LAN data packets. It sends that signal to CCU via an Ethernet cable.

**AOC : Analog Option Circuit** mediates Ship's analog sensor signals to CCU via SLC. It has four input ports. You can choose the kind of input type for each port which are -10V to 10V voltage input or 4-20mA current loop input.

**GIF : Gyro Interface Circuit** processes the gyro signal, which is in the synchro or step format, calculates the true azimuth, and sends the true azimuth data to the radar processing circuit at regular intervals using serial communication. As long as the GIF circuit is receiving the gyro signal,

it is supplied with power and the CPU operates even if the display unit power is turned off. Therefore, even if the display unit power is turned off, the GIF circuit can continue to calculate the true azimuth.

**RIF : Radar Interface Circuit** mediates radar signals from transmitter-receiver unit or interswitch unit to CCU. Also, it mediates the power such as 100-220Vac, 48Vdc, and 24Vdc from PSU to scanner motor and transmitter-receiver unit.

## Basic radar operations

In magnetron radar, the preheating of the magnetron of the transmitter-receiver unit is required. It takes several tens of seconds. When the preheating of the magnetron is complete, the display unit will be on standby state for transmitting. In solid state radar, no preheating is required. the display unit will be standby state at the same time as starting up.

By clicking the TX/STBY button in the screen or pressing that button on the KOPU, the system will be in transmission state. CCU issues a start transmission command to the transmitter-receiver unit, the transmitter-receiver unit starts transmitting, and the antenna starts to rotate. The radar signals sent by the transmitter-receiver unit are input to CCU via RIF. Unwanted waves are suppressed by powerful DSPs and advanced signal processing technologies. The radar image will always be displayed optimal in every range.

The switches and dials on KOPU can be used to change the settings of the signal processing in CCU and the screen display, the results of which are immediately reflected in the radar image display.

## Interswitch Function

The interswitch NQE-3141 allows the user to freely switch the connections between multiple display units and the scanner unit, so that even if there is a problem with one display unit, the operation of the system as a whole is maintained. For example, without the interswitch function, if a problem occurred in the No.1: S-band display unit, it would become impossible to use the S band radar, which would affect maritime safety in adverse weather conditions. With the inter switch function, however, it is possible to connect the functioning No. 1 scanner unit to the No. 2 display unit, and continue to use S band radar. The inter switch is easily operated from the radar screen.

CCU automatically detects, when the system is started, whether or not there is an interswitch. If there is, it operates in the interswitch mode. If there is no inter switch, or if the interswitch or its cable is damaged, preventing the inter switch from being detected, CCU automatically operates in the standalone mode.

# 2.4 I/O Specifications

## 2.4.1. CCU : Central Control Unit NDC-1590 I/O Specifications

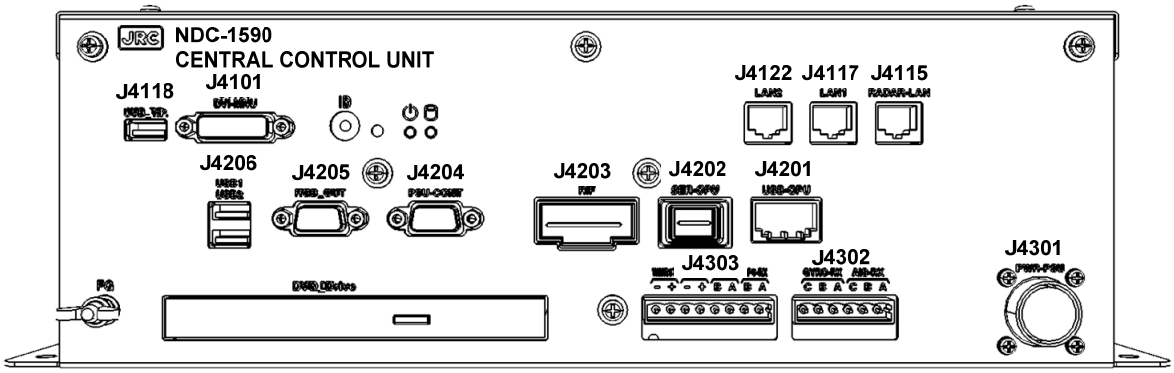


**Fig. 2.4.1 CCU front view**

**Table 2.4.1 CCU I/O specifications 1**

| Label | Name | Pin | Signal Name | I/O | Specification | Detail |
|---|---|---|---|---|---|---|
| J4101 | DVI-MNU | — | DVI-MNU | I/O | DVI-D WUXGA | Internal wiring |
| J4118 | USB. T.P. | — | USB. T.P. | I/O | USB 2.0 | Internal wiring |
| J4201 | USB-OPU | — | USB-OPU | I/O | Operation Unit | Internal wiring |
| J4202 | SER-OPU | — | SER-OPU | I/O | Operation Unit | Internal wiring |
| J4203 | CCU-RIF | — | CCU-RIF | I/O | Radar Interface Circuit | Internal wiring |

## Table 2.4.2 CCU I/O specifications 2

| Label | Name | Pin | Signal Name | I/O | Specification | Detail |
|---|---|---|---|---|---|---|
| J4204 | PSU-CONT | 1 | AC FAIL | IN | Open Collector Input | 3.3Vdc, 10k ohm Internal Pull-up. |
| | | 2 | DC EMPTY | IN | Open Collector Input | 3.3Vdc, 10k ohm Internal Pull-up. |
| | | 3 | FAN ALM | IN | Open Collector Input | 3.3Vdc, 10k ohm Internal Pull-up. |
| | | 4 | N_PWRGD | IN | Open Collector Input | 3.3Vdc, 10k ohm Internal Pull-up. |
| | | 5 | SG | - | - | - |
| | | 6 | SG | - | - | - |
| | | 7 | N_24V_ON | OUT | Open Collector Output | Logic level L: 24Vdc (Motor) ON |
| | | 8 | N_MTR_ON | OUT | Open Collector Output | Logic level L: ACOUT_L/N and 48Vdc ON |
| | | 9 | N_MNU_ON | OUT | Open Collector Output | Logic level L: 24Vdc(MNU) ON |
| J4206 | USB1 USB2 | — | USB1 USB2 | I/O | USB 2.0 | Internal wiring |

## Table 2.4.3 CCU I/O specifications 3

| Label | Name | Pin | Signal Name | I/O | Specification | Detail |
|---|---|---|---|---|---|---|
| J4303 | GPS-RX | A | GPS-RX | IN | IEC61162-1 A | See Fig. 2.4.2 CCU GPS-RX detail |
| | | B | | IN | IEC61162-1 B | |
| | SDME-RX | A | SDME-RX | IN | IEC61162-1 A | See Fig. 2.4.3 CCU SDME-RX detail |
| | | B | | IN | IEC61162-1 B | |
| | PWR FAIL | + | PWR FAIL | — | Dry Contact Out Normally-closed (Factory default) | Choose Normally-open/ closed by TB2. See Fig. 2.4.4 CCU PWR FAIL detail |
| | | - | | — | | |
| | WMRST | + | WMRST | — | Dry Contact Out Normally-open (Factory default) | Choose Normally-open/ closed by TB2. See Fig. 2.4.5 CCU WMRST detail |
| | | − | | — | | |

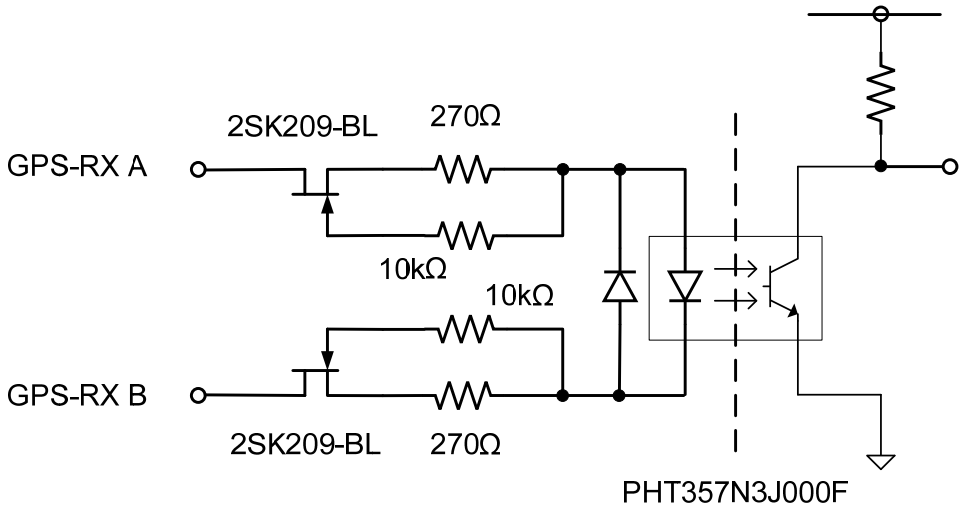


**Fig. 2.4.2 CCU GPS-RX detail**

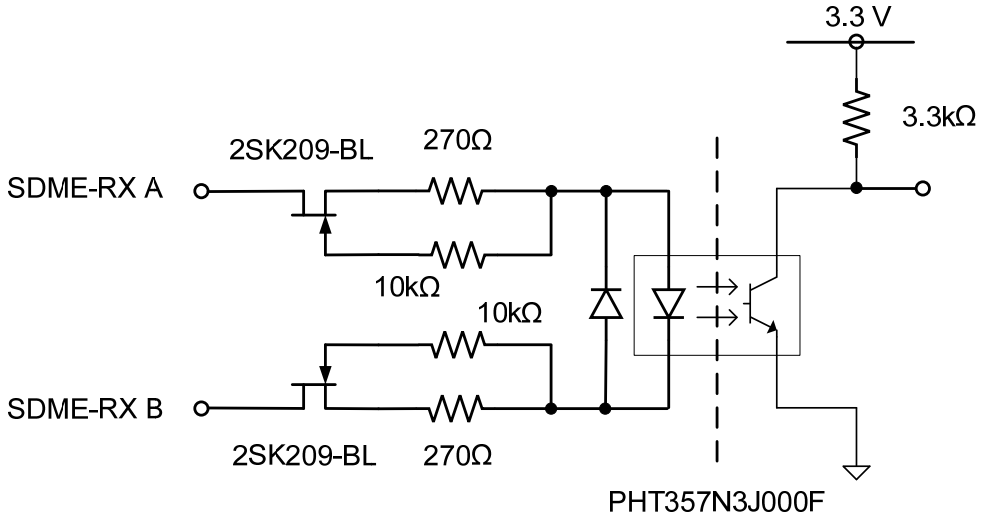


**Fig. 2.4.3 CCU SDME-RX detail**

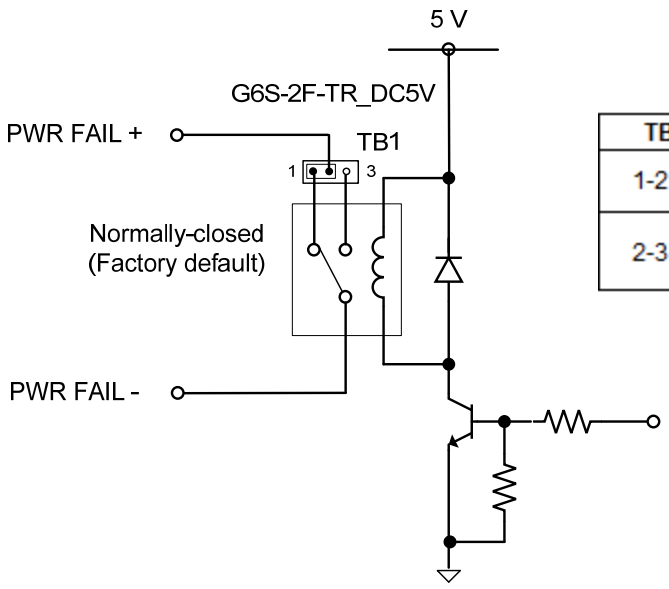


| TB1 settings | Description |
|---|---|
| 1-2 short circuit | Normally-closed (Factory default) |
| 2-3 short circuit | Normally-open |

**Fig. 2.4.4 CCU PWR FAIL detail**

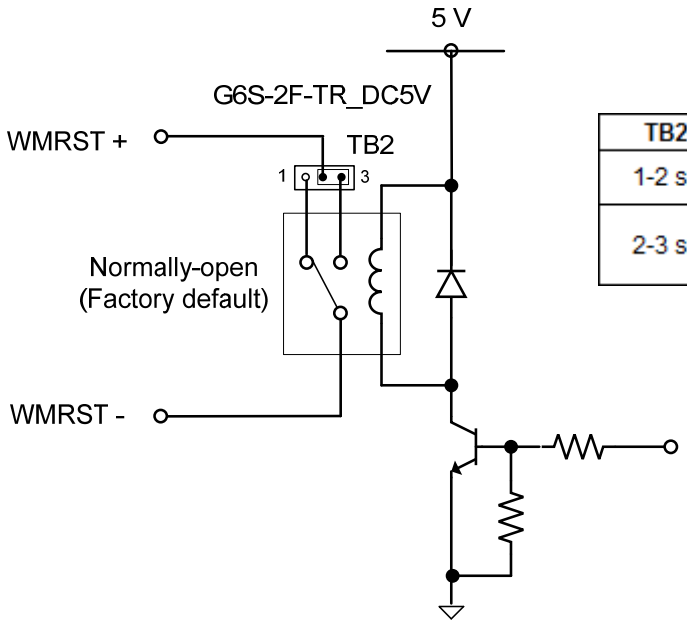


| TB2 settings | Description |
|---|---|
| 1-2 short circuit | Normally-closed |
| 2-3 short circuit | Normally-open (Factory default) |

**Fig. 2.4.5 CCU WMRST detail**

## Table 2.4.4 CCU I/O specifications 4

| Label | Name | Pin | Signal Name | I/O | Specification | Detail |
|---|---|---|---|---|---|---|
| J4302 | AIS-RX | A | AIS-RX | IN | IEC61162-2 A | By TB5, choose Termination enabled or disabled. See Fig. 2.4.6 CCU AIS-RX detail |
| | | B | | IN | IEC61162-2 B | |
| | | C | | — | IEC61162-2 C | |
| | GYRO-RX | A | GYRO-RX | IN | IEC61162-2 A | By TB6, choose Termination enabled or disabled. See Fig. 2.4.7 CCU GYRO-RX detail |
| | | B | | IN | IEC61162-2 B | |
| | | C | | — | IEC61162-2 C | |

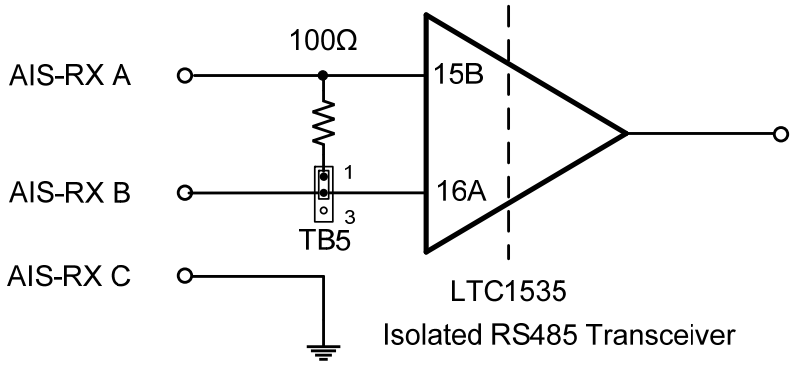


| TB5 settings | Termination resistor |
|---|---|
| 1-2 short circuit | 100 ohm termination resistor. (Factory default) |
| 2-3 short circuit | OFF |

**Fig. 2.4.6 CCU AIS-RX detail**

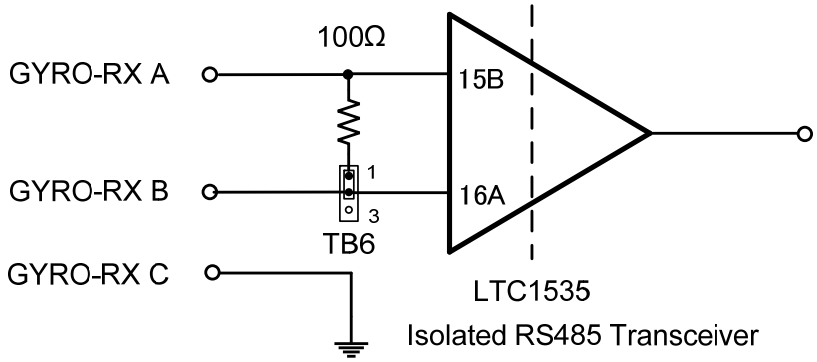


| TB6 settings | Termination resistor |
|---|---|
| 1-2 short circuit | 100 ohm termination resistor. (Factory default) |
| 2-3 short circuit | OFF |

**Fig. 2.4.7 CCU GYRO-RX detail**

## Table 2.4.5 CCU I/O specifications 5

| Label | Name | Pin | Signal Name | I/O | Specification | Detail |
|---|---|---|---|---|---|---|
| J4301 | PWR-PSU | 1 | P+12V | IN | 12Vdc | 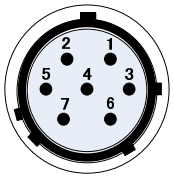 <br>CCU Front View |
| | | 2 | P+12VE | IN | Common wire for P+12V | |
| | | 3 | +24V | IN | 24Vdc | |
| | | 4 | +24V | IN | | |
| | | 5 | +24VE | IN | Common wire for +24V | |
| | | 6 | +24VE | IN | | |
| | | 7 | F.G. | IN | F.G. | |
| J4115 | RADAR-LAN | - | - | I/O | IEC61162-450 | 10BASE-T / 100BASE-TX / 1000BASE-T |
| J4117 | LAN1 | - | - | I/O | IEC61162-450 | 10BASE-T / 100BASE-TX / 1000BASE-T |
| J4122 | LAN2 | - | - | I/O | IEC61162-450 | 10BASE-T / 100BASE-TX / 1000BASE-T |

## 2.4.2. PSU : Power Supply Unit NBD-913 I/O specifications

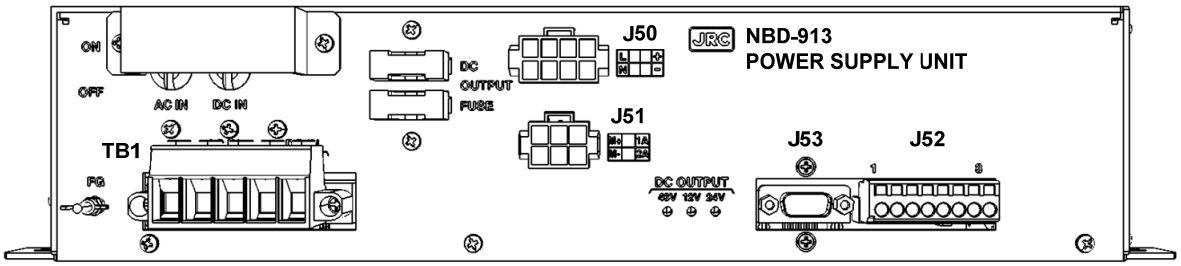


**Fig. 2.4.8 PSU front view**

**Table 2.4.6 PSU I/O specifications 1**

| Label | Name | Pin | Signal Name | I/O | Specification | Detail |
|---|---|---|---|---|---|---|
| TB1 | ACIN | 1 | AC IN : L | IN | 100-220Vac , 50/60Hz, Single phase | Overvoltage protection by a circuit breaker |
| | | 2 | AC IN : N | IN | | |
| | N.C. | 3 | - | - | N.C. | - |
| | DCIN | 4 | DC IN + | IN | 24Vdc + | Overvoltage protection by a circuit breaker |
| | | 5 | DC IN - | IN | 24Vdc - | |
| J50 | AC SCANNER POWER | 1 | ACOUT: L | OUT | 100-220Vac, 50/60Hz, single phase | - |
| | | 2 | N.C. | - | N.C. | - |
| | | 3 | + | OUT | 48Vdc + | - |
| | | 4 | N.C. | - | N.C. | - |
| | | 5 | ACOUT: N | OUT | 100-220Vac, 50/60Hz, single phase | - |
| | | 6 | F.G. | - | F.G. | - |
| | | 7 | - | OUT | 48Vdc - | - |
| | | 8 | N.C. | - | N.C. | - |

## Table 2.4.7 PSU I/O specifications 2

| Label | Name | Pin | Signal Name | I/O | Specification | Detail |
|---|---|---|---|---|---|---|
| J51 | DC SCANNER POWER | 1 | M+ | OUT | 24Vdc + (Motor) | 15A Fuse |
| | | 2 | N.C. | - | N.C. | - |
| | | 3 | 1A | OUT | 24Vdc + | 15A Fuse |
| | | 4 | M- | OUT | 24Vdc - (Motor) | - |
| | | 5 | N.C. | - | N.C. | - |
| | | 6 | 2A | OUT | 24Vdc - | - |
| J52 | CCU_MNU POWER | 1 | 24V | OUT | 24Vdc+ (MNU) | - |
| | | 2 | GND | - | 24Vdc- (MNU) | - |
| | | 3 | F.G. | - | F.G. | - |
| | | 4 | 24V | OUT | 24Vdc+ (CCU) | - |
| | | 5 | GND | - | 24Vdc- (CCU) | - |
| | | 6 | 12V | OUT | P+12V + | - |
| | | 7 | GND | - | P+12V - | - |
| | | 8 | F.G. | - | F.G. | - |

## Table 2.4.8 PSU I/O specifications 3

| Label | Name | Pin | Signal Name | I/O | Specification | Detail |
|---|---|---|---|---|---|---|
| J53 | PSU_CONT | 1 | AC FAIL | OUT | Open Collector Output | Logic level H (within 40ms) : AC IN is less than 75Vac typ. |
| | | 2 | DC EMPTY | OUT | Open Collector Output | Logic level H (within 40ms) : DC IN is less than 18Vdc typ. |
| | | 3 | FAN ALM | OUT | Open Collector Output | Logic level H: The Fan motor anomaly. |
| | | 4 | N_PWRGD | OUT | Open Collector Output | Logic level H: PSU has low output voltage under output anomaly such as overvoltage, overcurrent or inner temperature anomaly.<br><br>It is enabled while N_MTR_ON is L. If it is H, N_PWRGD is forced to be L except under inner temperature anomaly. |
| | | 5 | SG | - | - | - |
| | | 6 | SG | - | - | - |
| | | 7 | N_24V_ON | IN | Open Collector Input | Logic level L: 24Vdc (CCU) ON |
| | | 8 | N_MTR_ON | IN | Open Collector Input | Logic level L: ACOUT(L/N), 48Vdc(+,-), 24Vdc(M+, M-), and 24Vdc(1A, 2A) ON |
| | | 9 | N_MNU_ON | IN | Open Collector Input | Logic level L: 24Vdc (MNU) ON |

## 2.4.3. SLC : Serial LAN Interface Circuit CMH-2370

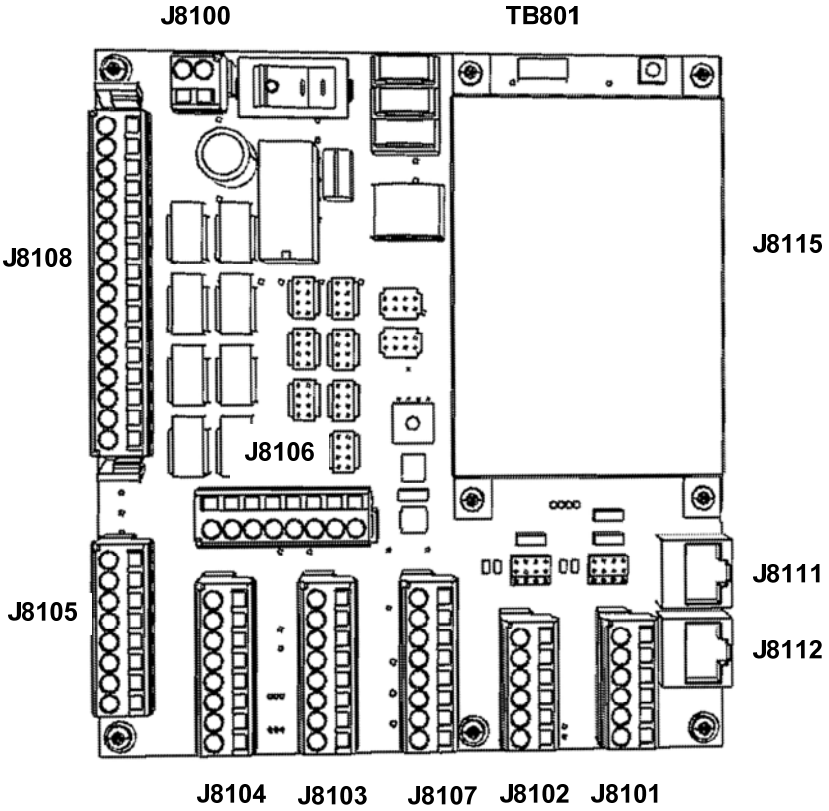


**Fig. 2.4.9 SLC top view**

**Table 2.4.9 SLC I/O specifications 1**

| Label | Name | Pin | Signal Name | I/O | Specification | Detail |
|---|---|---|---|---|---|---|
| J8100 | DC24V IN | 1 | 24V+ | POWER | 21.6Vdc to 31.2Vdc 400mA(Typ.) | Reverse connection protection by 3A blade fuses (FS1, FS2). |
| | | 2 | 24V_GND | | | |

## Table 2.4.10 SLC I/O specifications 2

| Label | Name | Pin | Signal Name | I/O | Specification | Detail |
|---|---|---|---|---|---|---|
| J8101 | IEC61162-2 Ch.1 | 1 | TX10A | OUT | IEC61162-2 A | By TB3, choose full duplex mode or half duplex mode.<br><br>By TB15, Choose Termination enabled or disabled.<br><br>See Fig. 2.4.10 SLC IEC61162-2 TXRX detail |
| | | 2 | TX10B | OUT | IEC61162-2 B | |
| | | 3 | TX10C | - | IEC61162-2 C | |
| | | 4 | RX10A | IN | IEC61162-2 A | |
| | | 5 | RX10B | IN | IEC61162-2 B | |
| | | 6 | RX10C | - | IEC61162-2 C | |
| J8102 | IEC61162-2 Ch.0 | 1 | TX9A | OUT | IEC61162-2 A | By TB2, choose full duplex mode or half duplex mode.<br><br>By TB14, Choose Termination enabled or disabled.<br><br>See Fig. 2.4.10 SLC IEC61162-2 TXRX detail |
| | | 2 | TX9B | OUT | IEC61162-2 B | |
| | | 3 | TX9C | - | IEC61162-2 C | |
| | | 4 | RX9A | IN | IEC61162-2 A | |
| | | 5 | RX9B | IN | IEC61162-2 B | |
| | | 6 | RX9C | - | IEC61162-2 C | |

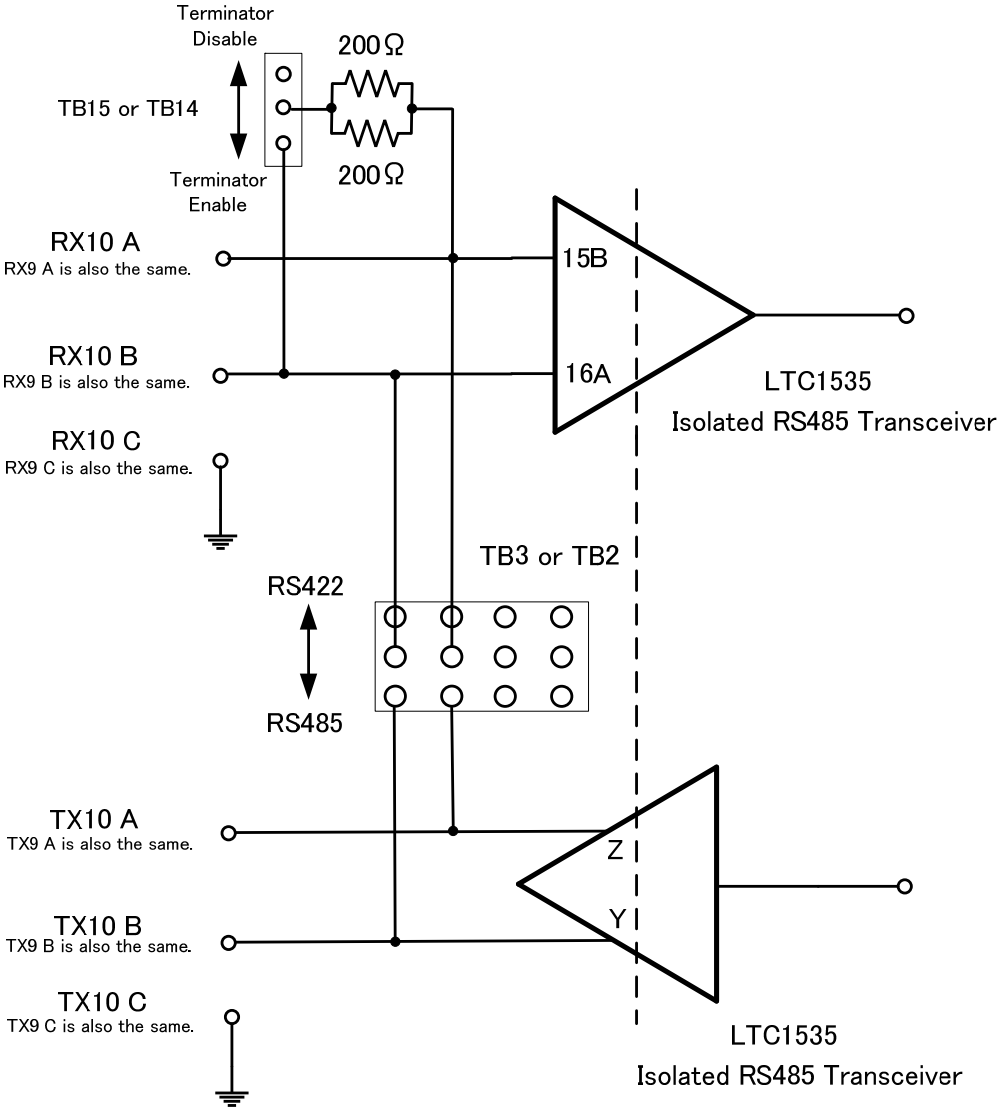


**Fig. 2.4.10 SLC IEC61162-2 TXRX detail**

## Table 2.4.11 SLC I/O specifications 3

| Label | Name | Pin | Signal Name | I/O | Specification | Detail |
|---|---|---|---|---|---|---|
| J8105 | IEC61162-1 1/2 | 1 | RX1A | IN | IEC61162-1 A | See Fig. 2.4.11 SLC IEC61162-1 RX1 detail |
| | | 2 | RX1B | IN | IEC61162-1 B | |
| | | 3 | TX1A | OUT | IEC61162-1 A | See Fig. 2.4.12 SLC IEC61162-1 TX1 detail |
| | | 4 | TX1B | OUT | IEC61162-1 B | |
| | | 5 | RX2A | IN | IEC61162-1 A | See Fig. 2.4.11 SLC IEC61162-1 RX1 detail |
| | | 6 | RX2B | IN | IEC61162-1 B | |
| | | 7 | TX2A | OUT | IEC61162-1 A | See Fig. 2.4.12 SLC IEC61162-1 TX1 detail |
| | | 8 | TX2B | OUT | IEC61162-1 B | |
| J8104 | IEC61162-1 3/4 | 1 | RX3A | IN | IEC61162-1 A | See Fig. 2.4.11 SLC IEC61162-1 RX1 detail |
| | | 2 | RX3B | IN | IEC61162-1 B | |
| | | 3 | TX3A | OUT | IEC61162-1 A | See Fig. 2.4.12 SLC IEC61162-1 TX1 detail |
| | | 4 | TX3B | OUT | IEC61162-1 B | |
| | | 5 | RX4A | IN | IEC61162-1 A | See Fig. 2.4.11 SLC IEC61162-1 RX1 detail |
| | | 6 | RX4B | IN | IEC61162-1 B | |
| | | 7 | TX4A | OUT | IEC61162-1 A | See Fig. 2.4.12 SLC IEC61162-1 TX1 detail |
| | | 8 | TX4B | OUT | IEC61162-1 B | |

## Table 2.4.12 SLC I/O specifications 4

| Label | Name | Pin | Signal Name | I/O | Specification | Detail |
|---|---|---|---|---|---|---|
| J8103 | IEC61162-1 5/6 | 1 | RX5A | IN | IEC61162-1 A | See Fig. 2.4.11 SLC IEC61162-1 RX1 detail |
| | | 2 | RX5B | IN | IEC61162-1 B | |
| | | 3 | TX5A | OUT | IEC61162-1 A | See Fig. 2.4.12 SLC IEC61162-1 TX1 detail |
| | | 4 | TX5B | OUT | IEC61162-1 B | |
| | | 5 | RX6A | IN | IEC61162-1 A | See Fig. 2.4.11 SLC IEC61162-1 RX1 detail |
| | | 6 | RX6B | IN | IEC61162-1 B | |
| | | 7 | TX6A | OUT | IEC61162-1 A | See Fig. 2.4.12 SLC IEC61162-1 TX1 detail |
| | | 8 | TX6B | OUT | IEC61162-1 B | |
| J8106 | IEC61162-1 7/8 | 1 | RX7A | IN | IEC61162-1 A | See Fig. 2.4.11 SLC IEC61162-1 RX1 detail |
| | | 2 | RX7B | IN | IEC61162-1 B | |
| | | 3 | TX7A | OUT | IEC61162-1 A | See Fig. 2.4.12 SLC IEC61162-1 TX1 detail |
| | | 4 | TX7B | OUT | IEC61162-1 B | |
| | | 5 | RX8A | IN | IEC61162-1 A | See Fig. 2.4.11 SLC IEC61162-1 RX1 detail |
| | | 6 | RX8B | IN | IEC61162-1 B | |
| | | 7 | TX8A | OUT | IEC61162-1 A | See Fig. 2.4.12 SLC IEC61162-1 TX1 detail |
| | | 8 | TX8B | OUT | IEC61162-1 B | |

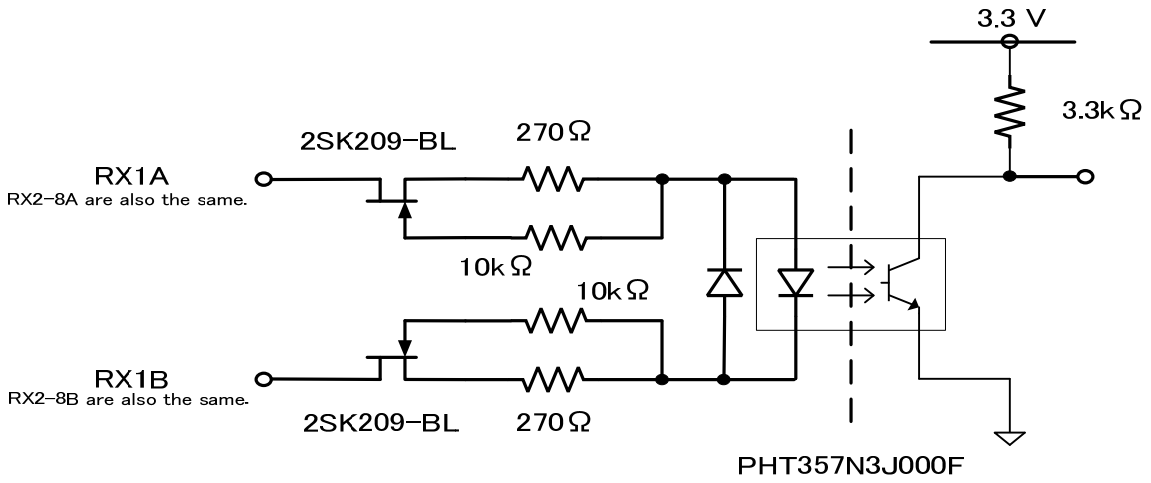


**Fig. 2.4.11 SLC IEC61162-1 RX1 detail**

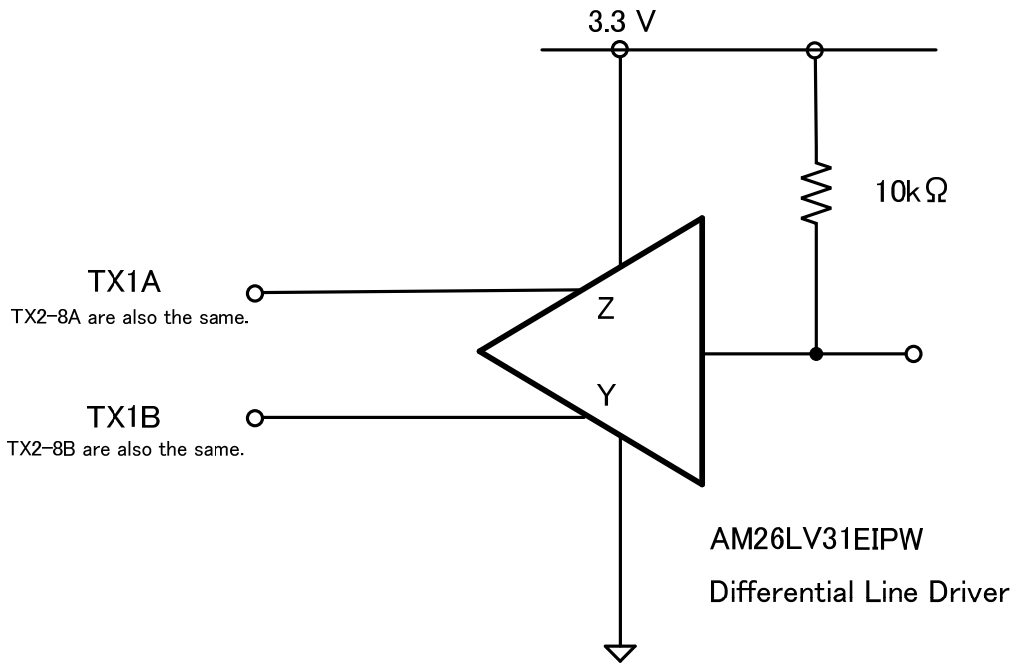


**Fig. 2.4.12 SLC IEC61162-1 TX1 detail**

## Table 2.4.13 SLC I/O specifications 5

| Label | Name | Pin | Signal Name | I/O | Specification | Detail |
|---|---|---|---|---|---|---|
| J8107 | Contact In | 1 | IN1 | IN | Dry Contact Input 5V/50mA | 5V, 1k ohm Internal Pull-up. See Fig. 2.4.13 SLC Contact In detail. |
| | | 2 | GND | - | | |
| | | 3 | IN2 | IN | | |
| | | 4 | GND | - | | |
| | | 5 | IN3 | IN | | |
| | | 6 | GND | - | | |
| | | 7 | IN4 | IN | | |
| | | 8 | GND | - | | |

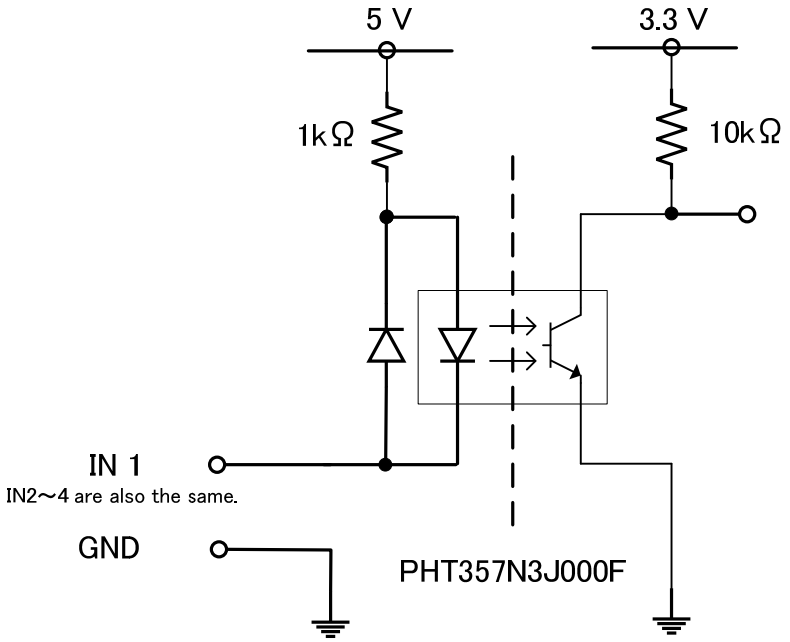


**Fig. 2.4.13 SLC Contact In detail**

## Table 2.4.14 SLC I/O specifications 6

| Label | Name | Pin | Signal Name | I/O | Specification | Detail |
|---|---|---|---|---|---|---|
| J8108 | Contact Out | 1 | OUT1 | - | Dry Contact 1 or 24V Supply 1 for Buzzer Max. 2A | Choose Normally Open, Normally Close, or 24VDC by TB6. See Fig. 2.4.14 SLC Contact Out detail. |
| | | 2 | RET1 | - | | |
| | | 3 | OUT2 | - | Dry Contact 2 or 24V Supply 2 for Buzzer Max. 2A | Choose Normally Open, Normally Close, or 24VDC Output by TB7. See Fig. 2.4.14 SLC Contact Out detail. |
| | | 4 | RET2 | - | | |
| | | 5 | OUT3 | - | Dry Contact 3 or 24V Supply 3 for Buzzer Max. 2A | Choose Normally Open, Normally Close, or 24VDC Output by TB8. See Fig. 2.4.14 SLC Contact Out detail. |
| | | 6 | RET3 | - | | |
| | | 7 | OUT4 | - | Dry Contac 4 or 24V Supply 4 for Buzzer Max. 2A | Choose Normally Open, Normally Close, or 24VDC Output by TB9. See Fig. 2.4.14 SLC Contact Out detail. |
| | | 8 | RET4 | - | | |

## Table 2.4.15 SLC I/O specifications 7

| Label | Name | Pin | Signal Name | I/O | Specification | Detail |
|---|---|---|---|---|---|---|
| J8108 | Contact Out | 9 | OUT5 | - | Dry Contact 5 or 24V Supply 5 for Buzzer Max. 2A | Choose Normally Open, Normally Close, or 24VDC Output by TB17. See Fig. 2.4.14 SLC Contact Out detail. |
| | | 10 | RET5 | - | | |
| | | 11 | OUT6 | - | Dry Contact 6 or 24V Supply 6 for Buzzer Max. 2A | Choose Normally Open, Normally Close, or 24VDC Output by TB16. See Fig. 2.4.14 SLC Contact Out detail. |
| | | 12 | RET6 | - | | |
| | | 13 | OUT7 | - | Dry Output 7 or 24V Supply 7 for Buzzer Max. 2A | Choose Normally Open, Normally Close, or 24VDC Output by TB11. See Fig. 2.4.14 SLC Contact Out detail. |
| | | 14 | RET7 | - | | |
| | | 15 | OUT8 | - | Dry Contact 8 or 24V Supply 8 for Buzzer Max. 2A | Choose Normally Open, Normally Close, or 24VDC Output by TB10. See Fig. 2.4.14 SLC Contact Out detail. |
| | | 16 | RET8 | - | | |

These 24Vdc output for buzzer are overcurrent protected by a common 15A blade fuse. (FS3)

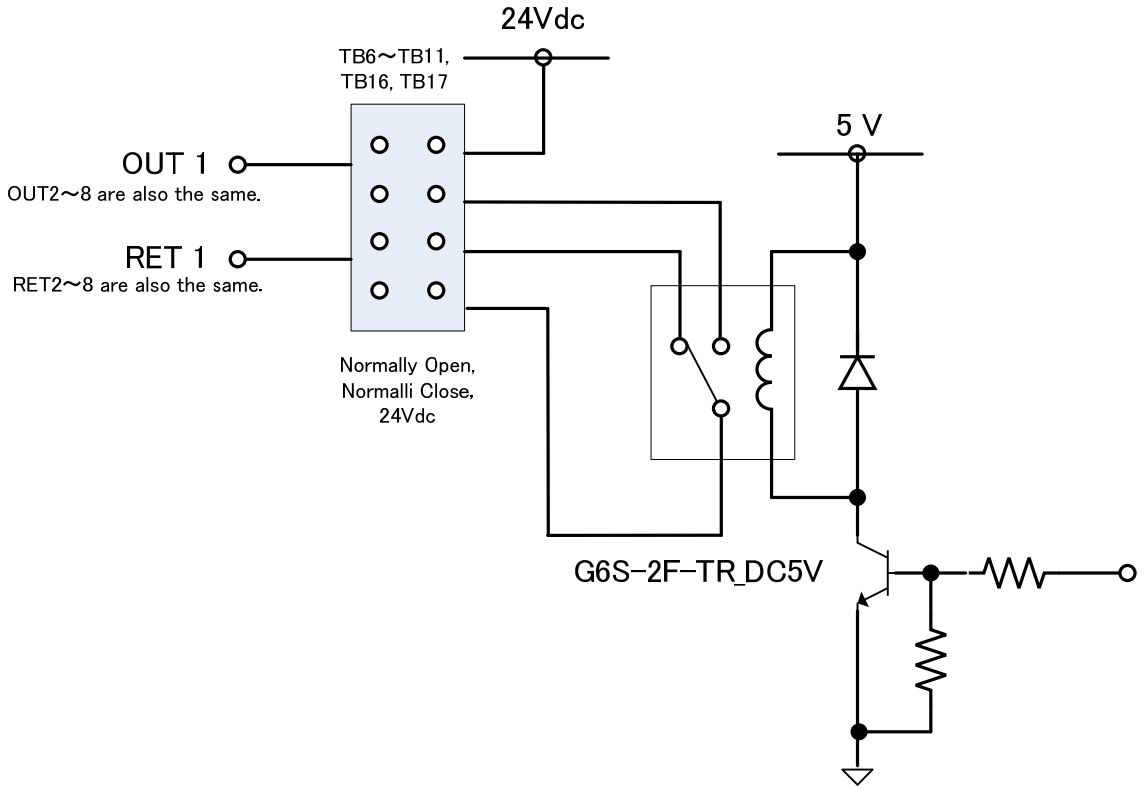


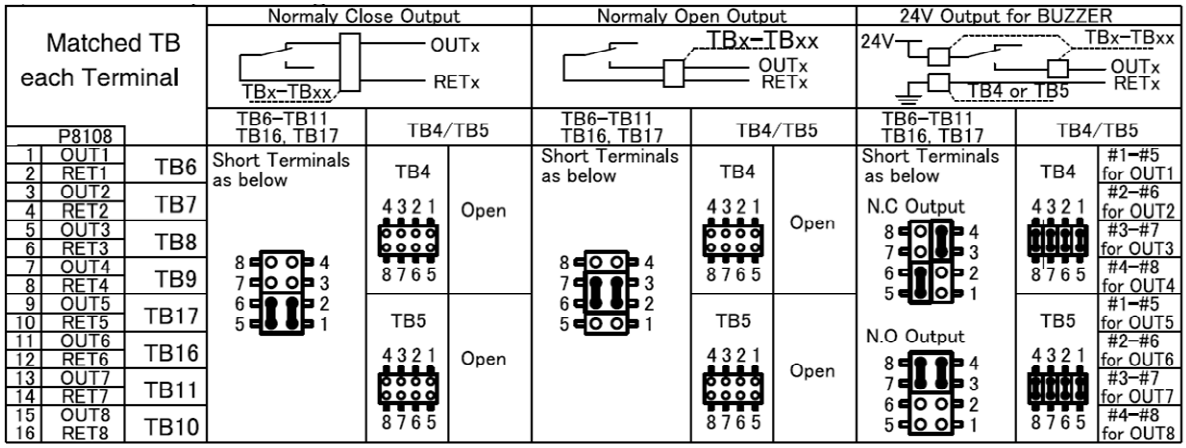


**Fig. 2.4.14 SLC Contact Out detail.**

## Table 2.4.16 SLC I/O specifications 8

| Label | Name | Pin | Signal Name | I/O | Specification | Detail |
|---|---|---|---|---|---|---|
| J8111 | LAN ch.0 | - | - | I/O | IEC61162-450 | 10BASE-T / 100BASE-TX |
| J8112 | LAN ch.1 | - | - | I/O | IEC61162-450 | 10BASE-T / 100BASE-TX |
| J8115 | GIF_SLC | - | - | I/O | Gyro Interface Circuit | Internal wiring |
| TB801 | SLC-AOC | - | - | I/O | Analog Option Circuit | Internal wiring |

Note: The number of LAN port that you can use is only 1 port, either J8111 or J8112.

## 2.4.4. AOC : Analog Option Circuit CMJ-560 I/O specifications

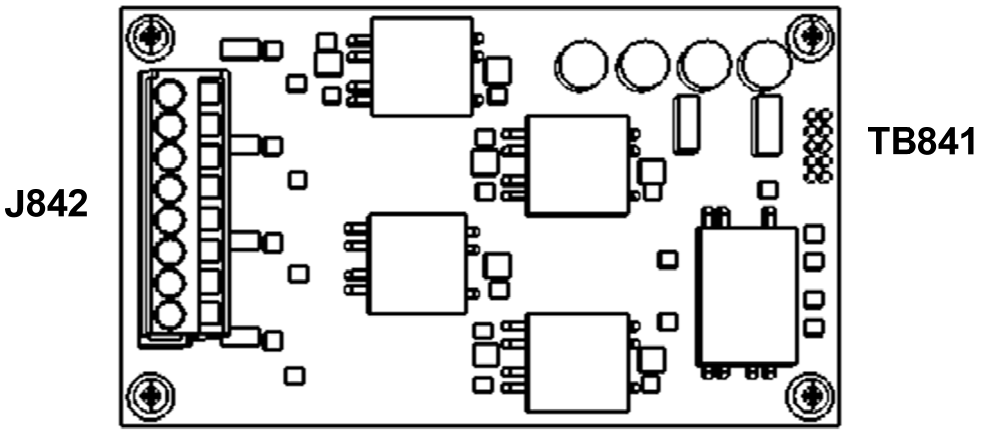


**Fig. 2.4.15 AOC top view**

**Table 2.4.17 AOC I/O specifications 1**

| Label | Name | Pin | Signal Name | I/O | Specification | Detail |
|---|---|---|---|---|---|---|
| TB841 | AOC_SLC | - | - | I/O | Serial LAN Circuit | Internal wiring |

## Table 2.4.18 AOC I/O specifications 2

| Label | Name | Pin | Signal Name | I/O | Specification | Detail |
|---|---|---|---|---|---|---|
| J842 | Analog Sensor Input | 1 | AN1+ | IN | +/- 10V Input or 4-20mA Current Loop Input | Choose +/- 10V Input or 4-20mA Input by TB2, TB6, and TB7. See Fig. 2.4.16 and 2.5 DIP-SW and Jumper Pin Settings. |
| | | 2 | AN1- | IN | | |
| | | 3 | AN2+ | IN | +/- 10V Input or 4-20mA Current Loop Input | Choose +/- 10V Input or 4-20mA Input by TB3, TB6, and TB7.. See Fig. 2.4.16 and 2.5 DIP-SW and Jumper Pin Settings. |
| | | 4 | AN2- | IN | | |
| | | 5 | AN3+ | IN | +/- 10V Input or 4-20mA Current Loop Input | Choose +/- 10V Input or 4-20mA Input by TB4, TB6, and TB7.. See Fig. 2.4.16 and 2.5 DIP-SW and Jumper Pin Settings. |
| | | 6 | AN3- | IN | | |
| | | 7 | AN4+ | IN | +/- 10V Input or 4-20mA Current Loop Input | Choose +/- 10V Input or 4-20mA Input by TB5, TB6, and TB7.. See Fig. 2.4.16 and 2.5 DIP-SW and Jumper Pin Settings. |

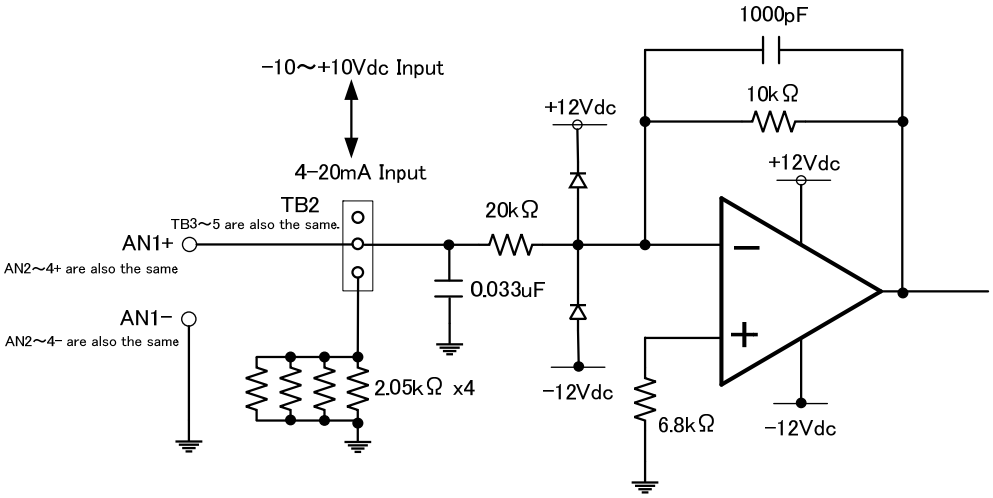


**Fig. 2.4.16 AOC input detail.**

## 2.4.5. GIF : Gyro Interface Circuit CMJ-554 I/O specifications

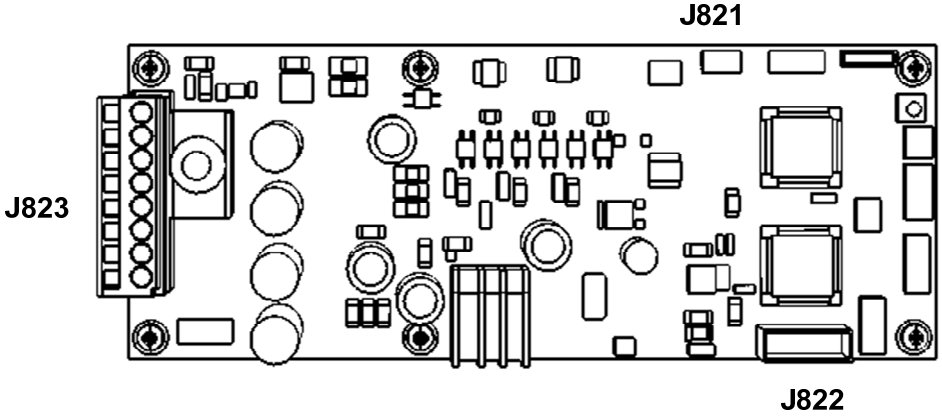


**Fig. 2.4.17 GIF top view**

**Table 2.4.19 GIF I/O specifications 1**

| Label | Name | Pin | Signal Name | I/O | Specification | Detail |
|---|---|---|---|---|---|---|
| J821 | SLC_GIF | - | - | I/O | Serial LAN Circuit | Internal wiring |
| J822 | RIF_GIF | - | - | I/O | Radar Interface Circuit | Internal wiring |

## Table 2.4.20 GIF I/O specifications 2

| Label | Name | Pin | Signal Name | I/O | Specification | Detail |
|---|---|---|---|---|---|---|
| J823 | Gyro | 1 | 1_R1 | IN | Synchro/Step Gyro Compass Input | Choose Sync Gyro or Step Gyro Input by TB1.<br><br>Sync Gyro: AC24 - 115V (50 / 60 / 400Hz)<br>Step Gyro: DC21.6 - 70V<br><br>36x / 90x / 180x / 360x |
| | | 2 | 2_S1 | IN | | |
| | | 3 | 3_S2 | IN | | |
| | | 4 | S3 | IN | | |
| | | 5 | 5_R2 | IN | | |
| | - | 6 | N.C. | - | N.C. | - |
| | Log | 7 | P+ | IN | Pulse Log Input | 0-50V, Vth = 2V.<br>5V, 1k ohm Internal Pull-up<br>100p / 200p / 400p/ 800p<br><br>See Fig. 2.4.18 GIF Log Input detail. |
| | | 8 | P- | IN | | |

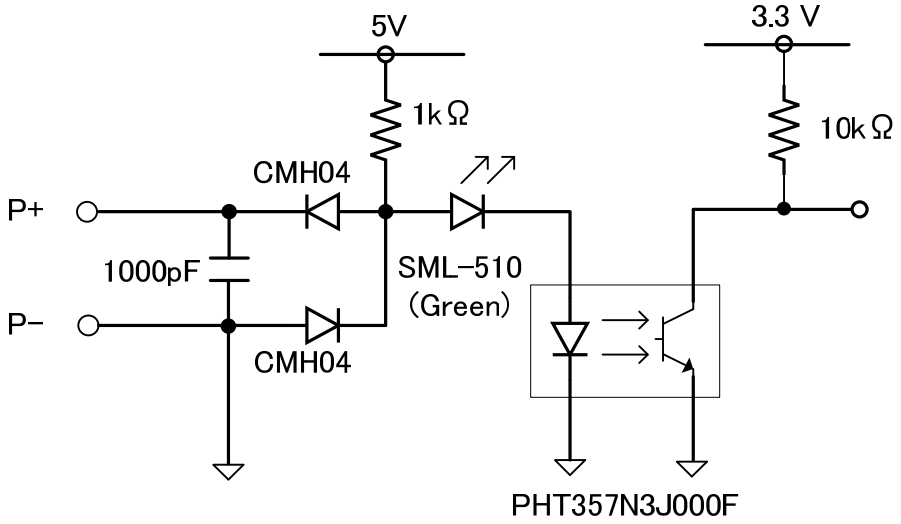


**Fig. 2.4.18 GIF Log Input detail.**

## 2.4.6. RIF :Radar Interface Circuit CQD-2273 I/O specifications

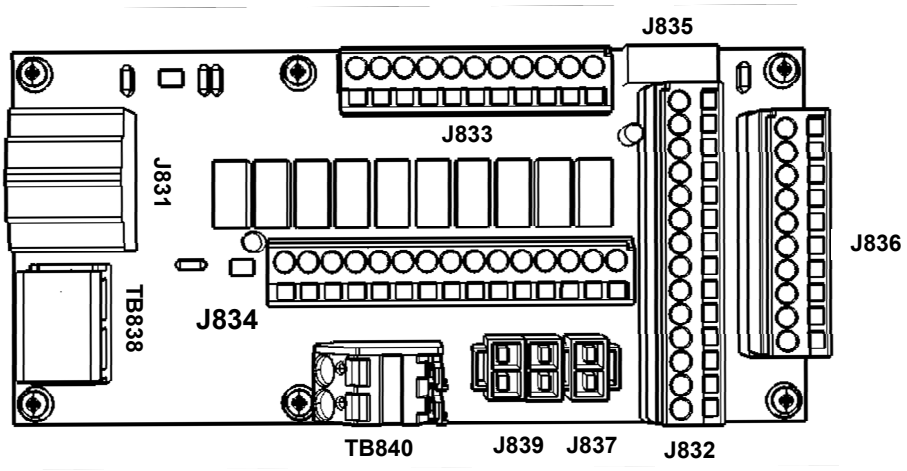


**Fig. 2.4.19 SLC Contact In detail**

**Table 2.4.21 RIF I/O specifications 1**

| Label | Name | Pin | Signal Name | I/O | Specification | Detail |
|---|---|---|---|---|---|---|
| J831 | CCU I/F | - | CCU I/F | I/O | Central Control Unit | Internal wiring |

## Table 2.4.22 RIF I/O specifications 2

| Label | Name | Pin | Signal Name | I/O | Specification | Detail |
|---|---|---|---|---|---|---|
| J832 | SCANNER | 1 | VD+ | IN | Radar Video Signal.<br>0 to -2.6V<br>(except NKE-2103)<br><br>0 to -1.8V (NKE-2103) | See Fig. 2.4.20<br>RIF VD TRG signals detail. |
| | | 2 | VD- | IN | | |
| | | 3 | TRG+ | IN | Radar Trigger Signal<br>0 to +13.6V (min. 10.6V) | Pulse Width :<br>1us to 4.4us<br><br>See Fig. 2.4.20<br>RIF VD TRG signals detail. |
| | | 4 | TRG- | IN | | |
| | | 5 | BP+ | IN | Bearing Pulse<br>0 to +5V, Pull-up | 2048 pulses /<br>1 rotation<br><br>See Fig. 2.4.21<br>RIF BP BZ signals detail |
| | | 6 | BP- | IN | | |
| | | 7 | BZ+ | IN | Bearing Zero<br>Open Collector Input. | 1 pulse / 1 rotation<br>5V, 510ohm<br>Internal Pull-up.<br><br>See Fig. 2.4.21<br>RIF BP BZ signals detail |
| | | 8 | BZ- | IN | | |
| | | 9 | MTR+ | I/O | RS-485, UART<br>9600 to 38400 bps<br>Start bit: 1bit<br>Stop bit: 2bits<br>Parity bit: Even Parity<br>Data bit: 8bits | - |
| | | 10 | MTR- | I/O | | |
| | | 11 | MTRG | - | | |
| | | 12 | N.C. | - | N.C. | - |
| | | 13 | DC+ | OUT | 48Vdc<br>or<br>24Vdc | Depends on<br>the Scanner Type |
| | | 14 | DC- | OUT | | |

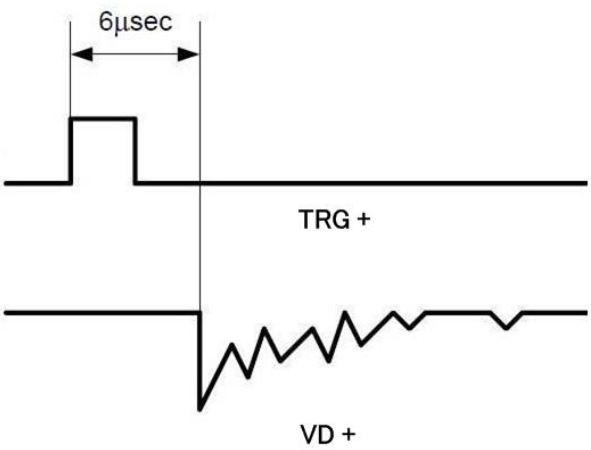


**Fig. 2.4.20 RIF VD TRG signals detail**

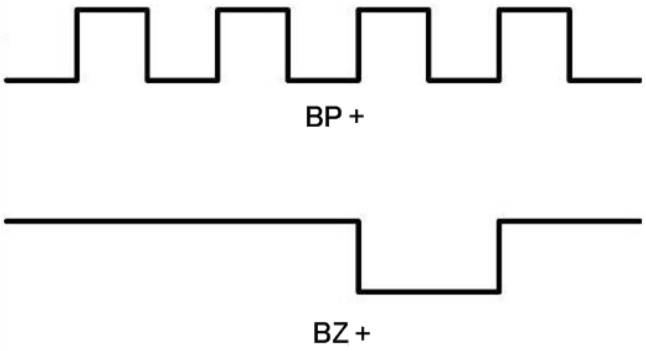


**Fig. 2.4.21 RIF BP BZ signals detail**

## Table 2.4.23 RIF I/O specifications 3

| Label | Name | Pin | Signal Name | I/O | Specification | Detail |
|---|---|---|---|---|---|---|
| J833 | ISW_OUT | 1 | ISWO_VD+ | OUT | Interswitch Unit | - |
| | | 2 | ISWO_VD- | OUT | | |
| | | 3 | ISWO_TRG+ | OUT | | |
| | | 4 | ISWO_TRG- | OUT | | |
| | | 5 | ISWO_BP+ | OUT | | |
| | | 6 | ISWO_BP- | OUT | | |
| | | 7 | ISWO_BZ+ | OUT | | |
| | | 8 | ISWO_BZ- | OUT | | |
| | | 9 | ISWO_MTR+ | I/O | | |
| | | 10 | ISWO_MTR- | I/O | | |
| | | 11 | ISWO_MTRG | I/O | | |
| J834 | ISW_IN | 1 | ISWI_VD+ | IN | Interswitch Unit | - |
| | | 2 | ISWI_VD- | IN | | |
| | | 3 | ISWI_TRG+ | IN | | |
| | | 4 | ISWI_TRG- | IN | | |
| | | 5 | ISWI_BP+ | IN | | |
| | | 6 | ISWI_BP- | IN | | |
| | | 7 | ISWI_BZ+ | IN | | |
| | | 8 | ISWI_BZ- | IN | | |
| | | 9 | ISWI_MTR+ | I/O | | |
| | | 10 | ISWI_MTR- | I/O | | |
| | | 11 | ISWI_MTRG | I/O | | |
| | | 12 | PWROUT | OUT | | |
| | | 13 | PWROUTE | OUT | | |
| | | 14 | PWRIN | IN | | |
| | | 15 | PWRINE | IN | | |

## Table 2.4.24 RIF I/O specifications 4

| Label | Name | Pin | Signal Name | I/O | Specification | Detail |
|---|---|---|---|---|---|---|
| J835 | GYRO I/F | - | GYRO I/F | I/O | Gyro Interface Circuit | Internal wiring |
| J836 | EX_OUT | 1 | VD_OUT+ | OUT | 0 to -2.6V<br>Output Z : 50 ohm<br>50dB / V | See Fig. 2.4.22 RIF VD_OUT detail |
| | | 2 | VD_OUT- | OUT | | |
| | | 3 | TRG_OUT+ | OUT | 0 to 4V<br>Output Z : 50 ohm<br>Pulse width : 1us | See Fig. 2.4.23 RIF TRG_OUT detail |
| | | 4 | TRG_OUT- | OUT | | |
| | | 5 | BP_OUT+ | OUT | Open Collector Output<br>5V, 1k ohm Pull-up is recommended. | See Fig. 2.4.24 RIF BP BZ_OUT detail |
| | | 6 | BP_OUT- | OUT | | |
| | | 7 | BZ_OUT+ | OUT | | |
| | | 8 | BZ_OUT- | OUT | | |
| | | 9 | GND | - | GND | - |
| | | 10 | N.C. | - | N.C. | - |
| J837 | AC_SC_IN (DC48V) | - | AC_SC_IN (DC48V) | - | Power Supply Unit | Internal wiring |
| TB838 | AC_MTRPWR (AC100/220V) | 1 | U | OUT | 100-220Vac , 50/60Hz, Single phase | Depends on PSU AC IN |
| | | 2 | V | OUT | | |
| J839 | DC_SC_IN (DC24V PSU) | - | DC_SC_IN (DC24V PSU) | - | Power Supply Unit | Internal wiring |
| TB840 | DC_MTRPWR (DC24V MTR) | 1 | + | OUT | 24Vdc | PSU DC IN |
| | | 2 | − | OUT | | |

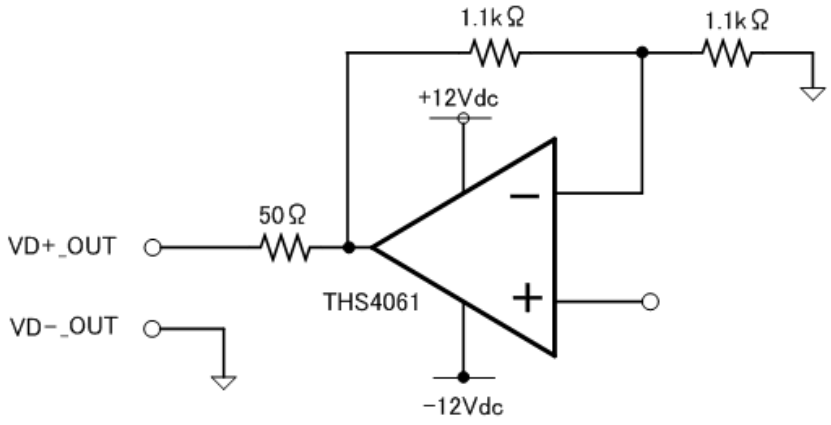


**Fig. 2.4.22 RIF VD_OUT detail**

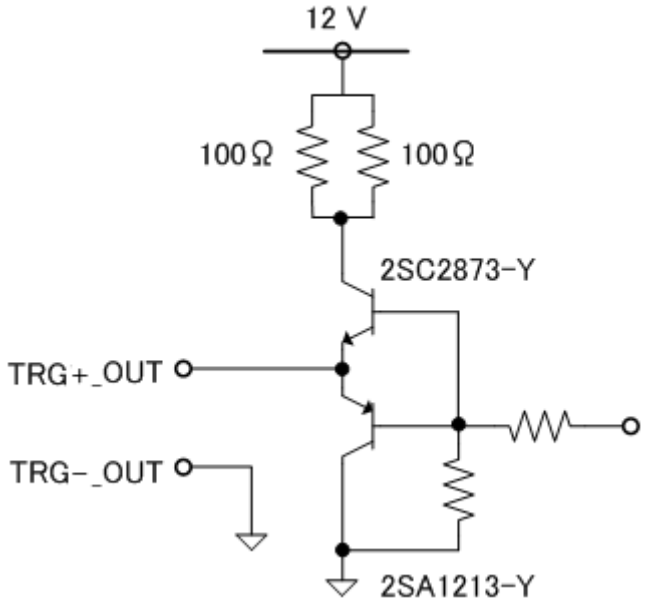


**Fig. 2.4.23 RIF TRG_OUT detail**

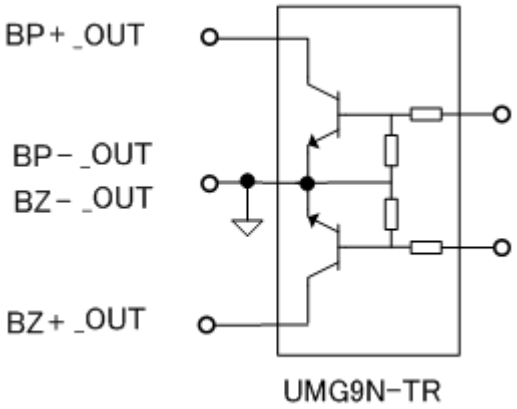


**Fig. 2.4.24 RIF BP BZ_OUT detail**

# 2.5 DIP-SW and Jumper Pin Settings

## 2.5.1. Setting for CQD-2273 Radar Interface Circuit

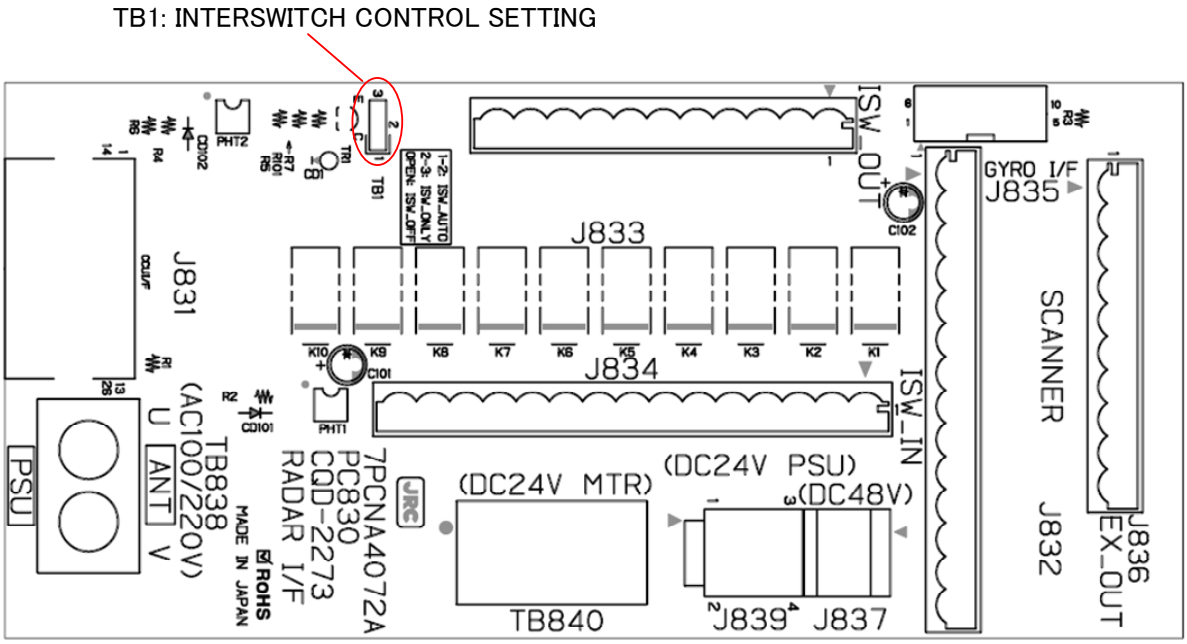


**Fig. 2.5.1 CQD-2273 Radar Interface Circuit**

**Table. 2.5.1 Radar Interface Circuit TB1 Settings**

| Radar Interface Circuit TB1 Settings | | Description |
|---|---|---|
| 1-2 SHORT CIRCUIT | ISW_AUTO (Factory default) | You can switch the scanner unit to be used on your Display unit via the Interswitch unit. |
| 2-3 SHORT CIRCUIT | ISW_ONLY (Not allowed) | Scanner signals always come down to your Display unit via the Interswitch unit. You can switch them on your Display unit in service menu. |
| OPEN | ISW_OFF (Not allowed) | Scanner signals come down to your Display unit directly. Since they do not come through the Interswitch unit, you cannot switch them. |

⚠ If it is not suggested from JRC office, do not set the TB1 of Radar Interface Circuit to “2-3 SHORT CIRCUIT” or “OPEN”.

- **It may cause a lower radar system performance.**

## Connection procedure with Scanner Units

1. Connect the scanner unit to J832 and TB838 or TB840 as follows.

   J832: Radar signals. TB838: AC motor power. TB840: DC motor power.

| | |
|---|---|
| AC Motor Scanner Unit：<br>NKE-1139、NKE-1130、NKE-1632、NKE-2632、NKE-2632-H、<br>NKE-1129-7、NKE-1129-9、NKE-1125-6、NKE-1125-9 | J832 and TB838 |
| DC Motor Scanner Unit：<br>NKE-2254-6HS、NKE-2103-6、NKE-2103-6HS | J832 and TB840 |

• For the procedures for processing the equipment cable end, see **Chapter 2 of Installation Manual**..

• Fix the shield part of the equipment cable with pressing by metal fittings which is surrounded by a dotted line frame in the figure below. Connect the shield to the thumbscrew surrounded by the circle.(Recommended crimp terminals V5.5)

> ⚠
>
> So that the braided shield is not short-circuited to the power supply terminal block, please insulate the cable and fix with cable tie. Please put the Extra length of the cable to the bottom of the display unit so that the not shorted to

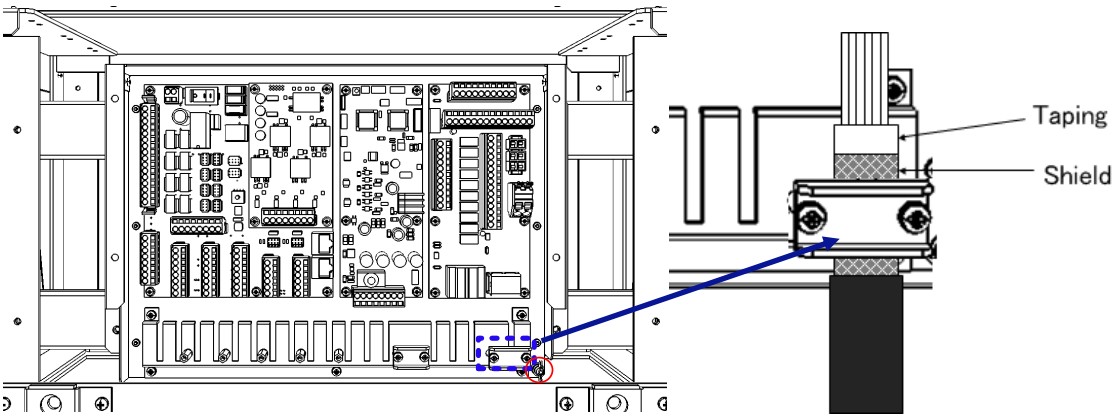


2. When connecting the interswitch unit, see **INSTALLATION MANUAL 5.1 Installation of Interswitch Unit.**

3. When connecting the ECDIS, see **INSTALLATION MANUAL 3.8 Connection with ECDIS.**

## 2.5.2. Settings for CMJ-554 Gyro Interface Circuit

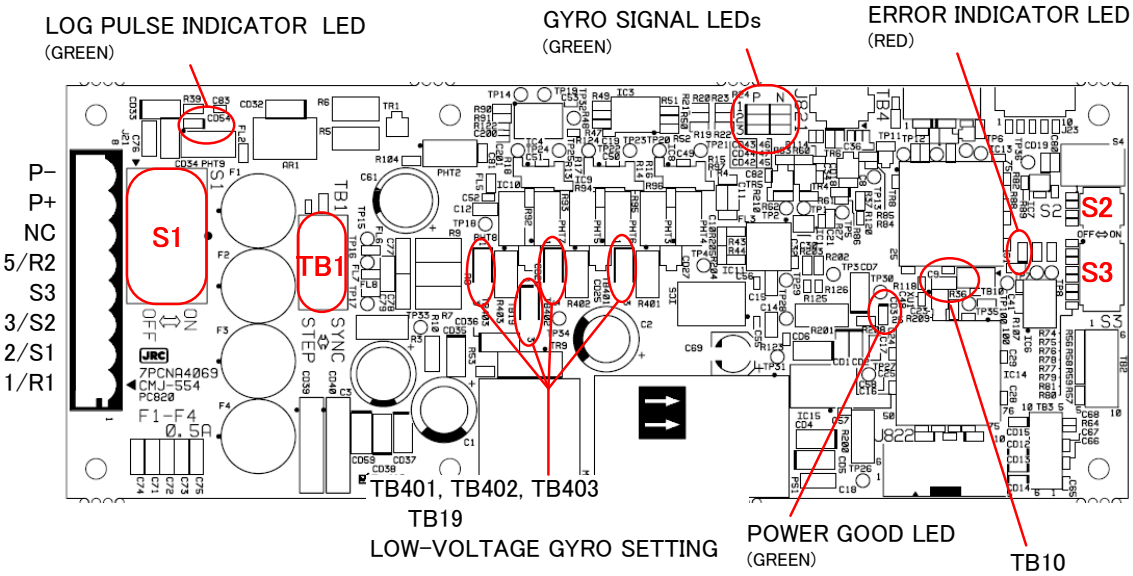


**Fig. 2.5.2 CMJ-554 Gyro Interface circuit**

**Table. 2.5.2 GIF TB1 settings**

| TB1 Settings | Description |
|---|---|
| SYNC | Synchro type Gyro compass |
| STEP | Step type Gyro compass |

**Table. 2.5.3 GIF TB401, TB402, TB403, TB19 settings**

| TB401, TB402, TB403, TB19 Settings | Description |
|---|---|
| 1-2 SHORT CIRCUIT | Factory default |
| 2-3 SHORT CIRCUIT | Low voltage settings |

**Table. 2.5.4 GIF TB10 settings**

| TB10 Settings | Description |
|---|---|
| SHORT CIRCUIT | Factory default |
| OPEN | Not allowed |

⚠ If it is not suggested from JRC office, do not set the TB10 of Gyro Interface Circuit to “OPEN”.

**• It may cause a lower radar system performance.**

**Table. 2.5.5 GIF S1 settings**

| S1 Settings | Description |
|---|---|
| OFF | Gyro signals will be disconnected. |
| ON | Gyro signals will be connected. |

**Table. 2.5.6 GIF S2 settings**

| S2 Settings | | 1 | 2 | 3 | 4 |
|---|---|---|---|---|---|
| GYRO SIM | Simulator ON | ON | | | |
| | Simulator OFF | OFF | | | |
| LOG SIM | Simulator ON | | ON | | |
| | Simulator OFF | | ON | | |
| | NC | | | | |

**Table. 2.5.7 GIF S3 settings**

| S3 Settings | | 1 | 2 | 3 | 4 | 5 | 6 | 7 | 8 |
|---|---|---|---|---|---|---|---|---|---|
| GYRO SETTING | GYRO TYPE "STEP" | ON | | | | | | | |
| | GYRO TYPE "SYNC" | OFF | | | | | | | |
| GYRO RATIO | RATIO 36x | | ON | ON | | | | | |
| | RATIO 90x | | ON | OFF | | | | | |
| | RATIO 180x | | OFF | ON | | | | | |
| | RATIO 360x | | OFF | OFF | | | | | |
| GYRO DIRECTION | Direction 'REVERSE' | | | | ON | | | | |
| | Direction 'NORMAL' | | | | OFF | | | | |
| GYRO ALARM TIME | LONG | | | | | ON | | | |
| | SHORT | | | | | OFF | | | |
| LOG ALARM | LOG ALARM | | | | | | ON | | |
| | | | | | | | OFF | | |
| LOG SETTING | RATIO 100P | | | | | | | ON | ON |
| | RATIO 200P | | | | | | | ON | OFF |
| | RATIO 400P | | | | | | | OFF | ON |
| | RATIO 800P | | | | | | | OFF | OFF |

## Connection procedure with Gyro Compass

1. Turn S1 off

Gyro Compass and Gyro Interface Circuit will be disconnected.

2. Switch TB1 for the type of your Gyro Compass

Synchro type Gyro Compass: Set TB1 to “SYNC”

Step type Gyro Compass: Set TB1 to “STEP”

3. Set S3 as follows for your Gyro Compass and Speed Log according to Table. 2.5.7 GIF S3 settings.

S2-1 : Gyro type (STEP / SYNC)

S2-2/3 : Gyro speed ratio

S2-4 : The direction of rotation

S2-5 : Gyro alarm time (LONG / SHORT)

S2-6 : Log alarm (ON / OFF)

S2-7/8 : Log settings

4. Set TB401-403 and TB19 as follows if your Gyro Compass signals are less than 22V.

1-2 SHORT CIRCUIT: Factory default.

2-3 SHORT CIRCUIT: Set this if voltages of step Gyro signals are less than 22V.

5. Connect your Gyro Compass and Speed Log to J823 of CMJ-554 Gyro Interface Circuit as follows.

**Table. 2.5.8 GIF input section**

| Gyro and Log | J823 | Description |
|---|---|---|
| Synchro Gyro | R1, S1, S2, S3 and R2. | 24 - 115Vac<br>(50 / 60 / 400Hz) |
| Step Gyro | 1, 2, 3 and 5<br>( 5 for common ) | 21.6 - 70V |
| Pulse Log | P+, P- | 0-50V, Vth = 2V.<br>(5V, 1k ohm Internal Pull-up) |

6. Turn S1 on

Your Gyro compass will be connected to the Gyro interface circuit.

7. Check your Radar Echo and True Bearing Value to make sure that your Gyro Compass is working correctly.

8. Set S3-4 to “REVERSE” if your Radar Echo and True Bearing have Reverse rotation.

Table. 2.5.9 shows the setting examples for some gyro compasses.

**Table. 2.5.9 Setting examples for some gyro compasses**

| item / Manufacture | Gyro Compasses | Repeater Motors (For reference only) | Excitation Voltage | Gyro Select Swiches (S3, TB1 located on the CMJ-554) S3 settings 1 | 2 | 3 | 4 | 5 | 6 | 7 | 8 | TB1 setting |
|---|---|---|---|---|---|---|---|---|---|---|---|---|
| 東京計器<br>TOKYO KEIKI<br>(JAPAN)<br><br>スペリー<br>Sperry<br>(U.S.A) | ES-2/11<br>GLT-100～103/105/106K/107/1104,<br>NJZ-501(R501) | Synchro Motor<br>INMS<br>(TS63N7E13)<br>(36X) | 115V AC<br>60Hz | OFF | ON | ON | OFF | | | | | SYNC |
| | ES-11A, GM-11/11A/21/110/120,<br>MS-2000/3000<br>PR-222R/226/237/237-L<br>/1*8*/2022/2023/22**,<br>TG-200 | Synchro Motor<br>TSAN60E11<br>(90X) | 110V AC<br>60Hz | OFF | OFF | ON | | | | | | SYNC |
| | GLT-201/202/203,<br>MK-14/14T,<br>MKE-1/14T,<br>MOD-1/2/T,<br>PR-500/2502/2503/2507/2507L<br>/3507/4507/5507,<br>SR-130/140,<br>TG-100/5000 | Step Motor<br>GA-2001G<br>Drawing# 103590810<br>600 excitation<br>(180X) | 70V DC | ON | ON | OFF | | | | | | STEP |
| | ES-16<br>SR-120/220 | Step Motor<br>GA-2001G<br>Drawing# 103590820<br>150 excitation<br>(180X) | 35V DC | ON | ON | OFF | | | | | | STEP |
| | CMZ-700D<br>ES140/160<br>PR-26**/6*6*/6*7*,<br>SR-140/160<br>TG-6000/8000 | | 24V DC | | | | | | | | | |
| 横河電機<br>YOKOGAWA<br>(JAPAN) | C-1A/2/3/E,<br>HOKUSHIN PLATH-55/C,<br>PLATH HKRK-C3 | Synchro Motor<br>YM-14<br>TS-19<br>(360X) | 60V AC<br>60Hz | OFF | OFF | OFF | | | | | | SYNC |
| | C1JR, C-1JUNIOR,<br>CMZ-200A/300,<br>D-1,<br>IPS, IPS-2-H2/2B/2B-H2C/5,<br>KM008, KR-053,<br>PLATH NAVIGAT-1,<br>PT11-H2/21/21-H2 | Synchro Motor<br>PY76-N2<br>(360X) | 100V AC<br>50/60Hz | OFF | OFF | OFF | | | | | | SYNC |
| アーマーブラウン<br>ARMA BROWN<br>(France) | 1351,<br>MK-1～7/10/20, MKL-1,<br>NOD-4, NB-23-88,<br>SERIE, SGB-1000 | Step Motor<br>BZ-2191<br>(180X) | 50V DC | ON | ON | OFF | | | | | | STEP |
| アンシッツ<br>ANSCHUTZ<br>(Germany) | 110-301, 139-31,<br>ANSCHUTZ-1～6/12/14/Z,<br>GM-BH, K8051,<br>NB23-126, Z0658U | Synchro Motor<br>NB23-91<br>(360X) | 50V AC<br>50Hz | OFF | OFF | OFF | | | | | | SYNC |
| プラート社<br>C. PLATH<br>(Germany) | NAVIGAT 763-331E,<br>PLATH NAVIGAT-II/III | Synchro Motor<br>YM14A<br>(360X) | 50V AC<br>50Hz | OFF | OFF | OFF | | | | | | SYNC |

*: Numeric Number

## 2.5.3. Settings for CMH-2370 Serial LAN Interface Circuit

### IEC61162-1 Connections

Connect the communication signals from sensors to the IEC61162-1 port located on the CMH-2370 in JUNCTION BOX NQE-1143. Received signals from sensors will be connected to terminals RX_A and RX_B which is IEC61162 standards. Transmit signals to sensors will be connected to terminals TX_A and TX_B which are IEC61162 standards. The number of port for IEC61162-1 on CMH-2370 is 8 ports including each receiver and transmitter allocated at J8103-J8106 on CMH-2370.

- See **Fig. 2.5.5** Connector location of CMH-2370 Serial LAN interface circuitabout location of J8103-J8106 on CMH-2370.
- To configure the port, refer to **Chapter 4 of Installation Manual**
- Fix the signal cable with the clamp surrounded by the doted line in the figure below.
- Connect the cable shield to the hex spacer surrounded by the circle in the figure below. (Recommended crimp terminals V5.5)

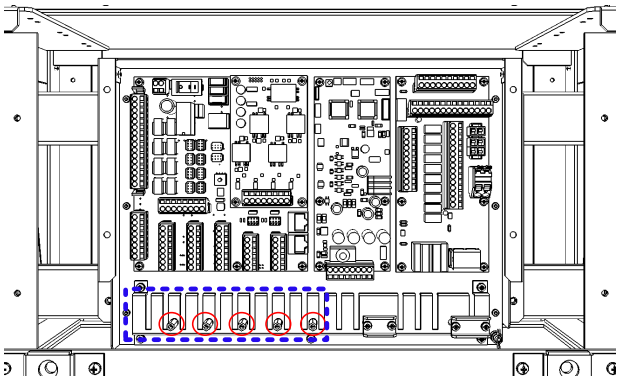

> ⚠ So that the braided shield is not shorted to the power supply terminal block, please insulate the cable and fix with cable tie. Please put the Extra length of the cable to the bottom of the display unit so that the not shorted to the UPS or SENSOR LAN switch unit.

**Table. 2.5.10 Terminal Assign of J8103-J8106**

| Terminal Number | J8105 | J8104 | J8103 | J8106 |
|---|---|---|---|---|
| 1 | RX1A | RX3A | RX5A | RX7A |
| 2 | RX1B | RX3B | RX5B | RX7B |
| 3 | TX1A | TX3A | TX5A | TX7A |
| 4 | TX1B | TX3B | TX5B | TX7B |
| 5 | RX2A | RX4A | RX6A | RX8A |
| 6 | RX2B | RX4B | RX6B | RX8B |
| 7 | TX2A | TX4A | TX6A | TX8A |
| 8 | TX2B | TX4B | TX6B | TX8B |

## IEC61162-2 Connections

Connect the communication signals from sensors to the IEC61162-2 port located on the CMH-2370 in JUNCTION BOX NQE-1143. Communication signals from sensors will be connected to terminals RX_A, RX_B and RX_C which are IEC61162 standards. Communication signals to sensors will be connected to terminals TX_A, TX_B and TX_C which is IEC61162 standards.

The number of port for IEC-61162-2 on CMH-2370 is two ports including each receiver and transmitter allocated at J8101 and J8102 on CMH-2370.

- See **Fig. 2.5.5** Connector location of CMH-2370 Serial LAN interface circuitabout location of J8101-J8102 on CMH-2370.
- To configure the port, refer to **Chapter 4 of Installation Manual**
- Fix the signal cable with the clamp surrounded by the doted line in the figure below.
- Connect the cable shield to the hex spacer surrounded by the circle in the figure below.

(Recommended crimp terminals V5.5)

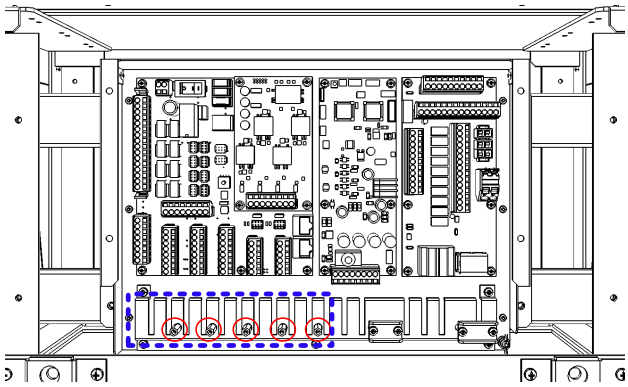

So that the braided shield is not shorted to the power supply terminal block, please insulate the cable and fix with cable tie. Please put the Extra length of the cable to the bottom of the display unit so that the not shorted to the UPS or SENSOR LAN switch unit.

**Table. 2.5.11 Terminal Assign of J8101 and J8102**

| Terminal Number | J8102 | J8101 |
|---|---|---|
| 1 | TX9A | TX10A |
| 2 | TX9B | TX10B |
| 3 | TX9C | TX10C |
| 4 | RX9A | RX10A |
| 5 | RX9B | RX10B |
| 6 | RX9C | RX10C |

ex. Data communication example of AIS:

AIS data will be displayed on the radar screen by connecting sensor data from AIS to RX_A, RX_B and RX_C.

By connecting to AIS from TX_A, TX_B and TX_C, it is possible to stop the AIS alarm displayed on the radar screen.

## Communication Type and termination

Communication type of IEC61162-2 can be selected full duplex (IEC61162-2) mode or half duplex (RS-485) mode by TB2 and TB3 setting on CMH-2370.

To select communication type for channel9, terminal of TB2 will be short-circuited by Short Plug.

To select communication type for channel10, terminal of TB3 will be short-circuited by Short Plug.

To set TB2 and TB3, refer to **Table. 2.5.12** and **Fig. 2.4.10** SLC IEC61162-2 TXRX detail.

**Table. 2.5.12 Setting of communication type**

| Type | Short terminal No. of TB2 and TB3 |
|---|---|
| Full duplex (IEC61162-2) | 5-9, 6-10, 7-11, 8-12 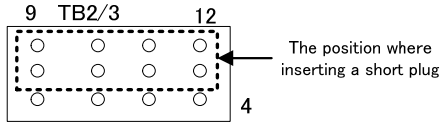  |
| Half Duplex (RS-485) | 5-1, 6-2, 7-3, 8-4 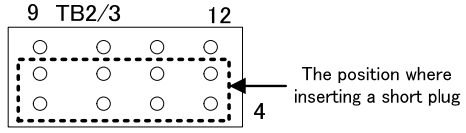  |

And the termination of receiver can be removable for multi connections by TB14 and TB15 setting on CMH-2370.

To set the termination for channel9, terminal of TB14 will be short-circuited by Short Plug.

To set the termination for channel10, terminal of TB15 will be short-circuited by Short Plug.

To set TB14 and TB15, refer to **Table. 2.5.13** Short terminal to select communication typeand **Fig. 2.4.10** SLC IEC61162-2 TXRX detail.

**Table. 2.5.13 Short terminal to select communication type**

| Termination | Short terminal No. of TB14 and TB15 |
|---|---|
| w Termination | 2-3 (Factory default) |
| w/o Termination | 1-2 |

**Note**: The location of TB2, TB3, TB14, TB15, Refer to **Fig. 2.5.5.**

## LAN Connection

CMH-2370 converts the serial data from each sensor into LAN protocol. And the data converted by CMH-2370 transfer to DISPLAY UNIT via SENSOR LAN UNIT NQE-2443. It can transfer the data not only received from sensors to DISPLAY UNIT but also transmitted to sensor from DISPLAY UNIT.

CMH-2370 will be connected to NQE-2443 each RJ-45 by an Ethernet cable.

> ⚠ If it is not suggested from JRC office, do not connect PC or other maker's system to JRC-LAN.
>
> **•Connecting PC or other maker's system may cause a lower system performance.**

Either J8111 or J8112 selected by S4 will be used as an active LAN port.
And, you can select the data format either IEC61162-450 or JRC Formant by S4.

To set S4, refer to **Table. 2.5.14**.
The location of J8111, J8112 and S4, refer to **Fig. 2.5.5**

Fix the signal cable with the clamp surrounded by the dotted line in the figure below.

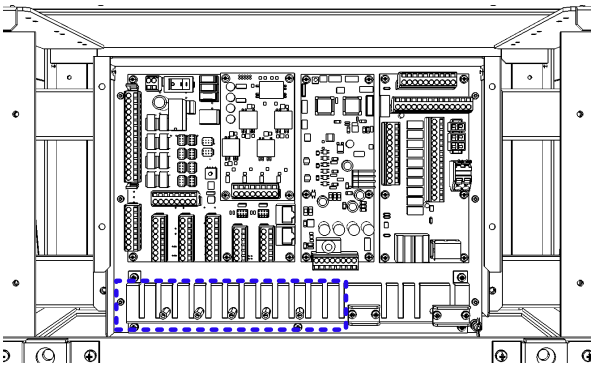

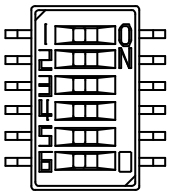


**Fig. 2.5.3**
**Outline of S4**

**Table. 2.5.14 SLC S4 setting table**

| | | | | |
|---|---|---|---|---|
| SW1 | LAN Setting | OFF | Main Channel | Use J8111 |
| | | ON | Sub Channel | Use J8112 |
| SW2 | LAN Type | OFF | Standard | IEC61162-450 |
| | | ON | JRC | JRC Format |
| SW3 | Always set to OFF | | | |
| SW4 | Always set to OFF | | | |
| SW4 | Always set to OFF | | | |
| SW6 | Always set to OFF | | | |

**To apply the setting, please restart CMH-2370 with the S1, because it will be reflected in the startup.**

If some number of CMH-2370s have been installed and connected to the same SENSOR LAN UNIT NQE-2443, you should change IP address of each CMH-2370 by S3 setting. Refer to **Table. 2.5.15.**

CMH-2370 to be connected to the IAS (Integrated Automation System) or AMS (Alert Management System) is set the operation mode: ALC (Alert LAN Converter). Also in this case, set the IP address in refer to **Table. 2.5.15.**

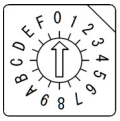


**Fig. 2.5.4 Outline of S3**

The location of S3, refer to **Fig. 2.5.5.**

**Table. 2.5.15 IP Address setting table**

| S3 Position | Mode | No. | IEC61162-450 | | JRC Format | |
|---|---|---|---|---|---|---|
| | | | Main LAN | Sub LAN | Main LAN | Sub LAN |
| 0 | SLC | SLC1 | 172.16.60.107 | 172.17.60.107 | 192.168.60.107 | 192.168.61.107 |
| 1 | | SLC2 | 172.16.60.108 | 172.17.60.108 | 192.168.60.108 | 192.168.61.108 |
| 2 | | SLC3 | 172.16.60.109 | 172.17.60.109 | 192.168.60.109 | 192.168.61.109 |
| 3 | | SLC4 | 172.16.60.110 | 172.17.60.110 | 192.168.60.110 | 192.168.61.110 |
| 4 | | SLC5 | 172.16.60.111 | 172.17.60.111 | 192.168.60.111 | 192.168.61.111 |
| 5 | | SLC6 | 172.16.60.112 | 172.17.60.112 | 192.168.60.112 | 192.168.61.112 |
| 6 | | SLC7 | 172.16.60.113 | 172.17.60.113 | 192.168.60.113 | 192.168.61.113 |
| 7 | | SLC8 | 172.16.60.114 | 172.17.60.114 | 192.168.60.114 | 192.168.61.114 |
| 8 | | SLC9 | 172.16.60.115 | 172.17.60.115 | 192.168.60.115 | 192.168.61.115 |
| 9 | | SLC10 | 172.16.60.116 | 172.17.60.116 | 192.168.60.116 | 192.168.61.116 |
| A | | SLC11 | 172.16.60.117 | 172.17.60.117 | 192.168.60.117 | 192.168.61.117 |
| B | | SLC12 | 172.16.60.118 | 172.17.60.118 | 192.168.60.118 | 192.168.61.118 |
| C | ALC | ALC1 | 172.16.60.119 | 172.17.60.119 | 192.168.60.119 | 192.168.61.119 |
| D | | ALC2 | 172.16.60.120 | 172.17.60.120 | 192.168.60.120 | 192.168.61.120 |
| E | | ALC3 | 172.16.60.121 | 172.17.60.121 | 192.168.60.121 | 192.168.61.121 |
| F | | ALC4 | 172.16.60.122 | 172.17.60.122 | 192.168.60.122 | 192.168.61.122 |

SFI:System Function ID of each IEC 61162 channel will also be changed depending on the IP address.

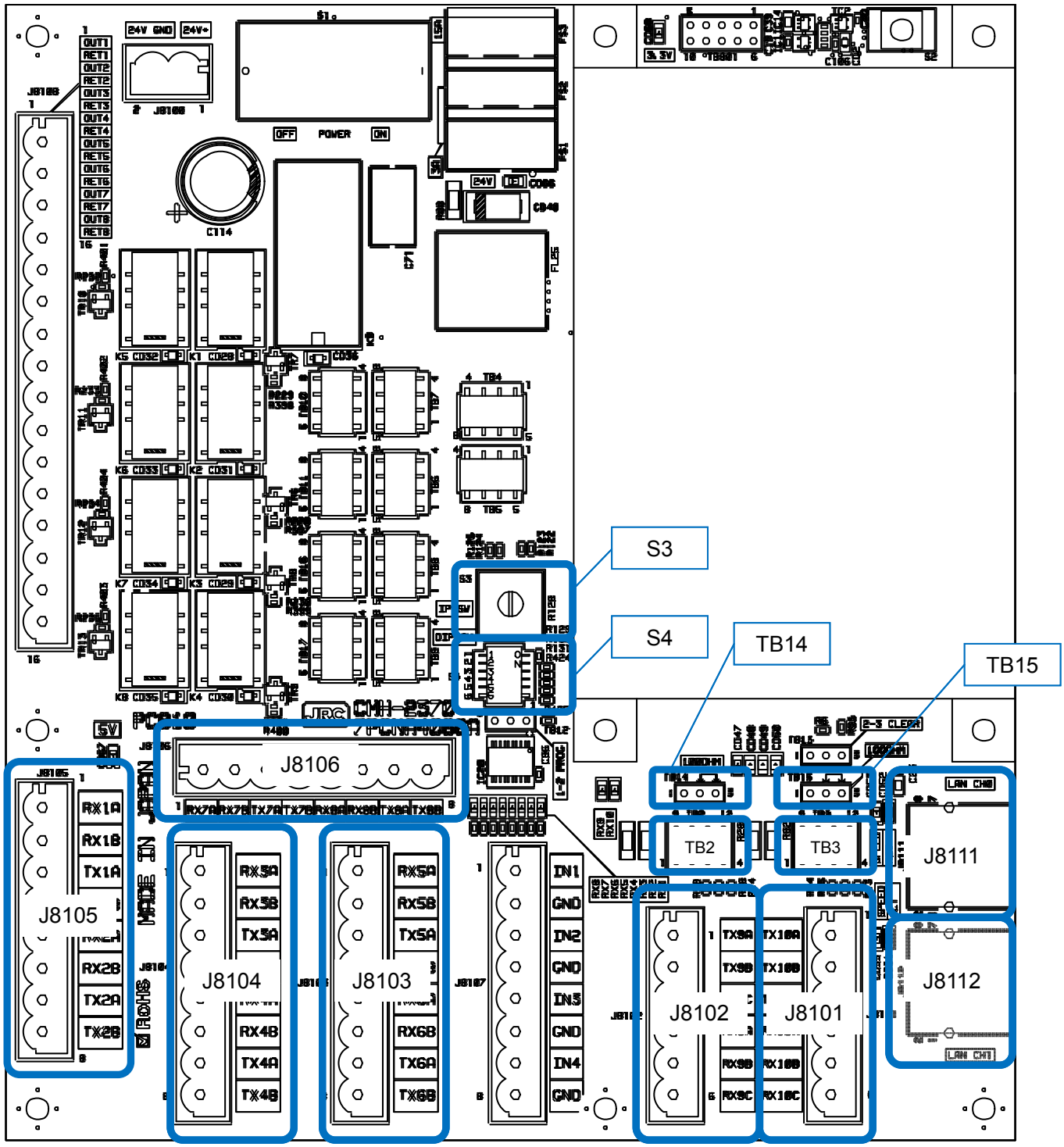


**Fig. 2.5.5 Connector location of CMH-2370 Serial LAN interface circuit**

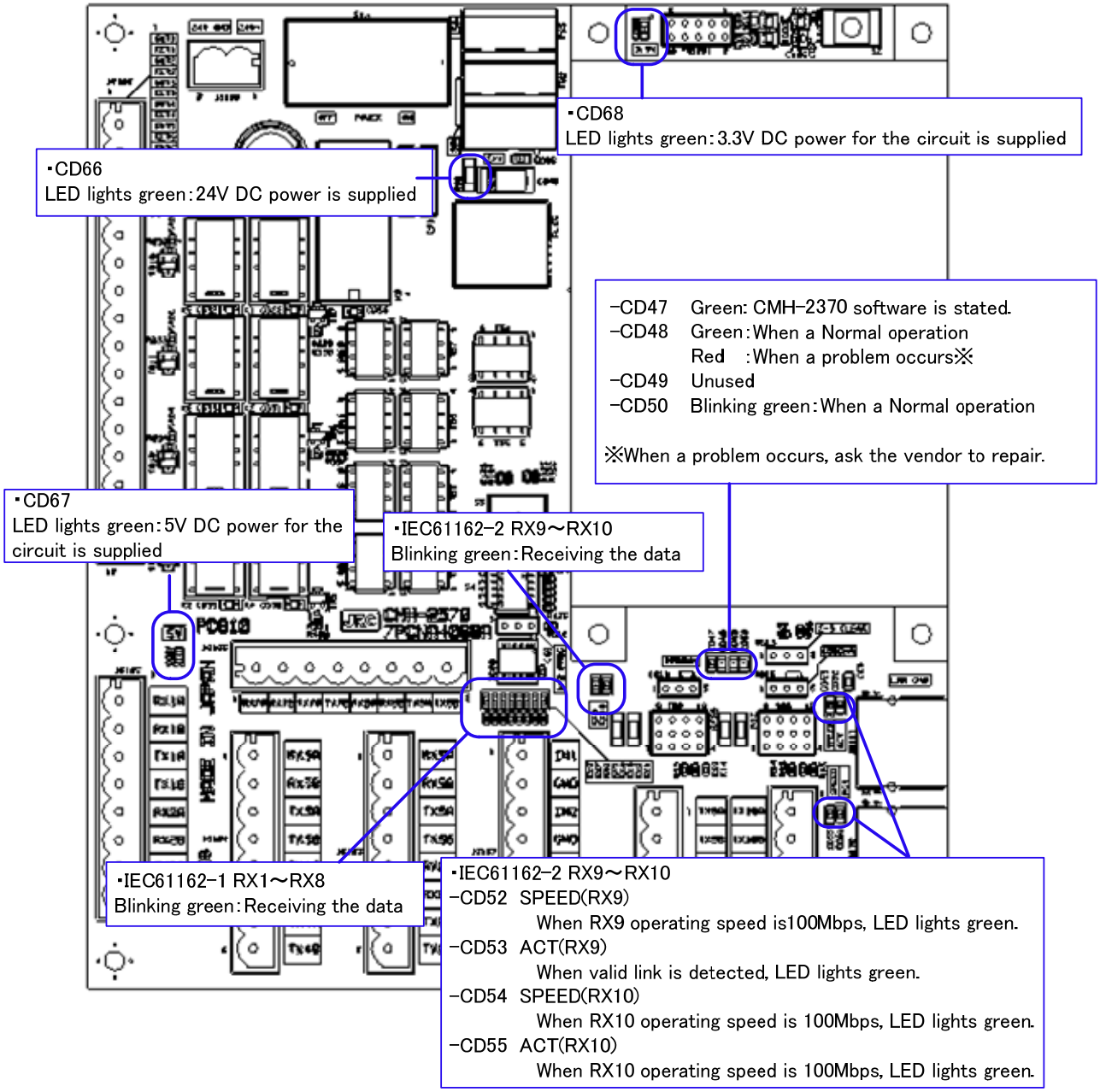


**Fig. 2.5.6 LED Indication of CMH-2370 Serial LAN interface circuit**

# Contact Input/Output

## Contact Input

Connect the dry contact of other equipment to the Input port which is on CMH-2370 in JUNCTION BOX NQE-1143. The number of Input port on CMH-2370 is 4 ports allocated at J8107. Terminal assign of J8107, refer to Table. 2.5.16.

Dry contact of other equipment will be connected to terminals IN and GND.

- See **Fig. 2.5.9** Dry Contact Connector and TB location on CMH-2370about location of J8107 on CMH-2370.
- To configure the port, refer to **Chapter 4 of Installation Manual.**
- Fix the signal cable with the clamp surrounded by the dotted line in the figure below.
- Connect the cable shield to the hex spacer surrounded by the circle in the figure below.

  (Recommended crimp terminals V5.5)

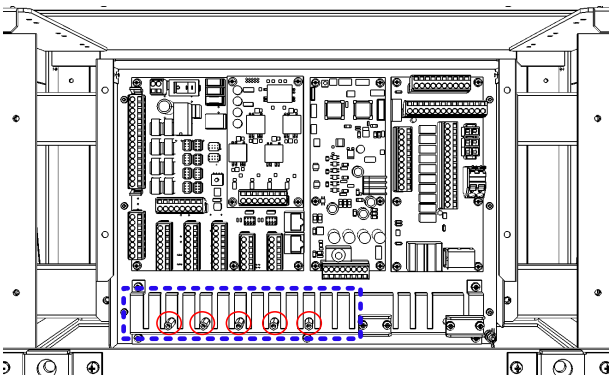

So that the braided shield is not shorted to the power supply terminal block, please insulate the cable and fix with cable tie. Please put the Extra length of the cable to the bottom of the display unit so that the not shorted to the UPS or SENSOR LAN switch unit.

**Table. 2.5.16 Terminal Assign of J8107**

| Terminal Number | J8107 |
|---|---|
| 1 | IN1 |
| 2 | GND1 |
| 3 | IN2 |
| 4 | GND2 |
| 5 | IN3 |
| 6 | GND3 |
| 7 | IN4 |
| 8 | GND4 |

Do not apply a voltage signal to contact input ports. Because they have pulled up to 5V with 1k ohm internally, connecting a voltage signal may cause malfunction.

## Contact Output

Connect the input of other equipment to the output port which is located on CMH-2370 in JUNCTION BOX NQE-1143. The number of output ports on CMH-2370 is 8 ports allocated at J8108. Terminal assign of J8108, refer to **Table. 2.5.17**

- See **Fig. 2.5.9.** about location of J8108 on CMH-2370.
- To configure the port, refer to **Chapter 4 of Installation Manual.**
- Connect the cable shield to the hex spacer surrounded by the circle in the figure below.

(Recommended crimp terminals V5.5)

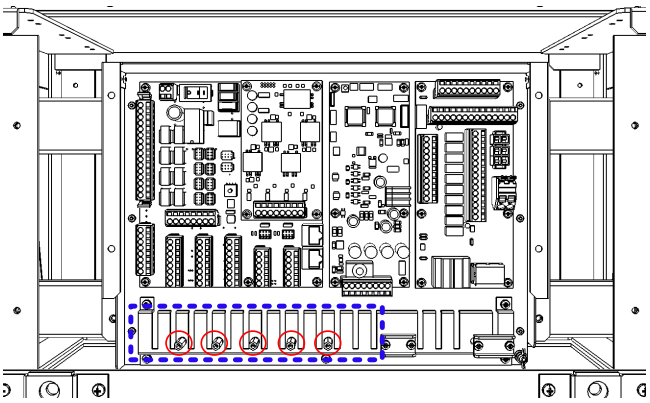

So that the braided shield is not shorted to the power supply terminal block, please insulate the cable and fix with cable tie. Please put the Extra length of the cable to the bottom of the display unit so that the not shorted to the UPS or SENSOR LAN switch unit.

**Table. 2.5.17 Terminal Assign of J8108**

| Terminal Number | J8107 |
|---|---|
| 1 | OUT1 |
| 2 | RET1 |
| 3 | OUT2 |
| 4 | RET2 |
| 5 | OUT3 |
| 6 | RET3 |
| 7 | OUT4 |
| 8 | RET4 |
| 9 | OUT5 |
| 10 | RET5 |
| 11 | OUT6 |
| 12 | RET6 |
| 13 | OUT7 |
| 14 | RET7 |
| 15 | OUT8 |
| 16 | RET8 |

Each Output port can be selected matched interface for your input device as below by setting TB4-TB11, TB16 and TB17 shown in Fig. 2.2.1.

- Dry contact: Normally Open
- Dry contact: Normally Close
- 24V dc for Buzzer: Normally no Supply
- 24V dc for Buzzer: Normally Supply

> ⚠ 24V dc for buzzer will be supplied from main power supply of CMH-2370 via 15A fuse.
> If you set OUT as dry contact, do not set the terminal to GND on TB4 or TB5 which is matched to OUT you want.

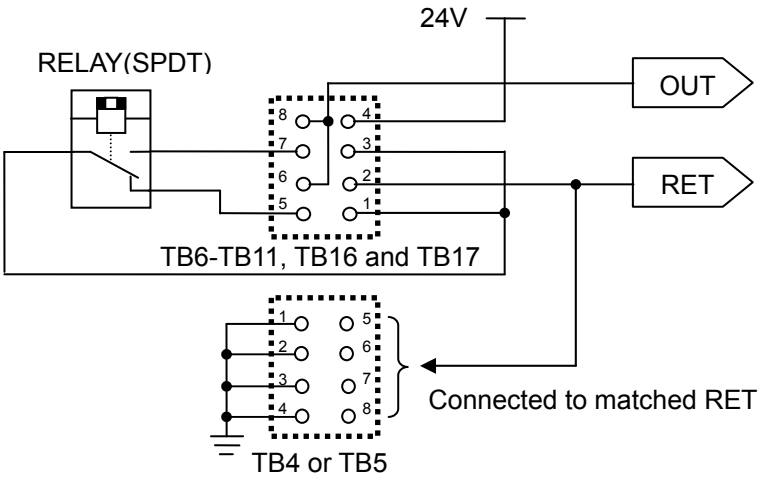


**Fig. 2.5.7 Output port circuit diagram**

Matched TB for each OUT and RET is shown in **Table. 2.5.18**
And, to select Output, the terminals of each TB will be set by Short Plugs shown in **Fig. 2.5.8.**

**Table. 2.5.18 Matched TB for OUT setting**

| Port | Jumper No. | 24VDC Power GND |
|---|---|---|
| OUT1/RET1 | TB6 | TB4: 1-5 short circuit |
| OUT2/RET2 | TB7 | TB4: 2-6 short circuit |
| OUT3/RET3 | TB8 | TB4: 3-7 short circuit |
| OUT4/RET4 | TB9 | TB4: 4-8 short circuit |
| OUT5/RET5 | TB17 | TB5: 1-5 short circuit |
| OUT6/RET6 | TB16 | TB5: 2-6 short circuit |
| OUT7/RET7 | TB11 | TB5: 3-7 short circuit |
| OUT8/RET8 | TB10 | TB5: 4-8 short circuit |

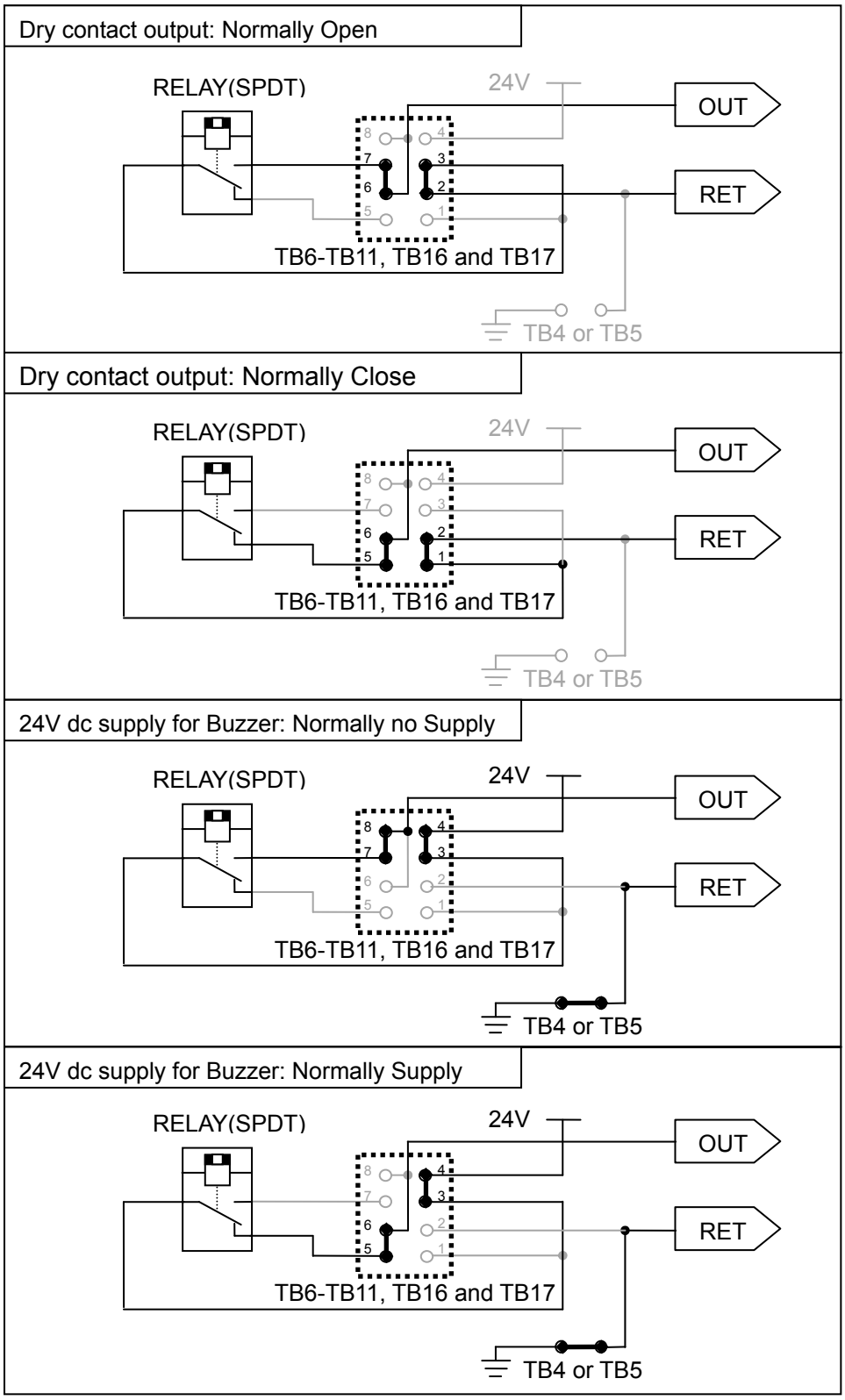


**Fig. 2.5.8 Output port setting by TB**

⚠ Maximum current of RELAY is 2A.

Do not connect the load including inrush current which exceed maximum current

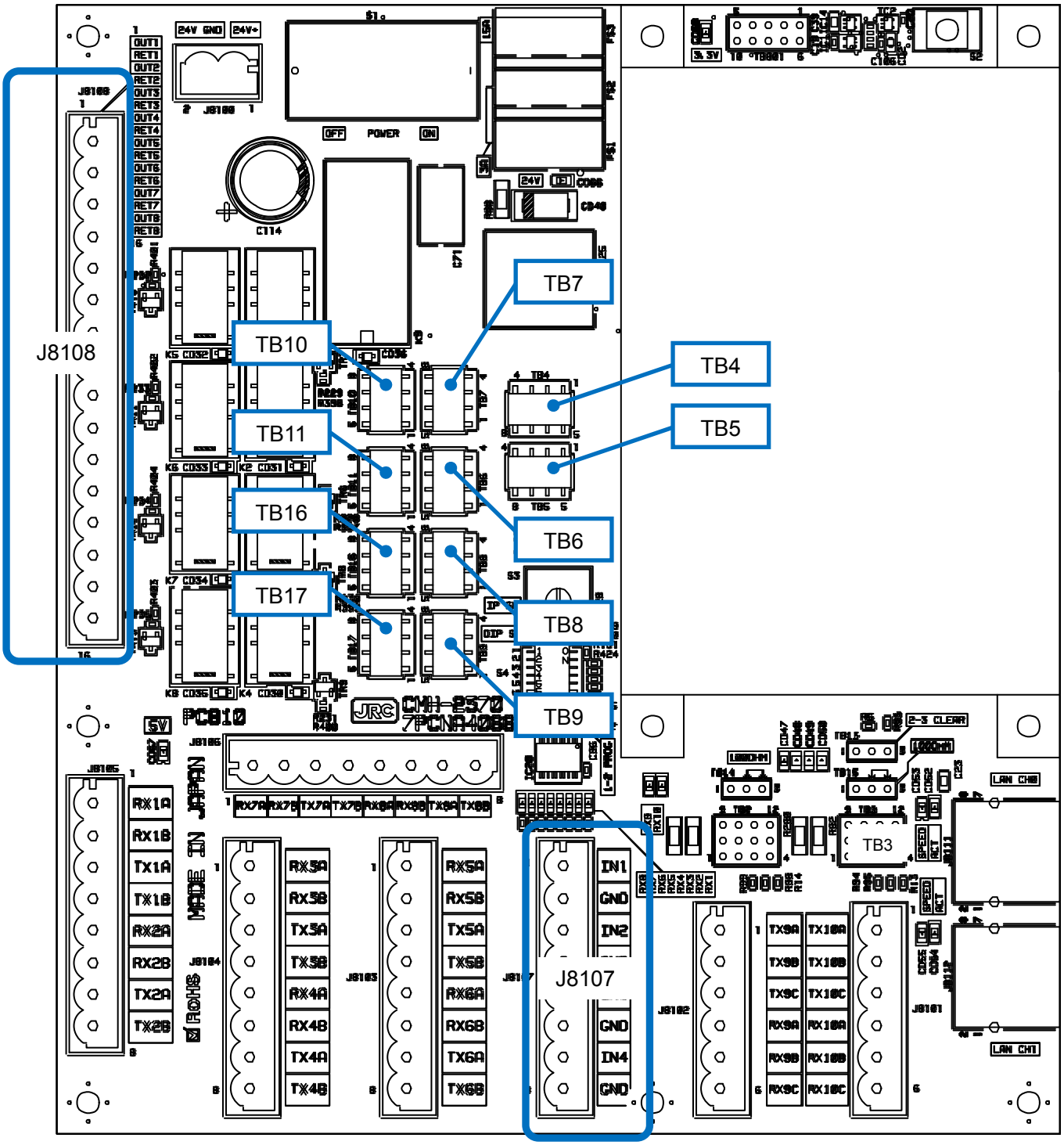


**Fig. 2.5.9 Dry Contact Connector and TB location on CMH-2370**

## 2.5.4. Settings for CMJ-560 Analog Option Circuit

Connect the analog signals from sensors to J842 located on the CMJ-560 Analog Option Circuit:AOC in JUNCTION BOX NQE-1143. AOC has four channel analog signal inputs.

The terminal assign of J842 is shown below.

AOC J842 Connector

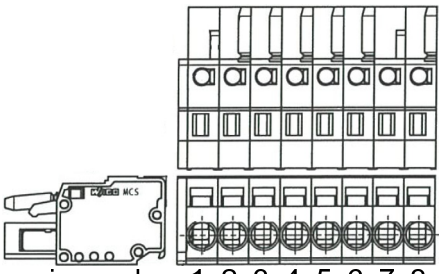

pin number : 1 2 3 4 5 6 7 8

- Wiring to AOC J842

  1 : channel 1 sensor input+
  2 : channel 1 sensor input-
  3 : channel 2 sensor input+
  4 : channel 2 sensor input-
  5 : channel 3 sensor input+
  6 : channel 3 sensor input-
  7 : channel 4 sensor input+
  8 : channel 4 sensor input-

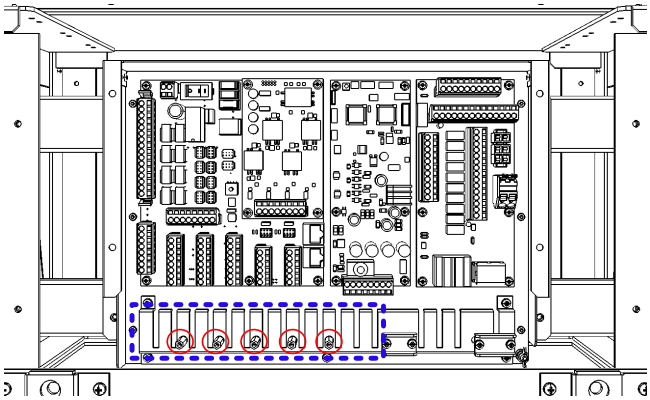

So that the braided shield is not shorted to the power supply terminal block, please insulate the cable and fix with cable tie. Please put the Extra length of the cable to the bottom of the display unit so that the not shorted to the UPS or SENSOR LAN switch unit.

AOC shall be configured in accordance with the analog sensor output specifications to be connected. Set the AOC correctly by referring next page.

Set TB2-7 of CMJ-560 Analog Option Circuit according to ship's analog sensors.

## Settings for voltage signal input

When Analog Sensors output specifications is Voltage, set as follows.

・Input Signal Range ：-10V to +10V

**Table. 2.5.19 Setting Table of Voltage Signal Input**

| Setting Table of Voltage Signal Input | | |
|---|---|---|
| **Channel** | **Reference** | **Setting** |
| 1 | TB2 | Short-circuit the pins 1-2 or Open all pins |
| | TB7(±10V) | Short-circuit the pins 1-5 |
| 2 | TB3 | Short-circuit the pins 1-2 or Open all pins |
| | TB7(±10V) | Short-circuit the pins 2-6 |
| 3 | TB4 | Short-circuit the pins 1-2 or Open all pins |
| | TB7(±10V) | Short-circuit the pins 3-7 |
| 4 | TB5 | Short-circuit the pins 1-2 or Open all pins |
| | TB7(±10V) | Short-circuit the pins 4-8 |

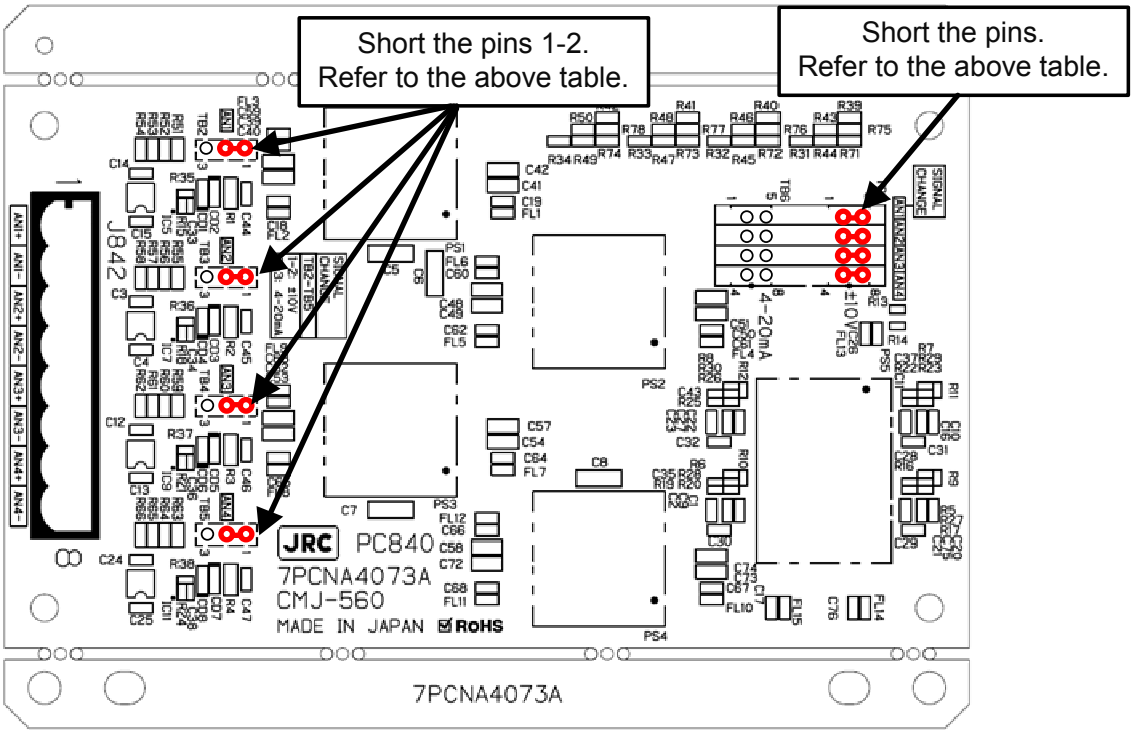


**Fig. 2.5.10 Voltage input Settings for CMJ-560 Analog Option Circuit**

## Current Signal Input

When Analog Sensors output specifications is Current, set as follows.

・Input Signal Range ：4mA to 20mA

**Table. 2.5.20 Setting Table of Current Signal Input**

| Setting Table of Current Signal Input | | |
|---|---|---|
| **Channel** | **Reference** | **Setting** |
| 1 | TB2 | Short-circuit the pins 2-3 |
| | TB6(4-20mA) | Short-circuit the pins 1-5 |
| 2 | TB3 | Short-circuit the pins 2-3 |
| | TB6(4-20mA) | Short-circuit the pins 2-6 |
| 3 | TB4 | Short-circuit the pins 2-3 |
| | TB6(4-20mA) | Short-circuit the pins 3-7 |
| 4 | TB5 | Short-circuit the pins 2-3 |
| | TB6(4-20mA) | Short-circuit the pins 4-8 |

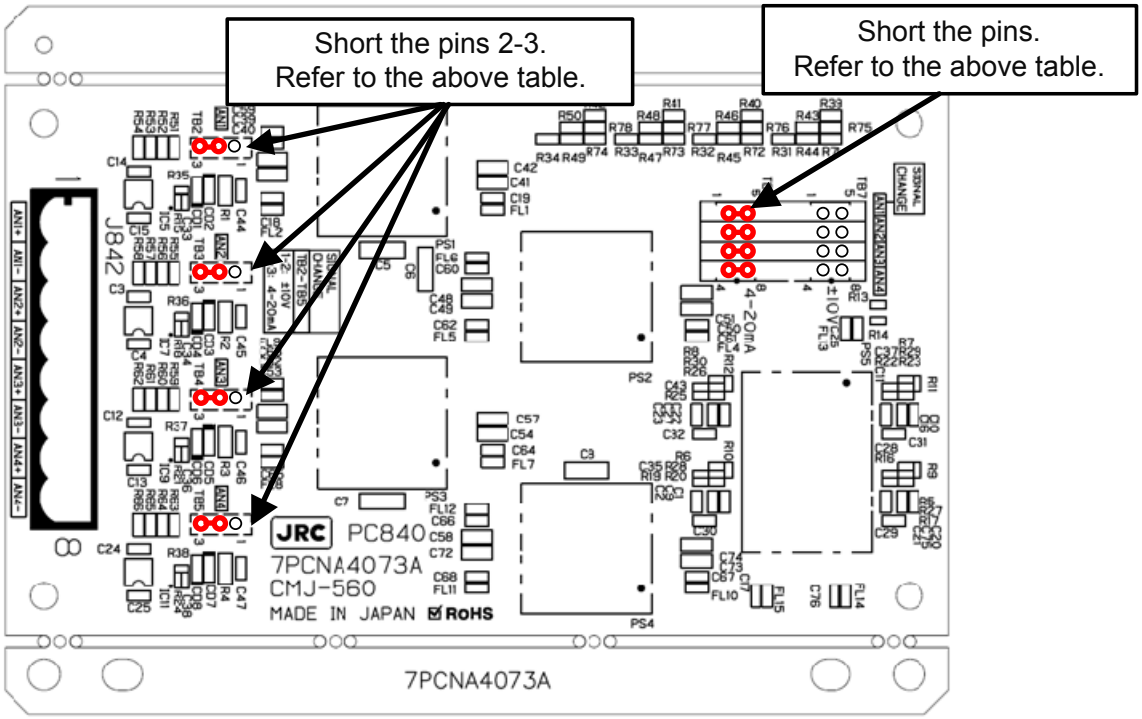


**Fig. 2.5.11 Current input settings for CMJ-560 Analog Option Circuit**

## 2.5.5. Settings for NDC-1590 Central Control Unit: CCU

⚠ If it is not suggested from JRC office, this VGA monitor setting is not necessary. Wrong monitor setting may lose video output.

⚠ Do NOT set the ID rotary switch to position “2” when a DVI monitor is / or both a DVI monitor and a VGA monitor are connected to the CCU.
Wrong monitor setting may lose video output.

### Settings for ONLY connection of the VGA monitor to CCU.

This section describes the video output setting that CCU has the only VGA monitor for its display. A VGA monitor will be connected to J4025 (Analog RGB) on CCU.

1. Turn off the CCU power. Then, Set the ID rotary switch as follows.
2. Turn on the CCU power. Confirm that the VGA output displays correctly.

**Table. 2.5.21 ID rotary switch settings for CCU NDC-1590**

| CCU NDC-1590 | |
|---|---|
| **ID rotary switch settings** | **Description** |
| 2 | Only the VGA monitor is connected to J4205 (RGB_OUT) on the CCU. |
| Other<br>( Factory default = 0 ) | A DVI monitor is connected to J4101 (DVI_MNU) on the CCU.<br>Or, both a DVI monitor and a VGA monitor are connected to J4101 (DVI_MNU) and J4205 (RGB_OUT) respectively on the CCU. |

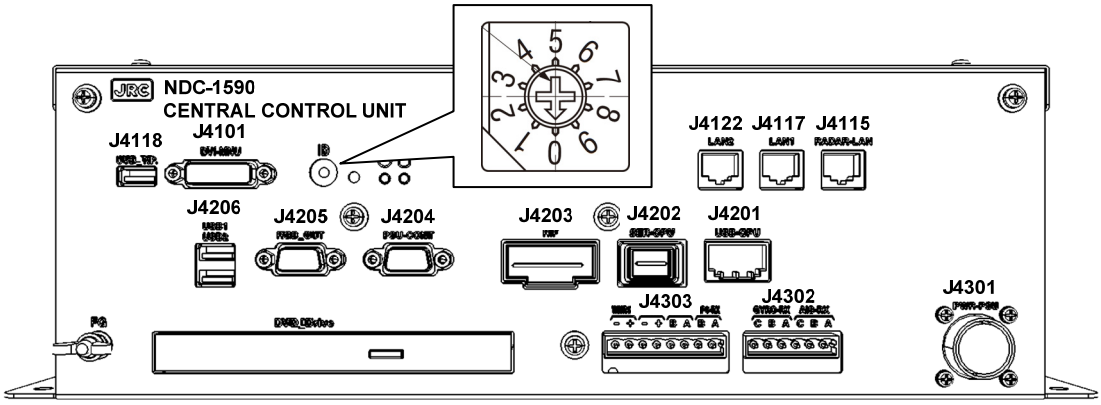


**Fig. 2.5.12 ID rotary switch on CCU**

**NOTE**

If the CCU has 16-posintions rotary switch (0 to F), it is not supported this VGA monitor setting.

## Settings for J4303: WMRST / PWRFAIL contact output.

PWRFAIL and WMRST contact output configuration can be changed by TB1 and TB2 on the CCU I/F circuit CMH-2406.

1. Disassemble the CCU. Divide it into Upper base and Bottom base. For further information, see "**Field Service Manual 4.3.3.2 Replacing with the CCU Repair Kit NZC-1590**".
2. Set TB1 and TB2 as follows. They are on the CCU I/F circuit mounted on the Upper base.

**Table. 2.5.22 TB1, TB2 settings on the CCU I/F circuit CMH-2406**

| CCU I/F circuit CMH-2406 | | | |
|---|---|---|---|
| **J4303** | **TB setting** | | **Description** |
| PWRFAIL | TB1 | 1-2 short circuit | Normally-closed (Factory default) |
| | | 2-3 short circuit | Normally-open |
| WMRST | TB2 | 1-2 short circuit | Normally-closed |
| | | 2-3 short circuit | Normally-open (Factory default) |

## J4302: Termination resistor settings for GYRO-RX / AIS-RX

Termination resistor ON / OFF setting for GYRO-RX and AIS-RX can be changed by TB5 and TB6 on the CCU I/F circuit CMH-2406.

⚠ If the Display Unit has the Serial number of **"LC58298"** or less, this setting is not available.

1. Confirm that the Serial number of the Display unit is greater than **"LC58298".**
   - Stand alone type : The Serial number has been affixed to the front cover of the Display Unit mount kit.
   - Desktop / Flush mount type : The Serial number has been affixed to the top side of NDC-1590 :CCU.

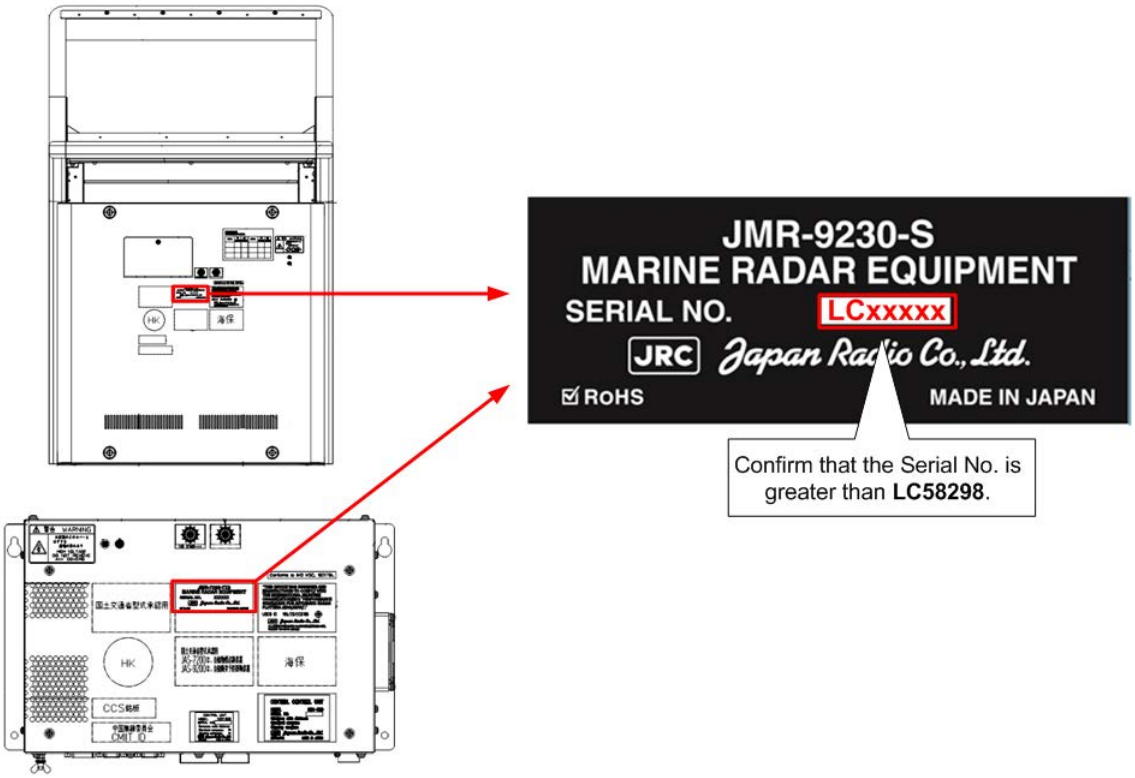


2. Disassemble the CCU. Divide it into Upper base and Bottom base. For further information, see "**Field Service Manual 4.3.3.2 Replacing with the CCU Repair Kit NZC-1590**".
3. Set TB5 and TB6 as follows. They are on the CCU I/F circuit mounted on the Upper base.

**Table. 2.5.23 TB5, TB6 settings for CCU I/F circuit CMH-2406**

| CCU I/F circuit CMH-2406 | | | |
|---|---|---|---|
| **J4302** | **TB settings** | | **Termination resistor** |
| AIS-RX | TB5 | 1-2 short circuit | 100 ohm termination resistor. (Factory default) |
| | | 2-3 short circuit | OFF |
| GYRO-RX | TB6 | 1-2 short circuit | 100 ohm termination resistor. (Factory default) |
| | | 2-3 short circuit | OFF |

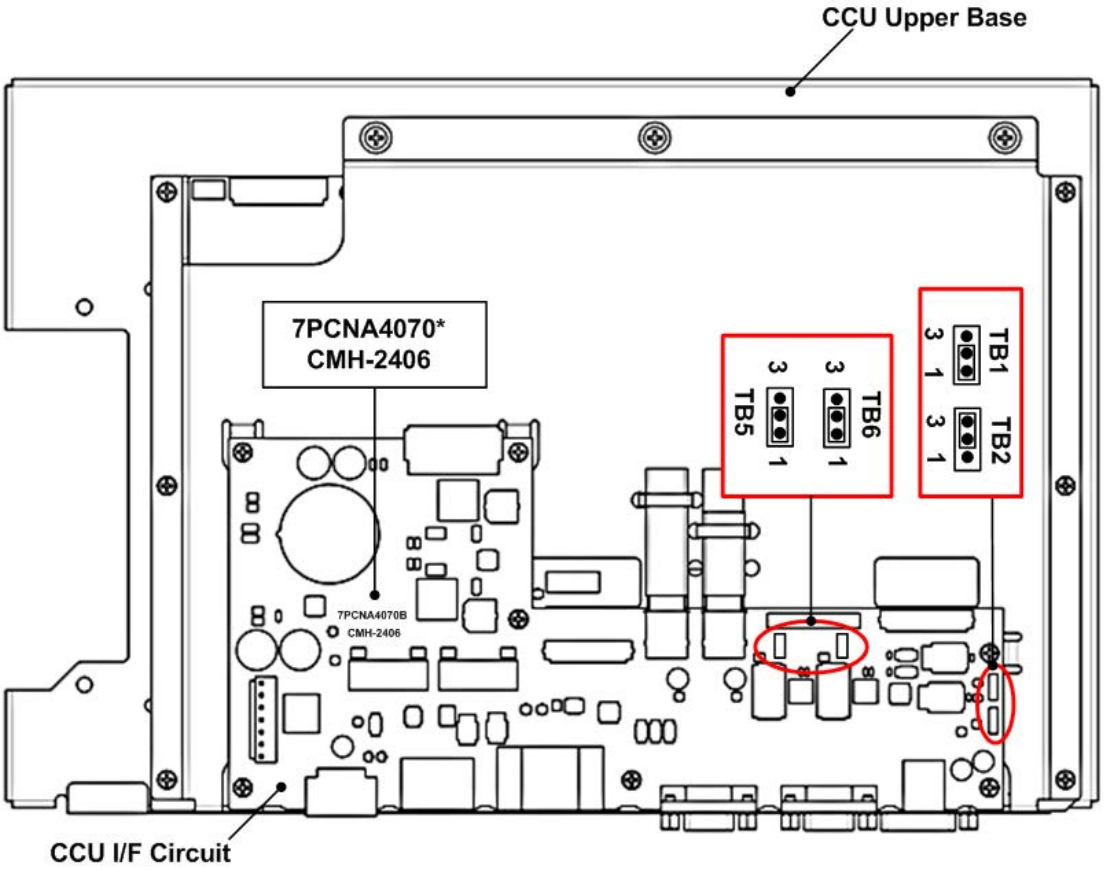


**Fig. 2.5.13 CCU Upper base and CCU I/F circuit**

⚠ The PCB type code of CMH-2406 which is included to the CCU of **"LC58298"** or less is 7PCNA4070A. Suffix "A" PCB of CMH-2406 is not supported termination resistor ON / OFF setting.

# 2.5.6. Settings for T/R Control circuit CMC-1205R

[DIP switch types]
- SW1, SW2

[Jumper pin types]
- J92, J93, J95, J96

## ◎NKE-2254 (25 kW, X-band, 2 units, DC motor)

- Jumper pin settings

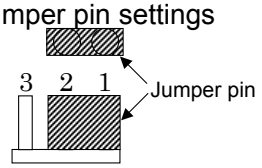


J92,J93,J95,J96: 1-2 short circuit

- DIP switch settings (■ indicates a switch.)

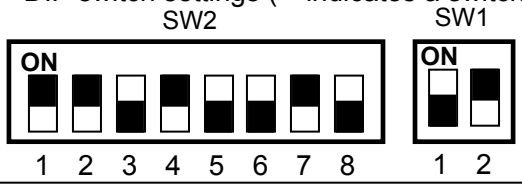


## ◎NKE-2254-HS (25 kW, X-band, 2 units, high-speed DC motor)

- Jumper pin settings

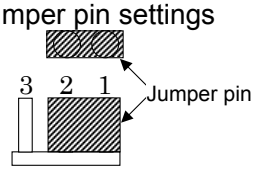


J92,J93,J95,J96: 1-2 short circuit

- DIP switch settings (■ indicates a switch.)

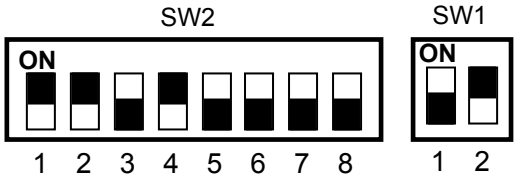


## ◎NKE-1130 (30 kW, S-band, 2 units, AC motor)

- Jumper pin settings

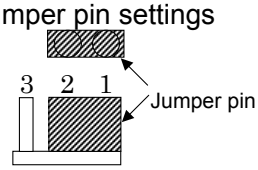


J92,J93,J95,J96: 1-2 short circuit

- DIP switch settings (■ indicates a switch.)

## ◎NKE-1125 (25 kW, X-band, 2 units, AC motor)

- Jumper pin settings

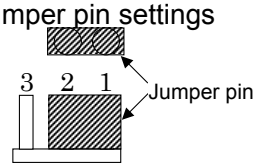


J92,J93,J95,J96: 1-2 short circuit

- DIP switch settings (■ indicates a switch.)

## ◎NTG-3225 (25 kW, X-band, 3 units, AC motor)

- Jumper pin settings

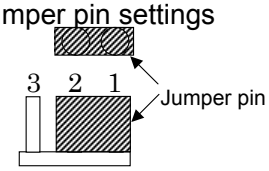


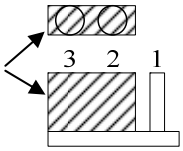


J92,J93 • • 1-2 short circuit J95,J96 • • 2-3 short circuit

- **DIP switch settings (■ indicates a switch.)**

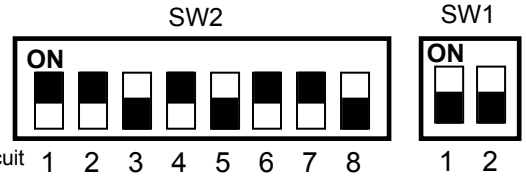


## ◎NTG-3230 (30 kW, S-band, 3 units, AC motor)

- Jumper pin settings

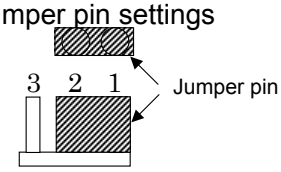


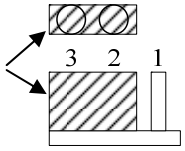


J92,J93 • • 1-2 short circuit J95,J96 • • 2-3 short circuit

- **DIP switch settings (■ indicates a switch.)**

# 2.5.7. Settings for NKE-1632 Scanner Unit

## Voltage Selection of Motor Driver Circuit CBD-1949

1. Set JP1 as follows according to your ship's AC voltage.

**Table. 2.5.24 JP1 settings for Motor Driver Circuit CBD-1949**

| Motor Driver Circuit CBD-1949 | |
|---|---|
| **JP1 Settings** | **Description** |
| 1-2 short circuit | 100Vac |
| 2-3 short circuit | 220Vac |

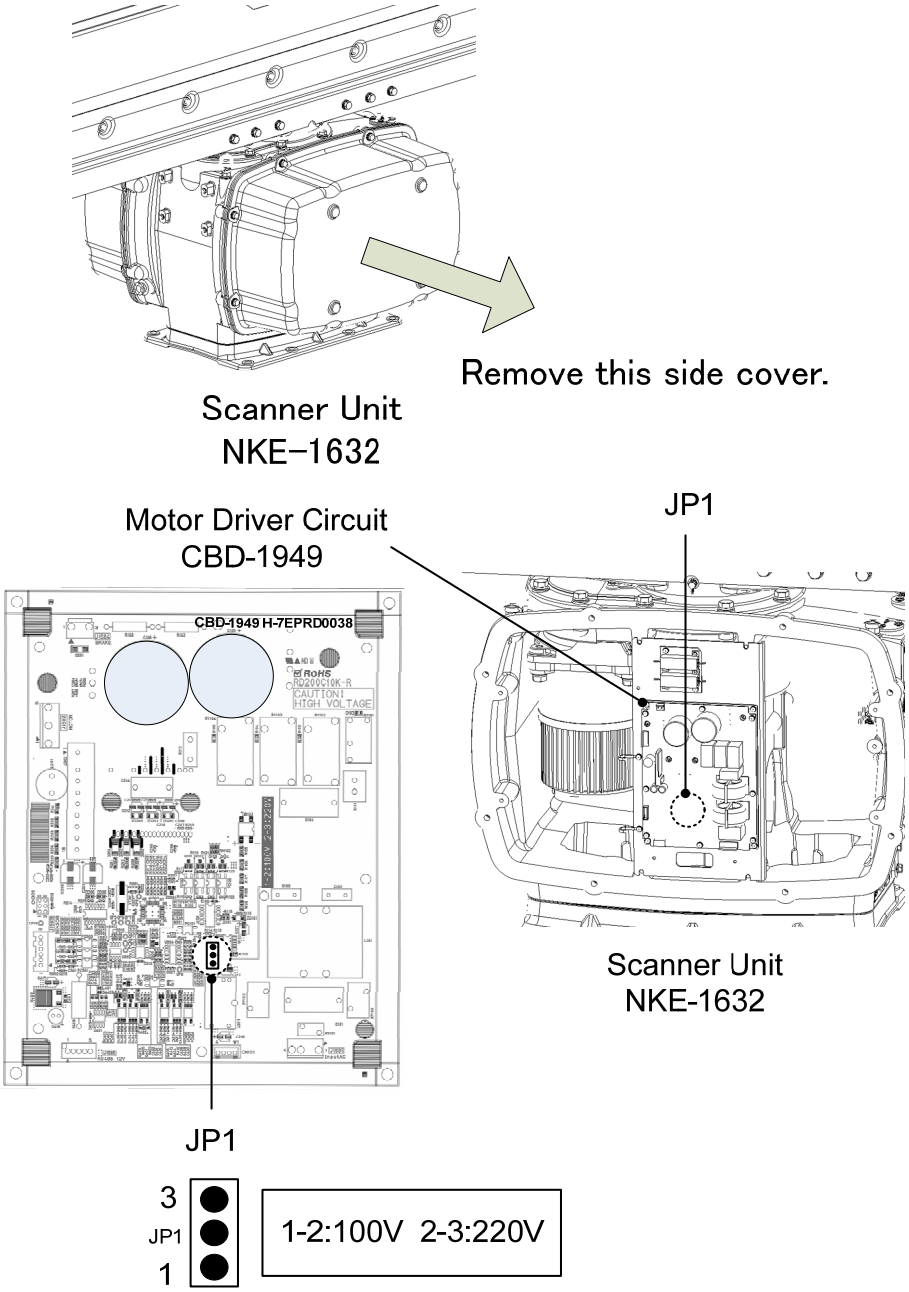


**Fig. 2.5.14 Motor Driver Circuit CBD-1949 in NKE-1632**

# 2.5.8. Settings for NKE-2632 Scanner Unit

## Voltage Selection of Motor Driver Circuit CBD-1949

3. Set JP1 as follows according to your ship's AC voltage.

**Table. 2.5.25 JP1 settings for Motor Driver Circuit CBD-1949**

| Motor Driver Circuit CBD-1949 | |
|---|---|
| **JP1 Settings** | **Description** |
| 1-2 short circuit | 100Vac |
| 2-3 short circuit | 220Vac |

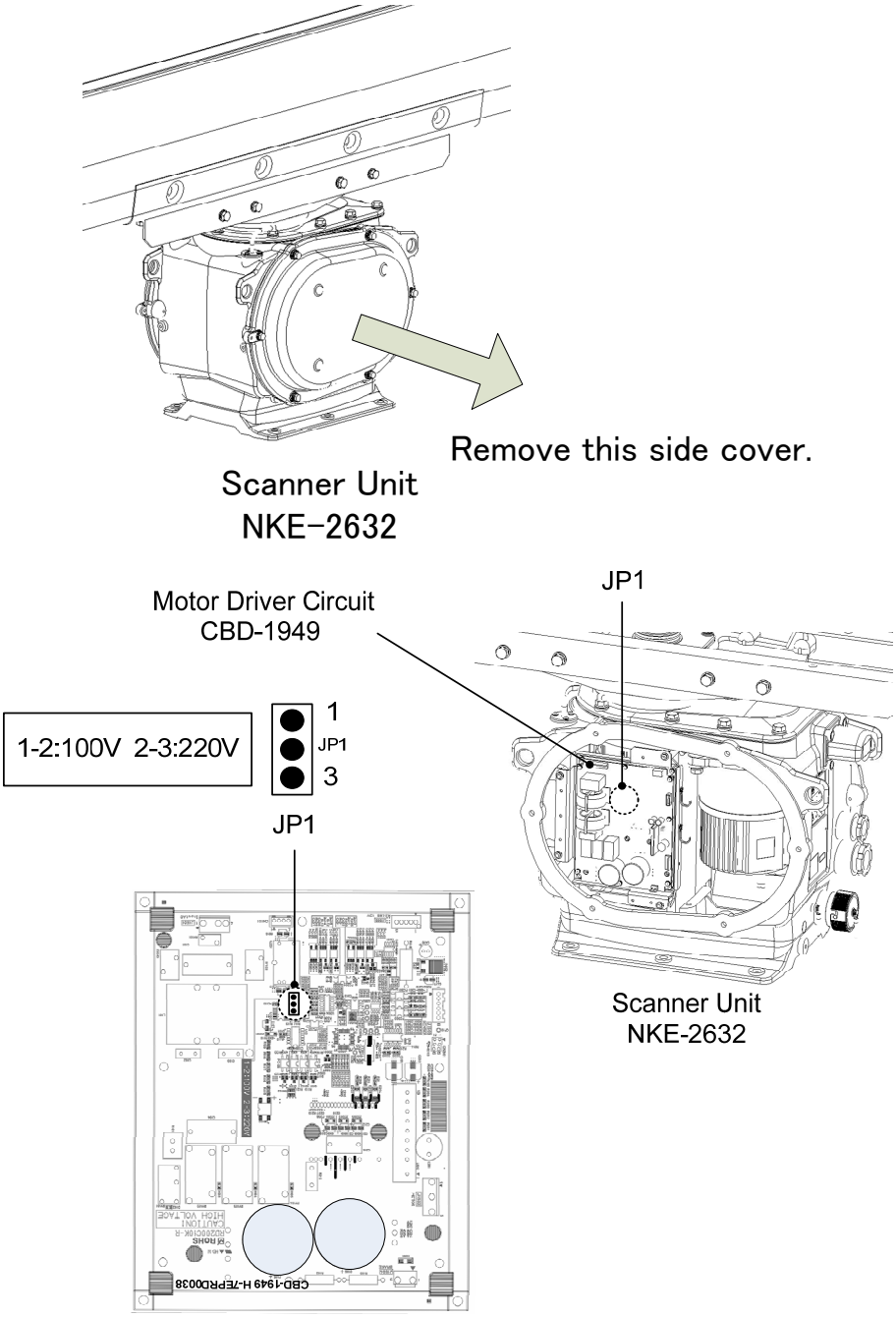


**Fig. 2.5.15 Motor Driver Circuit CBD-1949 in NKE-2632**

# 2.5.9. Settings for NKE-2632-H Scanner Unit

## Voltage Selection of Motor Driver Circuit CBD-1950

1. Set JP1 as follows according to your ship's AC voltage.

**Table. 2.5.26 JP1 settings for Motor Driver Circuit CBD-1950**

| Motor Driver Circuit CBD-1950 | |
|---|---|
| **JP1 Settings** | **Description** |
| 1-2 short circuit | 100Vac |
| 2-3 short circuit | 220Vac |

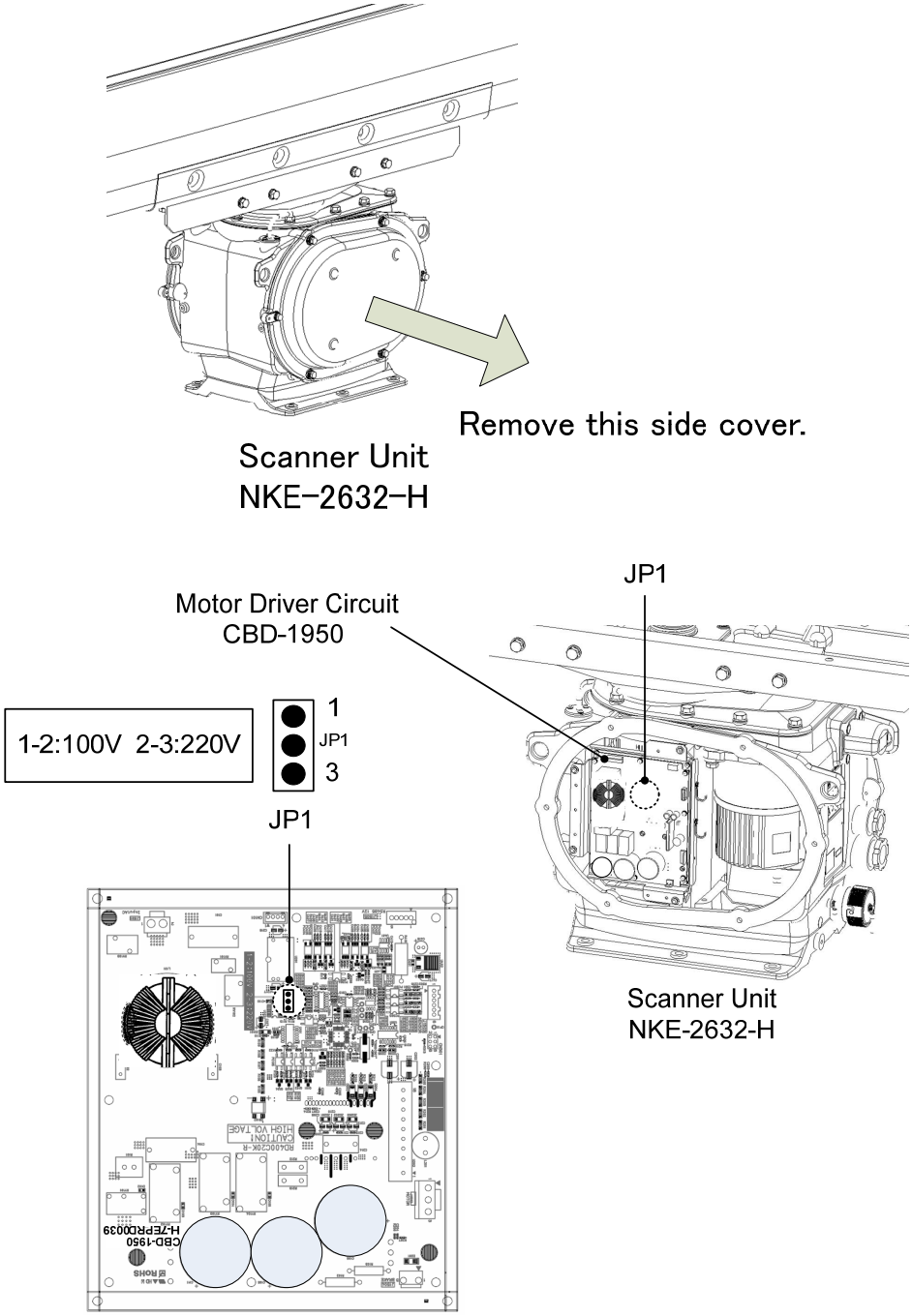


**Fig. 2.5.16 Motor Driver Circuit CBD-1950 in NKE-2632-H**

# 2.5.10. Setting for UPS

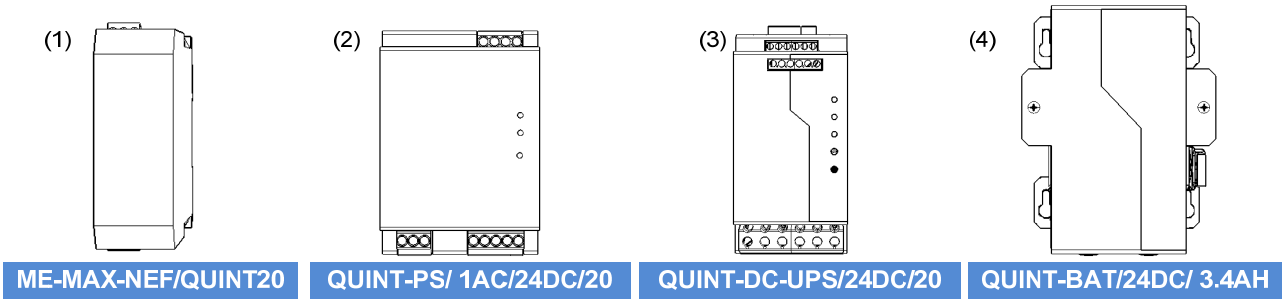


**Fig. 2.5.17 UPS components**

## Setting for QUINT-DC-UPS/24DC/20

1. Set Bat-Select rotary switch of QUINT-DC-UPS/24DC/20 to 3.4.

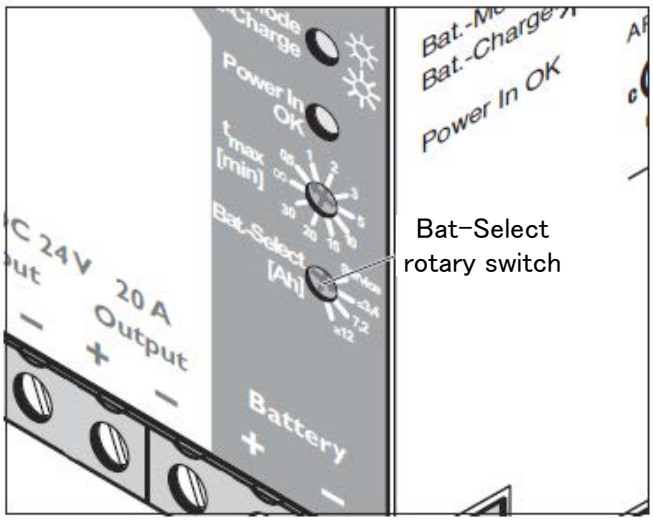


**Fig. 2.5.18** QUINT-DC-UPS/24DC/20 Bat-Select rotary switch

# 2.5.11. Settings for Interswitch

> ⚠ Since settings have been normally made upon shipment from factory, do not edit them if it is not suggested from JRC office.
>
> **• It may cause a lower radar system performance.**

## 4ch Interswitch NQE-3141-4A

Set dip switches SW11, SW12, and SW13 as shown below. For further information, see **Chapter 5 of Installation Manual**

1) SW11 setting (expansion mode, master/slave setting)

Set all OFF.

2) SW12 setting (radar connection setting)

Radar Connection Setting

| | | |
|---|---|---|
| 1 | ON | No. 1 display unit connected |
| | OFF | No. 1 display unit NOT connected |
| 2 | ON | No. 1 antenna unit connected |
| | OFF | No. 1 antenna unit NOT connected |
| 3 | ON | No. 2 display unit connected |
| | OFF | No. 2 display unit NOT connected |
| 4 | ON | No. 2 antenna unit connected |
| | OFF | No. 2 antenna unit NOT connected |
| 5 | ON | No. 3 display unit connected |
| | OFF | No. 3 display unit NOT connected |
| 6 | ON | No. 3 antenna unit connected |
| | OFF | No. 3 antenna unit NOT connected |
| 7 | ON | No. 4 display unit connected |
| | OFF | No. 4 display unit NOT connected |
| 8 | ON | No. 4 antenna unit connected |
| | OFF | No. 4 antenna unit NOT connected |

3) SW13 (unused)

Set all OFF

## 8ch Interswitch NQE-3141-8A

8ch Interswitch has two CCL-304Rs like a two-storied structure. Although dip switches settings are basically the same as the settings shown in above, it is necessary to make settings for each of the two SW12. For further information, see **Chapter 5 of Installation Manual.**

| | |
|---|---|
| Factory default setting | (bit1-bit2-bit3-bit4) |
| SW11-upper | OFF-OFF-OFF-ON |
| SW11-lower | OFF-OFF-ON-ON |
| SW13-both | OFF-OFF-OFF-OFF |

- Setting of upper CCL-304R, SW12 (radar connection setting)

Radar Connection Setting

| | | |
|---|---|---|
| 1 | ON | No. 1 display unit connected |
| | OFF | No. 1 display unit NOT connected |
| 2 | ON | No. 1 antenna unit connected |
| | OFF | No. 1 antenna unit NOT connected |
| 3 | ON | No. 2 display unit connected |
| | OFF | No. 2 display unit NOT connected |
| 4 | ON | No. 2 antenna unit connected |
| | OFF | No. 2 antenna unit NOT connected |
| 5 | ON | No. 3 display unit connected |
| | OFF | No. 3 display unit NOT connected |
| 6 | ON | No. 3 antenna unit connected |
| | OFF | No. 3 antenna unit NOT connected |
| 7 | ON | No. 4 display unit connected |
| | OFF | No. 4 display unit NOT connected |
| 8 | ON | No. 4 antenna unit connected |
| | OFF | No. 4 antenna unit NOT connected |

- Setting of lower CCL-304R, SW12 (radar connection setting)

Radar Connection Setting

| | | |
|---|---|---|
| 1 | ON | No. 5 display unit connected |
| | OFF | No. 5 display unit NOT connected |
| 2 | ON | No. 5 antenna unit connected |
| | OFF | No. 5 antenna unit NOT connected |
| 3 | ON | No. 6 display unit connected |
| | OFF | No. 6 display unit NOT connected |
| 4 | ON | No. 6 antenna unit connected |
| | OFF | No. 6 antenna unit NOT connected |
| 5 | ON | No. 7 display unit connected |
| | OFF | No. 7 display unit NOT connected |
| 6 | ON | No. 7 antenna unit connected |
| | OFF | No. 7 antenna unit NOT connected |
| 7 | ON | No. 8 display unit connected |
| | OFF | No. 8 display unit NOT connected |
| 8 | ON | No. 8 antenna unit connected |
| | OFF | No. 8 antenna unit NOT connected |