HYUNDAI

USER'S MANUAL
for HD-BSC 960 and HD-MIC 1900

1999. 3

Copyright 1999 Hyundai Electronics Industries Co., Ltd.

All rights are reserved. No part of this document may be used or reproduced in any means without the prior written permission of the copyright holders.

Table of Contents

Chapter 1. System Overview

1.1 Purpose of this document

1.2 Features of Hyundai CDMA System

1.3 Overview

Chapter 2. BSC Basics

2.1 System Overview and Specification

2.1.1 Overview

2.1.2 Specifications and Characteristics

2.2 H/W Structure and Function

2.2.1 Overview

2.2.2 Structure of Subsystem

2.3 S/W Structure and Function

2.3.1 Overview

2.3.2 Structure

Chapter 3. BSM Operation & Administration

3.1 BSM Operation

3.1.1 Overview

3.1.2 Main Display Structure

3.1.3 Main Button

3.1.4 Command Buttons

3.1.5 Service Button

3.1.6 Operations of "Alarm" window

3.2 System Status Management

3.2.1 System Status Test

3.2.2 System Diagnosis

3.2.3 Statistics

3.3 Data Management

3.3.1 Access Channel Parameter

3.3.2 Access Parameter

Chapter 1 System Overview

1.1 Purpose of this document

This chapter contains description of Hyundai Micro-BTS PCS System that is operating on 800MHz and 1.9GHz frequency band, repectively.

1.2 Features of Hyundai CDMA System

There are two sub-systems in Hyundai CDMA system ; Micro-BTS and BSC. BSC interfaces with switching equipment and has roles of vocoding and call processing. Micro-BTS is functionally located between MS (Mobile Station) and BSC. Hyundai Micro-BTS has channel resource unit and radio frequency RF unit similar to the conventional 3-Sector BTS. Contrary to conventional 3-Sector BTS, Hyundai Micro-BTS is small in size, easily can be installed and maintained, and is very cheap in cost.

1.3 Overview

Hyundai Micro-BTS system can support 2FA/3Sector using 2 racks, but Micro-BTS system is composed of 1FA/3sector system for the FCC authorization. Thus this manual will describe all of the specifications based on 1FA/3sector system.

The system configuration is shown in Figure 1.1. In this configuration, there are 1 BSC and 3 Micro-BTS systems. Each Micro-BTS system is separately located in 3 sites. Micro-BTS can use 2 types of antenna subsystem, RRU (Remote RF Unit) and AAU (Active Antenna Unit). RRU is connected to Micro-BTS main system through AIU (Antenna Interface Unit) and AAU through AIDU (Active Internal Distribution Unit). In case of trunk line, we have several solutions, T1 and E1. We use T1 trunk line in USA. It means that we do not use HLEA but HLTA as trunk card.

BSM manages and maintains Micro-BTS and BSC. It communicates with each system by transmitting and receiving packets through LCIN. Its features include performance management, configuration management, fault management, etc..

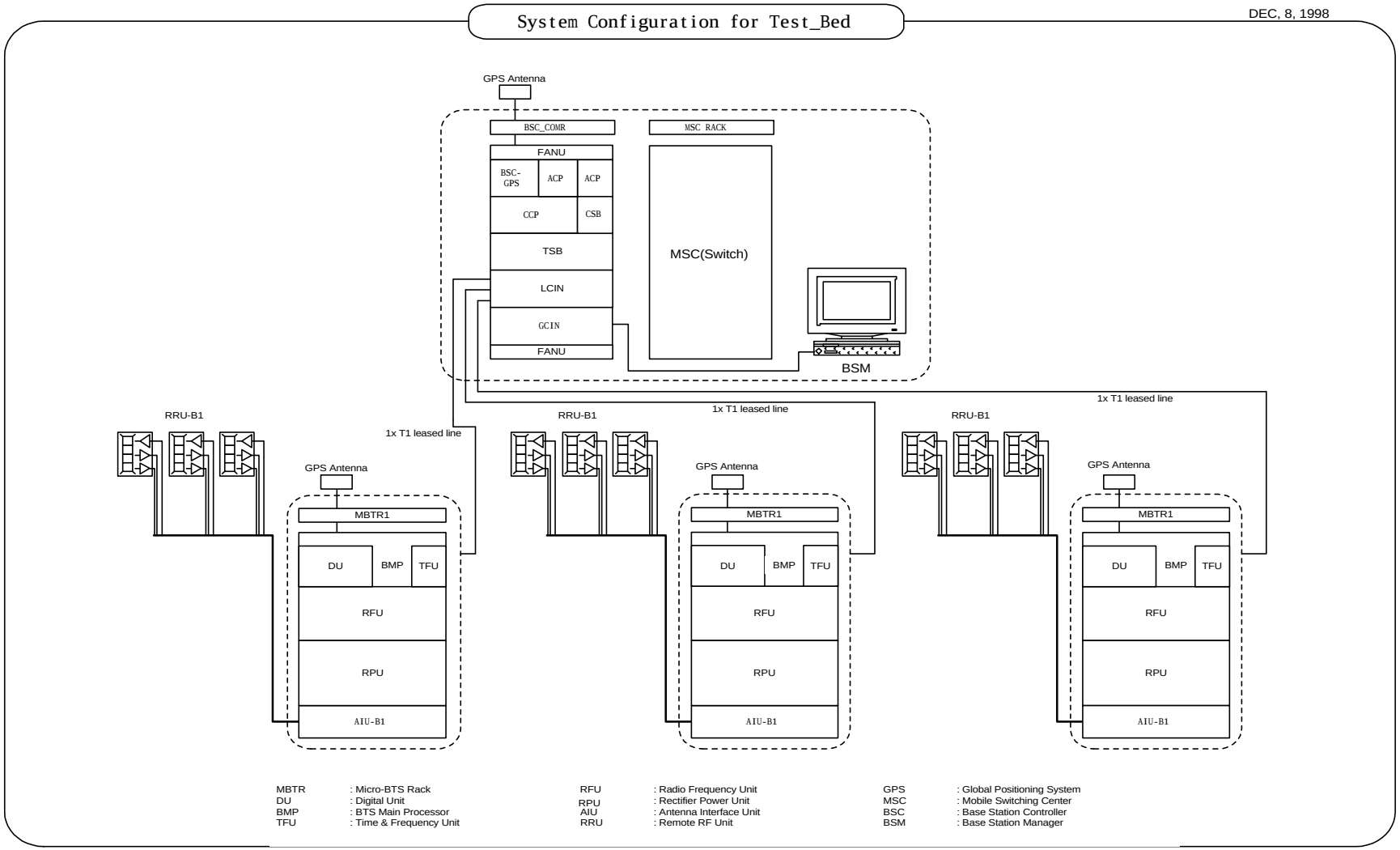

Figure 1.1 Configuration of system for field trial

3.3.3 Information of Micro-BTS Configuration
3.3.4 Base Station CDMA Environment
3.3.5 Base Station CDMA Information
3.3.6 Base Station Channel List Message
3.3.7 Extended System Parameter Information
3.3.8 Forward Link Power Information
3.3.9 Paging Channel Parameter
3.3.10 Psync Channel Parameter
3.3.11 RFC Parameter
3.3.12 Forward Link Power Control Data
3.3.13 Reverse Link Power Control Data
3.3.14 Base Station Cell Information
3.3.15 Corresponding Sector Information of Micro-BTS
3.3.16 Sync Channel Message
3.3.17 System Parameter
3.3.18 System Parameter Message
3.3.19 Traffic Channel Parameter
3.4 Call Processing System
3.4.1 Overview
3.4.2 Call Processing Flow
3.4.3 Call Trace
3.4.4 Call Release Reason and State

Chapter 4. BSC References

4.1 Rack Configuration
4.2 DIP Switch & Strap
4.2.1 Summary
4.2.2 Purpose
4.2.3 Address Setting in Common
4.2.4 MCDA (Main Control & Duplication board Assembly-A1)
4.2.5 CIFA-A1 (Cin Interface Function board Assembly-A1)
4.2.6 HICA-A2 (High capacity Ipc Control board Assembly-A2)
4.2.7 HRNA-A2 (High capacity Routing Node Assembly-A2)

4.2.8 HNTA-A2 (High capacity ipc Node & T1 interface Assembly-A2)
4.2.9 TFSA-A1 (Time & Frequency Split Assembly-A1)
4.2.10 TSGA-A1 (Time & frequency Splitting Generation Assembly-A1)
4.2.11 TFDA-A1 (Time & Frequency Distribution Assembly-A1)
4.2.12 VSIA-C1 (Vocoder Selector Interface Assembly-C1)
4.2.13 VSOA-A1 (Vocoder Selector Operation Assembly-A1)
4.2.14 CHBB-A1 (Cin Hipc Back Board-A1)
4.2.15 CCBB-A1 (CCp Back wiring Board-A1)
4.2.16 ACPA-A1 (Alarm Control Processor Assembly-A1)
4.2.17 SDBB-A1 (CKd Split & Distributed Back Board-A1)
4.2.18 TSBB-A1 (TSb Back Board-A1)
4.2.19 BABB-A1 (Bsc Alarm Back Board-A1)
4.2.20 HSBB-A1 (HIPC Small BackBoard-A1)
4.3 LED Descriptions
4.4 Command List
4.5 Acronym

Chapter 5. Micro-BTS Basics

5.1 System Overview and Specification
5.1.1 Overview
5.1.2 Functions
5.1.3 System Specification
5.2 Micro-BTS Structure and Configuration
5.2.1 Micro-BTS Structure
5.2.2 Micro-BTS Block Configuration
5.3 H/W Structure and Function
5.3.1 BMP
5.3.2 DU
5.3.3 TFU
5.3.4 RFU
5.3.5 Antenna Subsystem (AIU-RRU, AIDU-AAU)
5.3.6 BTU
5.3.7 RPU

5.4 S/W Structure and Function

5.4.1 Overview

5.4.2 Basic Functions

5.5 Abbreviations

Chapter 6. Micro-BTS References

6.1 Rack Configuration

6.1.1 MBTR I (1.9GHz)

6.1.2 MBTR I (800MHz)

6.2 DIP Switch and Strap

6.2.1 Summary

6.2.2 Purpose

6.2.3 Address Setting in Common

6.2.4 BMPA-B1

6.2.5 CDCA-B1

6.2.6 BICA-B1

6.2.7 HLTA-B1

6.3 LED Descriptions

6.3.1 BMP

6.3.2 DU

6.3.3 TFU

6.3.4 RPU

6.4 Alarm Source List

6.5 Abbreviations

Chapter 2 BSC Basics

2.1 System Overview and Specification

2.1.1 Overview

BSC is located between MSC and BTS. It carries out a wire/wireless link control function, handoff function and transcoding function. And it is made up of a LCIN, GCIN, TSB, CCP, CSB, CKD, BSC-GPS, and BSM block. [Refer to Fig.2.1].

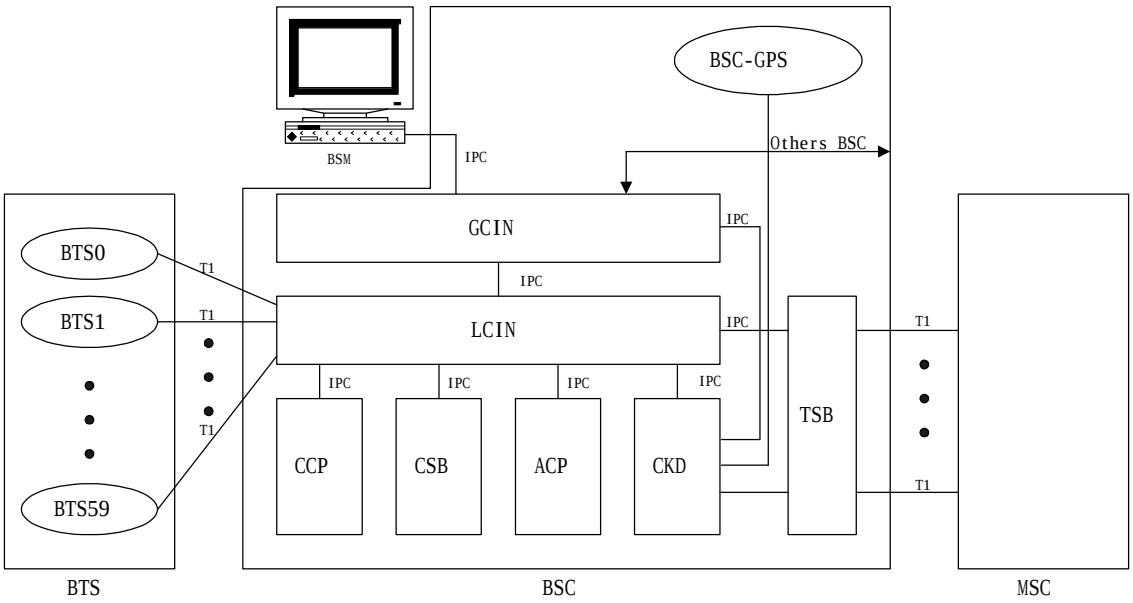

Figure 2.1 Configuration of BSC

Each block does following functions.

- BSM is a system used to operate the entire BSC and BTS, to manage their resources, status and configuration, and to execute the user interface, and maintenance. It consists of a SUN Sparc Workstation and the various types of input/output devices for enhancing user's convenience.

- LCIN is a network that provides the communication paths of packet-type data between subsystems. LCIN routes and transmits packet data within BSC and it has trunk interface function between BSC and BTS.

- GCIN is a network that provides the communication paths of packet-type data between LCINs. GCIN also provides the communication path between BSM and other processor.

- CCP is a processor system that carries out the call processing and soft-handoff processing function for entire BSC, allocates wireless resource of BSC, and controls overload of vocoders and the main processor of BSC.

- CSB converts the IPC protocol of CCP into the No.7 protocol to access to MSC through the trunk of TSB block.

- BSC-GPS is a system for providing the reference time used in the CDMA system. CKD converts the clocks received from BSC-GPS and then, distributes synchronization signals required for the system.

- ACP collects the various types of alarm status in BSC and then, reports them to BSM in order to carry out system O & M efficiently.

- TSB is connected to MSC with T1 trunk. TSB converts the PCM voice signal of 64Kbps received through this with the QCELP algorithm and it sends the converted signal to the channel unit of BTS. In addition, it carries out the reverse function of the above. Moreover, after being linked to the BTS, it executes a handoff function and power control function on radio link.

2.1.2 Specifications and Characteristics

2.1.2.1 Specifications of BSC

(1) Capacities

- Number of controlled BTS : 60BTS/BSC
- Number of voice channel : 960 CH/BSC
- Number of BSC which are inter-accessible : 12BSC/MSC
- Maximum capable subscribers : 30,000 subscribers/BSC (Br 1%, 0.03Erlang)

(2) Link protocol

- BSC-MSC Link
  T1 for Traffic
  SS No.7 for signaling & control (ITU-T STD)
- BTS-BSC Link
  Un-channelized T1

(3) Power
- DC - 48 V
- Integration of storage battery is possible.

(4) Specification of LCIN
- Up to 112 T1 Trunk to BTS
- Function of Remote Loop-back
- Function of transmit/receive of Remote alarm

(5) Specification of CCP & CSB
- Use 32bit Main Processor
- Interface function with LCIN
- Interface to MSC

(6) Specification of TSB
- Interface to MSC with T1
- Accepts 48 Transcoding channel per TSB
- 12 Vocoder Channels/Channel Card

(7) Specification of GCIN
- 4 links to a LCIN
- Up to 12 LCIN connection capability
- RS-422 links for LCIN links, BSM and other processors

(8) Specification of BSM
- Main Frame : Use commercial workstation
- Main Processor : SPARC Processor processing rate more than 80MIPS
- Main Memory : more than 64Mbyte
- Hard Disk : more than 2Gbyte
- Tape Drive : more than 150Mbyte
- Parallel Port : Connect with High Speed Printer
- HDLC Card : support the rate more than 2.048Mbps and functions of X.25 connection

- Audio I/O Port : supply alarm function
- Software : Motif/X11, Informix DBMS

2.1.2.2 Characteristics

(1) Distributed control structure and duplication of main part

(2) Using the link that is capable of high reliability and high speed data transmit

(3) Increasing the trunk efficiency by packet transmit

(4) Real-time processing of system by real-time OS

2.2 H/W Structure and Function

2.2.1 Overview

Hardware structure of BSC is shown in Fig.2.2 and traffic and data communication is accomplished in connection with BTS, CCP, CSB, TSB, BSC-GPS & ACP and BSM with placing LCIN and GCIN as a Packet Router. For interconnection between BSC, extension of system is possible using private Router (HRNA-A2). Therefore, structure is designed that soft handoff is possible between BTSs controlled by different BSCs

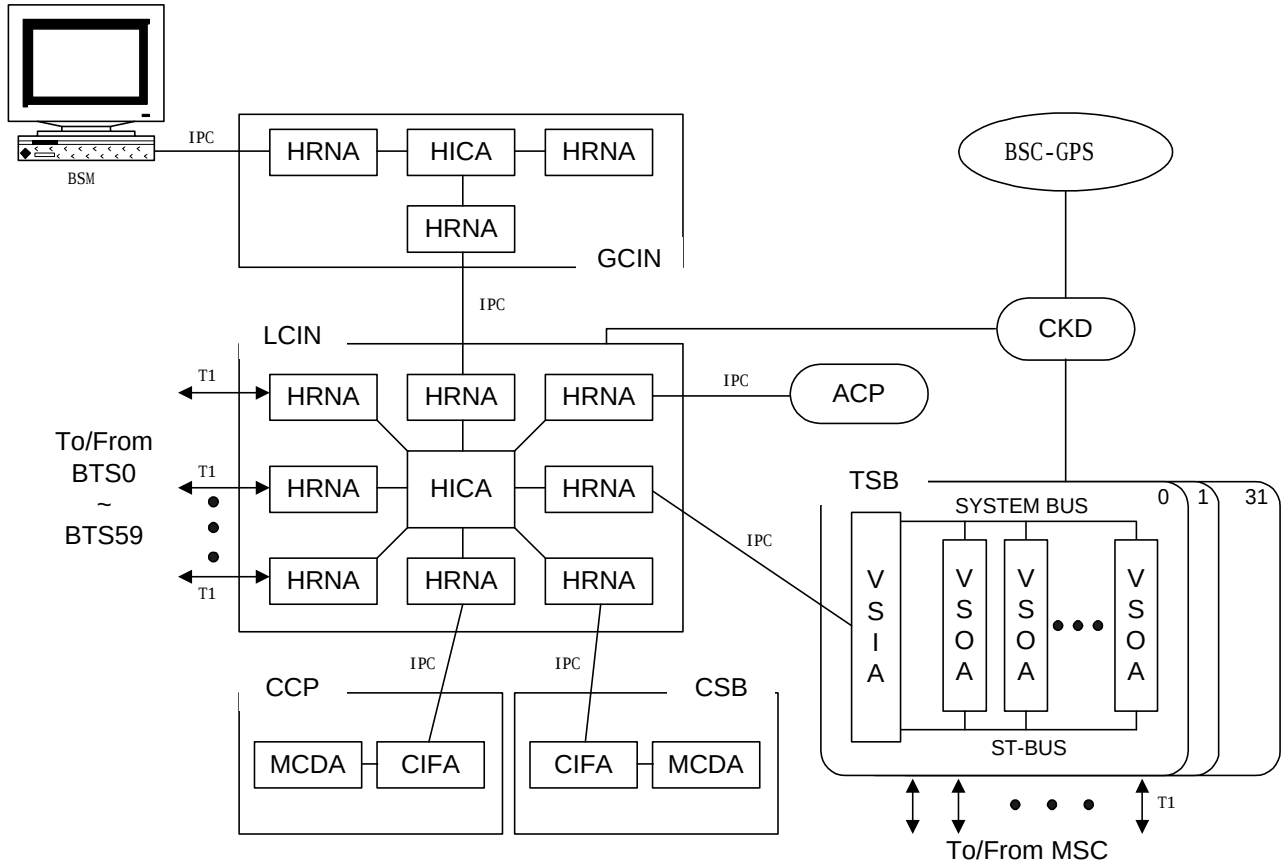

Figure 2.2 H/W Structure of BSC

2.2.2 Structure of Subsystem

2.2.2.1 LCIN (Local CDMA Interconnection Network)

LCIN receives Packet Data transmitted by each subsystem connected to BSC and routes the Packet Data to destination address that are added in overhead of Packet.

(1) Functions of LCIN

- CDMA Traffic Information Routing between BTS and TSB
- Information Routing between BTS, CCP.
- Internal information Routing among TSB, CCP, CSB, TFGA-A1 and ACP

(2) H/W Structure of LCIN

After LCIN converts Packet Data which are inputted by each subsystem in BSC to 16-bit parallel data, analyzes Packet Address and converts them again to Serial data via internal Routing and routes them to corresponding subsystem. LCIN consists of HICA-A2, HRNA-A2, HNTA-A2 and backboard CHBB-A1 card.

1) HICA-A2 (High-performance IPC Control Board Assembly-A2)

HICA-A2 performs network management functions of LCIN that is made up of nodes providing communication path between processor of BSC and BTS.
For management of communication network, LCIN have control and maintenance channel (M-BUS) responsible for fault processing and node status monitoring and communication channel (U-Link) with other processor. HICA-A2 generates BUS arbitration control signal between nodes of D-BUS and exchanges common bus for data of each node. HICA-A2 performs each PBA's status management and maintenance of LCIN block, and status management and maintenance of Link.

2) HRNA-A2 (High performance IPC Routing Node Assembly-A2)

HRNA-A2 have 8 Nodes. It is a PBA having the function of node that is basic unit of IPC (Inter Processor Communication) in LCIN. HRNA-A2 is an interface board by which each subsystem can be accessed to LCIN. After converting the packet data that are inputted through RS-422 parallel interface, it outputs the converted data on packet bus (D-BUS) of LCIN according to the routing control signal of HICA-A2. HRNA-A2 performs that extracts 3 bytes destination address of Packet Data that is loaded on D-Bus and accepts the packet only if the compared result of destination address of Packet Data with node address of itself are equal, then converts it to serial type and transmits it to each subsystem.

HRNA-A2 performs the functions that receives control command from HICA-A2 and reports the status of HRNA-A2 using dualized serial control bus (M-BUS).
HRNA-A2 has the functions that detects various fault per node and D-BUS fault occurs in operation, and reports detected faults to HICA-A2 through M-BUS.
HRNA-A2 performs fault recovery functions by initializing fault detected node and switching of D-BUS.

3) HNTA-A2 (High Performance IPC Node & T1 trunk interface Board Assembly-A2)
HNTA-A2 is used for linking T1 trunk in LCIN. BSC and BTS are accessed each other through Digital Trunk and HNTA-A2 performs link functions of T1 Trunk Line.
HNTA-A2 performs functions of Node and link of Trunks simultaneously, and have 8 node and 8 T1 digital trunk interface.
HNTA-A2 performs the functions that receives control command from HICA-A2 through M-BUS and exchanges packet between node through D-BUS.
HNTA-A2 performs the functions that tries to recover by fault detection of D-BUS and monitors and reports the status of Trunk.

(3) Structure Diagram of LCIN

- LCIN consists of Routing functions based on BSC unit.
- LCIN consists of BTS link interface functions using T1 Trunk Line.

The following Fig.2.3 describes structure diagram of LCIN

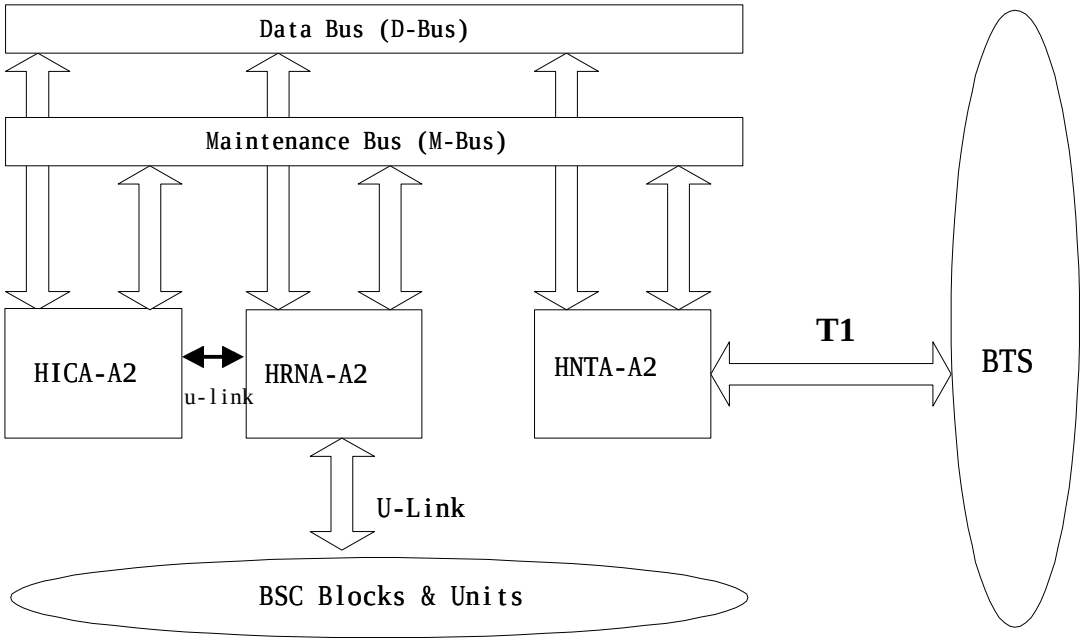

Figure 2.3 Structure Diagram of LCIN

(4) Address System

LCIN uses 3 byte address system enough to process traffic resources in BS (BTS & BSC).

2.2.2.2 TSB (Transcoding & Selector Bank)

(1) Functions of TSB

- CCP by MSC allocates resources when call setup
- provides information about code transition by mobile and registration in the process of call processing
- removes vocoder when call releases
- corresponding Card to Channel Element of BTS
- performs vocoder functions of voice
- performs functions of Rate Adaptation of Data and Coder/Decoder
- performs function of Selection for Soft-Handoff
- performs Power Control functions (Forward Power Control & Open Loop Power Control)

(2) Hardware structure of TSB

- TSB consists of VSIA-C1 connected to LCIN and VSOA-A1 mounted with vocoder
- has 92 Transcoding Channel per TSB 1Unit (T1)
- VSIA-C1 performs functions that receives serial Packet data inputted from LCIN, converts to parallel data, transmits to VSOA-A1 mounted with vocoder, receives data vocoded in VSOA-A1 and converted to PCM type through ST-BUS, makes data multiplex and transmits to MSC.
- VSOA-A1 is mounted with 12 vocoder performs functions that converts QCELP Packet Data to PCM Voice Code and PCM Voice Code to QCELP Packet Data.

(3) Structure Diagram of TSB

The following Fig.2.4 describes structure diagram of TSB

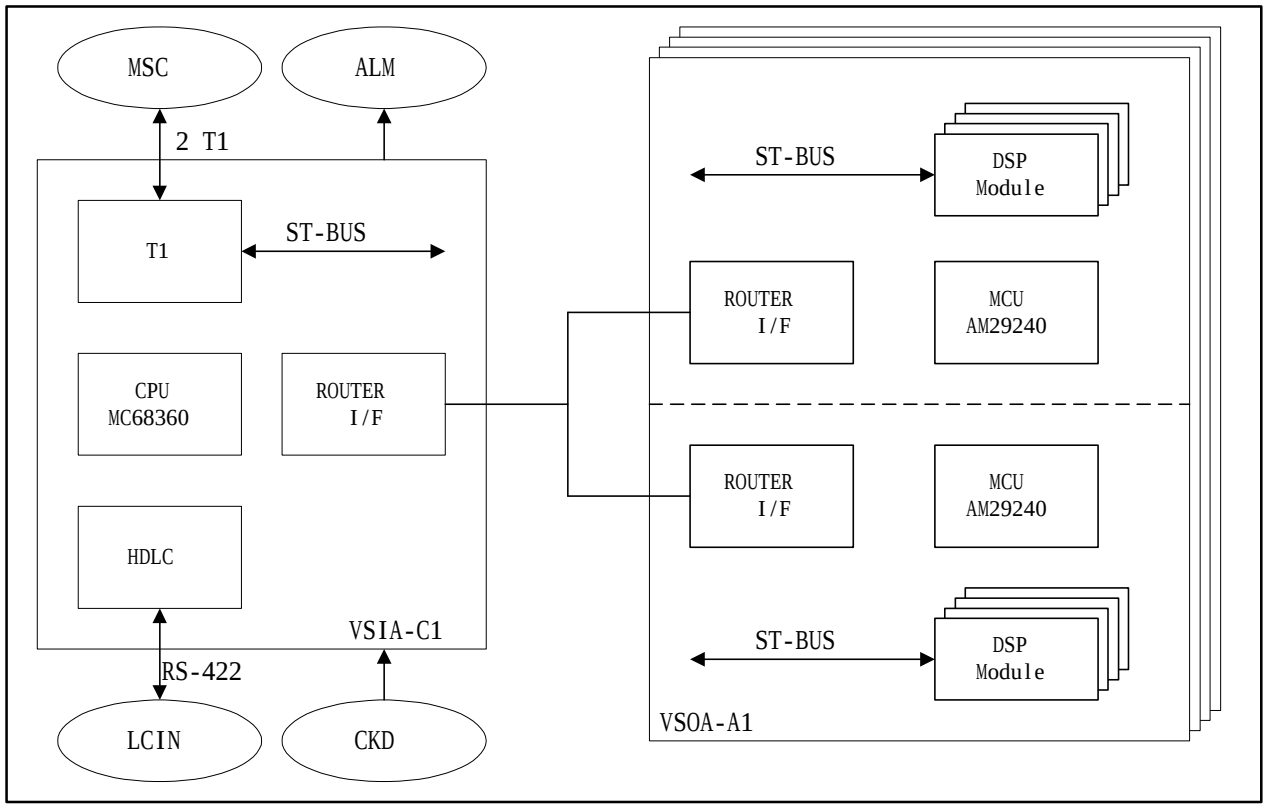

Figure 2.4 Structure Diagram of TSB

2.2.2.3 CCP (Call Control Processor)

(1) Functions of CCP

- performs all of call processing related control functions of BSC
- exchanges CDMA related information among BTS, TSB and MSC
- controls Soft-Handoff and Hard-Handoff
- supports Paging
- controls overload and manages TSB

(2) Hardware structure of CCP, CSB

CCP consists of main processor MCDA and CIFA responsible for inter-processor communication with HRNA in LCIN.

When using No.7 Signaling mode, CCP system is connected to CSB block through CIFA-A1 via LCIN block and CSB block transfers this message to MSC through Trunk after converting this message appropriate for No.7 Protocol.

1) MCDA (Main Control Duplication Assembly)

MCDA communicates with CIFA-A1 using MPS-bus. It is responsible for communication with dualized block. If Power of MCDA is ON, Booter operates, and

MCDA determines whether active or standby of itself through S channel of MFP in result of negotiation with other MCDA and requests loading. If MCDA operates normally after OS Loading, MCDA controls call processing and manages Selector.

2) CIFA-A1 (CIN Interface Board Assembly)

CIFA-A1 is an interface board responsible for communication with external and has functions of MPS-bus link and direct DATA communication with CIN block.

For connection with LCIN, CIFA-A1 transmits and receives control information using Address Decoding & Zero insertion/deletion, CRC generation and check function through HDLC Protocol.

3) Structure Diagram of CCP, CSB

The following Fig.2.5 describes structure of CCP

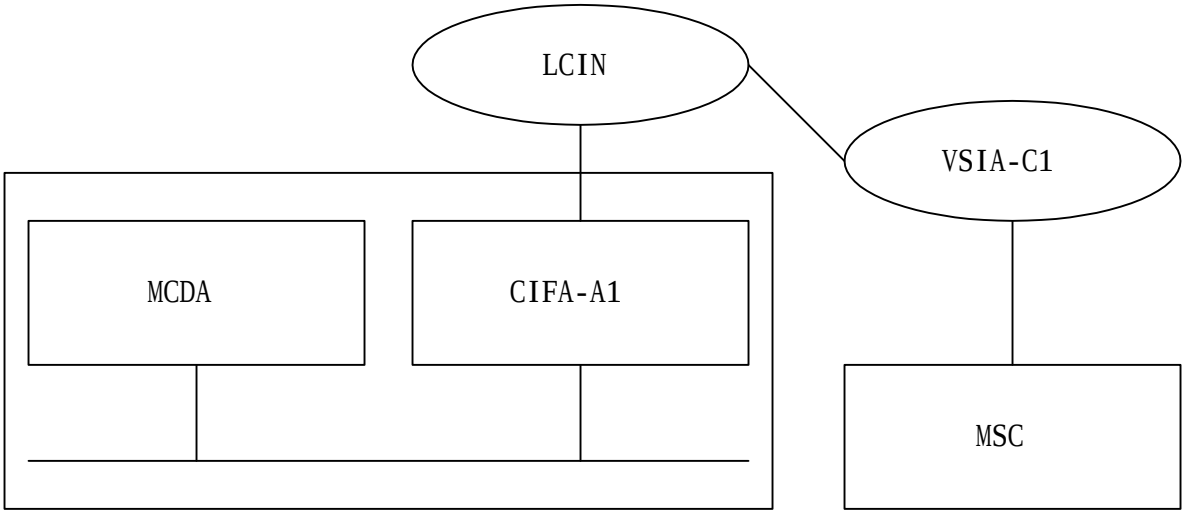

Figure 2.5 Structure of CCP

2.2.2.5 BSC-GPS/CKD (Clock Distributor)

(1) Functions of BSC-GPS/CKD

- BSC-GPS block is located in CMNR of BSC (Base Station Controller). When 1PPS and 10MHz from GBSU-A1 (GPS) are inputted to TFSA-A1, then it converts and distributes them into clock necessary in BSC, and provides them through TFDA-A1 to TSB and LCIN. Number of providing clocks is 16 in minimum and 32 clocks in maximum.
- Distributed Clock : 4.096MHz, 2.048MHz, 1.544MHz, FP (8KHz), FOI (8KHz), 50Hz, 1Hz

(2) Hardware structure of BSC-GPS/CKD

BSC-GPS/CKD consists of GPS Receiver, TFSA-A1 that receives clock, Clock

generator (TFGA-A1) and Clock distributor (TFDA-A1).
The structure Diagram of CKD is shown in Figure 2.7.

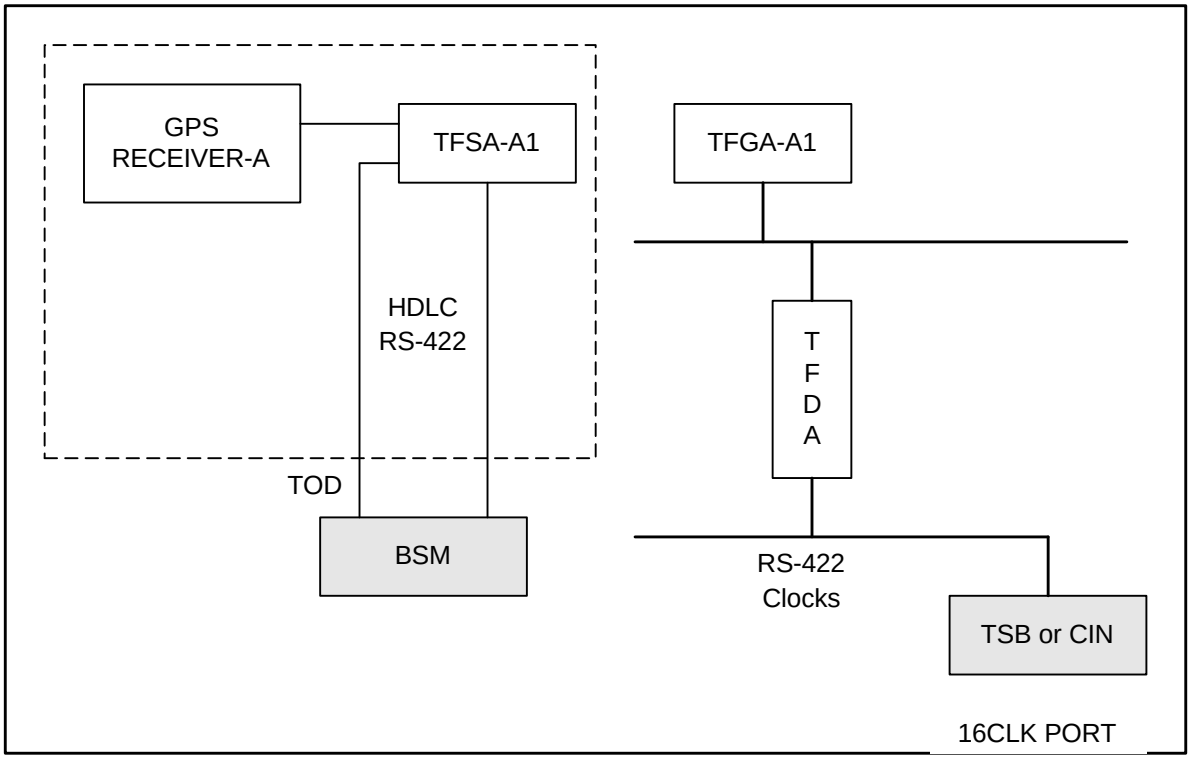

Figure 2.7 Structure Diagram of CKD

2.2.2.6 ACP (Alarm Control Processor)

(1) Structure and Functions of ACP

ACP block is located in BSC (Base Station Controller) and has functions of collecting alarm sources of each subsystem by H/W and reporting to BSM by S/W. This block is mounted one per one BSC and one ACP block is mounted on a ACPA-A1 board and can monitor 26 alarm ports in maximum. Each alarm port is connected to each subsystem of BSC more than one and monitors OFF-FAIL of important board and power module.

If system extends and number of alarm port is increased, additional ACP blocks can be mounted.

(2) Structure Diagram of ACP

The following Fig.2.8 describes structure diagram of ACP

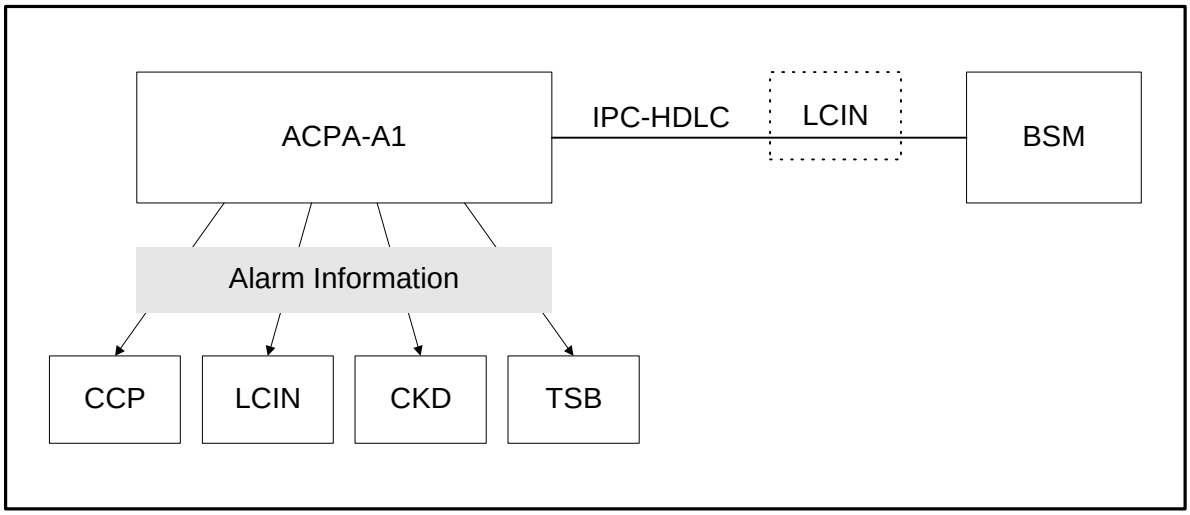

Figure 2.8 Structure Diagram of ACP

2.2.2.7 GCIN (Global CDMA Interconnection Network)

GCIN receives Packet Data transmitted by each subsystem connected to GCIN . GCIN also receives Packet Data transmitted from a LCIN to other LCIN. GCIN routes the Packet Data to destination address which are added in overhead of Packet.

(1) Functions of GCIN

- CDMA Traffic Information Routing between LCINs
- Information Routing between LCINs and BSM.

- Internal information Routing among TFSA-A1, HICA-A2 , BSM.

(2) H/W Structure of GCIN

GCIN converts Packet Data which are inputted by each link from LCIN or subsystems in GCIN to 16-bit parallel data, GCIN analyzes Packet Address and converts them again to Serial data via internal Routing and routes them to corresponding subsystem or links. GCIN consists of HICA-A2, HRNA-A2, and backboard HSBB-A1 card.

1) HICA-A2 (High-performance IPC Control Board Assembly-A2)

HICA-A2 performs network management functions of GCIN which is made up of nodes providing communication path between processor of BSC and BTS.
For management of communication network, GCIN has control and maintenance channel (M-BUS) responsible for fault processing and node status monitoring and communication channel (U-Link) with other processor. HICA-A2 generates BUS arbitration control signal between nodes of D-BUS, common bus for data exchange of each node. HICA-A2 performs each PBA's status management and maintenance of LCIN block, and status management and maintenance of Link.

2) HRNA-A2 (High performance IPC Routing Node Assembly-A2)

HRNA-A2 has 8 Nodes. It is a PBA having the function of node which is basic unit of IPC (Inter Processor Communication) in GCIN. HRNA-A2 is an interface board by which each subsystem can be accessed to GCIN. After converting the packet data which are inputted through RS-422 parallel interface, it outputs the converted data on packet bus (D-BUS) of GCIN according to the routing control signal of HICA-A2.
HRNA-A2 performs that extracts 3 bytes destination address of Packet Data which are loaded on D-Bus and accepts the packet only if the compared results of destination address of Packet Data with node address of itself are equal, then converts it to serial type and transmits it to each subsystem.
HRNA-A2 performs the functions that receives control command from HICA-A2 and reports the status of HRNA-A2 using dualized serial control bus (M-BUS).
HRNA-A2 have the functions that detects various fault per node and D-BUS fault occurs in operation, and reports detected faults to HICA-A2 through M-BUS.
HRNA-A2 performs fault recovery functions by initializing fault detected node and switching of D-BUS.

(3) Structure Diagram of GCIN

- GCIN consists of Routing functions between LCINs.
- GCIN consists of Routing functions between subsystems in GCIN.

The following Fig.2.9 describes structure diagram of GCIN

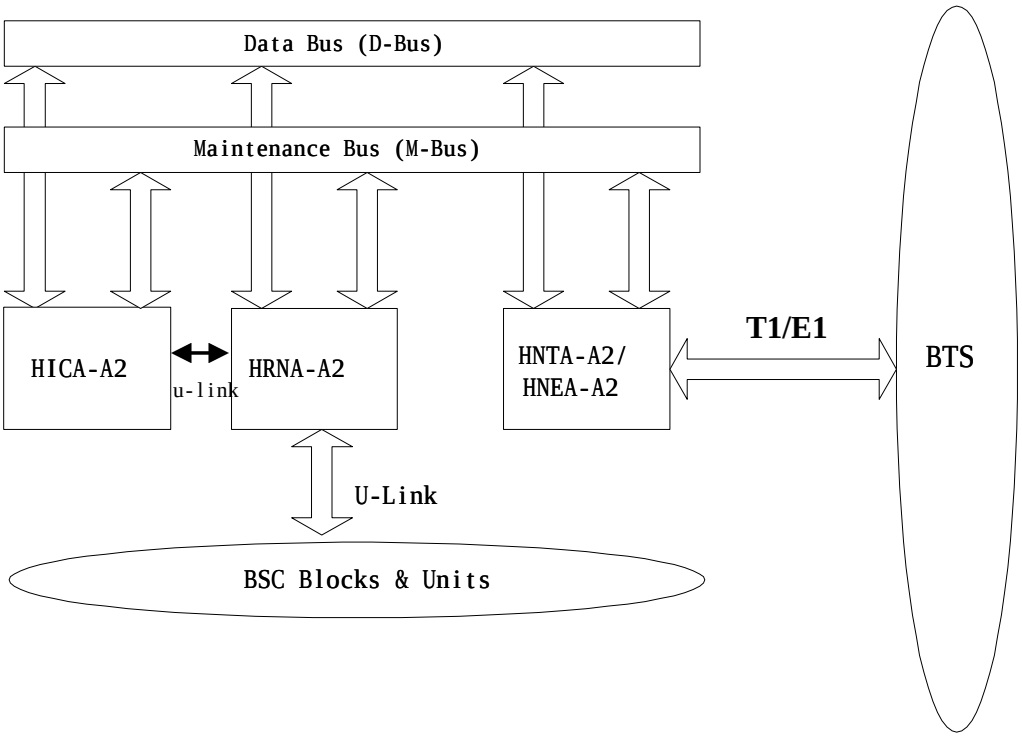

Figure 2.9 Structure Diagram of GCIN

(4) Address System

GCIN uses 3 byte address system enough to process traffic resources in BS (BTS & BSC).

2.3 S/W Structure and Function

2.3.1 Overview

Software of CCP and TSB consists of an operation and maintenance Software and a control and resource management Software of each subsystem.
Software of BSM can largely be divided into an operation function and a general function. The operation function consists of a software taking charge of system loading, system structure management and performance management and a software taking charge of maintenance function that detects, isolates and recovers abnormally-running device.
The general function consists of software taking charge of data communication function, data management function, and manager link function.

2.3.2 Structure

2.3.2.1 CCP Software

(1) CCOX (Call Control eXecution)

- Origination and Termination call processing processed by the unit of Process CCOX registers and manages their call by the unit of Process and releases Process by Call Release function.
- Origination call processing, in case of receiving Call Request of Handset from BS, allocates selector and ensures traffic channel by using resource allocation function and requests Call Setup to MSC. If the approval from MSC is identified, Call Setup of Origination call processing is completed
- Termination call processing, in case of receiving Paging Request from MSC, allocates selector and ensures traffic channel by using resource allocation function and completes Call Setup of termination call processing
- Origination and Termination Call Release are performed in case of requesting Call Release by telephone network subscriber or Handset, and cause Call Path and wireless channel and inform it of data processing function
- also, performs designated path CALL SETUP and CALL TRACE function

(2) CDAX (CCP Database Access eXecution)

- It is a library that supplies various functions able to read, write and access the operation information in CCP and the PLD saving configuration information.

(3) CRAX (CCP Resource Allocation eXecution)

- initialization of configuration information of CCP
- statistics library supply
- available call resource library supply

(4) CMMX (CCP Measurement Manager eXecution)

This block has a function for measurement and statistics processing.

- statistics data collection & measurement
- statistics data report
- linking with call processing S/W & library call
- statistics count decision (event collection /accumulation/totalization)

(5) CDIAX (CCP DIAgnosis eXecution)

It consists of diagnostic function and performance drop prevention function by diagnosis in initialization and system operation

- diagnosis for process, Device, path
- automatic diagnosis for vocoder and link

(6) CSHX (CCP Status Handling eXecution)

It consists of functions for state management of system

- processor state checking
- management of vocoder and link state
- information supply for available resource

(7) CRMX (CCP Resource Management eXecution))

It consists of functions for resource configuration management

- configuration control of resource
- resource data processing by MMC
- common data (BCP&CCP Common Data) loading and data display

(8) CPLX (CCP Process Loader eXecution)

It consists of initial Loading and Loading function in operation.

- Start and Restart of initial system

- Start and Restart of process
- Stand-by Loading
- initialization (data initialization, process initialization and state identification)

2.3.2.2 Software Structure of CCP

The following Fig.2.10 describes S/W structure of CCP

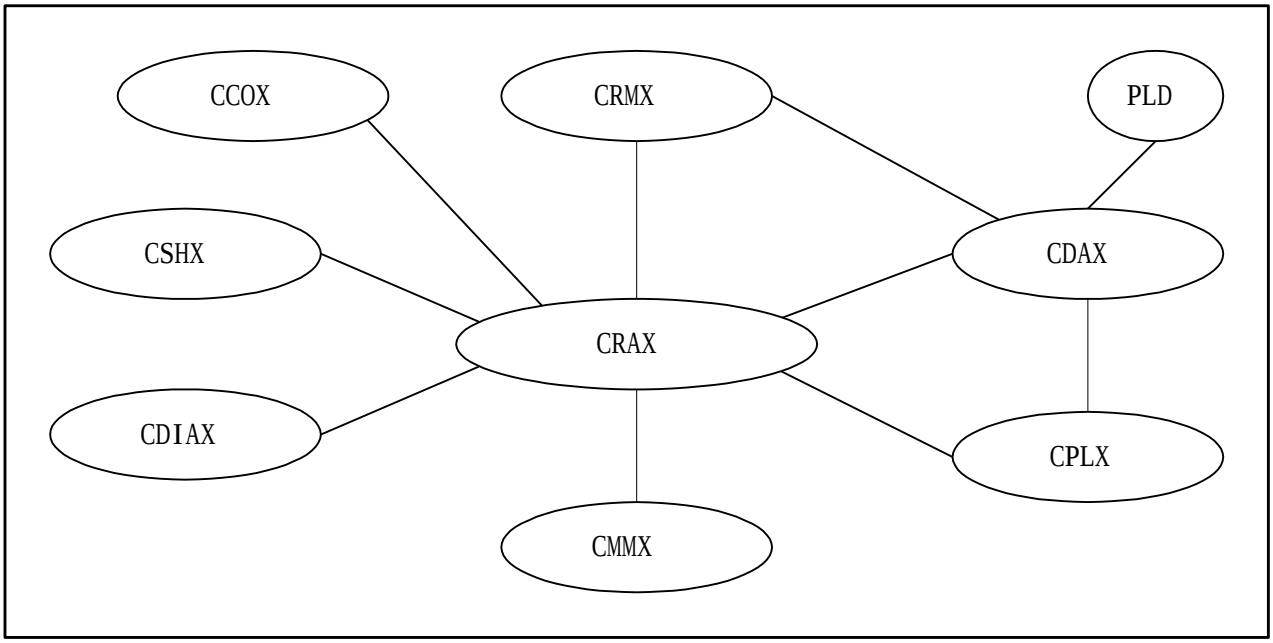

Figure 2.10 S/W Structure of CCP

2.3.2.3 TSB S/W Structure

TSB S/W (from now on, SVPX) is the S/W block driven over VSOA board, since two Processors exist in one board, each Processor process six channels. SVPX processes traffics and signals coming from Mobile, CE and CCP. SVPX consists of following Tasks. [Refer to Fig.2.11]

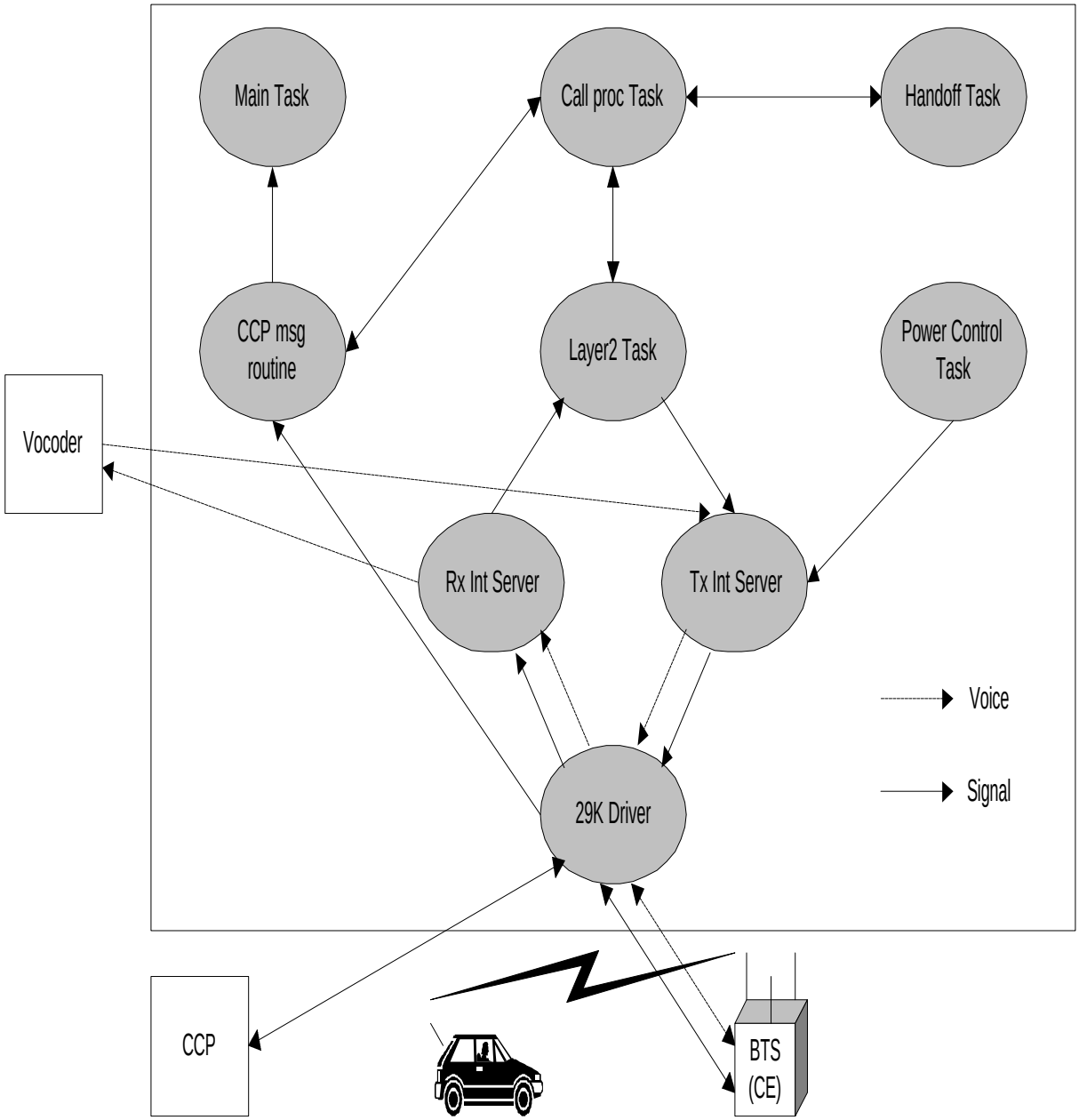

Figure 2.11 TSB S/W Structure

(1) 29K Driver

As initial Task after SVPX is loaded , it initializes processor and plays an interface role between AP and Devices. Other tasks are processed over this Driver

(2) Main Task

If main task takes over control from Driver, it initializes Queue and Vocoder state and generates task and initializes it.

(3) Rx Interrupt Server

Traffic Frame transmits and receives one frame every 20msec per call. Some of reverse frame coming from Mobile every 20msec contain a vocoded voice data and a CAI (Common Air Interface) message for call processing.

The Voice data is transmitted into Vocoder, the CAI message is transmitted into Callproc Task, and control message coming from CE is also transmitted into Callproc Task.

Rx Interrupt server estimates frame quality by Quality Metric value and transmits that into Reverse Power Control, practices Rx Frame Selection in case of handoff.

(4) Tx Interrupt Server

It makes Forward Frame every 20ms and also transmits that. In case of handoff, it multicasts to maximum three BTSs.

(5) Layer2 Task

It processes ACK_SEQ, MSG_SEQ and ACK_REQ field of respective message to accomplish reliable message exchange between Mobile, CE and BS.

It processes Ack of a receiving message and retransmits a transmitting message in case of necessity

(6) Callproc Task

It performs appropriate call processing according to signal from Mobile, CE and CCP.

(7) Handoff Task

In case of processing control message related to Handoff, it is according to handoff decision of CCP. And it performs corresponding handoff type. Handoff type is largely divided into SOFTER H/O, SOFT H/O and HARD H/O.

(8) Power Control Task

According to PMRM (Power Measurement Report Message) or Erasure Indicator Bit coming from Mobile, it performs Forward Power Control indicating Forward Traffic Channel Gain adjustment into CE every 20ms and indicates Reverse Traffic Power adjustment of Mobile through CE every 1.25ms, after checking FER of Reverse Traffic Frame

2.3.2.4 BSM Software

(1) CDMX (Configuration Data Manager eXecution)

1) Block Summary and Working Function

A CDMX block manages some data such as operation parameter requested to perform Inherent function of BTS and BSC subsystems and hardware placement information. Also, the CDMX receives a command through manager link in BSM to supply coherence of data alternation and adaptation and processes that. And the CDMX saves the processed result in database and reports it to manager.

The CDMX consists of a CDM_interface unit which makes corresponding function work by analyzing the message received from UIM (User Interface Manager), a PLD_access unit for PLD access and a Data_send unit for data transmission into subsystem. After classifying the received message, The CDMX process the command and sends the processing result to UIM

2) Block Flowchart

The following Fig.2.12 describes CDMX block flowchart.

a. informs BIM that CDM is in normal state.

b. sends the processing results received from UIM for mamager's command for data processing.

c. In case of Data Change Request, send data to the CRM and receive result.

d. receives a PLD Change Request Message from the APP

e. sends processing result to the APP.

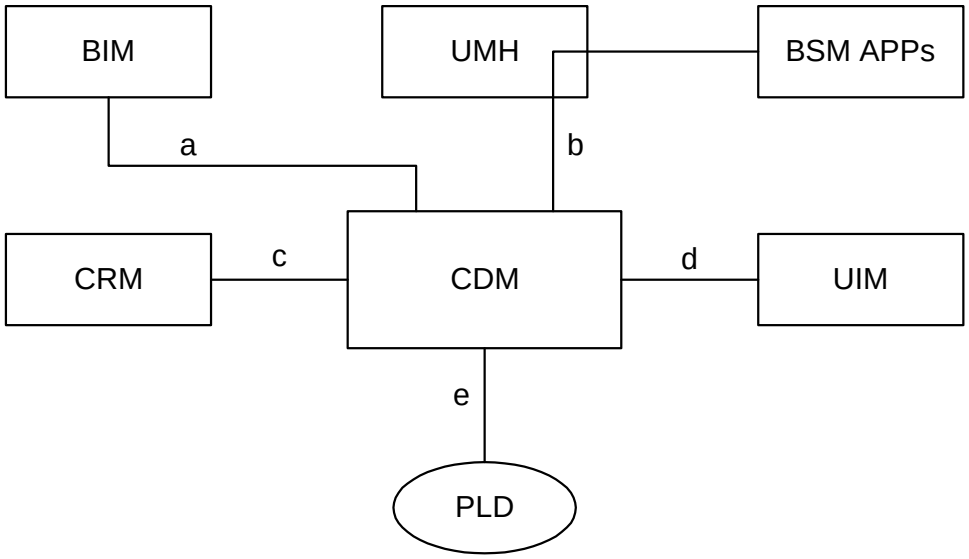

Figure 2.12 CDMX block flowchart

(2) SLX (System Loader Execution)

1) Block Summary and Working Function

During initialization of CCP and ACP subsystem, a SLX loads application blocks performed in CDMA system into CCP and ACP. The SLX renew database to manage loading history according to location information and state of system loaded in case of performing loading of each subsystem.

Function related to CCP out of Subsystem Restart and Block Switch function by MMC is processed by CPL. Function related to BCP, SIP and SVP is performed by inter-working with CPL, Booter of BCP, SIP, SVP, and PL. It supplies a loading history by MMC for manager.

Also, The SLX removes specific block out of application blocks performed in each subsystem or adds application block to specific subsystem.

2) Block Flowchart

The following Fig.2.13 describes SLX block flowchart.

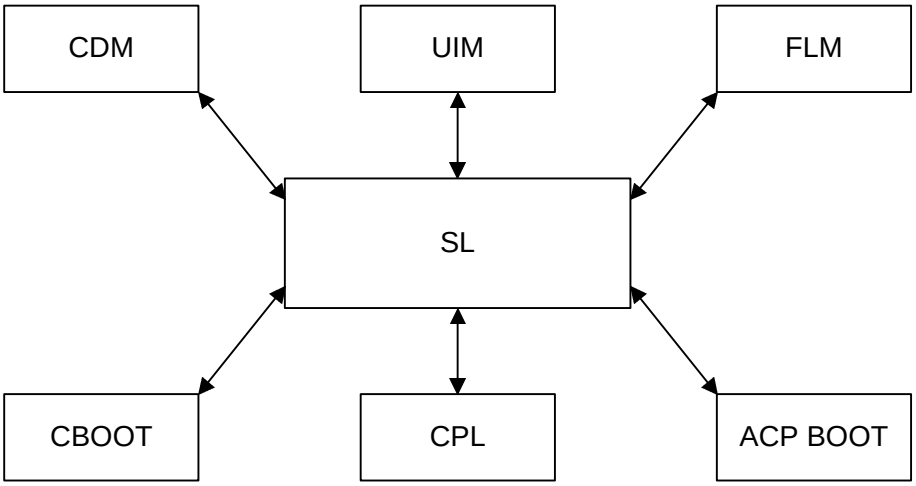

Figure 2.13 SLX Block Flowchart

(3) SMMX (Statistics Measurement Manager eXecution)

1) Block summary and working function

A SMMX block requests BSC system to measure performance data. The SMMX processes statistics of the measured data, saves it and outputs it. Also, the SMMX outputs statistics report output according to user's request by using a periodically

receiving performance data in BSC system. The SMMX can stop and start the measurement on system.

Software unit of SMM block consists of Command Processing Part, Signal Message Format Processing Part, Screen Output Format Part, and Database Processing Part. Command Processing Part processes command inputted by manager. Signal Message Format Processing Part formats the signal message which will be transmitted. Signal Message Unformatting Processing Part unformats the signal message. Screen Output Format Part outputs a statistical data on the BSM message output window. Database Processing Part manages the statistical database.

2) Block Flowchart

The following Fig.2.14 describes SMMX block flowchart.

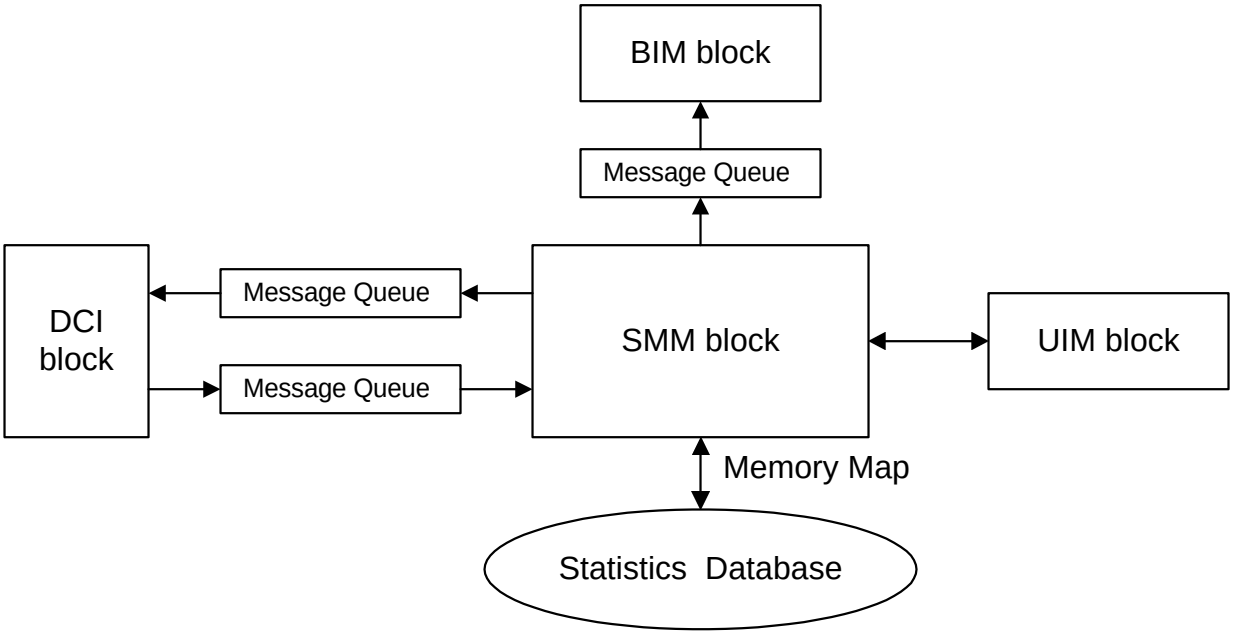

Figure 2.14 SMMX Block Flowchart

(4) FLMX (FauLt Management eXecution)

1) Block Summary and Working Function

A FLMX block has functions which process a fault and alarm message caused at BTS and BSC system. The received fault message of the FLMX block is related to the Fault detected by test and maintenance function of BTS and BSC system. If the state of fault is serious (i.e. fault classified into alarm), the FLMX informs manager of that by driving a message and an audible and visible alarm after deciding corresponding alarm grade. If the FLMX receives a command from manager, the FLMX initializes the database that has the current state information of alarm. Also the FLMX initializes a database for visible alarm which appears at the terminal and a database for audible alarm.

2) Block Flowchart

The following Fig.2.15 describes FLMX block flowchart.

a. receipt of manager's command from UIM block and report of result.

b. report Alarm and Fault processing result to OFH block .

c. send signal to STM block.

d. receipt of GPS state alarm from the SCM block

e. receipt of H/W alarm from ACP block

f. receipt of alarm from CIN

g. receipt of LCIN S/W alarm from CCP

h. receipt of BTS S/W alarm from BMP

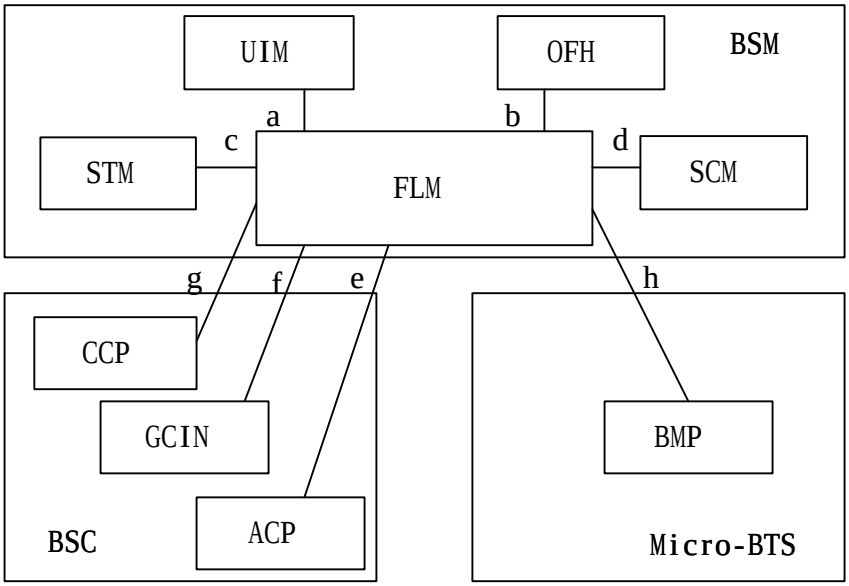

Figure 2.15 FLMX Block Flowchart

(5) TSMX (TeSt Manager eXecution)

1) Block Summary and Working Function

A TSMX block tests for the fault diagnosis of BTS and BSC system. The TSMX consists of a unit which analyzes command of manager, a unit which packs to send the analyzed message to corresponding subsystem, a unit which analyzes a execution result transmitted from subsystem and a unit for accessing database.

Also, the TSMX consists of a Temporary Processor executed by manager's request and a Permanent Processor which performs data management and processing of a receiving message.

2) Block Flowchart

The following Fig.2.16 describes TSMX block flowchart.

a. Test Request for DEVICE

b. Response for DEVICE Test Request

c. Test Request for BTS LINK and Channel Element

d. Response for BTS LINK and Channel Element Test Request

e. Test Request for Vocoder

f. Response for Vocoder Test Request

g. Request for virtual call test and BTS output adjustment

h. Virtual test and BTS output adjustment result

i. Virtual Call Set up Request and BTS output adjustment Request

j. Virtual Call Set up and BTS output adjustment result

k. BTS output adjustment Request

l. BTS output adjustment result

m. antenna test, remote call test and test terminal operation information output Request

n. antenna test, remote call test result and test terminal operation information

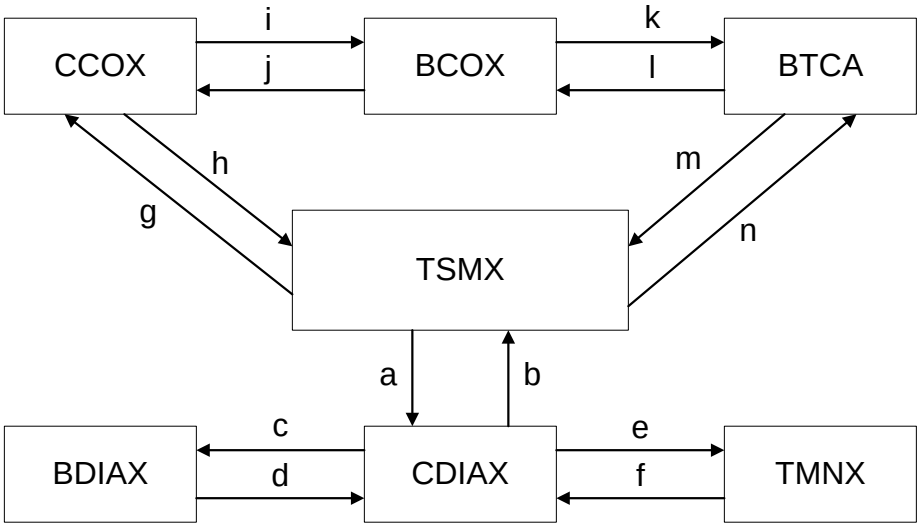

Figure 2.16 TSMX block flowchart

(6) STMX (Status Management eXecution)

1) Block Summary and Working Function

A STMX block displays the things (which result from monitoring state of main processors in BSC system and searching each processor and device state and call resource state of BSC and BTS system, in case of manager's demand) on manager's screen .

The STMX also manages and maintains BTS and BSC system or state of device with interworking with the structure management and the fault management function.

There are some functions in STMX, a monitoring function of BSC main processor

state, a processor and device state search function of BTS and BSC by manager's request, a overload Control function and a call resource state search function of GUI (Graphic User Interface) screen.

The function monitoring Processor state is to monitor action state of these subsystem by polling CCP, ACP, HICA, TSGA processor periodically. The processor and device state search function of BTS and BSC by manager's request has a responsibility for request and output for device state which each subsystem is managing now.

The overload control function is to output overload state of CCP and BCP and change overload critical value of CCP and BCP.

The call resource state search function of GUI screen is ,when manager is on call resource state screen, to reflect it on screen by searching current accurate call resource state periodically.

2) Block Flowchart

The following Fig.2.17 describes STMX block flow chart.

Figure 2.17 STMX Block Flowchart

a Monitoring and Request of ACP Processor State

b Report of ACP Processor State

c Monitoring of CCP Processor State, State Request of processor and devices, Overload Control and Report of State

d Monitoring of CCP Processor State, State Report of processor and devices, Report of Overhead State

e Monitoring and Request of TSGA Processor State , Request of TFDA State

f Report of TSGA Processor State , Report of TFDA State

g Monitoring of GCIN/LCIN Processor State, Request of GCIN/LCIN/BIN Processor and Node State and Request of Active Side Switch

h Report of GCIN/LCIN Processor State, Report of GCIN/LCIN/BIN Processor and Node State, Report of Active Side Switch

i Request of TFSA and GPS Processor State

j Report of TFSA and GPS Processor State

k Request of SACA Processor State

l Report of SACA Processor State

m Request of BTS Processor and device State and Request of Overload Control and State

n Report of BTS Processor and device State and Report of Overload State

(6) DCIX (Data Communication Interface eXecution)

A DCIX block supplies a path for transmitting/receiving a management information between application blocks in BSM and other subsystems in BTS and BSC system, and communicates with other system by HDLC.

Communication with other system is accomplished through RS-422 at the speed of 2.048Mbps. and a data link uses point-to-multipoint method.

The DCI block is generated by BIM block, initializes a necessary data for setting up a data link between other subsystems and must be in a standby state to set up the data link with other subsystem .

Application block in BSM (in case of establishing data link) or DCI block (in case of receiving message from other subsystem) must perform procedure which processes this message.

(7) DBHX (DataBase Handler eXecution)

1) Block Summary and Working Function

A DBHX block establishes, initializes and manages a database which application block in BSM need.

The DBHX block consists of a DBD (DataBase Definition) software unit and a DBM (DataBase Management) software unit.

The DBD function is to generate a database through setting up relation between each entities to remove overlap properties of data which each application block needs.

The DBM supplies a function which ,in case of using a database of a application in BSM, processes the data efficiently and exactly.

2) Block Flowchart

The following Fig.2.18 describes DBHX block flow chart.

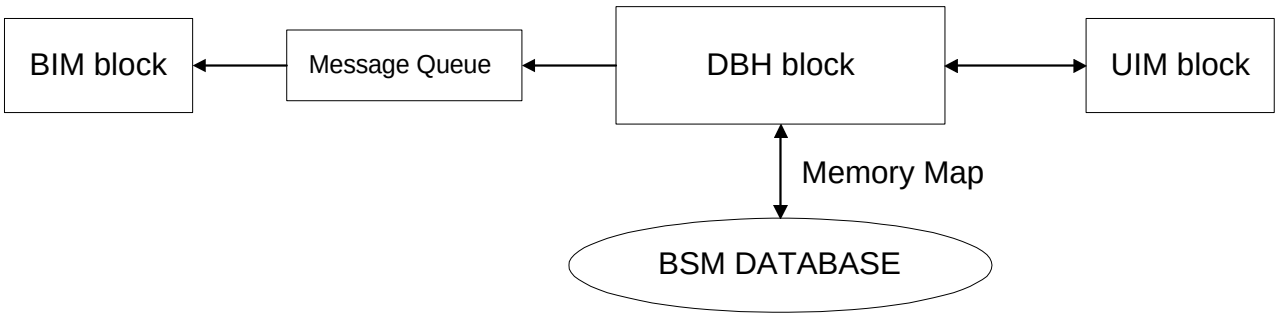

Figure 2.18 DBHX Block Flowchart

(9) UIMX (User Interface Manager eXecution)

1) Block Summary and Working Function

A UIMX block performs all functions related to window such as creation and removal of window and event processing, and supplies a function which outputs a system state and information as to alarm and statistics with simply and logically recognizable graphic type

Also, the UIMX processes events caused from manager and displays a information supplied from each application block on manager's terminal screen with text or graphic. Also, the UIMX block supplies a command input type about GUI (graphic user interface) such as menu and dialogue box .

After formatting a voluntary message received from system (i.e. fault and alarm message, state, statistics report and test result) , the UIMX block displays that on the system display window.

2) Block flowchart

The following Fig.2.19 describes UIMX block flowchart.

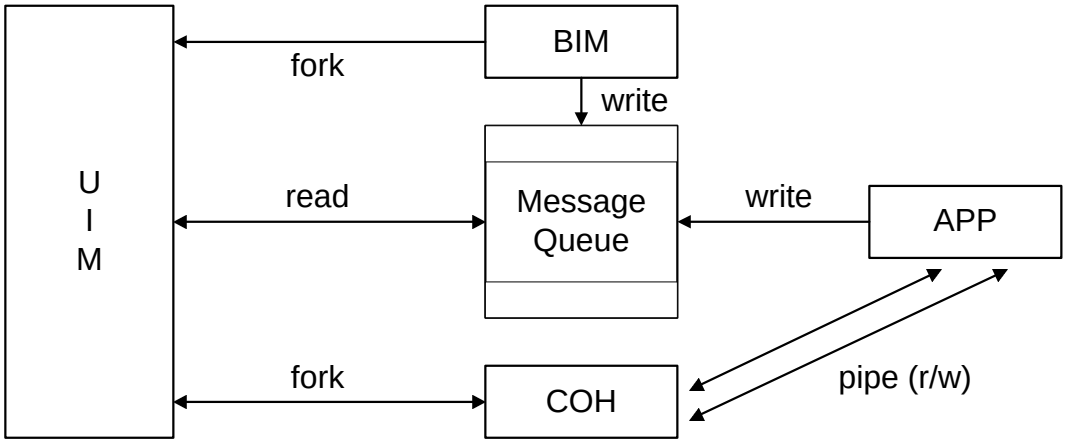

Figure 2.19 UIMX Block Flowchart

(10) COHX (COmmand Handling eXecution)

1) Block Summary and Working Function

A COHX block performs a syntax and meaning analysis function of input command and a execution control function. The Syntax analysis checks the accuracy of the grammar of a inputted command and the Meaning analysis checks the meaning of command and the range of parameter.

If format error occurs on analysis procedure, Command Analysis block supplies the location of error, the kind of error and the information for error correction.

On the other hand, if analysis result of command prove to be out of error, the command drives application function to perform the command, receives execution result from application function and displays it on display window by transmitting it into UIM block.

2) Block Flowchart

The following Fig.2.20 describes COHX block flowchart.

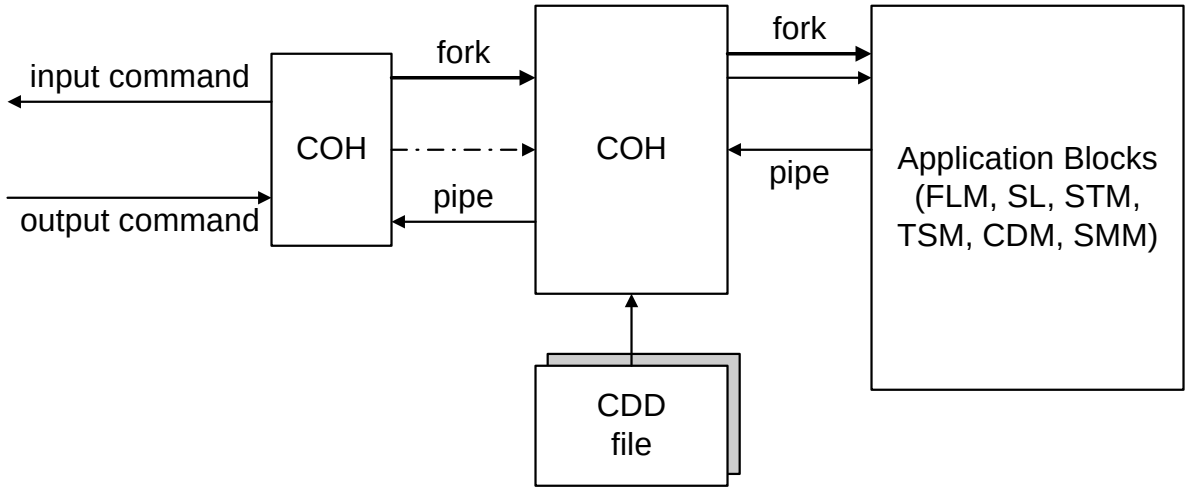

Figure 2.20 COHX Block Flowchart

(11) BIMX (BSM Initialization and Maintenance eXecution)

1) Block Summary and Working Function

A BIMX block is first initiated at the BSM software. Also, the BIMX block is initiated in case of booting of BSM system or by manager. In case of initialization of BSM, BIM initializes all necessary internal data of BSM, executes a permanent process block and initializes a necessary IPC function for data communication between blocks in BSM.

If all block is run, BIM monitors the action state of permanent process. while, If the action of these process is stopped abnormally, BIM takes an appropriate recovery procedure and reports this fact to manager.

2) Block Flowchart

The following Fig.2.21 describes BIMX block flowchart.

a. SCM drive and state management by BIM

b. DCI drive and state management by BIM

c. BSM application- part drive and state management by BIM

d. UIM drive and state management by BIM

e. LJH drive and state management by BIM

f. UIM drive and state management by BIM

g. UMH drive and state management by BIM

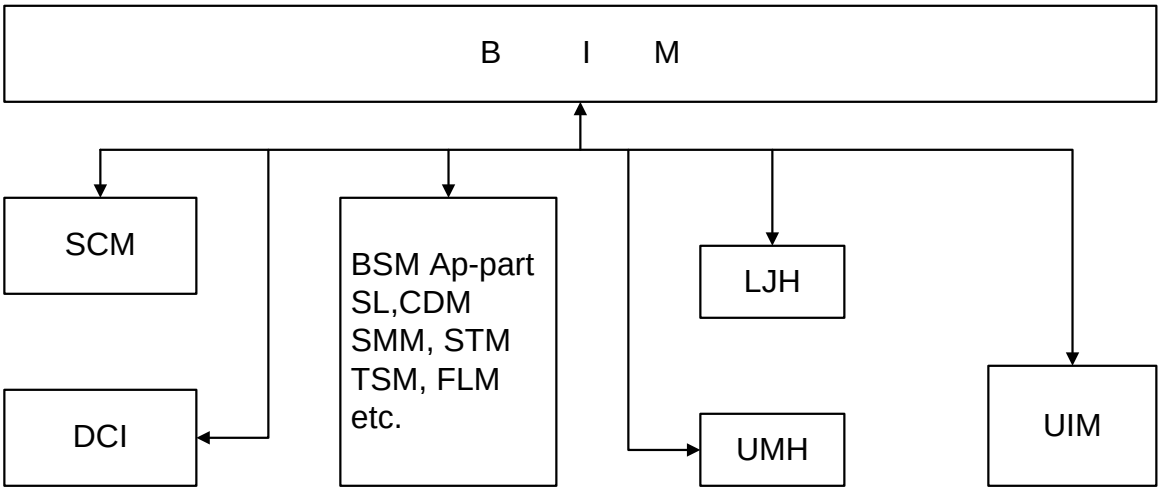

Figure 2.21 BIMX Block Flowchart

(12) UMHX (Unsolicited Message Handler eXecution)

1) Block Summary and Working Function

In case of receiving a initial message from BTS or BSC system, a UMHX block generates a corresponding application block for processing the message and let it perform the requested application function.

After adding a corresponding permanent process ID to the received message, the UMHX makes the corresponding process the message by transmitting it into a message Queue. The UIM block is driven as a permanent processor by BIM block. After reporting current state to BIM block, if UIM receives processors of STM, SMM, TSM, FLM and SL block from BIM block, before receiving a system output message corresponding to STM, SMM, TSM, FLM and SL block, after UMH block prepares for receiving the system output message of other subsystem, when a corresponding message is delivered, the UMH block analyzes Signal_id and performs a function which generates a corresponding block in BSM.

2) Block Flowchart

The following Fig.2.22 describes UMHX block flowchart.

a. BIM reports UMH drive and drive state to the BIM

b. receipt of unidentified initial message

c. Temporary processor generation and message transmission and management

d. permanent processor id management and corresponding message transmission

e. transmit UMH state information into the UIM

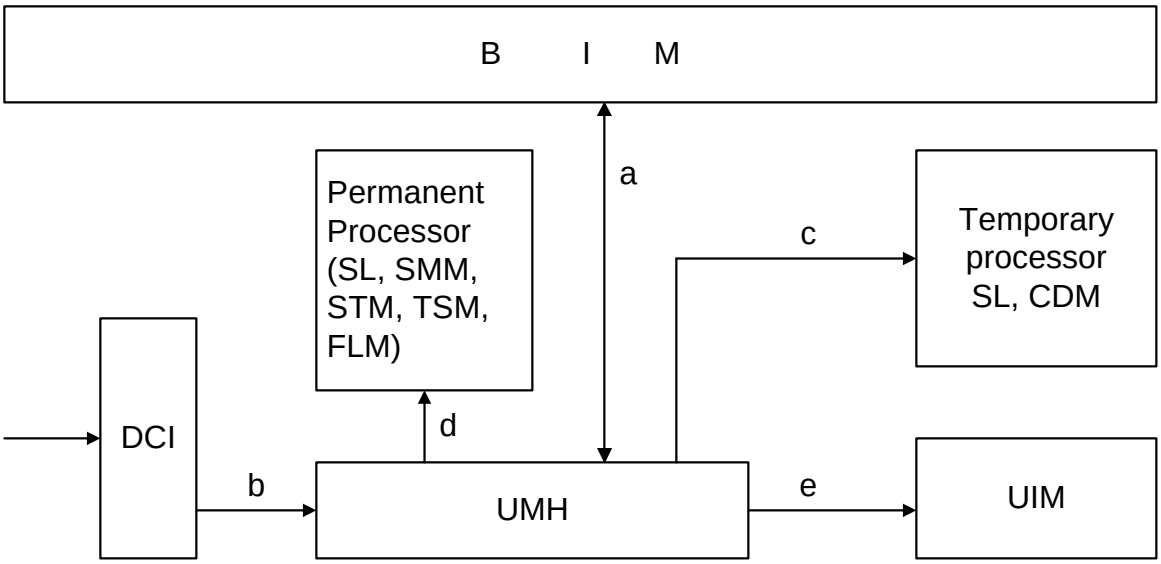

Figure 2.22 UMHX Block Flowchart

(13) LJHX (Long-term Job Handler eXecution)

1) Block Summary and Working Function

A LJHX block performs a application function by generating a application block which requires a long time requested by manager and manages the state of this.

The LJH block is driven as a permanent processor by BIM block. And after reporting current state to BIM block, the LJH block prepares for generating a processor which requires the long time requested by manager.

If the LJHX block receives a processor performed for long time by manager's request, the LJHX performs a function which generates a corresponding block in BSM by analyzing the corresponding command

2) Block Flowchart

The following Fig.2.23 describes LJHX block flowchart.

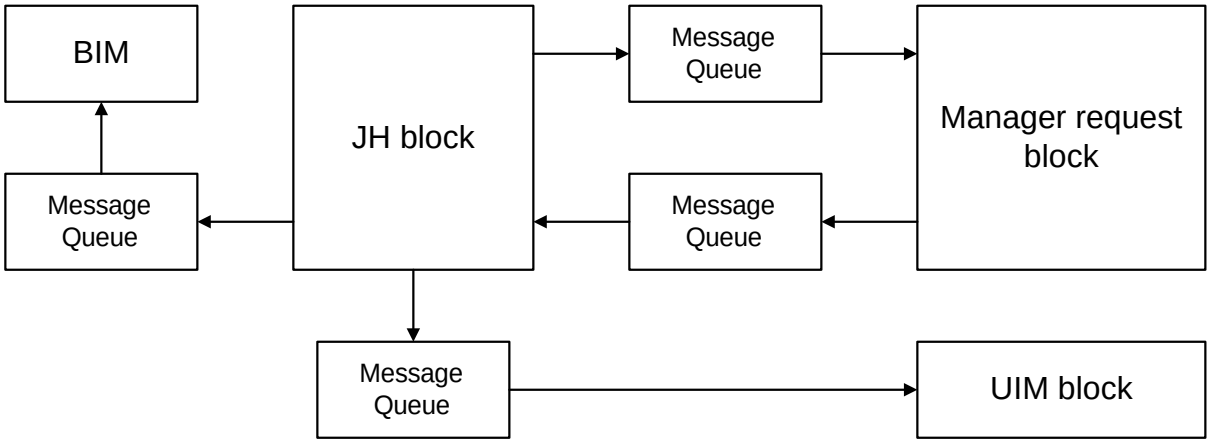

Figure 2.23 LJHX Block Flowchart

(14) SCMX (System Clock Manager eXecution)

1) Block Summary and Working Function

A SCMX block receives periodically TOD (Time Of Day) from GPS, sets up BSM time and reports that to application block which requires TOD. The SCM block is driven as a permanent processor by BIM block .

After reporting current state to BIM block, the SCM block prepares for receiving TOD

Clock from GPS every two seconds. In case that the receiving Clock is out of error, the SCM block compares it with current BSM System Clock.

If range of error is within 3 second, the SCM block don't reset the BSM System Clock, and If range of error is over 3 second, the SCM block resets the BSM System Clock.

2) Block Flowchart

The following Fig.2.24 describes SCMX block flowchart.

a. BIM control SCM drive and drive state

b. receive TOD Clock from GPS

c. transmit SCM state information into the FLMX

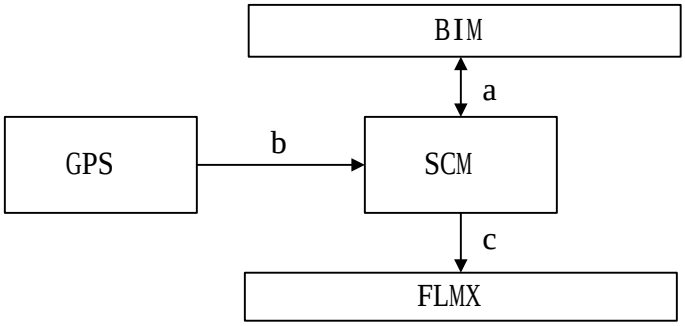

Figure 2.24 SCMX Block Flowchart

2.3.2.5 BSM Software Structure

The following Fig.2.25 describes BSM system s/w block structure

Figure 2.25 BSM System S/W Block Structure

Chapter 3 BSM Operation & Administration

3.1 BSM Operation

3.1.1 Overview

This chapter describes the operations and functions of BSM (Base Station Manager) which takes a part of system operation, administration, and maintenance of the subsystems of BSC (Base Station Controller) in the mobile communication systems.
BSM provides GUI (Graphic User Interface) for OAM (Operation, Administration, and Maintenance) which is status monitoring, performance measurement, statistics processing, configuration management, alarm handling and so on. So, operators can use and understand easily.
Figure 3.1 represents the initial display window of BSM when you start the BSM system up in the workstation with the command, "bimx" without logging in it.

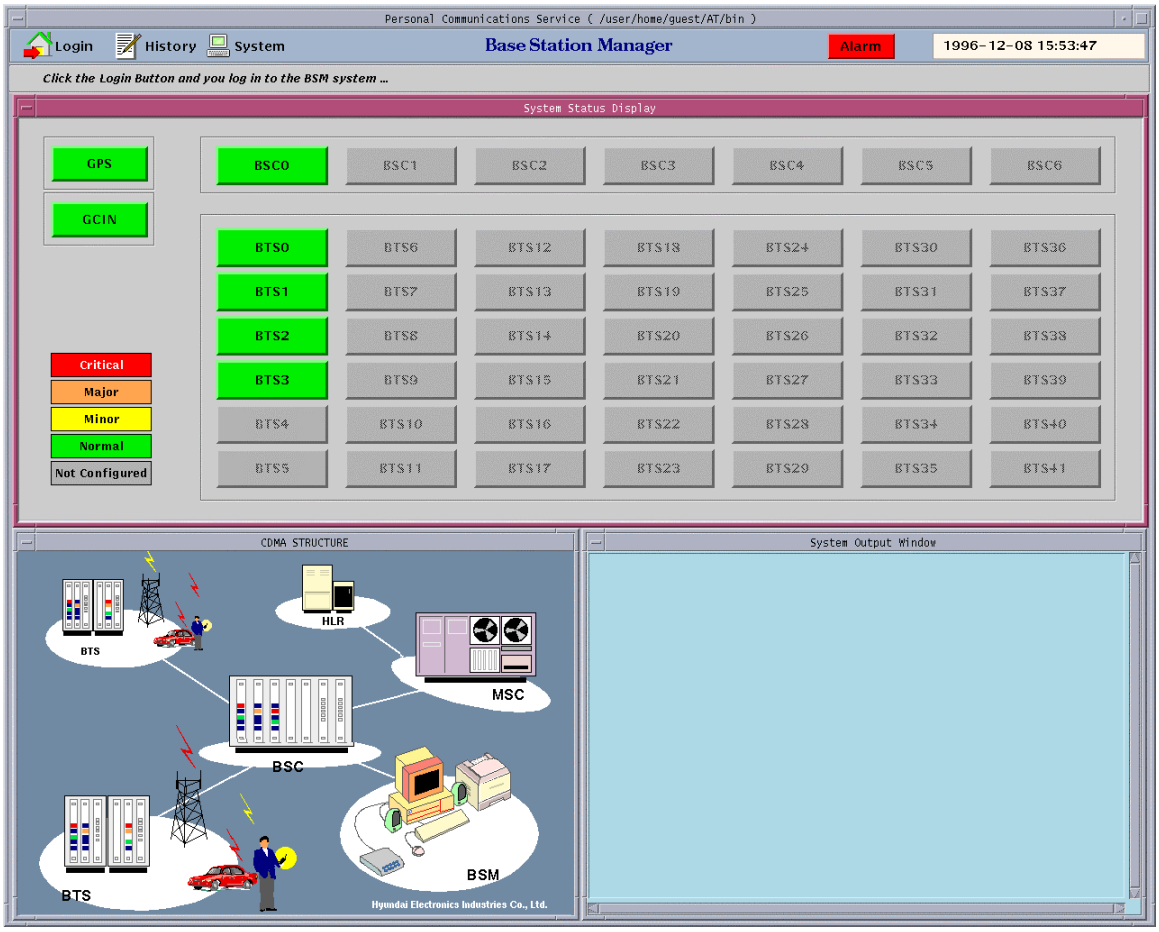

Figure 3.1 BSM Initial Display

3.1.2 Main Display Structure

When you log in BSM with the specific user ID and password, the window such as Figure 3.2 is displayed.

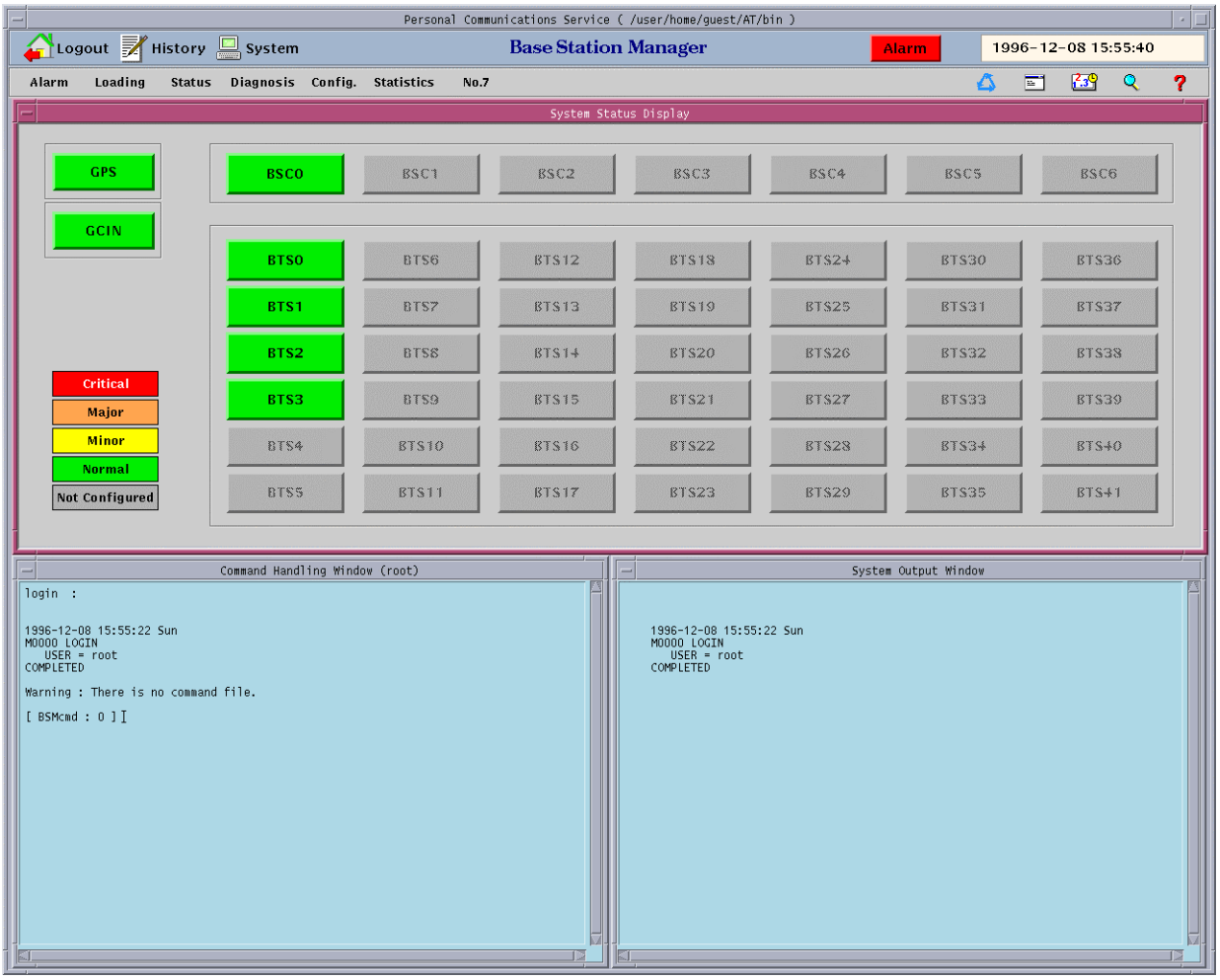

Figure 3.2 BSM Main Display

3.1.3 Main Button

3.1.3.1 Operation by "Login" Button

You can use the command for the CDMA System and service for the User by using login. Figure 3.3 represents the login dialog box in BSM.

(1) Login Procedure

1) If you choose the "Login" Button in the main display window, "Login Dialog" window is displayed.
2) You input the Login name and Password in the "Login Dialog" window and then press the "OK" Button.
3) When the wrong spell is inputted or the login name or password is mistyped, the login name or password, you can modify it using "Back space" key or "DEL" key.

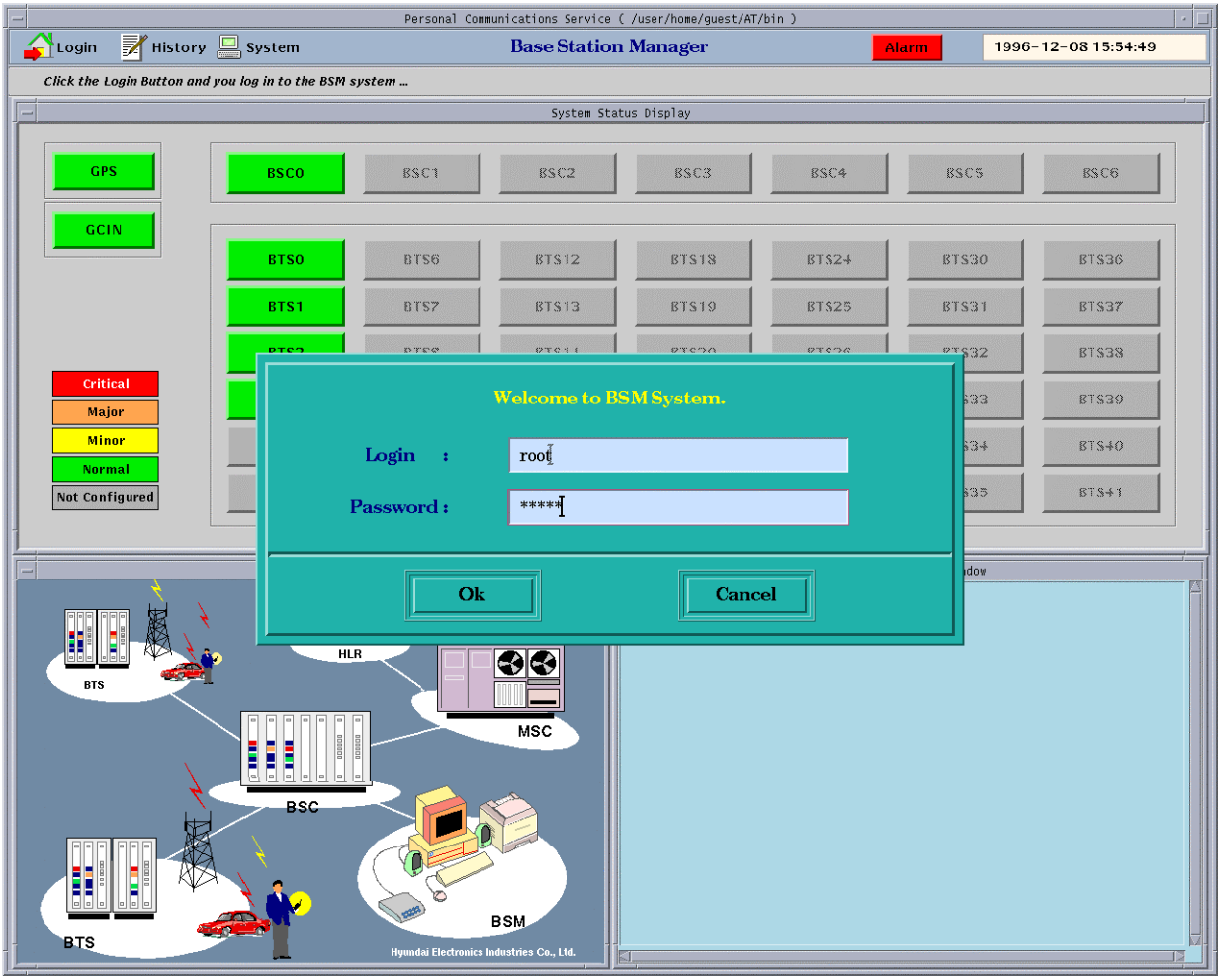

Figure 3.3 BSM Login Window

3.1.3.2 Operation by "History" Button

(1) If you choose the "History" button such as Figure 3.4 in the BSM Tile window, "History Tool" window is displayed like Figure 3.5.

Figure 3.4 HISTORY Button

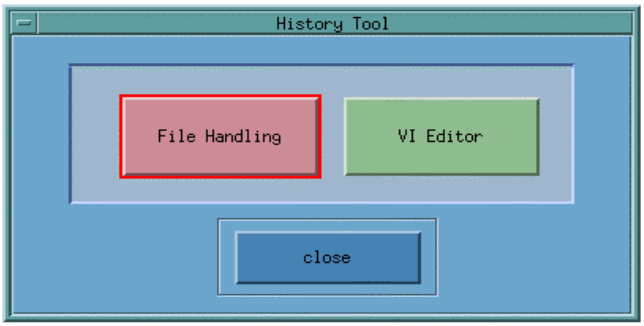

Figure 3.5 History Tool

(2) In the "History Tool" window, "File Handling" item functions "Display", "Print", and "Delete" of the history file. The user of being good at UNIX system uses "VI Editor" item to do them. First, if you press the "File Handling" button, "File Selection Dialog" window such as Figure 3.6 displays.

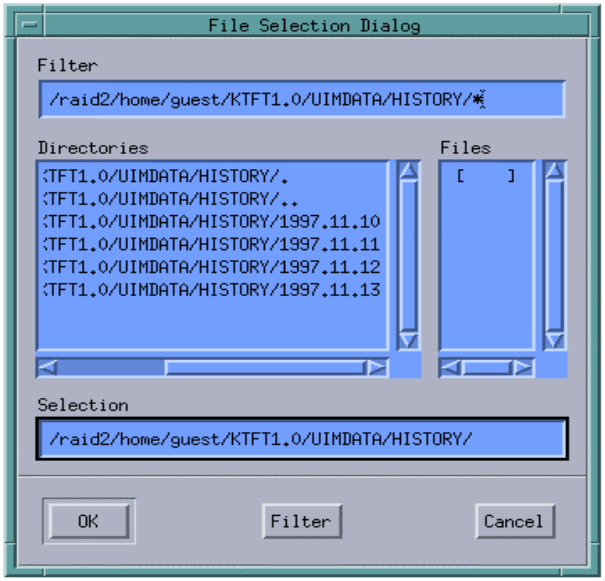

Figure 3.6 File Selection Dialog

(3) If you choose a certain date of date list in the "Directories" field of "File Selection Dialog" window and then press the "Filter" button, "CHD" and "MHD" directories display in the "Directories" field (Because both directories are operated in the same manner, here deals with only the "CHD" directory).

(4) If you choose "CHD" directory and then press "Filter" button, a lot of files display in the "Files" field, which is stored to command list by the elapsed time.

(5) If you choose a file of the list in the "Files" field of "File Selection Dialog" and press "OK" button, the following window such as Figure 3.7 is represented. This list is sorted to time.

Note – You can also use this shortcut: double-click the file name in the dialog box.

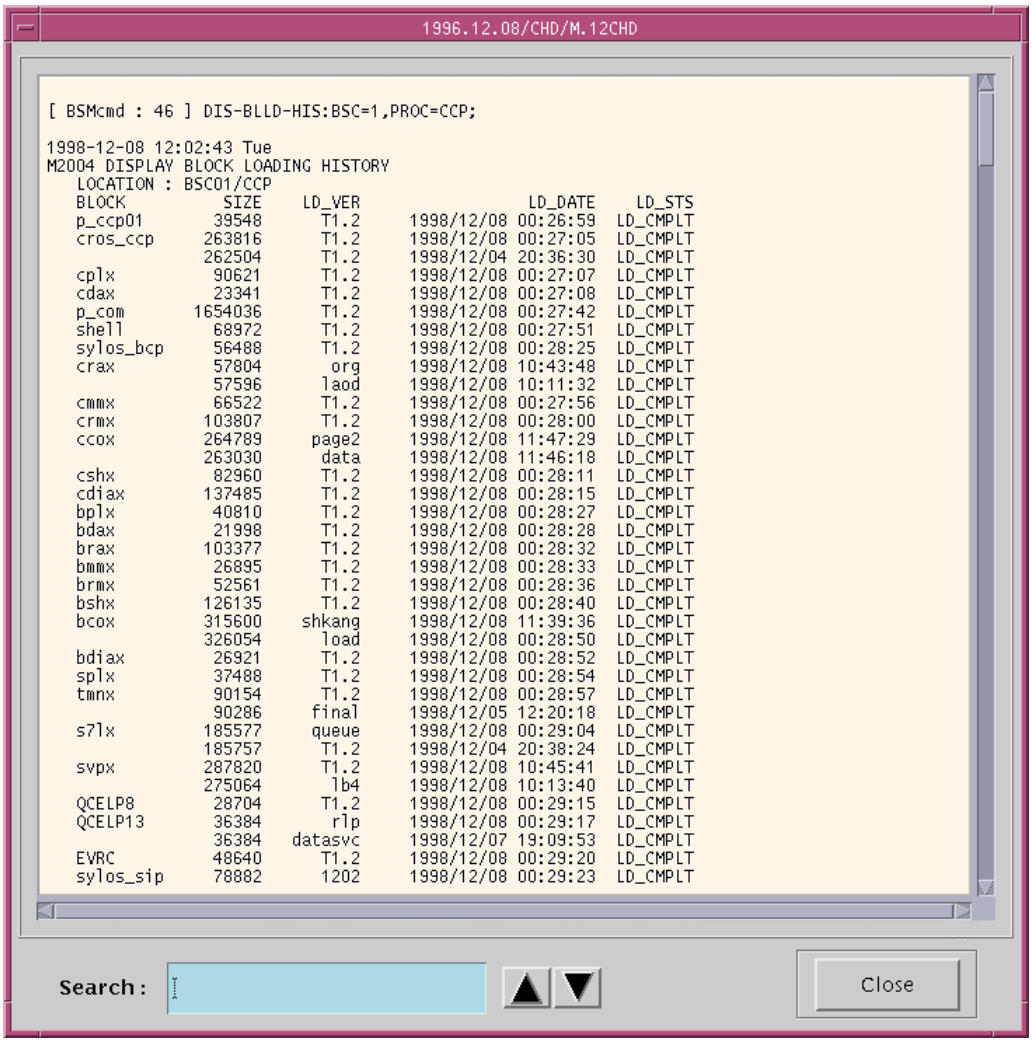

Figure 3.7 Result of "File Handling"

(6) Figure 3.7 shows the function of searching words. If you enter the word that you want to search in the "Search : " Text Field and push the Arrow Button () (or enter the RETURN Key). Then the screen moves the location of the word to the first location you want to search. It is possible to use the Down Arrow button or Return Key if you want another locations of the word, The Up Arrow Button is used for searching the word to upper field.

(7) If you choose the "Close" button, the window such as Figure 3.7 is closed.

(8) If you choose "VI editor" button in the History Tool of Figure 3.5, "File Selection Dialog" window such as Figure 3.6 displays and you can select the specific file in

order to open it. After the procedures such as (3), (4), and (5) are processed, vi editor window is created.

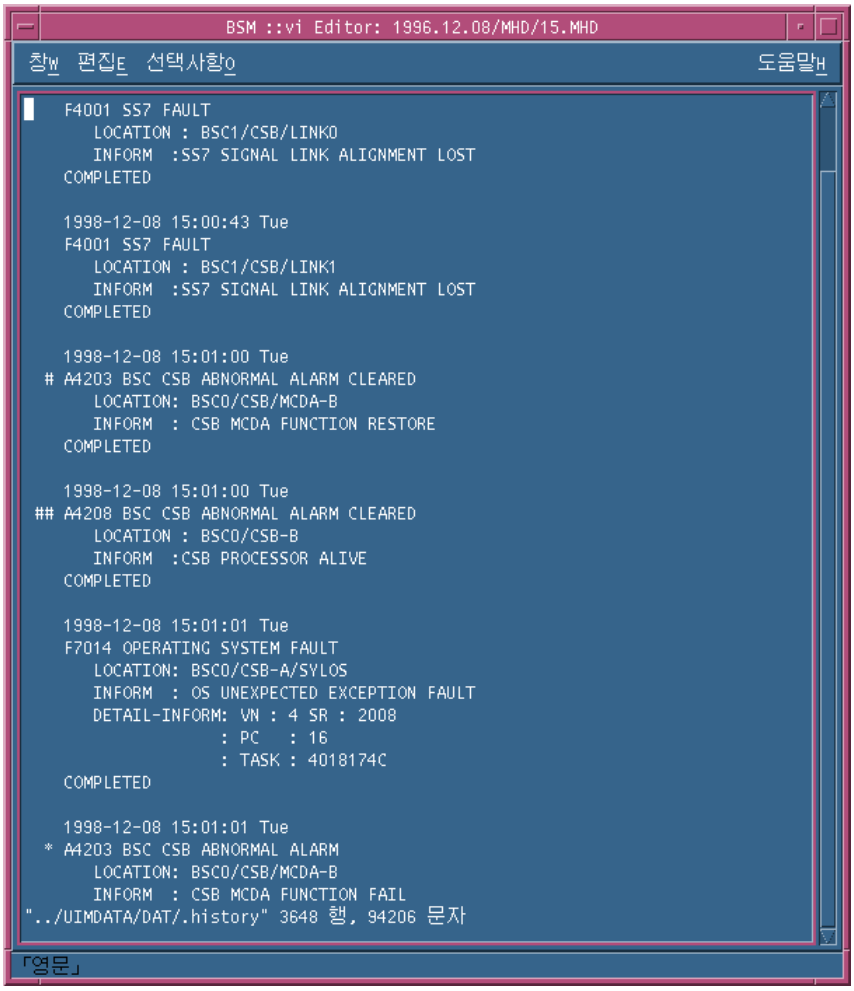

Figure 3.8 Result of "Vi Editor"

- VI Basic Commands

In the descriptions, CR stands for carriage return and ESC stands for the escape key.

:q!CR quit

/textCR search for text

(ex) /M5015 DISPLAY <enter>

^U ^D scroll up or down

^L clear and redraw window

3.1.3.3 Operation by System Button

Pressing this button presented to Figure 3.9 enables the operator to control user related information, command structures, peripheral devices of BSM. When you log in to the BSM, you are limited the control authorization according to user's level or grade.

Figure 3.9 System Button

To Start BSM System Manager :

- Click the System button in the BSM main window and User Information Dialog of Fig.3.10 is displayed.

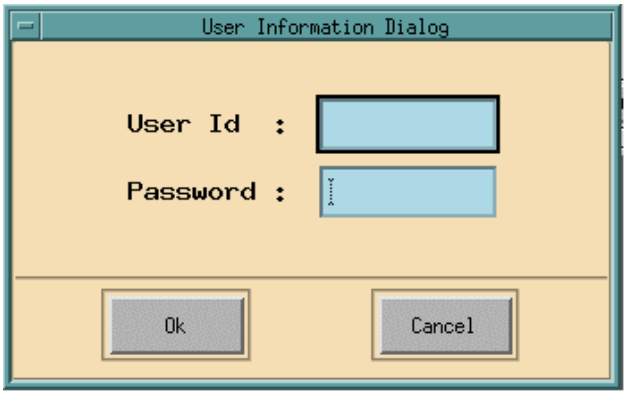

Figure 3.10 User Information Dialog

- Type the User ID and the Password in the corresponding field and then press "OK" button

3.1.3.3.1 Operations by Super-user (root)

If you type "root" and its password in the User Information Dialog of Fig. 3.10 , the window such as Figure 3.11 is displayed.

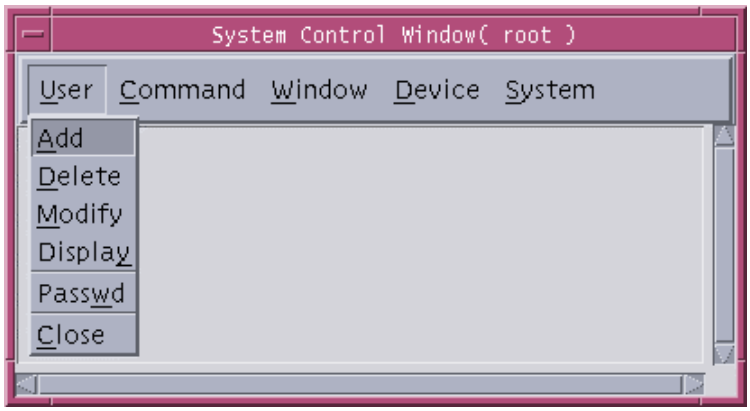

Figure 3.11 System Control Window

3.1.3.3.2 User Menu

The only super-user can manage all grades of registered users. That is, the super-user can add, register, modify, and delete user.

- ADD submenu : Super-user uses this menu to register a new user. The default grade of user created newly is level 2. Figure 3.12 presents the input window in order to create or add a new user in BSM.
- Delete submenu : This menu is used to delete the registered user. If you input a specific user ID to the window such as Figure 3.13, you can delete it.
- Modify submenu : This menu is used to change the contents of the registered user. If you select "Modify" menu, the input window is displayed and you can modify the user ID in this window. If you input the modifying user Id and click "OK" button, the output window is represented. This output window indicates the information of "User ID", "Password", "Class" and "Name". You can edit each fields and you can modify the user information by pressing "OK" button. The window of modifying the user information is presented in Figure 3.14. Figure 3.14 represents the example of changing the user grade of authorization for the command. That is, this figure presents changing the authorization level of "test" user.

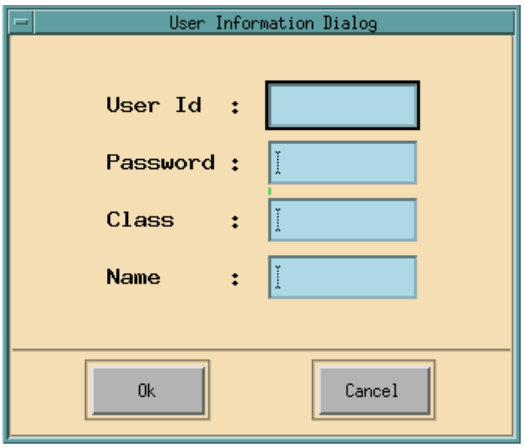

Figure 3.12 User Add

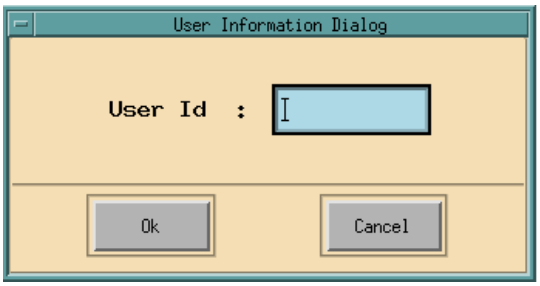

Figure 3.13 User Delete

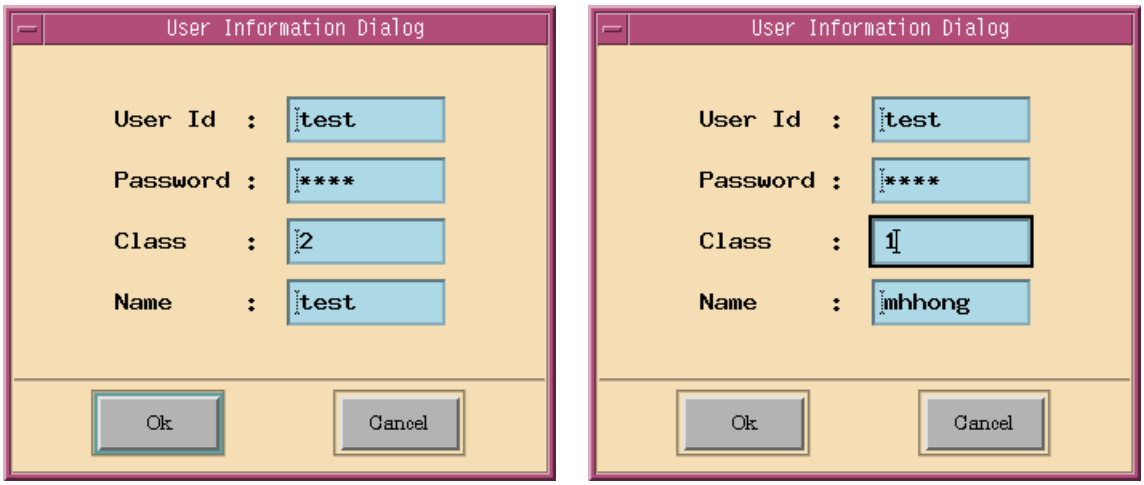

Figure 3.14 Modify a user

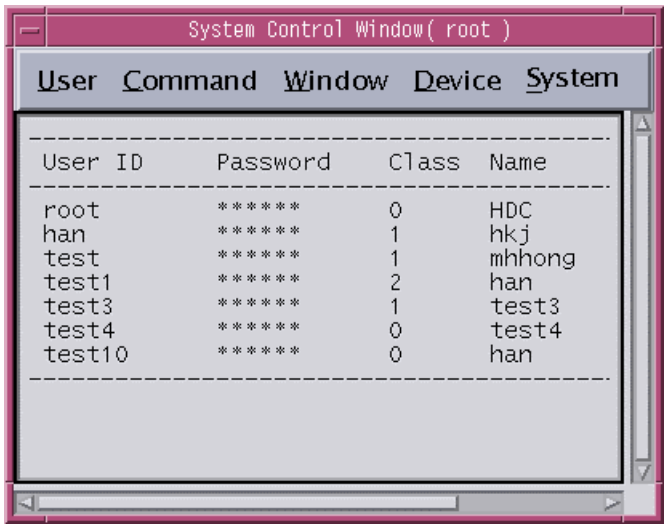

Figure 3.15 List up the user information

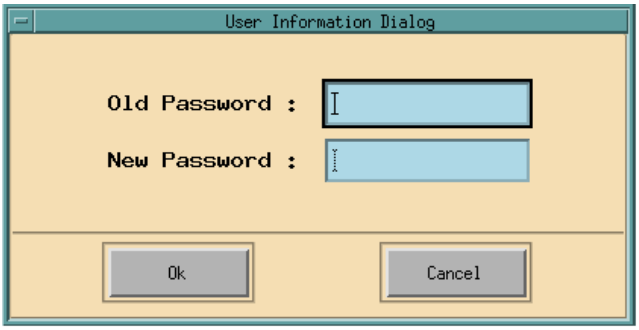

Figure 3.16 Change user's password

- Display submenu : This button is used to output or display all the registered users. Figure 3.15 presents the output window of the user information.
- Passwd submenu : This is used to modify the password of current log-on user in BSM. In other words, this menu modifies root's password. Figure 3.16 presents the window, which changes the password of specific user.
- Close submenu : Termination of system function

3.1.3.3.3 Operations by Command menu

This menu is used to create or edit a CDD(Command Data Description) file and check the contents of CDD file that currently registered in the system.

- File submenu : This menu is used to manipulate the CDD file. It consists of these submenus: New, Open, Save, SaveAs, Print, Delete, and Quit

- Check submenu :This menu is used to check all the CDD file and then displays its result in the corresponding window.

3.1.3.3.4 Operations by Window menu

This menu is used to arrange several windows.

- Tiling submenu : It arranges and adjusts the unsettled windows.

3.1.3.3.5 “Device” menu

This menu is used to control the peripheral devices connected to the BSM workstation.

There are three submenus in this menu as follows:

- Printer submenu : This menu is set to the kind of printer, and decides the setting of the printer mode, On/Off.
- Speaker submenu : This menu is set to audio device mode, On/Off.
- Modem submenu : Not implemented

3.1.4 Command Buttons

BSM system provides dozens of commands for CDMA system. These buttons are presented in Figure 3.17.

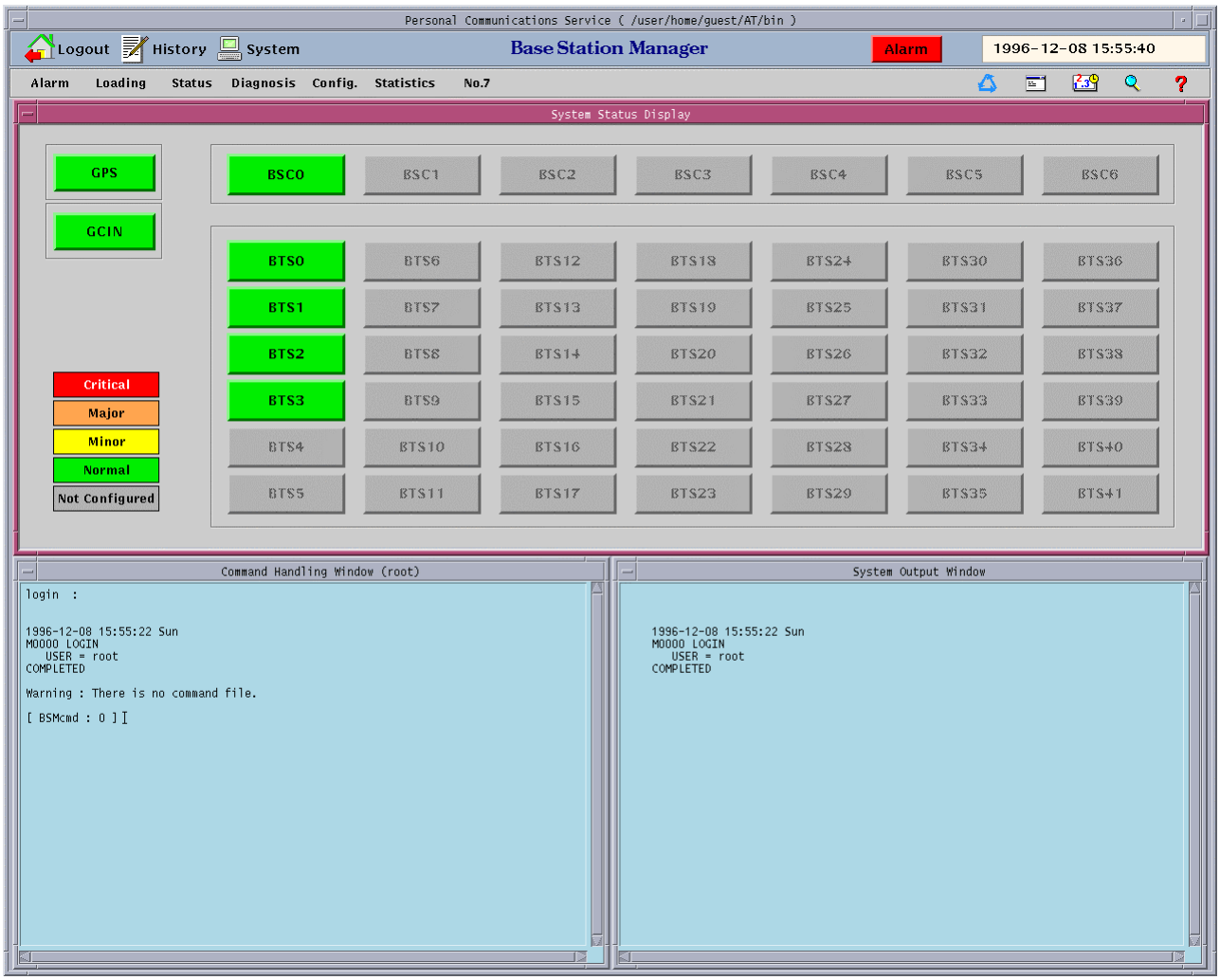

Figure 3.17 BSM Main Screen

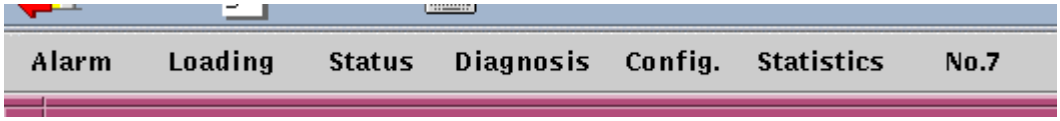

Figure 3.18 Command Panel

3.1.4.1 Operation of Alarm Command

(1) If you select "Alarm" button in the Command Panel of Figure 3.18, "Alarm Command Dialog" window is represented. In this window, if you select the command button to process, BSM displays the window that you are able to input parameters for the corresponding command.

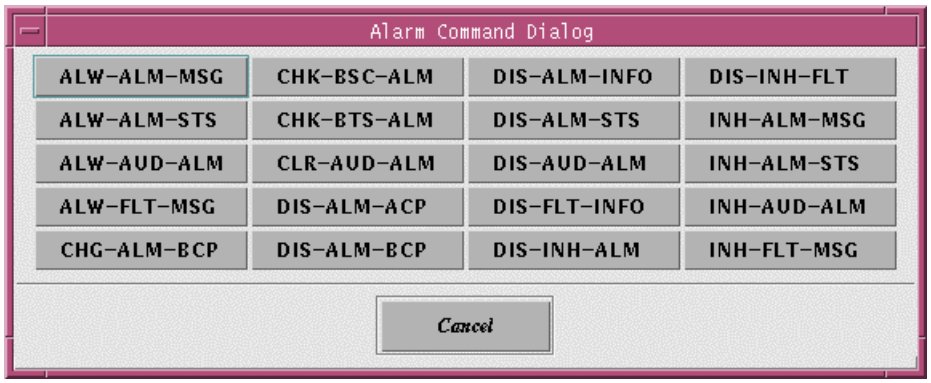

Figure 3.19 Alarm Command Dialog

(2) If the window displays, which operators can input the related parameters to the system for the corresponding command in Figure 3.19, you may enter the values of parameters and then press "Run" button.

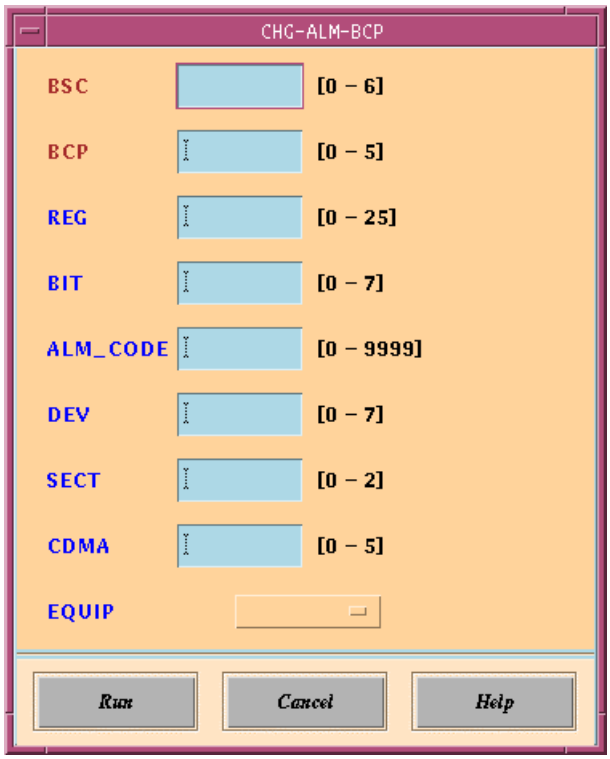

Figure 3.20 Parameter Input Window : Example of CHG-ALM-BCP

(3) In the command window, the corresponding message for the parsed command is

represented and BSM executes it.

(4) If you need to help for the corresponding command, you can click "Help" button and refer to help message.

3.1.4.2 Operations by Loading Command

If you select "Loading" button in the Command Panel of Figure 3.18, "Loading Command Dialog" window is represented.
Its function is same to that of the "Alarm" command.

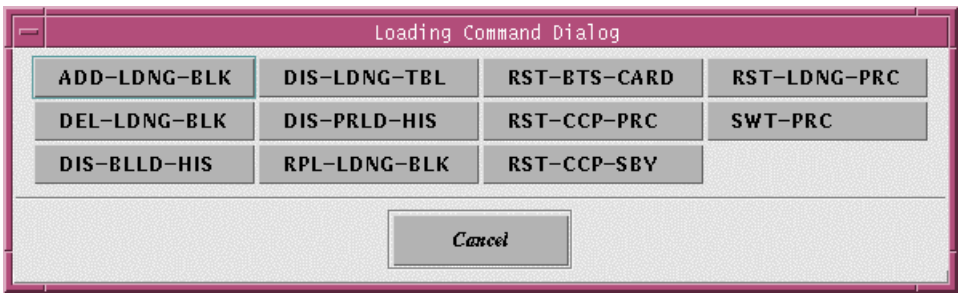

Figure 3.21 Loading Command Dialog

3.1.4.3 Operation by Status Command

If you select "Status" button in the Command Panel of Figure 3.18, the Status Command Dialog window is represented as follows.
Its function is same to that of the "Alarm" command.

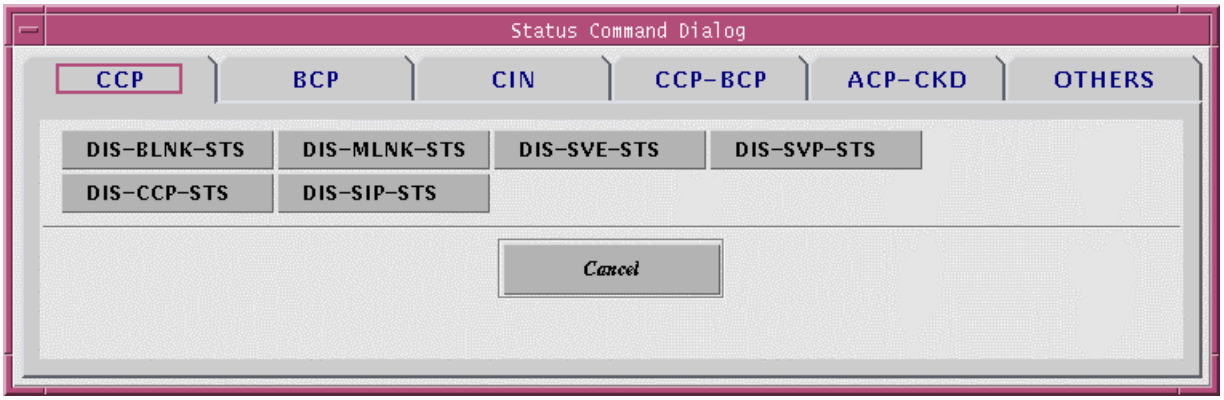

Figure 3.22 Status Command Dialog - CCP

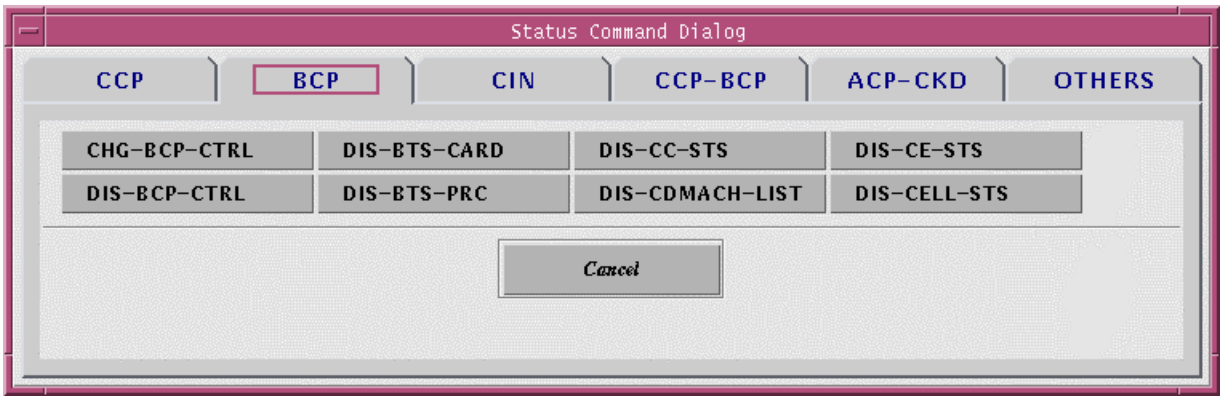

Figure 3.23 Status Command Dialog - BCP

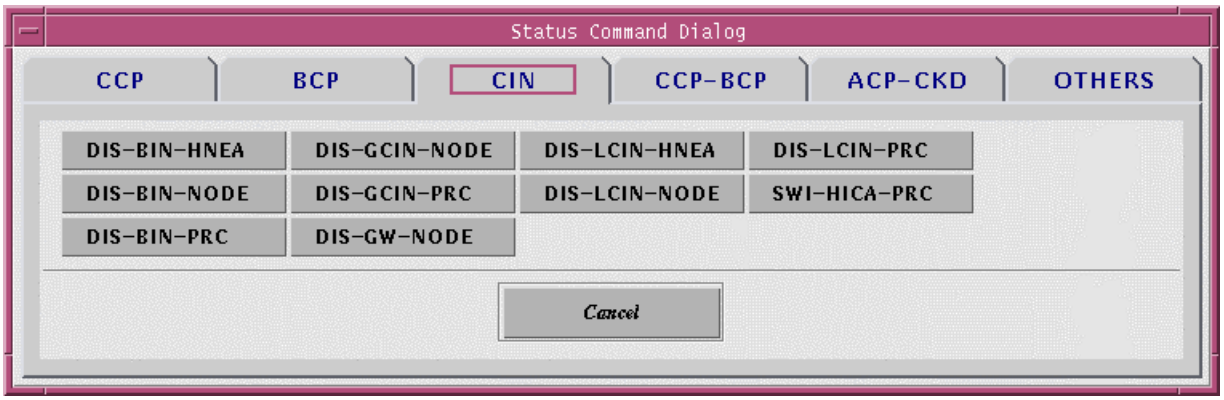

Figure 3.24 Status Command Dialog – CIN

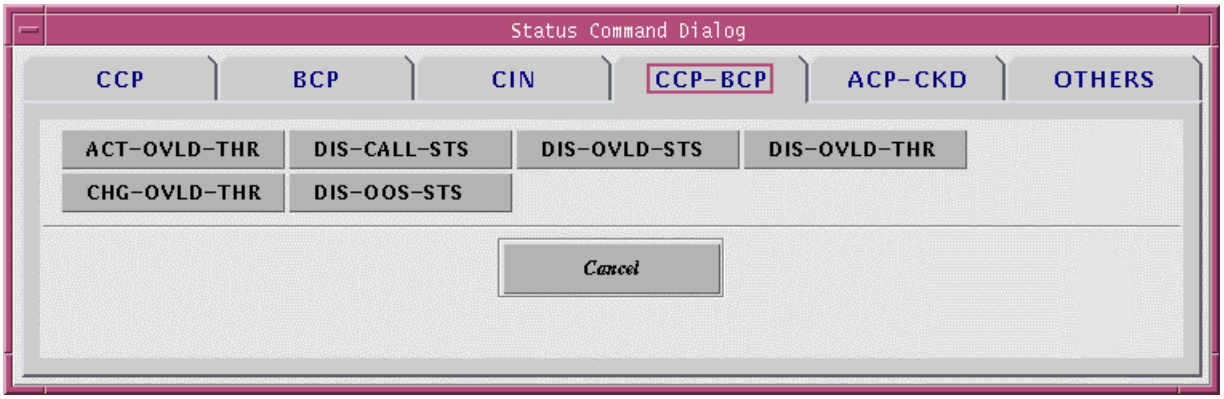

Figure 3.25 Status Command Dialog – CCP-BCP

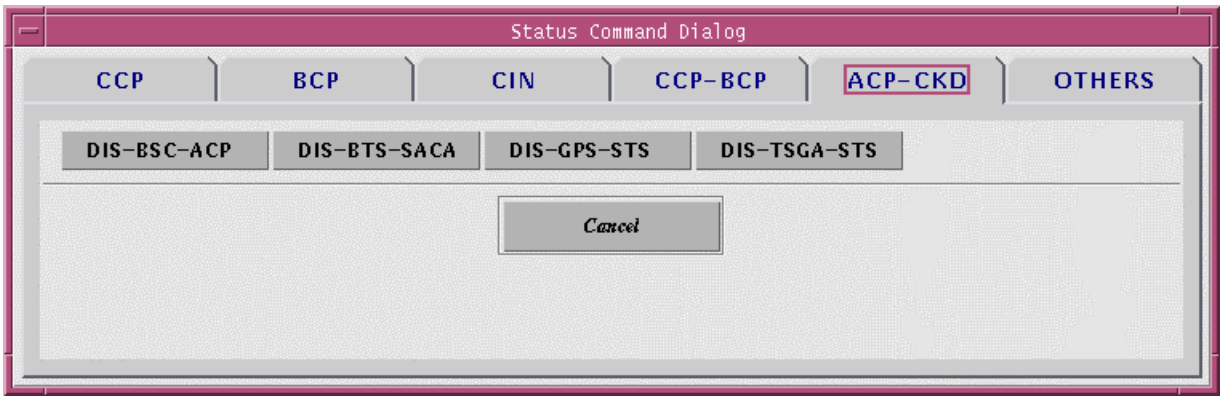

Figure 3.26 Status Command Dialog – ACP-CKD

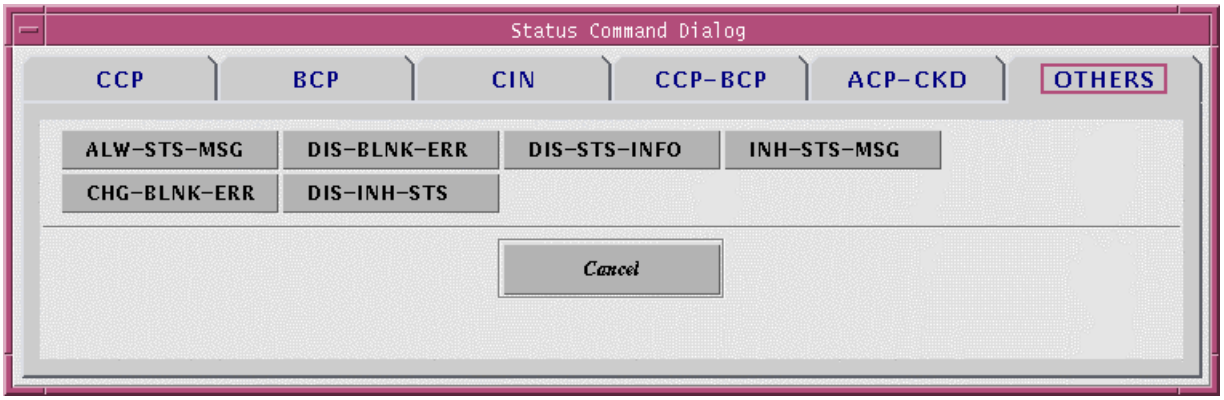

Figure 3.27 Status Command Dialog – OTHERS

3.1.4.4 Operations to Diagnosis Command

If you select "Diagnosis" button in the Command Panel of Figure 3.18, the Diagnosis Command Dialog displays as follows.

Its function is same to that of the "Alarm" command.

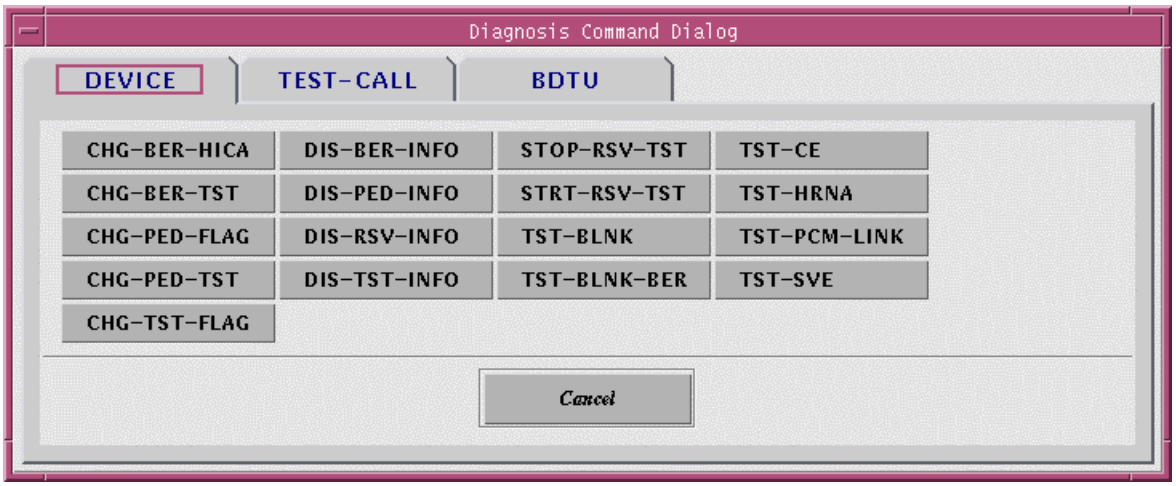

Figure 3.28 Diagnosis Command Dialog

3.1.4.5 Operations by Configuration Command

If you select "Config" button in the Command Panel of Figure 3.18, the Configuration Command Dialog is represented as follows.

Its function is same to that of the "Alarm" command.

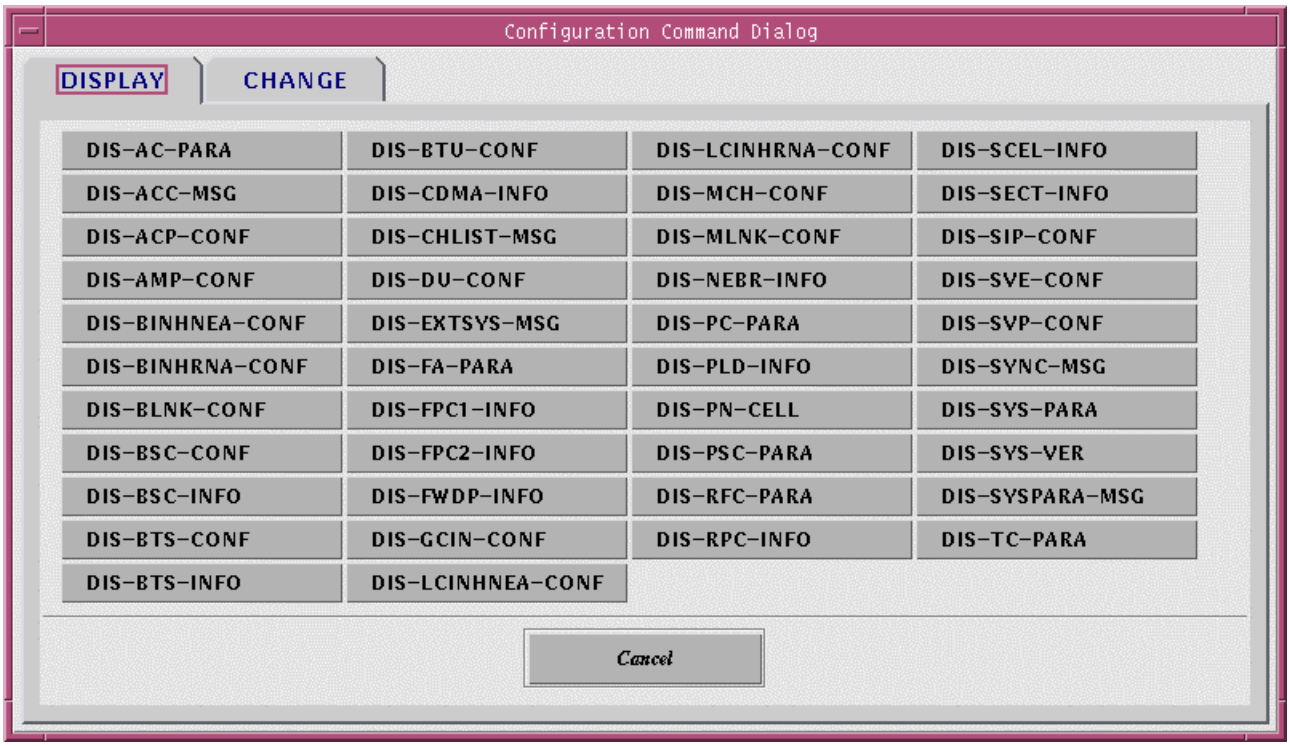

Figure 3.29 Configuration Command Dialog

3.1.4.6 Operations by Statistics Command

If you select "Statistics" button in the Command Panel of Figure 3.18, the Statistics Command Dialog is represented as follows.
Its function is same to that of the "Alarm" command.

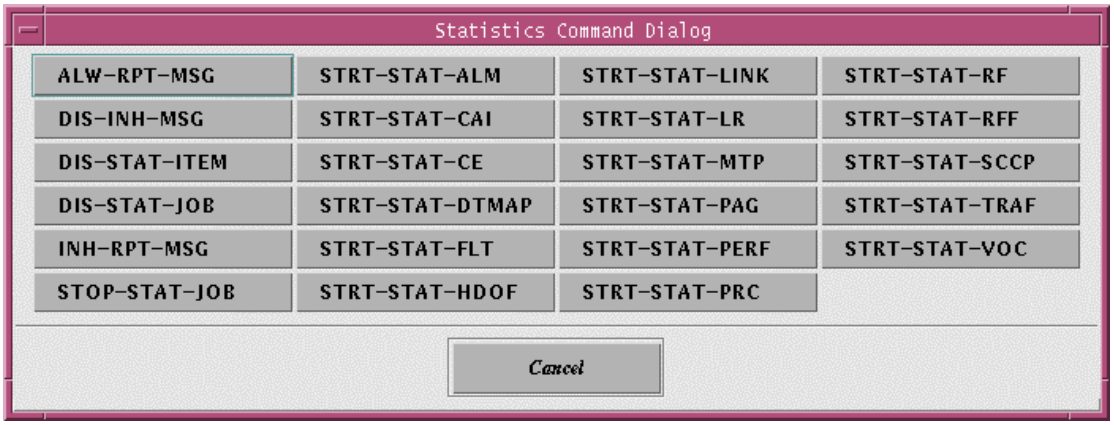

Figure 3.30 Statistics Command Dialog

3.1.4.7 Operations by No.7 Command

If you select "No.7" button in the Command Panel of Figure 3.18, the No.7 Command Dialog is represented as follows.
Its function is same to that of the "Alarm" command.

Figure 3.31 No.7 Command Dialog

3.1.5 Service Button

There are five service buttons in the Service Panel of Figure 3.32. These buttons help to the operators managing the systems efficiently or easily.

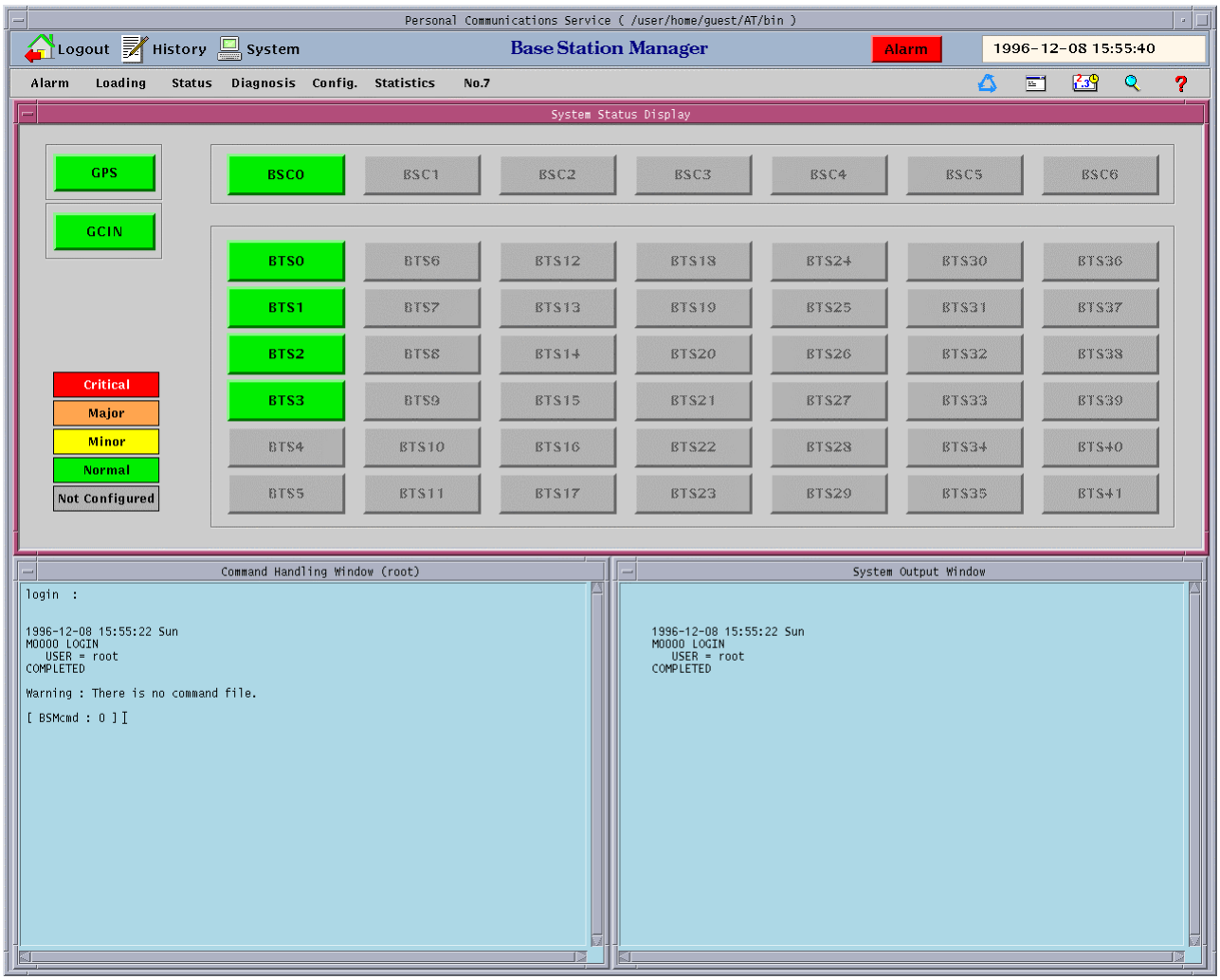

Figure 3.32 BSM Main Screen

3.1.5.1 Change the user grade of command

The function of this button in the Service Panel of Figure 3.33 is to output the command list by user grade or authorization and change the grade or authorization of the specific command. This function is used by the only super-user(root). There are three authorization grades: Super-user, First class user who is able to verify and change the parameters of

system, and Second class user who is able to use basic function and confirm the status of system. Command list is arranged by alphabet order.

Figure 3.33 Service Panel – Change Command Class

- Pressing the button in the Service Panel of Figure 3.33 displays the screen to change the command class.

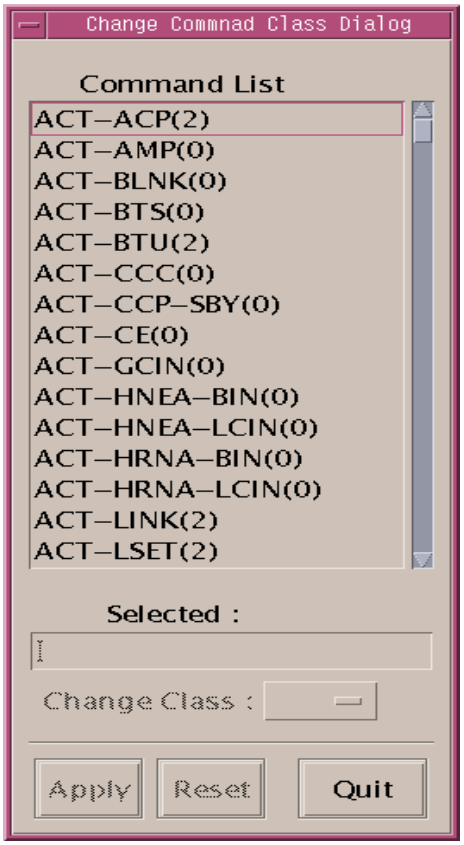

Figure 3.34. Change Command Class Window

- In the command list of the Change Command Class Window of Fig. 3.34, all the commands are listed in alphabetical order and the number in the parentheses means the class. **Double click** an item to change the class.

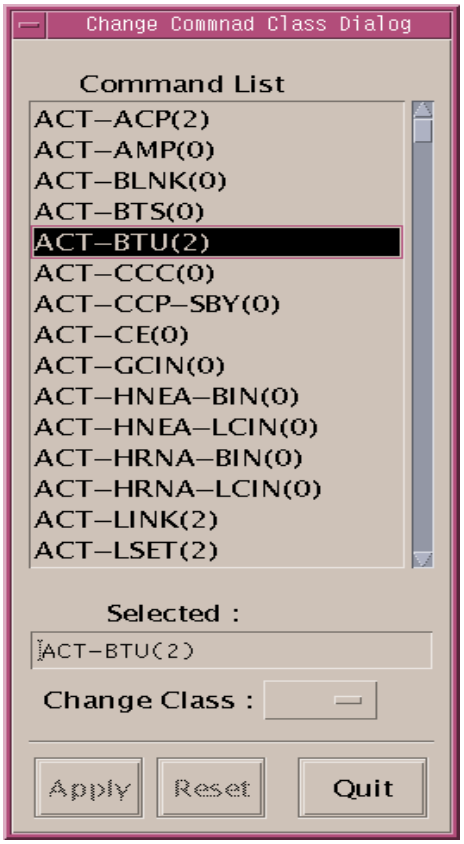

Figure 3.35 Double Click Command to Change Class

- Clicking the pop-down button of the Change Command Class Window shows as follows. Click one of these classes and press Apply button, then the changed class is applied to the command list.

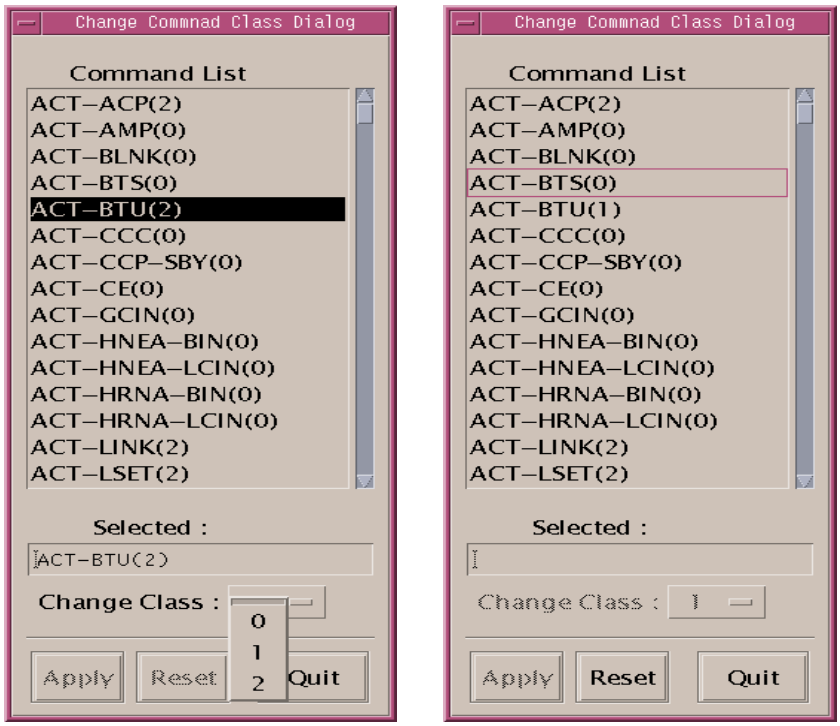

Figure 3.36. Change the Class of ACT-BDTU to Class 1

- If you want to turn it back to the original class, press Reset button.
- Pressing Quit button ends the function.

3.1.5.2 Batch

This service button in Figure 3.37 is able to write, edit, and execute the batch file. This file is composed of a series of BSM commands.

Figure 3.37 Service Panel - Batch

- If you press "Batch" button in the Service Panel, BSM displays such as Figure 3.38.
- The File menu in the Batch File Editor of Figure 3.38 has several commands as below:
  a) New - New batch file.

b) Open - Open and read an existing batch file.

c) Save - Save the batch file written by operator.

d) SaveAs - Save the batch file to another file name.

e) Delete - Delete the batch file.

f) Run - execute Batch in the editor window.

g) Vi - run Vi editor

h) Print - Print the contents of file.

i) Quit - Quit Batch File Editor.

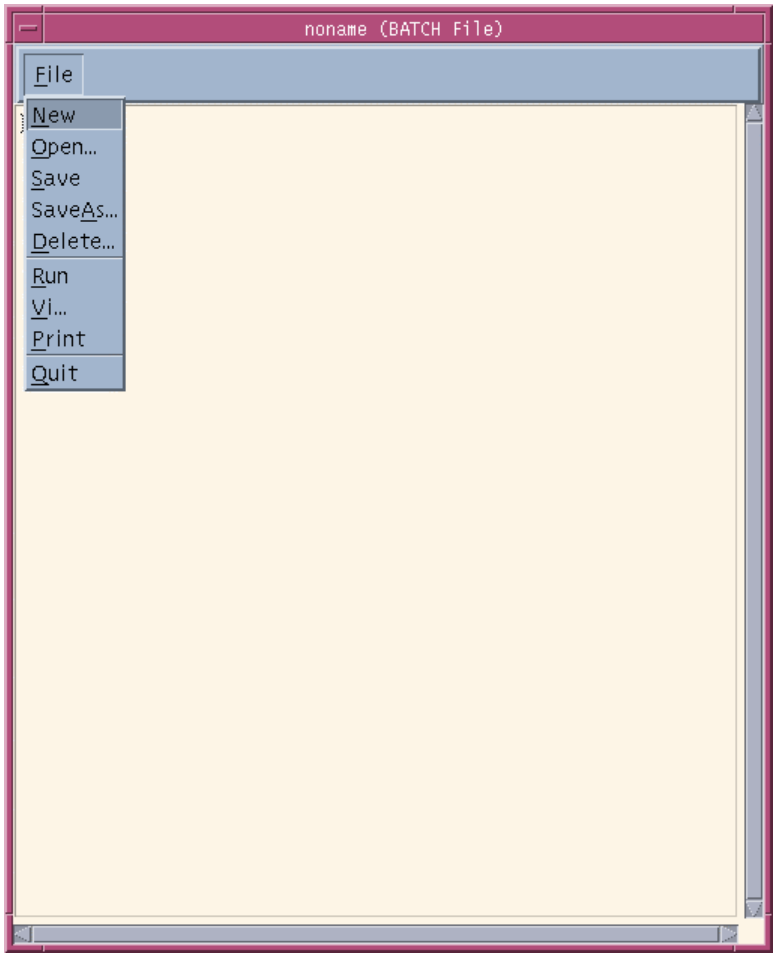

Figure 3.38 Batch File Editor

Example of Batch file :

3.1.5.3 Statistics Data Viewer

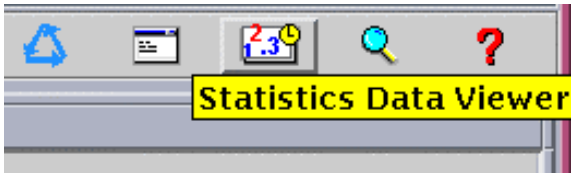

Figure 3.39 Service Panel – Statistics Data Viewer

- If you press the button "Statistics Data Viewer" in Service Panel, you can see the window such as Figure 3.40. The function of this window is that the binary statistic data occured for 10 minute , 1 hour or 1 day is converted to the text type data.

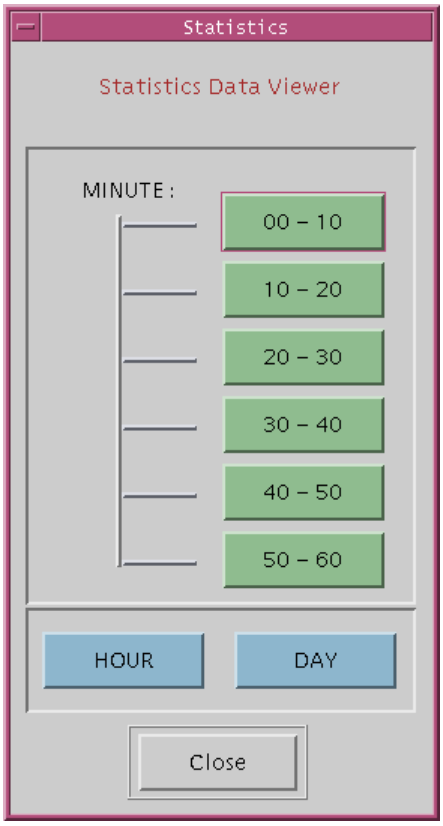

Figure 3.40 Statistics Data Viewer

- For example, if you press "00-10" button in the window of the Figure 3.40, the statistic text data for 10 minutes (00 - 10 minutes) is displayed in the following window. Scroll Bar is used for moving the screen or searching any words.
- Usage of the word searching function : If you enter the word that you want to search in the "Search : " Text Field and push the Arrow Button () (or enter the RETURN Key). Then the screen moves the location of the word to the first location of word or string that you want to search. It is possible to use the Down Arrow button or Return Key if you

want another locations of the word, The Up Arrow Button is used for searching the word to the upper field.

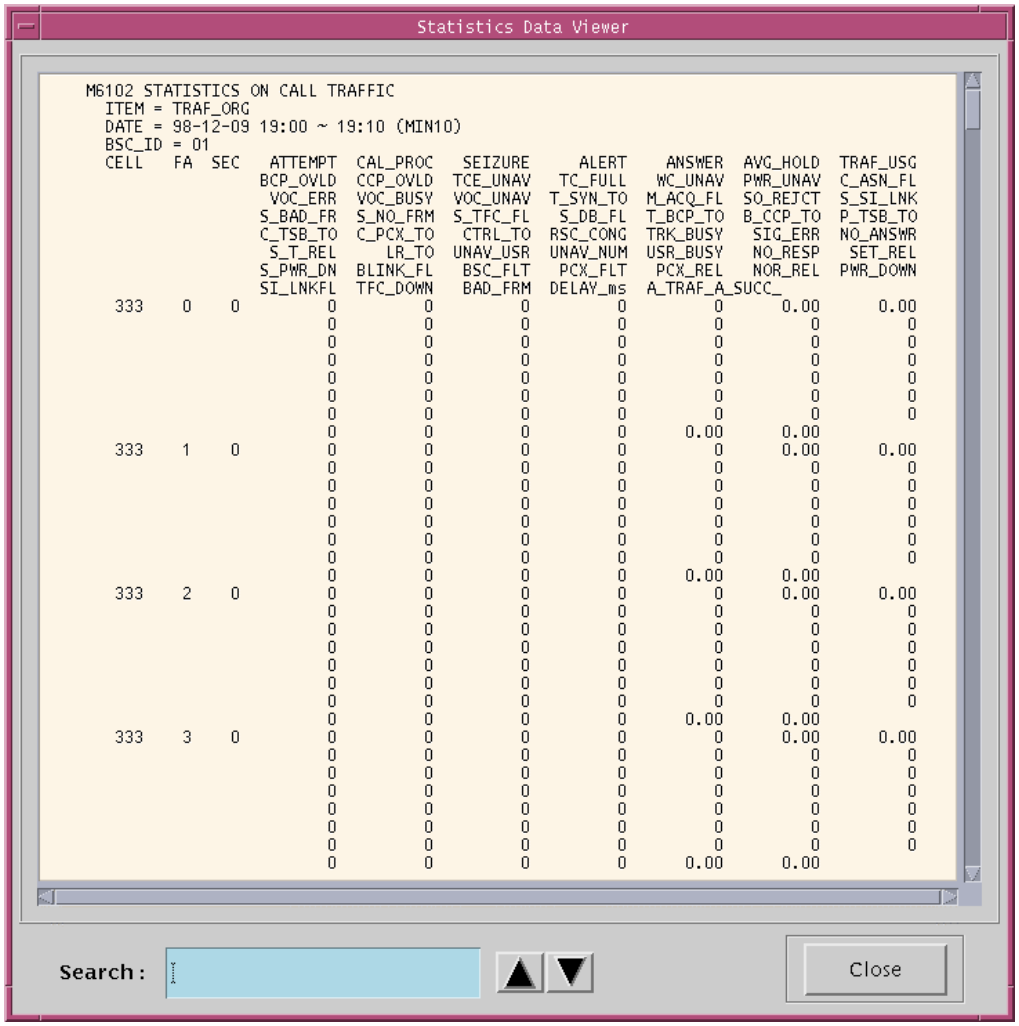

Figure 3.41 Statistics Data Viewer : 00-10

3.1.5.4 History Search

Figure 3.42 Service Panel – History Search

- The "History Search" of the Service Panel provides the fuction of "History search", shown in Figure 3.42. It is possible to search the types of date, time, kind, and code for

command and message history in BSM.

3.1.5.4.1 Search Message History

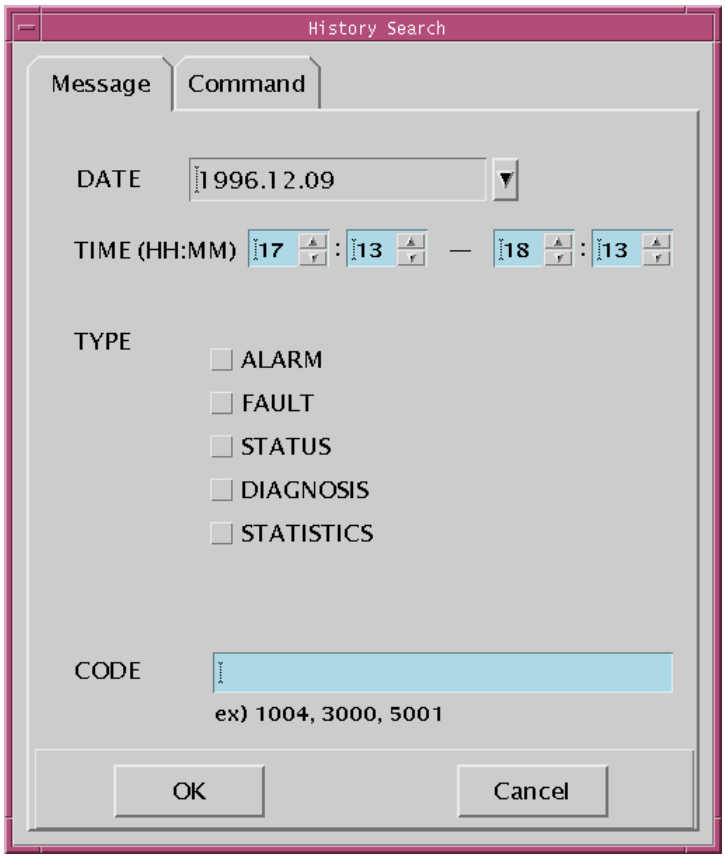

Figure 3.43 Search Message History

- Message History Search Initial Screen is shown in Figure 3.43. The default values for DATE and TIME are current values for one hours. If You don't set the TYPE and CODE, all messages are displayed for the setting values.
- TYPE can be selected several items at one time. Also, CODE can be inputted several values by using comma(,), Among messages of selected type, the messages related to inputted CODE are displayed
- For example, in case Figure 3.44, messages related to CODE number 4207, 4209, and 4001 among alarm, fault, and status messages occured from 17:14 to 18:14 in 09/12/1998 would be searched and displayed.

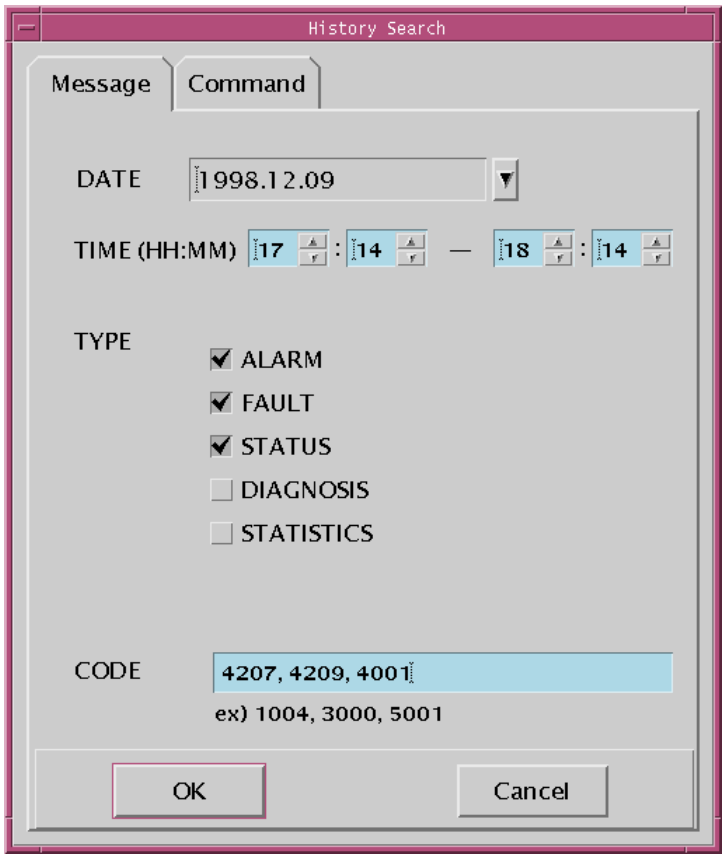

Figure 3.44 Example of Search Message History

- If "OK" button is clicked, the window like Figure 3.45 would be poped up at center of screen.

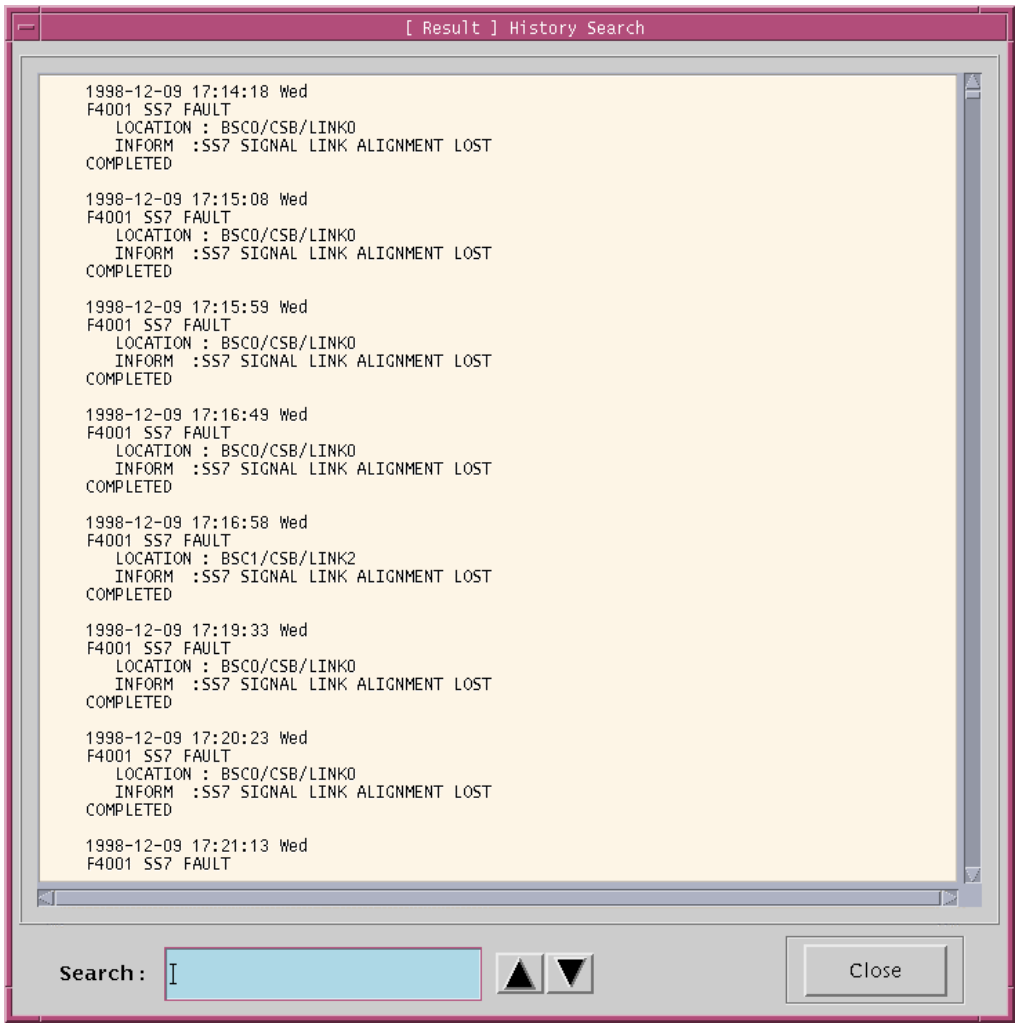

Figure 3.45 Result of Search Message History

3.1.5.4.2 Search Command History

- "Command history search initial window" is showned in Figure 3.46. Operation can be refferd to "message history search".

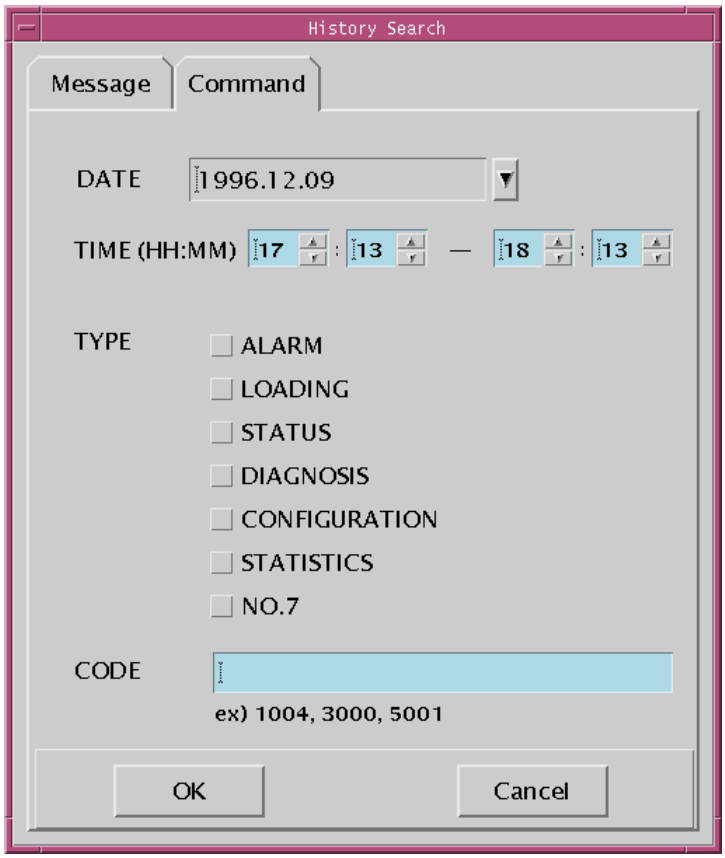

Figure 3.46 Search Command History

3.1.5.5 Help

Figure 3.47 Service Panel – Help of Commands

- Press "Help" in the Service Panel of Figure 3.47, and "Help Selection Dialog" window of Figure 3.48 is represented.

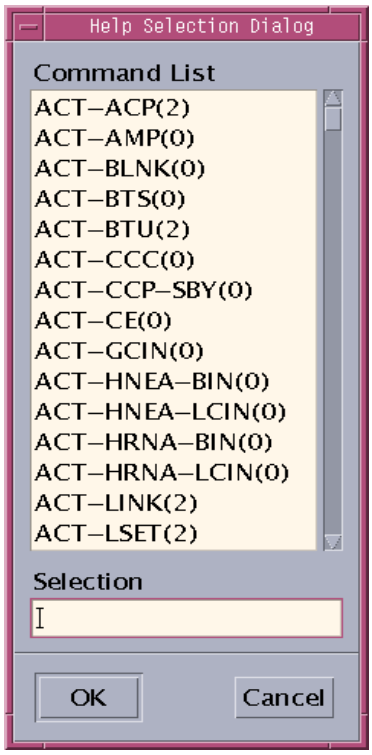

Figure 3.48 Help Selection Dialog

- Select one command in the command list and press "OK" button(*or* Double-click one command), and the help message for the command appears:

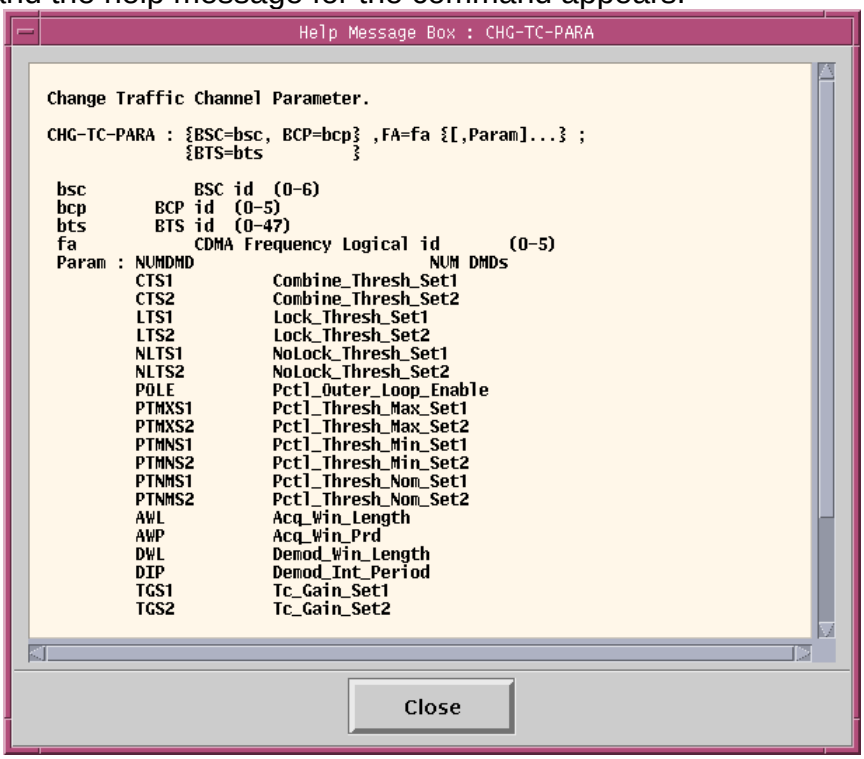

Figure 3.49 Help Message

3.1.6 Operations of "Alarm" window

Alarm window displays the fault status of each subsystem in the system. It uses several colors to report the status of system to the operator efficiently and effectively in the window with text message. So, you can understand easily in overall of system.

3.1.6.1 Types of Alarm Displays

The fault that operators take action rapidly must create the alarms. There are three types of alarms as follows:

(1) Audible alarm – outputs the voice and sound alarms through the speaker.
(2) Visible alarm – outputs the colorful alarm display through the monitor.
(3) Alarm message – outputs the text alarm messages in the output window.

3.1.6.2 Grades of Alarms

(1) Normal alarm

This represents a normal status of subsystem and BSM displays this status with green color.

(2) Critical alarm

This grade of alarm is critical to the system. So, this alarm is required to take emergency actions for the fault status with no regard to the occurrence time of fault. BSM displays these alarms with red color.

(3) Major alarm

This grade of alarm has an effect on services of system. It represents the fault status or malfunction of main circuits. These faults are reported to operator immediately and enable him to diagnose the functions of system or to recover the errors. The priority of this alarm is not prior to that of critical alarm. So, this alarm effects on the performance of the system directly or steadily (Orange).

(4) Minor alarm

This grade of alarm has a little effect on services of the system or subscribers. That is, this alarm hardly effects on the functions of call processing. The priority of this alarm

is lowest (Yellow).

(5) Not Configured / Not Equip

This grade of alarm is not equipped to devices or cards (Gray).

3.1.6.3 The method of alarm detection

If the system reports the alarms to the operator and BSM, BSM displays the alarm status to the corresponding location in BSM using colors according to the grade of alarm.

3.1.6.4 Main window of subsystems

Main window is composed of four parts: BSC, GCIN, GPS and BTS. If you want to know the status of corresponding subsystems, you move the mouse to the button of corresponding subsystem and click it.

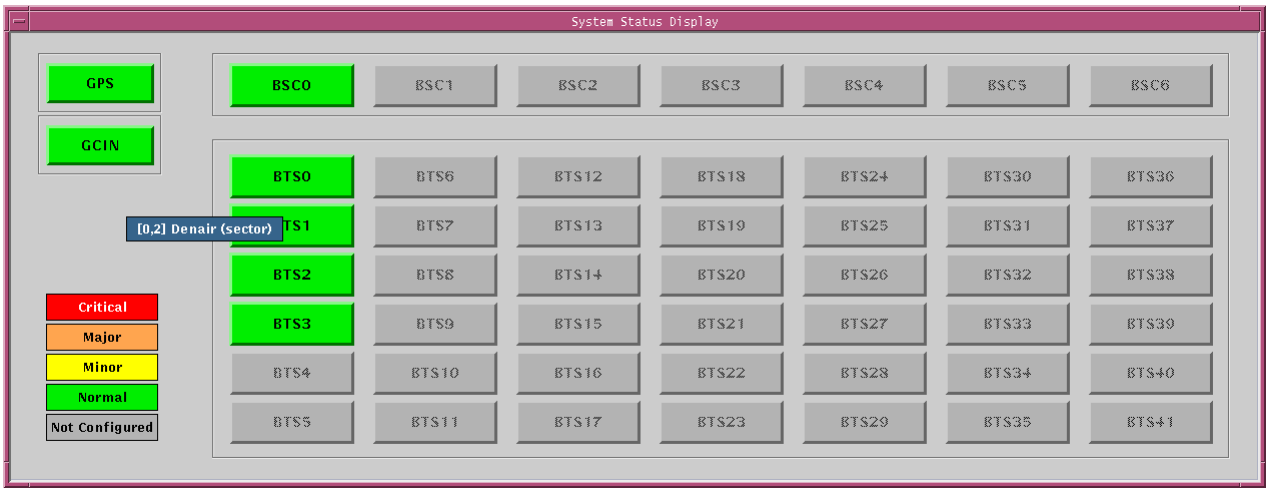

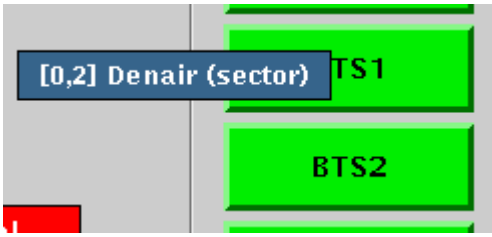

Figure 3.50 Main window of subsystems

3.1.6.4.1 Main window of BTS

If you intend to know the status of BTS, you may click the button of corresponding BTS ID. Then, the following window of Figure 3.51 and Figure 3.52 displays and represents all the statuses of BTS in detail. The board equipped in the system displays green color. If one of them produces alarms, BSM displays its status with red, orange, and yellow color according to the grade of alarm.

You can move to the previous display window by pressing "Return" button or "Space bar" key.

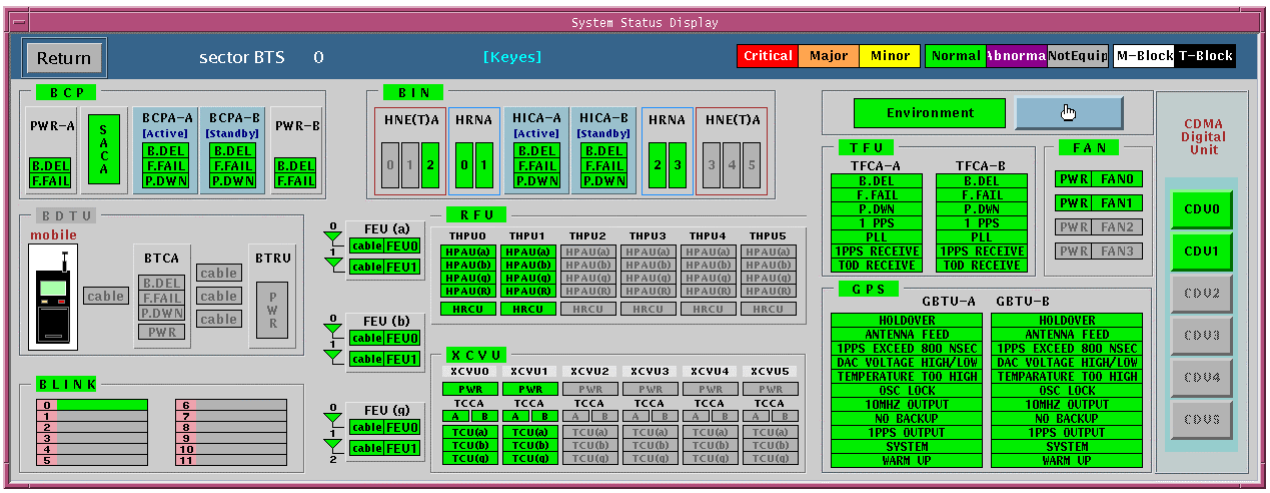

Figure 3.51 Main window of BTS

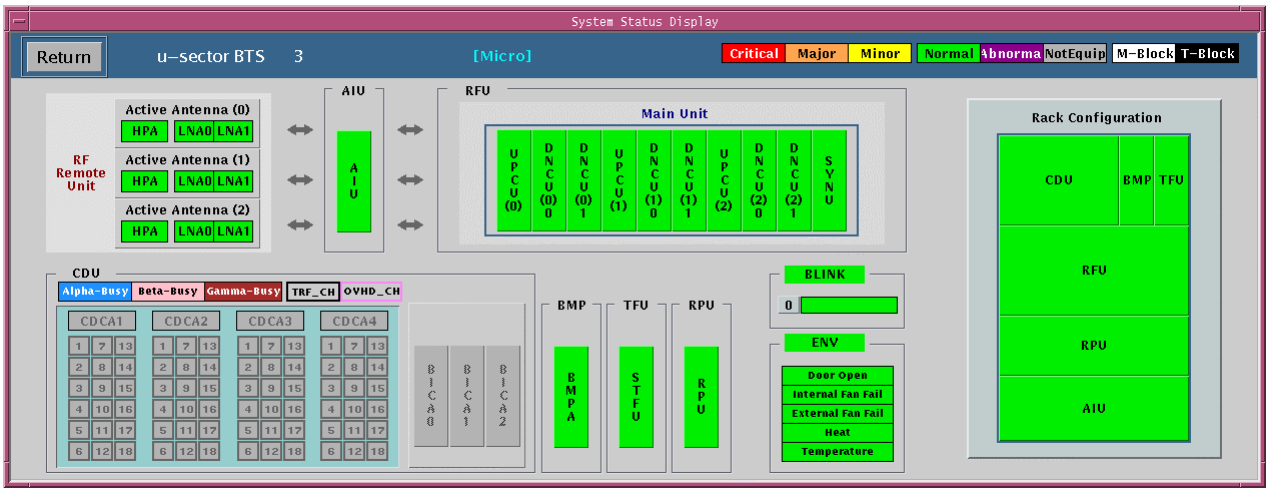

Figure 3.52 Main window of Micro-BTS

3.1.6.4.2 Main window of CDU

If you press a "CDU" button in the window of Figure 3.51, the window of Figure 3.53

displays. If you press "Return' key or "Space bar" key, you can be back to the previous window.

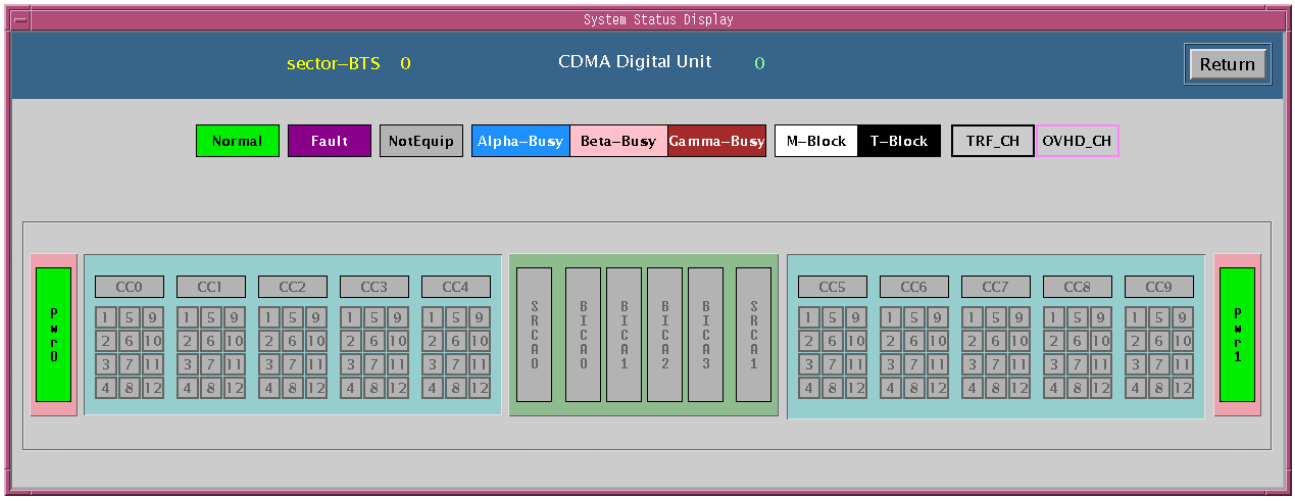

Figure 3.53 The window of CDU

3.1.6.4.3 Main window of ENV

If you press a "Environment" button in the window of Figure 3.51, the window of Figure 3.54 displays. If you press "Return' key or "Space bar" key, you can be back to the previous window.

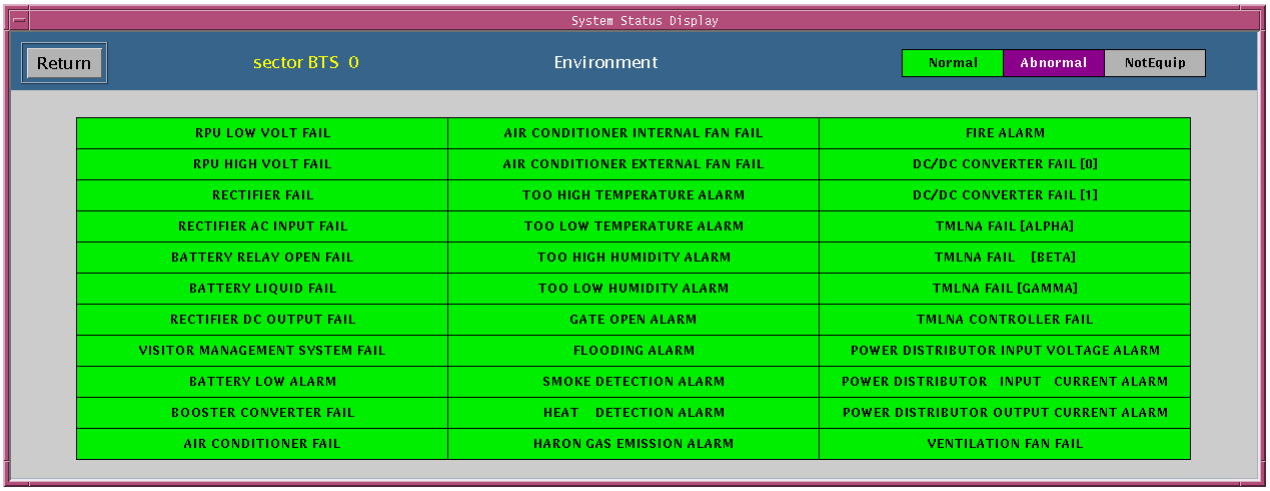

Figure 3.54 The window of BTS ENV

3.1.6.4.4 Main window of BSC

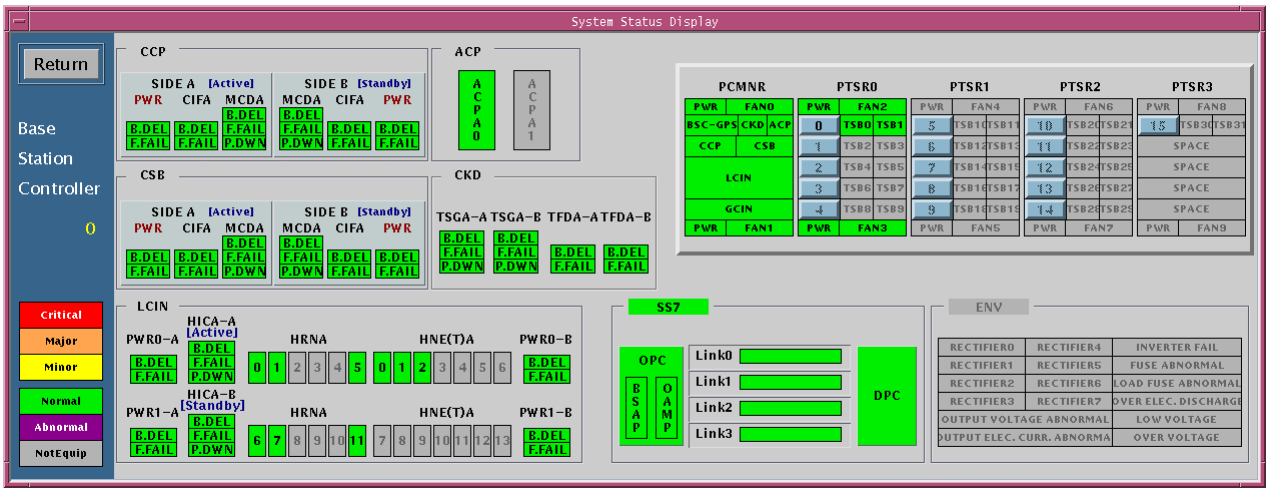

Figure 3.55 The window of BSC

3.1.6.4.5 Main window of TSB

If you press a TSB button in Figure 3.55, the following window of Figure 3.56 is represented.

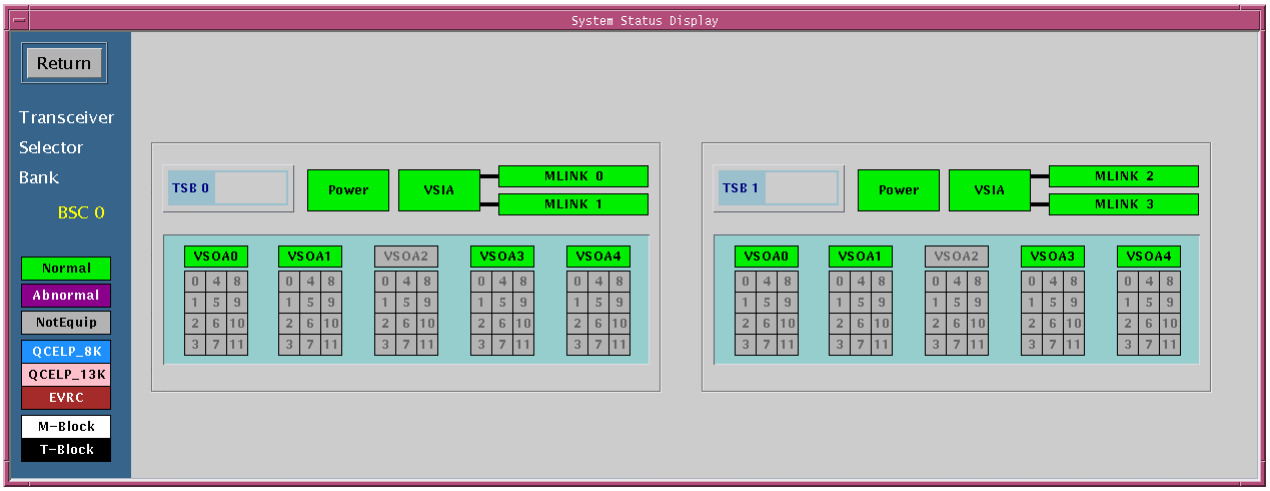

Figure 3.56 The window of TSB

3.1.6.4.6 Main of GPS

When you press the "GPS" button of Figure 3.50, the following window of Figure 3.57 is represented.

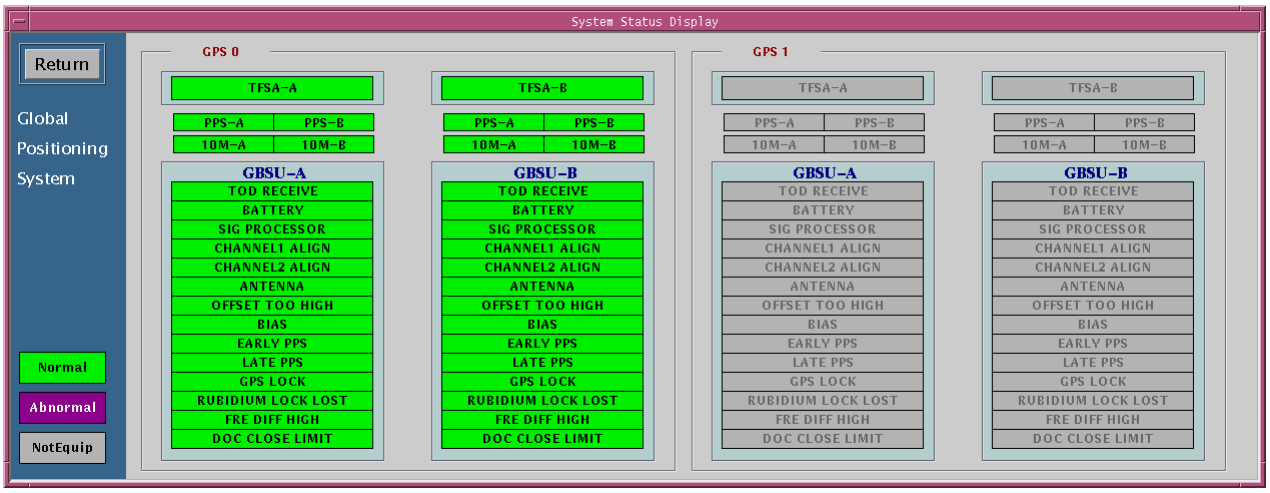

Figure 3.57 The window of GPS

3.1.6.4.7 Main of GCIN

When you press the "GCIN" button of Figure 3.50, the following window of Figure 3.58 is represented.

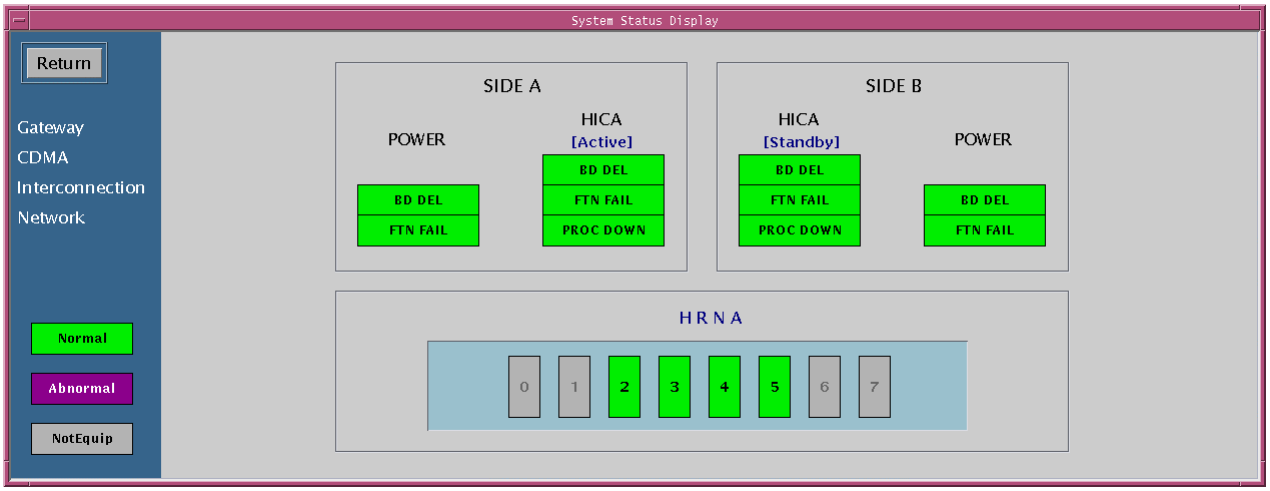

Figure 3.58 The window of GCIN

3.1.6.5 Command Handling Window

Command Handling window of Figure 3.59 outputs the contents of inputted command for the text-typed command or the command using GUI. And, it displays its results.

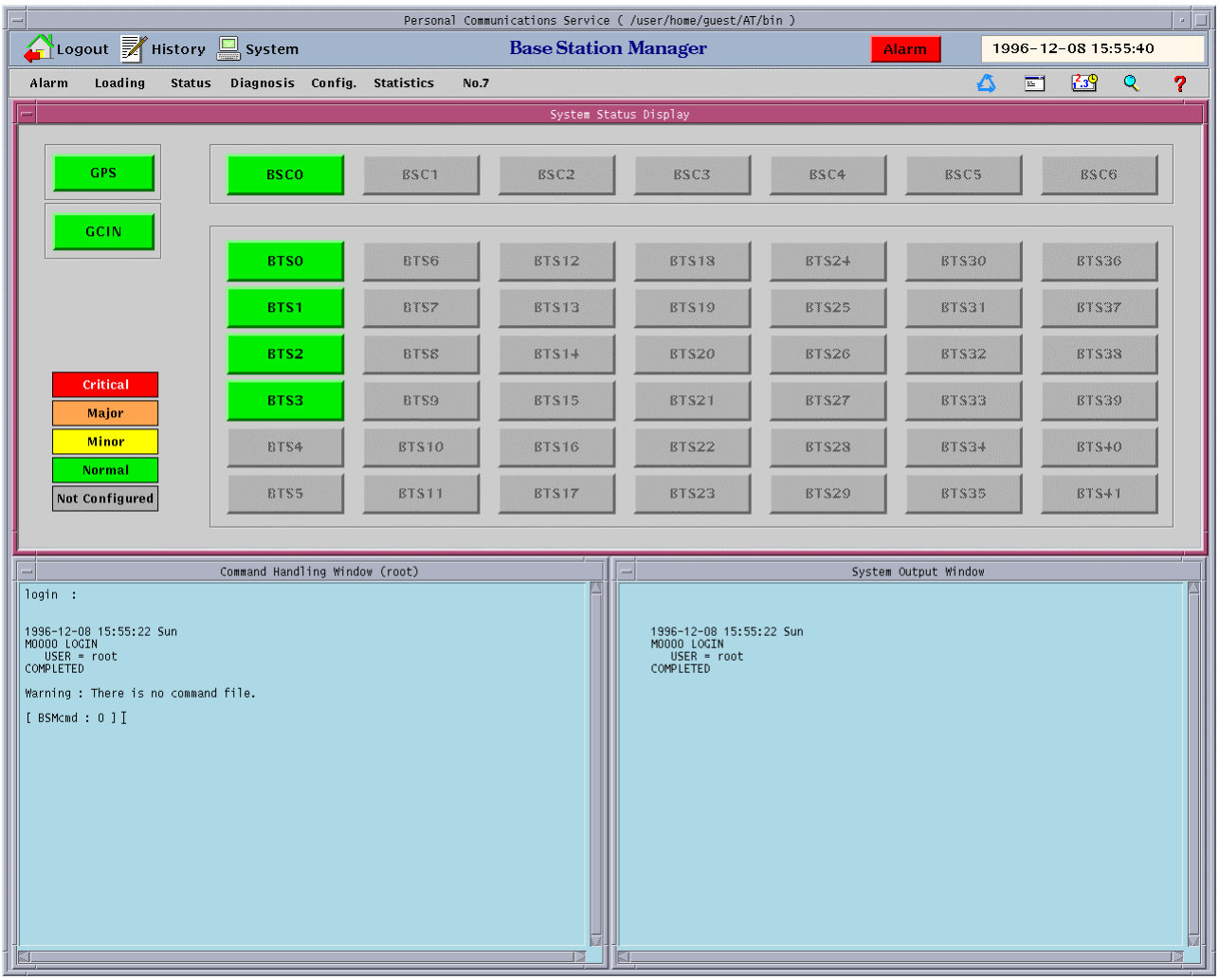

Figure 3.59 BSM Main Screen

3.1.6.5.1 Command Re-execution Method

This provides the simple method of executing the previously executed command. Re-execution of the recently entered 20 commands is available.

(1) h Command

Entering h (or H) in the Command window and pressing Enter key displays the list of recently entered 20 commands.

```
[ BSMcmd : 40 ] h
```

```
21    DIS-ALM-STS:BSC=0;
22    DIS-ALM-STS:BSC=1;
23    DIS-ALM-STS:BSC=2;
24    DIS-ALM-STS:BSC=3;
25    DIS-ALM-STS:BSC=4;
26    DIS-ALM-STS:BSC=5;
27    DIS-ALM-STS:BSC=6;
28    DIS-ALM-STS:BSC=7;
29    DIS-ALM-STS:BSC=8;
30    DIS-ALM-STS:BSC=9;
31    DIS-ALM-STS:BSC=10;
32    DIS-ALM-STS:BSC=11;
33    DIS-ALM-STS:BTS=0;
34    DIS-ALM-STS:BTS=1;
35    DIS-ALM-STS:BTS=2;
36    DIS-ALM-STS:BTS=3;
37    DIS-ALM-STS:BTS=4;
38    DIS-ALM-STS:BTS=5;
39    DIS-ALM-STS:BTS=6;
40    h

    [ BSMcmd : 41 ]
```

Table **Error! No sequence specified.**. Example of h Command Result

(2) Command Re-execution

1) ! + (Command Number)
2) ! + (Command Initial String)
3) !!

You can re-execute the previously entered command by the above 3 methods. The next table follows the Example of h Command Result of Table 1.

```
35    DIS-ALM-STS:BTS=2;
36    DIS-ALM-STS:BTS=3;
37    DIS-ALM-STS:BTS=4;
38    DIS-ALM-STS:BTS=5;
39    DIS-ALM-STS:BTS=6;
40    H
```

[BSMcmd : 41] ***!35***

Table **Error! No sequence specified.**. ! + Command Number

```
35   DIS-ALM-STS:BTS=2;
36   DIS-ALM-STS:BTS=3;
37   DIS-ALM-STS:BTS=4;
38   DIS-ALM-STS:BTS=5;
39   DIS-ALM-STS:BTS=6;
40   H

 [ BSMcmd : 41 ] DIS-ALM-STS:BTS=2;
```

Table **Error! No sequence specified.**. Result

- Input (in italic) as shown in the Table 2 is replaced by the command corresponding to the number as in the Table 3. Pressing Enter key at this state executes the command immediately. If you want to modify the command, edit with the mouse, Delete or Backspace key and press Enter key.

```
35   DIS-ALM-STS:BTS=2;
36   DIS-ALM-STS:BTS=3;
37   DIS-ALM-STS:BTS=4;
38   DIS-ALM-STS:BTS=5;
39   DIS-ALM-STS:BTS=6;
40   h

 [ BSMcmd : 41 ] !DI
```

Table **Error! No sequence specified.**. ! + String

```
35   DIS-ALM-STS:BTS=2;
36   DIS-ALM-STS:BTS=3;
37   DIS-ALM-STS:BTS=4;
38   DIS-ALM-STS:BTS=5;
39   DIS-ALM-STS:BTS=6;
40   H

 [ BSMcmd : 41 ] DIS-ALM-STS:BTS=6;
```

Table **Error! No sequence specified.**. Result

- Input (in italic) as shown in the Table 4 is replaced by the latest command that begins

with the string as in the Table 5. Pressing Enter key at this state executes the command immediately. If you want to modify the command, edit with the mouse, Delete or Backspace key and press Enter key.

```
35   DIS-ALM-STS:BTS=2;
36   DIS-ALM-STS:BTS=3;
37   DIS-ALM-STS:BTS=4;
38   DIS-ALM-STS:BTS=5;
39   DIS-ALM-STS:BTS=6;
40   h

 [ BSMcmd : 41 ] DIS-ALM-STS:BSC=0;

 1998-04-18 11:40:34 Fri
 M1004 DISPLAY ALARM STATUS
    CCP 0 NO ALARM STATUS

       DISPLAY BCP ALARM COUNT
       BCP_ID    CRI    MAJ   MIN

 [ BSMcmd : 42 ] !!
```

Table **Error! No sequence specified.**. !! Command

```
38   DIS-ALM-STS:BTS=5;
39   DIS-ALM-STS:BTS=6;
40   H

 [ BSMcmd : 41 ] DIS-ALM-STS:BSC=0;

 1998-04-18 11:40:34 Fri
 M1004 DISPLAY ALARM STATUS
    CCP 0 NO ALARM STATUS

       DISPLAY BCP ALARM COUNT
       BCP_ID    CRI    MAJ   MIN

 [ BSMcmd : 42 ] DIS-ALM-STS:BSC=0;
```

Table **Error! No sequence specified.**. Result

- Input (in italic) as shown in the Table 6 is replaced by the previously executed command

as in the Table 7. Pressing Enter key at this state executes the command immediately. If you want to modify the command, edit with the mouse, Delete or Backspace key and press Enter key.

3.1.6.5.2 Help Command in the Command Handling Window

(1) (Command + '?')

- In command window, if you want to print the command help, you must input "command + '?'" or "command + '?'+';'".

```
[ BSMcmd : 1 ] CHG-SECT-INFO?  or  CHG-SECT-INFO?;

1998-07-02 09:37:34 Thu
```

- CHG-SECT-INFO HELP MESSAGE
- Change Sector Information.

```
CHG-SECT-INFO : {BSC=bsc, BCP=bcp}, SECT = sect {[Param]} ;
                    {BTS=bts                 }

bsc            BSC id  (0-11)
bcp            BCP id  (0-31)
bts            BTS id  (0-383)
sect                   Sector id   (ALPHA, BETA, GAMMA)
Param :
       PILOT          Pilot Offset
       TXFA           Tx Fine Adjust
       TXCA           Tx Coarse Adjust
       RXFA           Rx Fine Adjust
       RXCA           Rx Coarse Adjust
       RTDTHR         Common Round Trip Delay Thresh
       CYCIDX         Max Slot Cycle Index
       PREV           CAI  Revision
       PMREV          CAI Minimum Revision
```

(2) ?XXX ('?' + string)

- If you attatched '?' at any string, you can see all commands involving the string.

```
[ BSMcmd : 1 ] ?SECT
  1        CHG-SECT-INFO
  2        DIS-SECT-INFO

[ BSMcmd : 2 ] ?CE
  3        CHG-CE-CONF
  4        CHG-CE-TYPE
  5        CHG-SCEL-INFO
  6        DIS-CE-STS
  7        DIS-PN-CELL
  8        DIS-SCEL-INFO
  9        DIS-TCE-STS
  10       STRT-STAT-CE
  11       TST-CE

[ BSMcmd : 3 ] ?-CE-
  12       CHG-CE-CONF
  13       CHG-CE-TYPE
  14       DIS-CE-STS

[ BSMcmd : 3 ] ?
  1               ACT-LINK
  2               ACT-LSET
  3               ACT-OVLD-THR
  4               ADD-LDNG-BLK
  5               ADD-NEBR
  6               ALW-ALM-MSG
  . . .
 248          TST-SVE
 249          UINH-LINK
```

All commands are displayed.

3.2 System Status Management

3.2.1 System Status Test

BSC system may always audit and monitor processor status, alarm status, channel and link status whether the call is normal. If the status is abnormal or system has a certain fault, BSC system may take an action and then maintain the active status of system.

3.2.1.1 Alarm Test

(1) Alarm Monitoring

1) If the BSC system is an abnormal status or makes a certain fault, system may be alerting the alarms. So, it must maintain the audible or visible alarm status in order to output and create an alarm.
2) If you inhibited the audible or visible alarm, you must be always aware of not outputting those alarms when the system is an abnormal status or a fault.
3) In reporting alarms to the system, it outputs the content of alarm and it checks the corresponding block automatically. So, it solves the problems to the reported alarm.
4) You input a command of outputting alarm status and verify whether the alarm is occurred.

(2) Alarm Test

1) You enable the system to output the alarm messages created until now.

```
C1004  DIS-ALM-STS:[BSC=aa[,BCP=bb],BTS=cc];
aa :  BSC  ID
bb :  BCP  ID
cc :  BTS  ID
```

You make sure of the number of alarm messages in the corresponding block.

2) You are able to output the alarm message information and then confirm the

corresponding alarms.

```
C1006  DIS-ALM-INFO:AN=aa;
aa  :  Alarm  Number  ( 0000  -  9999 )
```

In the output messages, you confirm the contents of alarms and check the corresponding block. You have to take an action for the corresponding block in order to solve the alarm status.

3) You verify to the inhibited output messages of a lot of alarm messages.

```
C1007  DIS-INH-ALM;
```

In this case, alarm code is not included in the output message.

4) You can change the alarm message generation mode. So, you can confirm to the alarm messages occurred.

```
C1000  ALW-ALM-MSG:AN=aa;
aa  :  Alarm Code Number  ( 0000  -  9999 )
```

You verify whether the alarm of inhibited output is not included on checking the corresponding devices.

3.2.1.2 Fault Test

(1) Fault Audit

1) You always verify whether the fault is occurred according to the corresponding system devices.

2) You must audit if the status of channel or link is blocked. So, you manage these resources and then maintain them to the normal states for efficient call processing.

3) You check or audit the output alarm messages and verify if the corresponding

devices are faults or abnormal.

(2) Fault Test for the listed items

1) You make sure whether the channel or link is blocked.

```
C3306  DIS-OOS-STS:BSC=aa,[BCP=bb,]DEV=cc,TYPE=dd;
aa  :  BSC  ID
bb  :  BCP  ID
cc  :  DEVICE  TYPE  ( SVE/MLNK/BLNK/TCE )
dd  :  Type  ( MBLK/FBLK/TBLK )
```

2) You verify which fault message is inhibited.

```
C1008  DIS-INH-FLT;
```

The code of inhibiting message dose not report to the system.

3) When you want to print the inhibited fault message, you must release the messages that cannot print or report to the system. Therefore, you have to allow the messages to print.

```
C1002  ALW-FLT-MSG:FN=aa;
aa  :  Fault  CodeNumber  ( 0000  -  9999 )
```

3.2.1.3 Test for control of processor status

(1) The status audit of processor

1) You always verify whether the status of processors is normal.

2) You change the status of stand-by processor to active processor and verify if the status of this processor is normal or abnormal.

3) If the status of processor is abnormal, you have to repair it rapidly.

4) For the processor is the main part of system, you have to maintain that one or more

than processor is normal at least.

(2) Status test of processor

1) You verify if the status of CCP in the system is normal.

```
C3001  DIS-CCP-STS:[BSC=aa];
aa  :  BSC  ID
```

If you don't input the corresponding BSC ID, you can verify the statues of all CCPs.

2) After you check and verify the status of processors, you switch over the status of processor.

```
C2012  SWT-PRC:BSC=aa,PROC=CCP;
aa  :  BSC  ID
```

You check the output message and verify if CCP is switched over in that message. After the processor is switched over, you verify if its status is normal. If the system does not have a standby processor, that is, it has only one processor, this command is unable to be executed.

3) You verify the status of SIP in the system.

```
C3002  DIS-SIP-STS:BSC=aa;
aa  :  BSC  ID
```

4) You check the status of SVP in the system.

```
C3003  DIS-SVP-STS:BSC=aa,[SIP=bb];
aa  :  BSC  ID
bb  :  SIP  ID
```

5) You verify the status of ACP in the system.

```
C3401  DIS-BSC-ACP:[BSC=aa];
aa  :  BSC  ID
```

6) You verify whether the processors of BTS are normal or abnormal.

```
C3101 DIS-BTS-PRC:BSC=aa,BCP=bb[,BTS=cc];
aa  :  BSC  ID
bb  :  BCP  ID
cc  :  BTS  ID
```

7) You check whether the status of cards or boards in BTS is normal.

```
C3102 DIS-BTS-CARD:BSC=aa,BCP=bb[,BTS=cc],CARD=dd,MIC_CARD=ee;
aa  :  BSC  ID
bb  :  BCP  ID
cc  :  BTS  ID
dd  :  SRC,TCC,TCU,TFC,BIC,GPS,AMP
ee  :  UP,DOWN,SYNU,BIC,STFU,RFRU
```

3.2.1.4 Status test for links and channels

(1) Status audit of links and channels

1) You verify if the statuses of links and channels are normal.

2) When the links of BTS is blocked, you note that the call is cut off.

3) When the links and channels are blocked, you use TST command to check the states of them.

(2) Status test of links

1) You check whether the status of MSC-links is normal.

```
C3005  DIS-MLNK-STS:BSC=aa;
aa  :  BSC  ID
```

2) You verify the status of BTS-links.

```
C3007  DIS-BLNK-STS:[BSC=aa,BCP=bb];
                    [BTS=c]
aa  :  BSC  ID
bb  :  BCP  ID
cc  :  BTS  ID
```

(3) Status test of channel

1) You check the status of vocoder.

```
C3004  DIS-SVE-STS:BSC=aa,SIP=bb[,SVP=cc];
aa  :  BSC  ID
bb  :  SIP  ID
cc  :  SVP  ID
```

2) You verify the status of CE.

```
C3106  DIS-CE-STS:BSC=aa,BCP=bb[,BTS=cc],DU=dd;
aa  :  BSC  ID
bb  :  BCP  ID
cc  :  BTS  ID
dd  :  DU  ID
```

3.2.2 System Diagnosis

Diagnosis is the testing of resources that are closely related to call processing in operating the system and its results is reported to the operators. If its results are abnormal, you exclude this resource for the service of call process. If the resource of call process is recoverable, you enable this resource to use the call services or to add the resource pool of system immediately.

3.2.2.1 Diagnosis of vocoder

(1) Diagnostic method

There are four diagnostic methods of vocoder: Polling, Code compare, physical test, and algorithm test.

1) Polling

You use this method to initialize the SVE(DSP) which is requested to diagnose. As a result of its response, you can verify or check the status of vocoder.

2) Code Compare

This diagnostic method uses the result that the system compares the original DSP code in VSOA-A1's DRAM to the code in DSP's SRAM.

If the system starts to diagnose the vocoders, it compares the code of vocoder requested which is the code of SRAM in the DSP module with that of normal vocoder which is the code of DRAM in VSOA-A1.

If the result of comparing the codes is identical, system may initialize the vocoder. If the system receives acknowledgment from vocoder, system regards this vocoder as normal. Otherwise, system decides that the status of vocoder itself is abnormal.

If the result of comparing the codes is not same, system loads the normal code to the DSP's SRAM and replaces the code of SRAM. Then, system compares the codes again. If the result of comparing the codes also is not same, system decides the SRAM-related error.

If the result of comparing as above is same, system sends the initialization message to the vocoder again and then waits for its response.

If the system receives the response for the message of initialization, this response represents that the abnormal vocoder changes to the normal one again. Otherwise, system decides that the status of vocoder is abnormal.

3) Physical Test *(Will be implemented)*

It tests the state of the internal ALU and RAM of DSP.

4) Algorithm Test *(Will be implemented)*

As it cmopares the the test tone in DSP with the encoding and decoding data using the vocoder algorithm pointed by the operator, you can check the state of the vocoder algorithm

5) All Test *(Will be implemented)*

It stops disgnosting in the step if it detecs the error diagnosting the vocoder as the following sequence ; Code compare Physical test Algorithm test.

(2) Diagnostic Test

1) You can use the following command to verify the status of vocoder.

```
C3004  DIS-SVE-STS:BSC=a,SIP=b[,SVP=c];
a : BSC  Id
b : SIP  Id
c : SVP  Id
```

2) Next, you test the vocoder using the following command.

```
C4017  TST-SVE:BSC=a,SIP=b[,SVP=c,SVE=d],LEVEL=e,ALGORITHM=f;
a : BSC  Id
b : SIP   Id
c : SVP  Id
d : SVE  Id
e : Test Level  (POLL_TST/CODE_CMP/PHYSICAL_TST/ALGORITHM_TST/ALL)
f : Vocoder algorithm (QCELP_8K/QCELP_13K/EVRC)
```

(3) Inter-working with call processing

1) For vocoder is related with call processing directly, you can confirm enough to diagnose the status of it.
2) In case of maintaining call, system decides on the normal state of vocoder. System need not to diagnose, and reports the "BUSY" state to the operators.
3) If the vocoder is idle, system changes its state to test block (T_BLK) in order not to use this resource not to set a call on diagnosing. And then, system enters to diagnose.
4) After the diagnosis end up, system changes the state to idle and is able to use or set a call service.

(4) Analysis for result of diagnosis

1) As a result of polling, vocoder sends VOC_OK/VOC_NOK to the system. If the system is not able to receive the response normally, it decides on the abnormal state of vocoder.

2) The response of comparing to code of memory is composed to three messages: VOC_OK, VOC_NOK, and RAM_ERROR. If the code is normal or system does not receive the response, system decides that DSP chip is abnormal or makes a problem. If the vocoders do not load normally to DSP chip, system decides that the problem results from the error of SRAM or DSP chip.

3)[note 1] The vocoder reports the result of Physical test to VOC_OK|ALU_ERR|DSP_RAM_ERR|RAM/ALU_ERR. ALU_ERR is the error in the arithmetic or register and DSP_RAM_ERR is the error in RAM of DSP. RAM/ALU_ERR is the error

4) The vocoder reports the result of Algorithm test to VOC_OK|FREG_ERR|GAIN_ERR|FREQ/GAIN_ERR. FREQ_ERR is the error for the frequency deviation exceeding the reference value after the generated signal encoding and decoding. GAIN_ERR is the error for the energy deviation exceeding the reference value after the generated signal encoding and decoding. FREQ/GAIN_ERR is the error for occurring both FREQ_ERR and GAIN_ERR.

5) The result of All test is reported all the case for 2) ~ 4).

6) If the error except the result of the seccsion 1) ~ 4), for example, NRSP_SVE|VOC_BUSY|ALRDY_TEST|VOC_NEQ|NRSP_SVP, is reported, it is the result of the abnormal diagnostic test. NRSP_SVE is the no responce of the vocoder and VOC_BUSY is the case that the vocoder does not carry out the diagnostic order. ALRDY_TEST is the case that the vocoder is executing other diagnostic command and VOC_NEQ is the case that the vocoder is not equipped yet. NRSP_SVP is the case that it can't execute the order because of SVP no response.

3.2.2.2 Diagnosis of HRNA

(1) Diagnostic method

The diagnosis of HRNA's Node is executed by HICA. There are two methods of diagnoses – Polling and Self Test – but both methods are concurrently executed.

1) Polling

[note 1] 3) ~ 6) will be implemented ASAP.

HICA sends polling messages to each of nodes which interfaces with processors. As a response of several polling messages, HICA reports the status of nodes to the system.

2) Self Test

Without having response to polling, HICA enters to the self test and system verifies the minimum status of node. This test can be only used to setting to alarm mask in case of not connecting to the processors. Self Test is the test which is a loop-back test for the Tx and Rx of node.

(2) Diagnostic test

1) You can verify the status of HRNA using the following command.

```
C3204  DIS-GCIN-NODE;
C3205  DIS-LCIN-NODE:BSC=a;
C3206  DIS-BIN-NODE:{BSC=a,BCP=b};
                    {BTS=c}
a : BSC  Id
b : BCP  Id
c : BTS  Id
```

2) You can use the following command to test and diagnose the node of HRNA.

```
C4016  TST-HRNA:DEV=a,{BSC=b,BCP=c,}HRNA=e,NODE=f;
                      {BTS=d,}
a : Test HRNA Type  (GCIN/LCIN/BIN)
b : BSC  Id
c : BCP  Id
d : BTS  Id
e : HRNA  Id
f : HRNA NODE
```

(3) Analysis for the result of diagnosis

1) For the diagnosis of node is composed of one network unlike another test, this test is impossible to test, after excluding the call services.

2) The diagnostic result of node represents OK or NOK. This result is meaningful for

the only node that connects to the corresponding device, because this is capable of self-test.

3.2.2.3 Diagnosis of BTS-link

(1) Diagnostic method

The diagnosis of B-link is executed by HICA. There are three type of tests : node test, local loop-back test and remote loop-back test. This test is able to execute all tests concurrently at once and you can verify the overall status of B-link by executing concurrently.

1) Test method of node

This is a loop-back test for the node of HNTA.

2) Method of local loop-back test

You enable this loop-back test in the T1 FRAMER of HNTA which controls to the mechanical links to check the data returned from HICA.

3) Method of remote loop-back test

This is executed by HICA, which is a part of LCIN and exchanges messages or sends/receives the data. First, HICA connects to the Rx and Tx of HNTA's T1 FRAMER in peer BIN and then starts to the loop-back mode test. After diagnosing, HICA changes diagnostic mode to the original test mode.

(2) Diagnostic test

1) You use the following command to verify the status of BTS-link.

```
C3007  DIS-BLNK-STS:{BSC=a,BCP=b};
                    {BTS=c}
a : BSC  Id
b : BCP  Id
c : BTS  Id
```

2) You test for the BTS-links using the following command.

```
C4013  TST-BLNK:{BSC=b,BCP=c,}LINK=c,LEVEL=d,CNT=e,TERM=f;
                              {BTS=g}
a : BSC  Id
b : BCP  Id
c : Link  Id
d : Test Level
(NODE_TST  :  BIN, LCIN HNTA Node Test)
(LOC_LOOP  :  BIN HICA <--> BIN HNTA, LCIN HICA <--> LCIN HNTA)
(RMT_LOOP  :  LCIN HICA <--> BIN HNTA)
e : TEST COUNT (Number of Test : if LEVEL is set to NODE_TST/LOC_LOOP, executes)
f : TEST Time(Minute : in case of level being a RMT_LOOP)
g : BTS  Id
```

(3) Interworking of call processing

1) If the diagnosis of BTS-link is executed, all the signals lose themselves.

2) Before diagnosing, you consider sufficiently a possibility that several calls multiplexed connect to the BTS-links.

3) Once the diagnostic command is executed, HICA notifies the T_BLOCK State of BTS links to both BCP and CCP in order to inhibit them from transmitting all of control signals. HICA continues to audit if the B-link is used for setting several calls. As soon as the B-link is fully idle, HICA enters to diagnose the B-links.

4) After finishing the diagnosis, HICA releases T_BLOCK of BTS-links and then is about to normal status of BTS-link.

5) When the system is normal and two or more than BTS-links are operating or useful for call services at least, system only diagnoses them normally.

6) If the system uses only one BTS-link for call services and the system diagnoses this link, it results in canceling diagnosis. On behalf of this test, HICA diagnoses one hundred times of polling test for the corresponding link.

(4) Analysis for the diagnostic result

1) System counts the number of successful tests – HNTA Node's test and Local loop-back test.

2) The results of remote loop back test represent the number of sending test packets, successful packets and time-out packets during the test. Also, they represent the number of packet loss returned. Additionally, HICA verifies bit error (Frame alignment signal error), slip error and bipolar error. Parts of these messages can be reported in executing the loop-back test actually or finishing the test.

3.2.2.4 Diagnosis of BTS's Channel Element

(1) Diagnostic method

There is a polling test for diagnosis of channel element in BTS.

(2) Diagnostic test

1) You can verify the status of channel element in BTS using the following command.

```
C3106  DIS-CE-STS:{BSC=a,BCP=b}, DU=d;
                  {BTS=c}
a : BSC  Id
b : BCP  Id
c : BTS  Id
d : Digital Unit Id
```

2) You can use the following command to test the status of channel element in BTS.

```
C4015  TST-CE:{BSC=a,BCP=b,}DUID=d,CDCA=e,SUBNODE=f,LEVEL=g,CNT=h;
              {BTS=c}
a : BSC  Id
b : BCP  Id
c : BTS  Id
d : Digital Unit Id
e : Channel Card Id
f : Subnode Id
g : Test Level
h : Polling Count
```

(3) Analysis for the diagnostic results

The number of response for polling is reported to the system.

3.2.2.5 Others

(1) Reserved diagnosis

Reserved diagnosis is a function of MMC + Timer. That is, for MMC is executed immediately, to diagnose on the busy hour itself is overloaded to the system. Therefore, diagnosis is in middle of night. So, all the MMC commands are able to reserve. For the information of reserved diagnosis is stored to PLD, system can get reserved diagnostic information regardless of power on/off. Reserved diagnosis is executed according to the information of PLD.

(2) Periodic Diagnosis

Periodic diagnosis is a function of MMC + Periodic Timer. That is, this is executed on given time every day. This corresponds to B-link, CE, and SVE. For all information are stored to the PLD, system can get the periodic diagnostic information from PLD regardless of power on/off. The functions of periodic diagnosis are as follows: allowance or disallowance for periodic test and change of test time.

(3) Automatic diagnosis

If the operator allows for this diagnosis by corresponding devices (BLNK or SVE), this diagnosis always happens automatically regardless of operator’s will. Automatic diagnosis is the audit on all the devices in the status management block – CSHX and BSHX. When the status is changed from normal to abnormal or from abnormal to normal, this diagnosis is executed immediately. If the devices are recoverable by diagnosis, system repairs and recovers them automatically.

3.2.3 Statistics

3.2.3.1 Overview

System can gather the statistic data according to the operator's request or period and reports them to the system. Therefore, the main goal of measurement and statistics is to use the statistic data to re-design the system in the future or to set or install the system based on these data. There are four grades or modules of measurement and statistics: collection of raw data, data manipulation, storing to the data, and transmitting.

3.2.3.2 Configuration and Operation

(1) Operation

1) This operation starts to the collection of data by the command of the statistics start command of BSM. It collects the data every 10 minutes and then reports to the BSM. If it receives the start measurement from BSM, it orders the call processing block to start the library calls. After it also receives the request for the measurement or response from the other processors, it sends the response signal to the BSM. BSM receives the data from call processing blocks through the libraries of CMMX and BMMX. CCOX is a block of call processing and it enables CMMX to fetch the data from the corresponding library buffer whenever producing events.

2) The start-up flow of measurement and statistics is as follows:

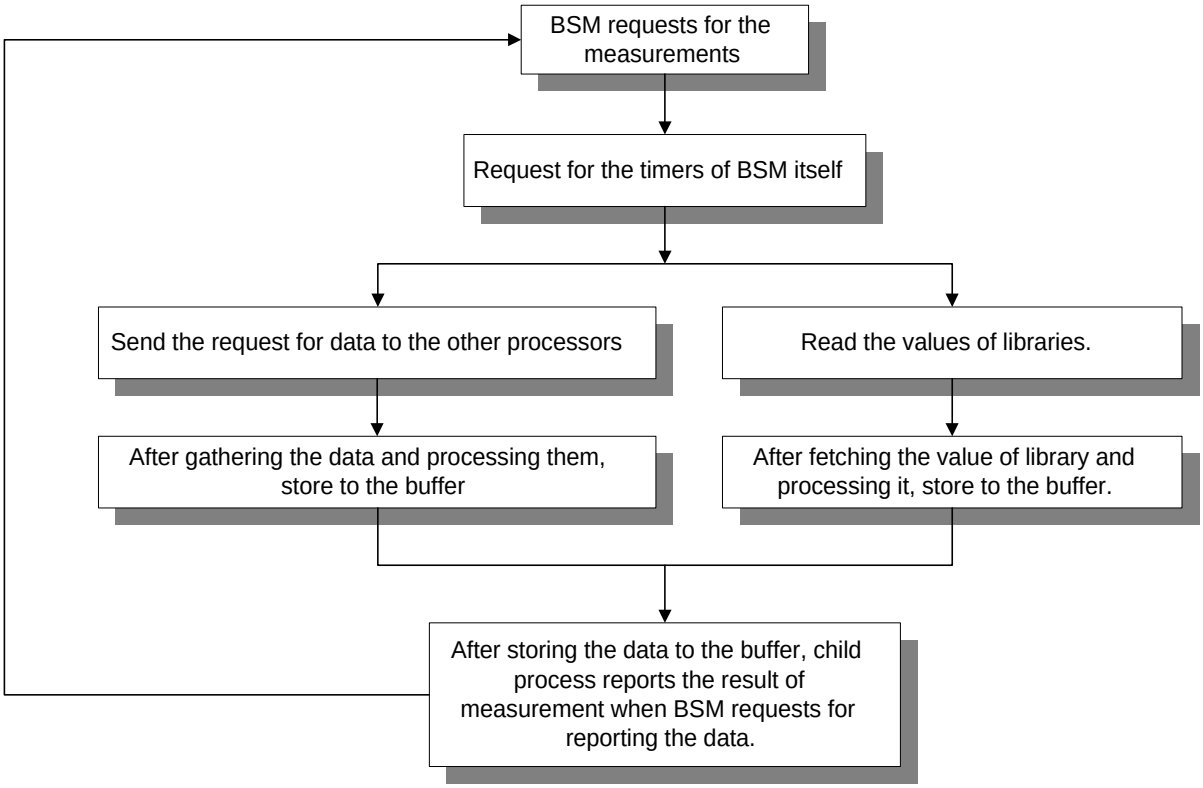

Figure 3.61 Start-up flow of measurement and statistics

(2) Configuration of measurement and statistics

1) Statistics of Traffics

2) Statistics of Hand-offs

3) Statistics of Channel elements

4) Statistics of Vocoders

5) Statistics of Processors

6) Statistics of Performances

7) Statistics of CAI

8) Statistics of RFs

9) Statistics of BTS-links

10) Statistics of Faults

11) Statistics of Alarms

12) Statistics of Paging

13) Statistics of RF's performance in BTS.

14) Statistics of Location registrations

15) Statistics of No.7

3.2.3.3 Test for measurement and statistics

(1) Resevation for statistics data.

1) You use the following command to cancel the reservation for the data of statistics.

M6201 STOP-STAT-JOB:BSC=aa,JOB=bb,MPRD=cc;
aa : BSC ID
bb : JOB Number
cc : Measurement Periodic Time

2) If you entered the command, you can see the follows;

- In case of Success

```
M6201 STOP STATISTICS JOBS

ACCEPTED

RESULT = OK
  COMPLETED
```

- In case of Failure

```
M6201 STOP STATISTICS JOBS

NOT ACCEPTED

RESULT = NOK

REASON = DATABASE NOT OPEN – cannot open the Database file

         or INPUT ERROR – input error

         or JOBS NOT FOUND – no report job reserved

         or MPRD NOT FOUND – no Measurement Period inputted

         or JOB_ID ERROR – JOB ID error

         or MATCHING JOB NOT FOUND – no report JOB respond to input value

COMPLETED
```

3) You use the following command to cancel the reservation for the data of statistics

```
M6001 DIS-STAT-JOB:bsc=bsc;
bsc : BSC ID
```

4) If you entered the command, you can see the follows;

- In case of Success

```
M6001 DISPLAY STATISTICS JOBS
BSC = bsc_id
SUB_ID  JOB_NO   STAT_ITEM    START_TIME    MPRD  MTIM  ITER
   aa      bb          cc            dd          ee    ff    gg
...
RESULT = OK
COMPLETED

  aa       :  SUB ID
  bb       :  JOB Registration Number
  cc       :  JOB Statistics Item
  dd       :  Measurement Start Time
  ee       :  Measurement Period
  ff       :  Measurement Times
  gg       :  Execution Times
```

- In case of Failure

```
M6001 DISPLAY STATISTICS JOBS
NOT ACCEPTED
RESULT = NOK
REASON = Fail Reasons*
COMPLETED

REASON = BSC NOT EQUIPPED – The entered BSC is not equipped.
         or NO JOBS PLANNED – There is not reserved ststistics JOB.
         or BSC_ID NOT ENTERED – Input Error for not entered BSC.
```

(2) Statistics of traffic

There are three types of the measurement and statistics of traffic according to origination call, termination call, and both of all.

1) You use the following command to start up the traffic command.

C6102 STRT-STAT-TRAF:[BSC=a,[BCP=b,]]ITEM=c,MPRD=d,MTIM=e;

a : BSC ID (0 ~ 6)

b : BCP ID (0 ~ 5)

c : Statistics of Traffic ITEM (ORG|TER|ALL)

d : Measurement Periodical Time (MIN10|HALF|HOUR)

e: Measurement Times (1 ~ 50)

System displays the "ACCEPTED" message.

- Gathering the data of statistics starts the absolute time on 10, 20, 30, 40, 50, and 00 .

2) As soon as the operators request statistics, the data of statistics are accumulated. Whenever the given periodic time (relative time 10, 30 and 60 minutes) is returned, these data displays the following message within 10 minutes every hour.

```
 M6102 STATISTICS ON CALL TRAFFIC
ITEM = TRAF_ORG
DATE = YY-MM-DD HH:MM ~ HH:MM
BSC_ID = aa
BTS   FA  SEC   ATTEMPT  CAL_PROC   SEIZURE    ALERT    ANSWER  AVG_HOLD  TRAF_USG
                    BCP_OVLD  CCP_OVLD  TCE_UNAV   TC_FULL   WC_UNAV  PWR_UNAV  C_ASN_FL
                     VOC_ERR  VOC_BUSY  VOC_UNAV  T_SYN_TO  M_ACQ_FL   SO_REJCT  S_SI_LNK
          S_BAD_FR  S_NO_FRM   S_TFC_FL   S_DB_FL  T_BCP_TO   B_CCP_TO  P_TSB_TO
          C_TSB_TO   C_PCX_TO   CTRL_TO  RSC_CONG  TRK_BUSY   SIG_ERR  NO_ANSWR
           S_T_REL     LR_TO  UNAV_USR  UNAV_NUM  USR_BUSY   NO_RESP  REL_CALL
         S_PWR_DN   BLINK_FL   BSC_FLT   PCX_FLT   PCX_REL  REL_TRAF  PWR_DOWN
          SI_LNKFL  TFC_DOWN   BAD_FRM   DELAY_ms    A_TRAF_%  A_SUCC_%
 bb   c   d        x        x        x        x        x        x        x
               x        x        x        x        x        x        x
               x        x        x        x        x        x        x
               x        x        x        x        x        x        x
               x        x        x        x        x        x        x
               x        x        x        x        x        x        x
               x        x        x        x        x        x        x
               x        x        x        x
 ...
RESULT = OK
COMPLETED

M6102 STATISTICS ON CALL TRAFFIC
ITEM = TRAF_TER
DATE = YY-MM-DD HH:MM ~ HH:MM
BSC_ID = aa
BTS   FA  SEC  ATTEMPT  CAL_PROC   SEIZURE     ALERT    ANSWER  AVG_HOLD  TRAF_USG
          BCP_OVLD  CCP_OVLD  TCE_UNAV   TC_FULL   WC_UNAV  PWR_UNAV  C_ASN_FL
          VOC_ERR  VOC_BUSY  VOC_UNAV  T_SYN_TO  M_ACQ_FL   SO_REJCT   S_SI_LNK
```

```
          S_BAD_FR   S_NO_FRM   S_TFC_FL    S_DB_FL  T_BCP_TO   B_CCP_TO   P_TSB_TO
           C_TSB_TO  C_PCX_TO   CTRL_TO  RSC_CONG  TRK_BUSY    SIG_ERR  NO_ANSWR
          S_PWR_DN   BLINK_FL   BSC_FLT     PCX_FLT   PCX_REL  REL_TRAF  PWR_DOWN
           SI_LNKFL  TFC_DOWN  BAD_FRM   DELAY_ms     A_TRAF_%  A_SUCC_%
 bb   c   d        x         x         x         x         x         x         x
                 x         x         x         x         x         x         x
                 x         x         x         x         x         x         x
                 x         x         x         x         x         x         x
                 x         x         x         x         x         x         x
                 x         x         x         x         x         x         x
                 x         x         x         x
 ...
 RESULT = OK
COMPLETED
      aa   :   BSC ID
       bb   :   BCP ID
       c    :   FA ID
      d    :   SECTOR ID
```

3) Analysis on the parameters of output message

The following parameters of statistics of traffic are related with origination calls.

Items	Contents
ATTEMPT	The number of attempting the originated calls using access channel in MS. • On receiving the message of Msg_Mob_Orig_Bc, this parameter is counted
SEIZURE	The number of successful link between mobile station and vocoder • On receiving the message of Msg_Conect_sc, this parameter is counted.
CAL_PROC	The number of processing normal origination call in PCX • When mobile station is requested to the origination call set-up to PCX and receives the ACK, this parameter is counted.
ALERT	The number of ring transmitted for the response of terminated call. • When the message of Alert is received, this parameter is counted.
ANSWER	The number of normal call for the response of termination call

TRAF_USG	The rate of possessing channel of origination call (The count form of certification : In case of the statistics of hourly time, the result is the following. (ATT_HOLD*ATTEMPT)/3600)
AVG_HOLD	he total possession time of channel
NORM_REL	On maintaining a call, this parameter represents to being released by the part of origination (Release a call of M/M or M/L calls from the origination)
PCX_REL	On maintaining a call, this parameter represents to being released by the part of termination (Release a call of M/M or M/L calls from the part of MS or Land)
PWR_DOWN	The number of released calls by the power down of MS in normal calls
BAD_FRM	The number of released call by the data burst error due to the bad radio environment in a call.
SI_LNKFL	The number of cut-off calls due to the SI link fail in a call
TFC_DOWN	The number of cut-off calls by TFC down during a call
SET_REL	The number of released calls by the user of origination part before answering for a call during the call set-up (The number of canceling calls)
P_TSB_TO	The number of released calls for not arriving to the control message in time from MS during a call
M_ACQ_FL	In case of TCE failing to obtain the set-up data of communication channels from mobile station, a call is released
T_SYNC_TO	In setting up TC link between TCE and TSB, this parameter represents that Time Sync message does not arrive in the vocoder.
T_BCP_TO	When the control signal of the origination call between TCE and BCP is not arrived in vocoder on time, this parameter is counted for the number of abnormal released call.
B_CCP_TO	When the control signal of the origination call between BCP and CCP is not arrived in vocoder on time, this parameter is counted for the number of abnormal released call.
SO_REJCT	Release the call for not processing the service option of MS.
VOC_ERR	The fail of origination call for the error of vocoder initialization.

TCE_UNAV	If the resources of TCE are not able to assign them to the call or they remain the reserved channels for hand-offs on receiving the message of MobOrg, this parameter is used.
WC_UNAV	The number of the failure of origination call which is unable to assign Walsh Code channel for TC. That is, this is a bad channel of CDMA.
PWR_UNAV	If there is no TC total power assigned for BTS, which is overloaded to the BTS, this parameter is counted.
S_SI_LNK	The number of released call for SI_LINK_FAIL on setting up a call
S_BAD_FR	In case of producing a lot of bad data or losing much voice data for producing a lot of bad data or voice data loss by the bad environment of radio, this parameter is used to count for the number of released calls.
DB_SL_FL	The failure of origination call due to "DB Selection Fail" on a call setup.
S_NO_FRM	The number of released calls due to "NO FRAME" on a call setup
S_TFC_FL	The failure of origination call due to "TFC Down" on a call setup.
VOC_UNAV	If the system cannot assign the available resources to the call, this parameter is used on receiving the normal originated call setup messages from BCP.
BCP_OVLD	The failure of the originated call due to being overloaded on the processor of BCP
CCP_OVLD	The failure of originated call due to being overloaded on the processor of CCP.
C_TSB_TO	After the CCP sends the indication message of setting up TC link to TSB, if the CCP does not receive any response messages from TSB, this parameter is used.
BSC_FLT	The failure of originated call due to the other faults of BSC.
C_PCX_TO	This parameter is used not to receive the message of making progress the call for the request of call setup from the PCX within 5 seconds. Also, it is used not to receive the messages of terminated ring from PCX within 20 seconds.
NO_ANSWR	This parameter indicates that the "Connect" message is not arrived in vocoder in one minute, after receiving the "Alert" message.

BLINK_FL	This parameter indicates that the call setup fails due to being overloaded on CCP-BCP link, B-link and switching over the link.
USR_BUSY	This parameter indicates the busy state of subscriber of terminated call.
NO_RESP	The number of released calls for the no response of first and second paging on the part of termination.
LR_TO	The number of released calls because the response of VLR or HLR is not arrived in time on setting up a originated call.
UNAV_USR	The number of released calls because the originated subscribers has no authorization on setting up a originated call(No registration or the inhibition of originated call)
UNAV_NUM	The number of released calls because the terminated call is not able to connect to the termination as a result of translating the number of termination on a call setup.
RSC_CONG	The number of released calls due to being overloaded on the switch of PCX on a originated call setup
TRK_BUSY	The number of released calls due to being lack of the trunks of PCX in setting up a originated call.
SIG_ERR	The number of released call due to being a signaling error of R2 or No7 in setting up a originated call.
PCX_FLT	This parameter is indicates the failure of originated call due to the other faults of PCX. After CCP sends the message of "setup_cx" to PCX, CCP receives the message of "Connection refused" due to no registration, alarm, or failure of DB.
DELAY_ms	The average delay time from call attempt to service
A_TRAF_%	Call originated traffic rate
A_SUCC_%	Call originated success rate

These parameters are related to the statistics of termination call's traffic.

Items	Contents
ATTEMPT	This parameter indicates MS uses the access channel to attempt the terminated call. It is counted on responding to paging.
SEIZURE	The number of setting TC link up between MS and vocoder

CAL_PROC	The number of the normal terminated call on PCX.
ALERT	The number of transmitting to RBT of the subscriber of termination.
ANSWER	The number of responding the calls from the terminated subscribers.
TRAF_USG	The rate of the channel possession of the terminated calls
AVG_HOLD	The interval time(second) of the channel possession of the terminated calls.
NORM_REL	In case of releasing a call from termination on it.
PCX_REL	In case of releasing a call from origination on it.
PWR_DOWN	The number of calls released by the power down of MS in the normal call.
BAD_FRM	The number of released call when detecting on the bad frame in the TSB on a call.
SI_LNKFL	The number of cut-off calls due to the error of "SI Link Fail" on a call
TFC_DOWN	The number of cut-off calls by the error of "TFC Down" in a call.
P_TSB_TO	If the control message is not arrived in time from MS on setting up a call, this parameter is used.
M_ACQ_FL	When MS sends the message of setting the traffic channel to TCE, in case of not obtaining the TCE, the call is canceled.
T_SYNC_TO	When the TC link between TCE and TSB is set up, this parameter indicates that "Time Sync Message" is not arrived in time.
T_BCP_TO	The number of calls released in the terminated call setup for the control messages between TCE and BCP is not arrived on time
B_CCP_TO	The number of calls released in the terminated call setup for the control messages between BCP and CCP is not arrived on time
SO_REJCT	The number of calls released due to being unable to process the service options of MS.
VOC_ERR	The number of failures for the terminated calls due to the failure of vocoder initialization in setting up a call.
TCE_UNAV	In case of no resources of TCE on receiving the message of "Page response" or in case of remaining the only reserved channel for handoff, this parameter indicates not to assign the resources for a call.

WC_UNAV	The failure of terminated call due to being unable to assign Walsh code channel
PWR_UNAV	The failure of terminated call for lack of assigned power of BTS
S_SI_LNK	The number of calls released because of SI_LINK_FAIL on a call setup
S_BAD_FR	In case of producing a lot of bad data or losing much voice data by the bad environment of radio, this parameter is used to count for the number of calls released or the number of SI link failures in a call setup.
DB_SL_FL	The failure of originated call due to the failure of DB selection in a call setup
S_NO_FRM	The number of calls released due to "No Frame" in setting a call up.
S_TFC_FL	The failure of originated call due to "TFC down" in setting a call up
VOC_UNAV	The failure of terminated call for lack of the resources of vocoder
BCP_OVLD	The failure of terminated call due to overloaded on BCP.
CCP_OVLD	The failure of terminated call due to overloaded on CCP.
C_TSB_TO	After the CCP sends the indication message of setting up TC link to TSB, if the CCP does not receive any response messages from TSB, this parameter is used.
BSC_FLT	The failure of originated call due to the other faults of BSC
C_PCX_TO	If the message of making progress a call, Call Conf, is not received from PCX for the response of paging within 5 seconds, this parameter is used.
NO_ANSWR	The number of failures due to no response from terminated subscribers in the terminated call setup.
BLINK_FL	The deadlock or cut-off of B-links
RSC_CONG	Failure of terminated call for lack of the resources of switches and trunks
SIG_ERR	The number of calls released due to the error of R2 and No.7 in setting up the terminated call
PCX_FLT	Failure of Originated call due to the other faults of PCX
DELAY_ms	The average delay time from call attempt to service
A_TRAF_%	Call originated traffic rate

A_SUCC_%	Call originated success rate

(3) Statistics of Hand-off

There are three types of measurement and statistics : softer, soft, and Hard hand-off. Hard hand-off has three types : Intra-HHO, Inter-HHO, and Intra-Cell.

1) You use the following command to start the statistics of hand-off.

```
C6103 STRT-STAT-HDOF:[BSC=a,[BCP=b,]]ITEM=c,MPRD=d,MTIM=e;
a : BSC Id (0 ~ 6)
b : BCP Id (0 ~ 5)
c : Statistic item of Handoff (HHO|SHO|RHO|ALL)
d : Measurement Period (MIN10|HALF|HOUR)
e : Measurement Times (1 ~ 50)
```

System displays the "ACCEPTED" message.

- Gathering the data of statistics starts the absolute time on 10, 20, 30, 40, 50, and 00 .

2) As soon as the operators request statistics, the data of statistics are accumulated. Whenever the given periodic time (relative time 10, 30 and 60 minutes) is returned, these data displays the following message within 10 minutes every hour.

- In case of Softer Handoff

```
M6103 STATISTICS ON HANDOFF
ITEM = HO_SOFTER
DATE = YY-MM-DD HH:MM ~ HH:MM
BSC_ID = aa
BTS_ID  FR_SEC  TO_SEC   ATT_ADD   ATT_DRP   SUC_ADD   SUC_DRP
            CC_UNAV   SYS_FLT  HCM_FAIL  CALL_DRP  A_SUCC_%
bb      c       c       x       x       x       x
                x       x       x       x       x
...
RESULT = OK
COMPLETED
aa : BSC ID
bb : BTS ID
c  : SECTOR ID
```

- In case of Soft Handoff

```
M6103 STATISTICS ON HANDOFF
ITEM = HO_SOFT
DATE = YY-MM-DD HH:MM ~ HH:MM
BSC_ID = aa
FR_BTS  TO_BSC  TO_BTS   ATT_ADD   ATT_DRP   SUC_ADD   SUC_DRP   TC_UNAV
            WC_UNAV   FO_UNAV   SYS_FLT  HCM_FAIL  CALL_DRP
                                  A_SUCC_%
bb      aa      bb        x         x         x         x         x
                    x         x         x         x         x
                                        x
...
RESULT = OK
COMPLETED
aa : BSC ID
bb : BTS ID
```

- In case of HARD HANDOF

```
M6103 STATISTICS ON HANDOFF
ITEM = HO_HARDMSC
DATE = YY-MM-DD HH:MM ~ HH:MM
BSC_ID = aa
FR_BTS  TO_MSC  TO_BSC  TO_BTS   ATTEMPT   FREQ_HO   FRAM_HO   BOTH_HO  NO_CHNGE
                  TC_UNAV   CC_UNAV    FO_UNAV    SYS_FAIL   HCM_FAIL
                     CALL_DRP     A_SUCC_%
bb      cc      aa      bb        x         x         x         x         x
                            x         x         x         x         x
                                                  x
...
RESULT = OK
COMPLETED

M6103 STATISTICS ON HANDOFF
ITEM = HO_HARD
DATE = YY-MM-DD HH:MM ~ HH:MM
BSC_ID = aa
FR_BTS  TO_BSC  TO_BTS   ATTEMPT   SUCCESS   TC_UNAV   CC_UNAV
                  FO_UNAV   SYS_FLT   HCM_FAIL  CALL_DRP  A_SUCC_%
bb      aa      bb        x         x         x         x
                    x         x         x         x
...
```

```
 RESULT = OK
COMPLETED

 aa : BSC ID
 bb : BTS ID
 cc : MSC ID
```

3) Analysis on output parameters

There are tens of parameters of statistics of softer handoff as follows:

Items	Contents
FROM_SEC	The source sector of softer handoff
TO_SEC	The target sector of softer handoff
ATT_ADD	The number of Softer ADD
ATT_DROP	The number of Softer DROP
SUC_ADD	The number of success in Softer ADD handoff
SUC_DROP	The number of success in Softer DROP handoff
CC_UNAV	The number of handoff failures when the Walsh code channel is not used.
SYS_FAIL	The number of handoff failures in the faults of system
HCM_FAIL	The number of released call because of not receiving HCM in the handoff
CALL_DROP	The number of Softer Drops of PS' call in the handoff

The following parameters are related to statistics of soft handoff.

Items	Contents
FROM_BTS	The source number of BTS
TO_BTS	The target number of BTS
ATT_ADD	The number of receiving PSMMs in soft add handoff
ATT_DROP	The number of receiving PSMMs in soft drop handoff
SUC_ADD	The number of receiving HCMs in soft add handoff after sending HDMs to MS

SUC_DROP	The number of receiving HCMs in soft drop handoff after sending HDMs to MS
TC_UNAV	The number of failures due to being unable to use TCs
WC_UNAV	The number of failures due to being unable to use Walsh code channels
SYS_FAIL	The number of handoff failures in the faults of system.
FO_UNAV	The number of failures due to being unable to use or assign frame offset
HCM_FAIL	The number of released calls due to not receiving HCM
CALL_DROP	The number of calls dropped by the MS in being handoff
A_SUCC_%	Call originated success rate

The following parameters are related to statistics of hard handoff.

Items	Contents
FROM_BTS	The source number of BTS
TO_BTS	The target number of BTS
ATTEMPT	The number of decisions on Inter Cell by frequency HHO
SUC_FO	The number of Handoff by changing Frame Offset
SUC_FA	The number of Handoff by changing Frequency
SUC_BOTH	The number of successful Handoffs by changing Frequency or Frame Offset
SUC_NO_CHG	The number of successful Handoffs by not changing Frequency or Frame Offset (Only Handoff between PCXs)
TC_UNAV	The number of failures due to being unable to use TC
CC_UNAV	The number of failures due to being unable to use the Walsh code channel
SYS_FAIL	The number of handoff failures in the faults of system.
FO_UNAV	The number of failures due to being unable to use the frame offset
HCM_FAIL	The number of released calls due to not receiving HCM
CALL_DROP	The number of calls dropped by the MS in being handoff
A_SUCC_%	Call originated success rate

(4) Statistics of Channel Elements

This statistics are measured by sector of BTS.

1) Using the following command, you can start to the statistics of the channel elements.

```
C6104 STRT-STAT-CE:[BSC=a,[BCP=b,]]MPRD=c,MTIM=d;
a : BSC ID ( 0 - 6 )
b : BCP ID ( 0 - 5 )
c : Channel Element Statistic ITEM ( ACE/PCE/TCE/ALL)
d : Measurement Periodical Time ( MIN10/HALF/HOUR )
e : Measurement Times ( 1 - 50 )
```

System displays the "ACCEPTED" message.

- Gathering the data of statistics starts the absolute time on 10, 20, 30, 40, 50, and 00.

2) As soon as the operators request statistics, the data of statistics are accumulated. Whenever the given periodic time (relative time 10, 30 and 60 minutes) is returned, these data displays the following message within 10 minutes every hour.

```
M6104 STATISTICS ON CHANNEL ELEMENT
   ITEM = CE_ACCESS
   DATE = YY-MM-DD HH:MM ~ HH:MM
   BSC_ID = aa
   BTS   FA  AC_EQUIP  AC_MX_LD  AC_M_CNT  AC_LD_RT

    bb    c         x         x         x         x

   ...
   RESULT = OK
COMPLETED

M6104 STATISTICS ON CHANNEL ELEMENT
   ITEM = CE_PAGE
   DATE = YY-MM-DD HH:MM ~ HH:MM
   BSC_ID = aa
   BTS   FA  PC_EQUIP  PC_MX_LD  PC_M_CNT  PC_LD_RT
    bb    c         x         x         x         x

   ...
```

```
    RESULT = OK
  COMPLETED

  M6104 STATISTICS ON CHANNEL ELEMENT
    ITEM = CE_TRAFFIC
    DATE = YY-MM-DD HH:MM ~ HH:MM
    BSC_ID = aa
    BTS   FA  SEC  TRAF_ATT  TRAF_ASN  TRAF_USG   TRAF_BSY  TRAF_FLT
              HDOF_ATT  HDOF_ASN  HDOF_USG  HDOF_BSY  HDOF_FLT  A_USE_%
     bb    c   d        x         x        x        x        x      xx.x
                    x         x        x        x        x
    ...
    RESULT = OK
COMPLETED
```

aa : BSC ID
bb : BTS ID
c : FA ID
d : SECTOR ID

3) Analysis on the output parameters

There are several parameters of statistics of traffic channels as follows:

Items	Contents
TRAF_ATT	The number of attempts of traffic channels per hour
TRAF_SUC	The number of successful assignment of traffic channels per hour
TRAF_HOLD	The average time(SEC) of possession of traffic channel on traffic
HDOF_ATT	The number of attempts of traffic channels on the handoff per hour
HDOF_SUC	The number of successful assignment of traffic channels on handoff per hour
HDOF_HOLD	The average time(SEC) of possession of traffic channel on handoff
TRAF_BSY	The number of failures per hour due to being busy on traffic channels
TRAF_FLT	The number of failures per hour in the faults on traffic channels
HDOF_BSY	The number of handoff failures per hour due to being busy on traffic channels
HDOF_FLT	The number of handoff failures per hour in the faults on traffic channels
A_USE_%	The average usage ratio (%) of traffic channels per hour

There are several parameters of statistics of paging channels

Items	Contents
AC_EQUIP	The number of access channels equipped
AC_MX_LD	The maximum number of messages to be processed in the access channels
AC_M_CNT	The number of messages actually processed
AC_LD_RT	The number of messages per unit time (second)

There are four output parameters of statistics of paging channels as follows:

Items	Contents
PC_EQUIP	The number of paging channels equipped
PC_MX_LD	The maximum number of messages to be processed in the paging channels
PC_M_CNT	The number of messages actually processed
PC_LD_RT	The number of messages per unit time (second)

(5) Statistics of vocoders

1) Using the following command, you can start to the statistics of vocoders

```
C6105 STRT-BTS-VOC:[BSC=a,[SIP=b,]]MPRD=c,MTIM=d;
a : BSC ID (0 ~ 6)
b : SIP ID (0 ~ 31)
c : Measurement Period (MIN10|HALF|HOUR)
d : Measurement Times (1 ~ 50)
```

System displays the "ACCEPTED" message.

- Gathering the data of statistics starts the absolute time on 10, 20, 30, 40, 50, and 00.

2) As soon as the operators request statistics, the data of statistics are accumulated. Whenever the given periodic time (relative time 10, 30 and 60 minutes) is returned, these data displays the following message within 10 minutes every hour.

```
        M6105 STATISTICS ON VOCODER
        ITEM = VOC
        DATE = YY-MM-DD HH:MM ~ HH:MM
        BSC_ID = aa
        SIP_ID  SVP_ID   TX_A_B_R   RX_A_B_R   DURATION   LOAD_DSP   TOTAL_FRM
                        FRM_B_ERR  FRM_DELAY  FRM_ERR_%  BIT_ERR_%  FRM_DLY_%
  bb    cc        x         x         x         x         x
                x         x         x         x         x
  ...
  RESULT = OK
COMPLETED
  aa   : BSC ID
  bb   : SIP ID
  cc   : SVP ID
```

3) Analysis on the output parameters

There are some parameters of statistic of vocoder (Tx/Rx) as follow:

Items	Contents
TX_BIT_RATE	The average bit rate for sended frame (12.5 - 100%)
RX_BIT_RATE	The average bit rate for received frame (12.5 - 100%)
AVG_LOAD_DSP	The average load per a DSP (0 - 100%) : (AVG_DUR_TIME*100)/600
AVG_DUR_TIME	The average call state time (sec) : TOT_FRAME/(MAX_SVE_PER_SVP*50)
FRAME_DELAY	The number of frame that don't receive from TCE each 20ms
FRM_B_BER	The number of frame received from TCE having CRC or other errors
TOT_FRAME	Total frame count
AVG_FRM_ERR	The average error frame to received frame (0 - 100%) : (FRM_B_ERR+FRM_DELAY)*100/TOT_FRAME
AVG_BIT_ERR	The average error bit to received error frame (0 - 100%) : (FRM_B_ERR*100/(FRM_B_ERR+FRM_DELAY)
FRM_DLY_RATE	The average delay to received error frame (0 - 100%) : (FRM_B_ERR*100/(FRM_B_ERR+FRM_DELAY)

(6) Statistics of Processors

1) Using the following command, you can start to the statistics of processors.

```
C6108 STRT-STAT-PRC : [BSC=a,][BCP=b,|SIP=c,|CSB=d,|SRC=e]ITEM=f,MPRD=g,MTIM=h;
```

a : BSC ID (0 ~ 6)

b : BCP ID (0 ~ 5)

c : SIP ID (0 ~ 31)

d : CSB ID(0 ~11)

e : SRC ID(0 ~ 31)

f : Processor Statistics Item (CCP|BCP|SIP|CSB|SRC|ALL)

g : Measurement Period (MIN10|HALF|HOUR)

h : Measurement Times (1 ~ 50)

System displays the "ACCEPTED" message.

- Gathering the data of statistics starts the absolute time on 10, 20, 30, 40, 50, and 00.

2) As soon as the operators request statistics, the data of statistics are accumulated. Whenever the given periodic time (relative time 10, 30 and 60 minutes) is returned, these data displays the following message within 10 minutes every hour.

- In case of CCP

```
M6108 STATISTICS ON PROCESSOR LOAD
ITEM = PRC_CCP
DATE = YY-MM-DD HH:MM ~ HH:MM
BSC_ID = aa
IDLE   IN_IPCC  IN_IPCQ  MEM_USE
x.xx     x       x         x
RESULT = OK
COMPLETED
```

- In case of BCP

```
M6108 STATISTICS ON PROCESSOR LOAD
ITEM = PRC_BCP
DATE = YY-MM-DD HH:MM ~ HH:MM
BSC_ID = aa
BCP_ID    IDLE    IIPCC    IIPCQ    OIPCC    OIPCQ
  bb      x.xx      x       x        x        x
...
RESULT = OK
COMPLETED
```

- In case of SIP

```
M6108 STATISTICS ON PROCESSOR LOAD
ITEM = PRC_SIP
DATE = YY-MM-DD HH:MM ~ HH:MM
BSC_ID = aa
SIP_ID    IDLE    IIPCC    IIPCQ    OIPCC    OIPCQ
Cc     x.xx      x      x       x      x
...
RESULT = OK
COMPLETED
aa : BSC ID
bb : BCP ID
cc : SIP ID
```

- In case of BCP

```
M6108 STATISTICS ON PROCESSOR LOAD
ITEM = PRC_CSB
DATE = YY-MM-DD HH:MM ~ HH:MM
BSC_ID = aa
IDLE    IIPCC    IIPCQ    OIPCC    OIPCQ
x.xx       x        x         x        x
...
RESULT = OK
COMPLETED

aa : BSC ID
```

- In case of SRC

```
M6108 STATISTICS ON PROCESSOR LOAD
ITEM = PRC_SRC
DATE = YY-MM-DD HH:MM ~ HH:MM
BSC_ID = aa
CELL    FA_ID    IDLE    IIPCC    IIPCQ    OIPCC    OIPCQ
  bb      cc      x.xx       x        x         x        x
...
RESULT = OK
COMPLETED
```

```
aa : BSC ID
bb : CELL ID
cc : FA ID
```

3) Analysis on the output parameters

There are several output parameters of statistics of processors as follow:

Items	Contents
IDLE	The average load of processors
IIPCC	Input IPC Count (the number of Rx IPCc)
OIPCC	Output IPC Count (the number of Tx IPCs)
IIPCQ	Input IPC Quantity (the quantity of Rx IPC)
OIPCQ	Output IPC Quantity (the quantity of Tx IPC)
IN_IPCC	The number of incoming IPCs in the CCP (only CCP)
IN_IPCQ	The quantity of incoming IPCs in the CCP (only CCP)
MEM_USG	CCP Processor Memory Usage Rate (only CCP)

(6) Statistics of the performance of BTS

1) Using the following command, you can start to the statistics of the performance of BTS.

```
C6111 STRT-STAT-PERF : [BSC=a,[BCP=b,]]MPRD=c,MTIM=d;
a : BSC ID (0 ~ 6)
b : BCP ID (0 ~ 5)
c : Measurement Period (MIN10|HALF|HOUR)
d : Measurement Times (1 ~ 50)
```

System displays the "ACCEPTED" message.

- Gathering the data of statistics starts the absolute time on 10, 20, 30, 40, 50, and 00.

2) As soon as the operators request statistics, the data of statistics are accumulated.

Whenever the given periodic time (relative time 10, 30 and 60 minutes) is returned, these data displays the following message within 10 minutes every hour.

```
M6111 STATISTICS ON BTS PERFORMANCE
ITEM = PERF
DATE = YY-MM-DD HH:MM ~ HH:MM
BSC_ID = aa
BTS_ID  O_LT100  O_LT200  O_LT300  O_LT400  O_LT500  O_LT600   O_LT700  O_GT700
T_LT400   T_LT500  T_LT600  T_LT700  T_LT800  T_LT900   T_LT1000  T_GT1000
bb        x        x        x        x        x        x        x        x
          x        x        x        x        x        x        x        x
...
RESULT = OK
COMPLETED
aa : BSC ID
bb : BCP ID
```

3) Analysis on the output parameters

The following parameters are related to statistics of the performance of BTS.

Items	Contents
O_LT_100	From the view of BTS, this parameter indicates that the completion time of originated call setup is less than100ms
O_LT_200	From the view of BTS, this parameter indicates that the completion time of originated call setup is greater than100ms and less than 200ms
O_LT_300	From the view of BTS, this parameter indicates that the completion time of originated call setup is greater than200ms and less than 300ms
O_LT_400	From the view of BTS, this parameter indicates that the completion time of originated call setup is greater than300ms and less than 400ms
O_LT_500	From the view of BTS, this parameter indicates that the completion time of originated call setup is greater than 400ms and less than 500ms

O_LT_600	From the view of BTS, this parameter indicates that the completion time of originated call setup is greater than 500ms and less than 600ms
O_LT_700	From the view of BTS, this parameter indicates that the completion time of originated call setup is greater than 600ms and less than 700ms
O_GT_700	From the view of BTS, this parameter indicates that the completion time of originated call setup is greater than700ms
T_LT_400	From the view of BTS, this parameter indicates that the completion time of terminated call setup is less than 400ms
T_LT_500	From the view of BTS, this parameter indicates that the completion time of terminated call setup is greater than 400ms and less than 500ms
T_LT_600	From the view of BTS, this parameter indicates that the completion time of terminated call setup is greater than 500ms and less than 600ms
T_LT_700	From the view of BTS, this parameter indicates that the completion time of terminated call setup is greater than 600ms and less than 700ms
T_LT_800	From the view of BTS, this parameter indicates that the completion time of terminated call setup is greater than 700ms and less than 800ms
T_LT_900	From the view of BTS, this parameter indicates that the completion time of terminated call setup is greater than 800ms and less than 900ms
T_LT_1000	From the view of BTS, this parameter indicates that the completion time of terminated call setup is greater than 900ms and less than 1000ms
T_GT_1000	From the view of BTS, this parameter indicates that the completion time of terminated call setup is greater than 1000ms

(7) Statistics of CAI signaling

1) Using the following command, you can start to the statistics of CAI signaling.

C6118 STRT-STAT-CAI : [BSC=a,[BCP=b,]]MPRD=c,MTIM=d;

a : BSC ID (0 ~ 11)

b : BCP ID (0 ~ 31)

c : Report Item (BCP|TSB|ALL)

d : Measurement Period (MIN10|HALF|HOUR)

e : Measurement Times (1 ~ 50)

System displays the "ACCEPTED" message.

- Gathering the data of statistics starts the absolute time on 10, 20, 30, 40, 50, and 00

2) As soon as the operators request statistics, the data of statistics are accumulated. Whenever the given periodic time (relative time 10, 30 and 60 minutes) is returned, these data displays the following message within 10 minutes every hour.

```
M6118 STATISTICS ON CAI SIGNALLING
ITEM = CAI
DATE = YY-MM-DD HH:MM ~ HH:MM
BSC_ID = aa
BTS_ID  SEC_ID  PC_EQUIP  PC_PAGING   P C_ORDER  PC_CH_ASGN  PC_DAT_BST  PC_SER_RDR
        AC_EQUIP AC_MOB_ORG  AC_REGIST AC_MOB_ORD  AC_PAG_RSP  AC_DAT_BST
bb    cc        x        x       x        x        x        x
            x        x       x        x        x        x
...
RESULT = OK
COMPLETED
```

```
M6118 STATISTICS ON CAI SIGNALLING
ITEM = TSB_CAI
DATE = YY-MM-DD HH:MM ~ HH:MM
BSC_ID = aa
CELL  SEC_ID  FA_ID  RCV_ORDER   RCV_PSMM   RCV_PMRM   RCV_DTMF   RCV_SVC_CON   RCV_HDOF
                       SND_ORDER   SND_ALRT   SND_NBOR   SND_HDOF   SND_SVC_CON
  bb      cc     dd         x           x           x            x              x
x
                            x           x           x            x              x
...
```

```
RESULT = OK
COMPLETED

aa : BSC ID
bb : CELL ID
cc : SECTOR ID
dd : FA_ID
```

3) Analysis on the output parameters

-. The following parameters are related to statistics of CAI (Common Air Interface) signaling.

Items	Contents
PC_TOTAL	The number of messages of all of the paging channels to be sent
PC_PAGING	The number of messages of "General page Message" to be sent
PC_ORDER	The number of messages of order to be sent
PC_CH_ASGN	The number of messages of "Channel Assign" to be sent
PC_DAT_BST	The number of data burst messages transmitted to the paging channel.
PC_SER_RDR	The number of the message of service redirection message using paging channel.
AC_TOTAL	The number of the message transmitted to all of access channels
AC_MOB_ORG	The number of the messages of origin transmitted to the access channel
AC_REGIST	The number of the transmitted messages of registration using access channel
AC_MOB_ORD	The number of the transmitted messages of orders using the access channel
AC_PAG_RSP	The number of the transmitted messages of paging response using the access channel
AC_DAT_BST	The number of the data burst message transmitted to the access channel

-. The following parameters are related to statistics of TSB CAI signaling.

Items	Contents
RCV_ORDER	MS ACK Order, Release Order, Continous DTMF Order, etc.
RCV_PSMM	MS sends the messages measured Pilot to BS (ex., Pilot strength)
RCV_PMRM	MS sends the messages taken a statistics of forward link frame error to BS
RCV_DTMF	MS sends the messages taken information when touchs the keypad to BS
RCV_SVC_CON	The response of "Service Connect Message". Start its service.
RCV_HDOF	The complete report message updated for "Handoff Direction"
SND_ORDER	BS Ack Order, Release Order, Pilot Mesurement Request Order, etc.
SND_ALRT	Tone Off, Long Tone, RingBackTone On, etc.
SND_NBOR	Update the information of MS neighbor Pilot when MS does "Handoff"
SND_HDOF	Handoff Update Pilot Information message
SND_SVC_CON	Allow the requested service (option)

(8) Statistics of RFs

1) You can start to the statistics of RF using the following command.

```
C6107 STRT-STAT-RF:[BSC=a,[BCPS=b,]]MPRD=c,MTIM=d;
a : BSC ID (0 ~ 6)
b : BCP ID (0 ~ 5)
c : Measurement Period (MIN10|HALF|HOUR)
d : Measurement Times (1 ~ 50)
```

System displays the "ACCEPTED" message.

- Gathering the data of statistics starts the absolute time on 10, 20, 30, 40, 50, and 00

2) As soon as the operators request statistics, the data of statistics are accumulated. Whenever the given periodic time (relative time 10, 30 and 60 minutes) is returned, these data displays the following message within 10 minutes every hour.

```
M6107 STATISTICS ON BTS CHANNEL QUALITY
ITEM = RF
```

```
    DATE = YY-MM-DD HH:MM ~ HH:MM
    BSC_ID = aa
    BTS_ID  SEC_ID  AFWD_GAIN  ARVS_GAIN  OVF_FG_CNT
      bb      c        x          x          x
  ...
RESULT = OK
COMPLETED
 aa : BSC ID
 bb : BCP ID
c  : SECTOR ID
```

3) Analysis on the output parameters

The following parameters are related to statistics of radio frequency quality.

Items	Contents
AFWD_GAIN	The average value of Tx gain of the forward channel for the forward power control
ARVS_GAIN	The average value of threshold of reverse channel for the reverse power control
OVF_FG_CNT	The number of the arrived message of PMRM in spite of exceeding the threshold of Max Tx Gain already for the forward power control.

(9) Statistics of B-link

1) Using the following command, you can start to the statistics of B link

```
    C6106 STRT-STAT-LINK:[BSC=a,[BCP=b,]]MPRD=c,MTIM=d;
a : BSC ID (0 ~ 6)
b : BCP ID (0 ~ 5)
c : Measurement Period (MIN10|HALF|HOUR)
d : Measurement Times (1 ~ 50)
```

System displays the "ACCEPTED" message.

- Gathering the data of statistics starts the absolute time on 10, 20, 30, 40, 50, and 00

2) As soon as the operators request statistics, the data of statistics are accumulated.

Whenever the given periodic time (relative time 10, 30 and 60 minutes) is returned, these data displays the following message within 10 minutes every hour.

```
M6106 STATISTICS ON BTS LINK
ITEM = BLINK
DATE = YY-MM-DD HH:MM ~ HH:MM
BSC_ID = aa
CELL LNK_I TYPE   R_TOT_C  R_ERR_C  R_S_F_C  R_SLP_C  R_CRC_C  R_USE_R  R_FER_R
R_BER_R
                    T_TOT_C  T_ERR_C  T_S_F_C  T_SLP_C  T_CRC_C  T_USE_R  T_FER_R
T_BER_R
  bb    cc    dd        x        x         x         x          x        x          x
x
                         x        x         x         x          x        x
x         x
RESULT = OK
COMPLETED

aa   : BSC ID
bb   : CELL ID
cc   : LINK ID
dd   : LINK TYPE (E1/T1)
```

3) Analysis of the output parameters

The following parameters are related to statistics of BSC-BTS links (Tx/Rx).

Items	Contents
TYPE	Type of links (E1/T1)
USE_R	The average rate of the usage of links
A_FER	Average Frame Error Rate (= (Error Frame Count / Total Frame Count) * 100)
FER_R	The ratio of HDLC error of the Frame error
BET_R	Bit Error Rate (10^{-3} - 10^{-9})
TOT_C	Total Frame Count

ERR_C	Error Frame Count
SLP_C	Slip Count
CRC_C	CRC Count

(10) Statistics of Faults

1) Using the following command, you can start to the statistics of faults.

```
C6109 STRT-STAT-FLT : [BSC=a,[BCP=b,]
            ITEM=c,MPRD=d,MTIM=e ;
a : BSC ID (0 ~ 6)
b : BCP ID (0 ~ 5)
c : Fault Statistics Item
d : Measurement Period (MIN10|HALF|HOUR)
e : Measurement Times (1 ~ 50)
```

System displays the "ACCEPTED" message.

- Gathering the data of statistics starts the absolute time on 10, 20, 30, 40, 50, and 00

2) As soon as the operators request statistics, the data of statistics are accumulated. Whenever the given periodic time (relative time 10, 30 and 60 minutes) is returned, these data displays the following message within 10 minutes every hour.

- In case of BSC

```
M6109 STATISTICS ON FAULT
ITEM = FLT (BSC)
DATE = YY-MM-DD HH:MM ~ HH:MM
BSC_ID = aa
CODE   PWR   PBA   PRO   CE   OS   LNK   PLL   CLK   CBL   OOS   ENV
 Fxxxx   x    x    x    x    x    x    x    x    x    x    x
...
TOTAL = x
RESULT = OK
COMPLETED
```

- In case of BTS

```
M6109 STATISTICS ON FAULT
ITEM = FLT (BTS)
DATE = YY-MM-DD HH:MM ~ HH:MM
BSC_ID = aa
BTS   CODE   PWR   PBA   PRO   CE    OS   LNK   PLL   CLK   CBL   OOS   ENV
 bb   Fxxxx    x     x     x     x     x     x     x     x     x     x     x
...
TOTAL = x
RESULT = OK
COMPLETED
aa   : BSC ID
bb   : BCP ID
```

3) Analysis on the output parameters

The following parameters are related to statistics of faults.

Items	Contents
PWR	The number of the occurrences of faults related to the power
PBA	The number of the occurrences of faults related to the PBA boards
PRO	The number of the occurrences of faults related to processors
CE	The number of the occurrences of faults related to channel elements
OS	The number of the occurrences of faults related to OS
LNK	The number of the occurrences of faults related to the links
PLL	The number of the occurrences of faults related to PLLs
CLK	The number of the occurrences of faults related to clocks
CBL	The number of the occurrences of faults related to cables
OOS	The number of the occurrences of faults related to out-of-services
ENV	The number of the occurrences of faults related to the environment

(11) Statistics of Alarms

1) Using the following command, you can start to the statistics of alarms.

```
C6110 STRT-STAT-ALM : [BSC=a,[BCP=b,]]ITEM=c,MPRD=d,MTIM=e ;
a : BSC ID (0 ~ 6)
b : BCP ID (0 ~ 5)
c : Alarm Statistics Item
d : Measurement Period (MIN10|HALF|HOUR)
e : Measurement Times (1 ~ 50)
```

System displays the "ACCEPTED" message.

- Gathering the data of statistics starts the absolute time on 10, 20, 30, 40, 50, and 00.

2) As soon as the operators request statistics, the data of statistics are accumulated. Whenever the given periodic time (relative time 10, 30 and 60 minutes) is returned, these data displays the following message within 10 minutes every hour.

- In case of BSC

```
M6110 STATISTICS ON ALARM
ITEM = ALM (BSC)
DATE = YY-MM-DD HH:MM ~ HH:MM
BSC_ID = aa
CODE   PWR   PBA   PRO   CE   OS   LNK   PLL   CLK   CBL   OOS   ENV
Axxxx   x     x     x     x    x    x     x     x     x     x     x
...
TOTAL = x

ALM_TYPE     TOTAL  CRITICAL    MAJOR    MINOR
H/W ALARM      x       x        x        x
S/W ALARM      x       x        x        x
RESULT = OK
COMPLETED
```

- In case of BTS

```
M6110 STATISTICS ON ALARM
ITEM = ALM (BTS)
DATE = YY-MM-DD HH:MM ~ HH:MM
BSC_ID = aa
BTS   CODE   PWR   PBA   PRO   CE   OS   LNK   PLL   CLK   CBL   OOS   ENV
 bb   Axxxx   x     x     x     x    x    x     x     x     x     x     x
...
TOTAL = x

ALM_TYPE     TOTAL  CRITICAL   MAJOR   MINOR
H/W ALARM      x       x        x       x
S/W ALARM      x       x        x       x
RESULT = OK
COMPLETED
aa : BSC ID
bb : BCP ID
```

3) Analysis on the output parameters

The following parameters are related to statistics of alarms.

Items	Contents
PWR	The number of the occurrences of alarms related to the power
PBA	The number of the occurrences of alarms related to the PBA boards

PRO	The number of the occurrences of alarms related to the processor
CE	The number of the occurrences of alarms related to the channel elements
OS	The number of the occurrences of alarms related to OS
LNK	The number of the occurrences of alarms related to the links
PLL	The number of the occurrences of alarms related to PLL
CLK	The number of the occurrences of alarms related to the clocks
CBL	The number of the occurrences of alarms related to the cables
OOS	The number of the occurrences of alarms related to the out-of-service
ENV	The number of the occurrences of alarms related to the environment

(12) Statistics of Paging

1) Using the following command, you can start to the statistics of paging.

```
C6112 STRT-STAT-PAG : [BSC=a,[BCP=b,]]MPRD=c,MTIM=d;
a : BSC ID (0 ~ 6)
b : BCP ID (0 ~ 5)
d : Measurement Period (MIN10|HALF|HOUR)
e : Measurement Times (1 ~ 50)
```

System displays the "ACCEPTED" message.

- Gathering the data of statistics starts the absolute time on 10, 20, 30, 40, 50, and 00

2) As soon as the operators request statistics, the data of statistics are accumulated. Whenever the given periodic time (relative time 10, 30 and 60 minutes) is returned, these data displays the following message within 10 minutes every hour.

```
M6112 STATISTICS ON PAGING
ITEM = PAG
DATE = YY-MM-DD HH:MM ~ HH:MM
BSC_ID = aa
BTS_ID   ATT_1ST  ATT_2ND   RESPONSE  NO_RESP
   bb      x        x          x         x
```

```
...
RESULT = OK
COMPLETED
 aa : BSC ID
 bb : BCP ID
```

3) Analysis on the output parameters

The following parameters are related to statistics of paging.

Items	Contents
ATT_1st	The number of attempts of the first paging
ATT_2nd	The number of attempts of the second paging
RESPONSE	The number of PS's response for paging
NO_RESP	The number of no responses for paging

(13) Statistics of the Fault of RF in BTS

1) Using the following command, you can start to the statistics of the Fault of RF in BTS.

```
C6120 STRT-STAT-RFF : [BSC=a,[BCP=b,]]MPRD=c,MTIM=d;
a : BSC ID (0 ~ 6)
b : BCP ID (0 ~ 5)
c : Measurement Period (MIN10|HALF|HOUR)
e : Measurement Times (1 ~ 50)
```

System displays the "ACCEPTED" message.

- Gathering the data of statistics starts the absolute time on 10, 20, 30, 40, 50, and 00.

2) As soon as the operators request statistics, the data of statistics are accumulated. Whenever the given periodic time (relative time 10, 30 and 60 minutes) is returned, these data displays the following message within 10 minutes every hour.

```
M6120 STATISTICS ON RF PERFORMANCE
ITEM = RF_FAULT
```

```
DATE = yy:mm:dd HH:MM ~ HH:MM
BSC_ID = aa
BTS   FA  SEC    HPA    LNA  UP_BRD  UP_PLL  DN_BRD  DN_PLL   AGC
 bb    d   c      x      x      x       x       x       x      x
...
RESULT = OK
COMPLETED
aa  : BSC ID
bb  : BCP ID
c   : SECTOR ID
d   : FA ID
```

3) Analysis on the output parameters

The following parameters are related to Statistics of the performance of RF in BTS.

Items	Contents
HPA	The abnormal state of HPA
LNA	The abnormal state of LNA(Low Noise Amplifier)
UP_BRD	The abnormal state of board of Up Converter
UP_PLL	The abnormal state of PLL of Up Converter
DN_BRD	The abnormal state of board of Down Converter
DN_PLL	The abnormal state of PLL of Down converter
AGC	When the value of AGC(Automatic Gain Control) does not satisfy the range values, from –45 to –100 dBm, BSM gets the range values from RFC and then sends the measurement to BCP.

(14) Statistics of Location Registration

1) You can use the following command to start to the statistics of location registration.

```
C6113 STRT-STAT-LR : [BSC=a,]MPRD=b,MTIM=c;
a : BSC ID (0 ~ 6)
b : Measurement Period (MIN10|HALF|HOUR)
c : Measurement Times (1 ~ 50)
```

System displays the "ACCEPTED" message.

- Gathering the data of statistics starts the absolute time on 10, 20, 30, 40, 50, and 00

2) As soon as the operators request statistics, the data of statistics are accumulated. Whenever the given periodic time (relative time 10, 30 and 60 minutes) is returned, these data displays the following message within 10 minutes every hour.

```
M6113 STATISTICS ON LOCATION REGISTRATION
ITEM = LR
DATE = yy:mm:dd HH:MM ~ HH:MM
BSC_ID = aa
P_U_ATT  P_U_SUC  P_U_FAIL  P_D_ATT  P_D_SUC  P_D_FAIL  TMR_ATT  TMR_SUC  TMR_FAIL
P_C_ATT  P_C_SUC  P_C_FAIL  ORD_ATT  ORD_SUC ORD_FAIL  Z_B_ATT   Z_B_SUC   Z_B_FAIL
x        x        x        x        x        x        x        x        x
x        x        x        x        x        x        x        x        x
...
RESULT = OK
COMPLETED
aa : BSC ID
```

3) Analysis on the output parameters

The following parameters are related to statistics of location registration.

Items	Contents
P_U_ATT	The number of attempt to location registration by the power down of MS
P_U_SUC	The number of success of location registration by the power on of MS
P_U_FAIL	The number of failure of location registration by the power on of MS
P_D_ATT	The number of attempt to location registration by the power down of MS
P_D_SUC	The number of success of location registration by the power down of MS
P_D_FAIL	The number of failure of location registration by the power down of MS
TMR_ATT	The number of attempt to location registration by the periodic timer
TMR_SUC	The number of success of location registration by the periodic timer

TMR_FAIL	The number of failure of location registration by the periodic timer
P_C_ATT	The number of attempt to the location registration by the change of parameters (SLOT_CYCLE_INDEX, SCM, and MOB_TERM)
P_C_SUC	The number of success of the location registration by the change of parameters (SLOT_CYCLE_INDEX, SCM, and MOB_TERM)
P_C_FAIL	The number of failure of the location registration by the change of parameters (SLOT_CYCLE_INDEX, SCM, and MOB_TERM)
ORD_ATT	The number of attempt to location registration by the command of requesting for it.
ORD_SUC	The number of success of location registration by the command of requesting for it.
ORD_FAIL	The number of failure of location registration by the command of requesting for it.
Z_B_ATT	The number of attempt to the location registration by the change of zone
Z_B_SUC	The number of success of location registration due to the change of zone.
Z_B_FAIL	The number of failure of location registration due to the change of zone

(15) Statistics of No.7

1) You use the following command to start to the statistics of No.7.

```
C6121 STRT-STAT-MTP:[BSC=a,]ITEM=b,MPRD=c,MTIM=d;
 a : BSC ID (0 ~ 6)
 b : Item (PERF|AVL|UTL|ALL)
 c : Measurement Period (MIN10|HALF|HOUR)
 d : Measurement Times (1 ~ 50)

C6122 STRT-STAT-SCCP:[BSC=a,]ITEM=b,MPRD=c,MTIM=d;
 a : BSC ID (0 ~ 6)
 b : Item (PERF|AVL|UTL|ALL)
 c : Measurement Period (MIN10|HALF|HOUR)
 d : Measurement Times (1 ~ 50)
```

System displays the "ACCEPTED" message.

- Gathering the data of statistics starts the absolute time on 10, 20, 30, 40, 50, and 00.

2) As soon as the operators request statistics, the data of statistics are accumulated. Whenever the periodic time (relative time 10, 30 and 60 minutes) is returned, these data displays the following message within 10 minutes every hour.

```
M6121 STATISTICS ON NO7 LINK
ITEM = LINK_PERF
DATE = YY-MM-DD HH:MM ~ HH:MM
BSC_ID = aa
LINK     IN_SVC    FL_ALL   FL_ABNM    FL_ACK     FL_ERR   FL_CONG  FL_ALIGN
      NSU_ERR  NEG_ACK    COO_TX    COO_RX    CBD_TX    CBD_RX
 bb          x         x         x         x         x         x         x
            x         x         x         x         x         x
 ...
 RESULT = OK
 COMPLETED

  M6121 STATISTICS ON NO7 LINK
  ITEM = LINK_AVAIL
  DATE = YY-MM-DD HH:MM ~ HH:MM
  BSC_ID = aa
  LINK  LOC_BUSY  LNK_UNAV  LNK_I_TX  LNK_I_RX  LNK_U_TX  LNK_U_RX
    bb         x         x         x         x         x         x
   ...
  RESULT = OK
  COMPLETED

  M6121 STATISTICS ON NO7 LINK
  ITEM = LINK_UTIL
  DATE = YY-MM-DD HH:MM ~ HH:MM
  BSC_ID = aa
  LINK  SIFOCTTX  SIFOCTRX   RETRANS    MSU_TX    MSU_RX  CONG_DRP  LINK_CONG
 SIOOCTTX  SIOOCTRX
bb         x         x         x         x         x         x         x
        x         x
  ...
  RESULT = OK
  COMPLETED
```

```
aa : BSC ID
bb : Link ID

M6122 STATISTICS ON NO7 SCCP
ITEM = SCCP_PERF
DATE = YY-MM-DD HH:MM ~ HH:MM
BSC_ID = aa
NET_FAIL  SSN_FAIL   STX_ERR   UNKNOWN  NET_CONG   UNEQUIP  SSN_CONG
x         x          x          x         x         x         x
RESULT = OK
COMPLETED

M6122 STATISTICS ON NO7 SCCP
ITEM = SCCP_AVAIL
DATE = YY-MM-DD HH:MM ~ HH:MM
BSC_ID = aa
RESULT = NOK
REASON = DATA UNDEFINED
COMPLETED

M6122 STATISTICS ON NO7 SCCP
ITEM = SCCP_UTIL
DATE = YY-MM-DD HH:MM ~ HH:MM
BSC_ID = aa
MSG_HAND   MSG_LOC  MSG_TXC0  MSG_RXC0
 x          x          x          x
RESULT = OK
COMPLETED
aa : BSC ID
```

3) Analysis on output parameters

The following parameters are related to statistics of signaling link performance.

Items	Contents
IN_SVC	Start of in-service
FL_ALL	All reasons for a signaling link failure
FL_ABNM	Abnormal FIBR/BSNR link failure
FL_ACK	Delay of acknowledgement link failure
FL_ERR	Excessive error rate link failure
FL_CONG	Excessive congestion link failure
FL_ALIGN	Alignment link failure
NSU_ERR	Number of signal units in error
NEG_ACK	Number of negative acknowledgements
COO_TX	Changeover, order transmitted
COO_RX	Changeover, order received
CBD_TX	Change back, declaration transmitted
CBD_RX	Change back, declaration received

The following parameters are related to statistics of signaling link availability.

Items	Contents
LOC_BUSY	Duration of local-busy
LNK_UNAV	Duration of link unavailability
LNK_I_TX	Link inhibit transmitted
LNK_I_RX	Link inhibit received
LNK_U_TX	Link uninhibit transmitted
LNK_U_RX	Link uninhibit received

The following parameters are related to statistics of signaling link utility.

Items	Contents
SIFOCTTX	Number of SIF octets transmitted
SIFOCTRX	Number of SIF octets received

RETRANS	Number of octets retransmitted
MSU_TX	Number of MSU transmitted
MSU_RX	Number of MSU received
CONG_DRP	MSUs dropped due to link congestion
LNK_CONG	Duration of link congestion
SIOOCTTX	Number of SIO octets transmitted
SIOOCTRX	Number of SIO octets received

The following parameters are related to statistics of SCCP performance.

Items	Contents
NET_FAIL	Network failure (point code unavailable)
SSN_FAIL	Subsystem failure
STX_ERR	Syntax Error
UNKNOWN	Reason Unknown
NET_CONG	Network Congestion
UNEQUIP	Unequipped user
SSN_CONG	Subsystem Congestion

- Statistics Item of SCCP Availability – Not decided

  There is no consistent with S/W item of Trillium of the parameters described in Q.752. This item corresponds to the item of availability(Note: for SOR and SOG, this item exists the parameter but HEI's system does not use it).

The following parameters are related to statistics of SCCP utility.

Items	Contents
MSG_HAND	Total messages handled
MSG_LOC	Total messages intended for local subsystem
MSG_TXC0	Total messages sent, class 0
MSG_RXC0	Total messages received, class 0

- In overloading, the function of measurement and statistics can be limited.

3.3 Data Management

The Data is changed according to configuration or environment of BTS and BSC.
Therefore, it is necessary to adjust as an appropriate value.

3.3.1 Access Channel Parameter

[BSMcmd : xx] DIS-AC-PARA:BTS=0,SECT=ALPHA,FA=0,PC=0;
M5016 DISPLAY ACCESS CHANNEL PARAMETER
BSC : 0 BCP : 0 BTS : 0 NAME : Grand

SECTOR_ID : ALPHA CDMA_CH_INDEX : 0
PC_ID : 0 NUM_DEMODS : 4
PREAMBLE_INTG_PERIOD : 3 PREAMBLE_WIN_LENGTH : 1280
PREAMBLE_PN_OFFSET : 160 MULTIPATH_INTG_PERIOD : 6
MULTIPATH_WIN_LENGTH: 128 MULTIPATH_GAIN : 1
NOLOCK_THRESH : 63 LOCK_THRESH : 65
COMBINE_THRESH : 70

ITEMS	RANGE	DESCRIPTION
SECTOR_ID	0 ~ 2	It is the Sector id number per BTS, and it sets on the basis of 3 sectors. In case of the omni sector, SECTOR_ID is 0.
CDMA_CH_INDEX	Refer to 3.3.4	It is the CDMA series channel number per BTS, and consists of CDMA frequency at BTS. Now, it accommodates the eight frequencies.
PC_ID	0 ~ 6	It is a paging channel discrimination number, and it accommodates 7 paging numbers per one sub-cell.
NUM_DEMODS	1 ~ 4	The number of demodulator ASIC per channel.

ITEMS	RANGE	DESCRIPTION
PREAMBLE_INTG _PERIOD	2 ~ 4	When BTS searches preamble of Access probe of Access channel BTS gets the correlation of mobile station signal and generated signal by PN generator. And its period is Walsh symbol (8preamble_intg_period).
PREAMBLE_WIN_ LENGTH	0 ~ 3071	By size of preamble search window, BTS adapt the biggest PN offset out of correlation result of Preamble_win_length/4.
PREAMBLE_PN_O FFSET	0 ~ 3071	Initial value of PN offset, when Access channel searches preamble of Access probe.
MULTIPATH_ INTG_PERIOD	2 ~ 6	It is given as an 8-correlation integration period, when Access channel searches multi-path component of data part for access probe for Access channel.
MULTIPATH_WIN_ LENGTH	1 ~240	The size of the multi-path component search window for access probe.
MULTIPATH_ GAIN	0 ~ 255	This parameter is used when PN offset is allocated to finger. Here, PN offset has maximum energy out of multi-path component.
NOLOCK_ THRESH	0 ~ 65535	This is a threshold that should be run over as much as to_nolock_cnt times for changing fingers from the state of locking to the state of unlocking. This threshold is integer value between 0 to 65535.
LOCK_THRESH	0 ~ 65535	This is a threshold that should be run over as much as to_lock_cnt times for changing fingers from the state of unlocking to the state of locking. This threshold is integer value between 0 to 65535.
COMBINE_ THRESH	0 ~ 65535	If accumulated and filtered Energy that is finger of current lock state exceeds this value, output energy of the finger is used to symbol combine process.

3.3.2 Access Parameter

[BSMcmd : xx] DIS-ACC-MSG:BTS=0,SECT=BETA,FA=0,PC=0;

M5019 DISPLAY ACCESS PARAMETER MESSAGE

BSC : 0 BCP : 0 BTS : 0 NAME : Grand

SECTOR_ID : BETA CDMA_CH_INDEX : 0
PC_ID : 0 NORMINAL_PWR : 0
INITIAL_PWR : 0 PWR_STEP : 6
NUM_STEP : 6 MAX_CAP_SIZE : 0
PREAMBLE_SIZE : 3 PSIST_0_9 : 0
PSIST_10 : 0 PSIST_11 : 0
PSIST_12 : 0 PSIST_13 : 0
PSIST_14 : 0 PSIST_15 : 0
MSG_PSIST : 0 REG_PSIST : 0
PROBE_PN_RANDOM : 0 ACC_TIMEOUT : 5
PROBE_BACKOFF : 1 BACKOFF : 1
MAX_REQ_SEQ : 2 MAX_RSP_SEQ : 2
AUTH : NO RAND : 0
NOR_PWR_EXT : 0

ITEMS	RANGE	DESCRIPTION
SECTOR_ID	0 ~ 2	Sector ID
CDMA_CH_INDEX	Refer to 3.3.4	CDMA channel index of BTS
PC_ID	0 ~ 6	Paging channel ID
NORMINAL_PWR	-128 ~ 127	Nominal transmission power offset value
INITIAL_PWR	-128 ~ 127	The initial power offset value
PWR_STEP	0 ~ 7	Power increment value
NUM_STEP	0 ~ 15	It has num_step+1 probes within an access probe sequence.

ITEMS	RANGE	DESCRIPTION
MAX_CAP_SIZE	0 ~ 7	This parameter value is equal to [Maximum frames of access channel message capsule in access channel slot - 1].
PREAMBLE_SIZE	0 ~15	This parameter value is equal to [Maximum frames of access channel preamble in access channel slot - 1].
PSIST_0_9	0 ~ 63	This value is between 0 and 63 as persistence for overload classes 0 ~ 9 (commercial mobile system).
PSIST_10	0 ~ 7	This value is between 0 and 7 as persistence for overload classes 10 (Emergency Use).
PSIST_11	0 ~ 7	This value is between 0 and 7 as persistence for overload classes 11 (Reserved).
PSIST_12	0 ~ 7	This value is between 0 and 7 as persistence for overload classes 12 (Reserved).
PSIST_13	0 ~ 7	This value is between 0 and 7 as persistence for overload classes 13 (Reserved).
PSIST_14	0 ~ 7	This value is between 0 and 7 as persistence for overload classes 14 (Reserved).
PSIST_15	0 ~ 7	This value is between 0 and 7 as persistence for overload classes 15 (Reserved).
MSG_PSIST	0 ~ 7	This value is between 0 and 7 as persistence for message transmission.
REG_PSIST	0 ~ 7	This value is between 0 and 7 as persistence for registration.
PROBE_PN_ RANDOM	0 ~ 9	When mobile station sends access probe to base station, this is a random parameter for sending to access probe with random delay at access slot.
ACC_TIMEOUT	2 ~ 63	After sending access probe, mobile station awaits acknowledgment from base station during acc_timeout.

ITEMS	RANGE	DESCRIPTION
PROBE_ BACKOFF	0 ~ 15	This is a backoff range between access probe transmission. (After awaiting this period, mobile station sends access probe sequence again.)
BACKOFF	0 ~ 15	This is a backoff range between access probe sequence.
MAX_REQ_SEQ	1 ~ 15	Maximum value of access probe sequence about access channel request.
MAX_RSP_SEQ	1 ~ 15	Maximum value of access probe sequence about access channel response.
AUTH	0 ~ 1	Authentication mode 00 : does not authentication process 01 : does authentication process with rand
RAND	0 ~ 1	Random challenge number If AUTH is '00', this parameter is omitted. If AUTH is "01", this parameter have random number of 32 bit.
NOR_PWR_EXT	0 ~ 1	Extended normal transmission power

3.3.3 Information of BTS Configuration

```
[ BSMcmd : xx ] DIS-BTS-CONF:BTS=0;
M5000 DISPLAY BTS CONFIGURATION
  BSC : 0    BCP : 0    BTS : 0     NAME : Grand

BTS_ID              : 0              BTS_NAME            : Grand
EQP_STS          : EQP       BLK_STS             : UBLK
BTS_TYPE            : SECTOR    BASE_CLASS      : PCS
SID                 : 2222          NID                 : 4
NUM_CDMA_CH         : 2              NUM_SECTOR        : 3
REG_ZONE            : 3              LTM_OFF           : 18
DAY_LT              : SAVING        PRAT               : 0(9600BPS)
NGHBOR_MAX_AGE      : 0              PILOT_INCREMENT    : 2
```

PREF_MSID_TYPE : 3 TMSI_ZONE : 0
MCC : 971 IMSI_11_12 : 0
BAND_CLASS : 1 GRANTED_MODE : 1
EXPECTED_SID : 0 EXPECTED_NID : 0
TMSI_EXP_TIME : 0 BASE_LAT : 0
BASE_LOGN : 0

ITEMS	RANGE	DESCRIPTION
BTS_ID	0 ~ 511	BTS ID
BTS_NAME	xxxxxxxx	BTS name
EQP_STS	0 ~ 1	Set up equips state of BTS. 0 : N_EQUIP, 1: EQUIP
BLK_STS	0 ~ 4	Set up Block State of BTS. 0 : M_UBLK 1 : M_BLK 2 : T_BLK 3 : F_BLK 4 : FT_BLK
BTS_TYPE	0 ~ 4	Set up configuration BTS. 0 : Sector BTS 2 : OD_SECTOR 1 : Omni BTS 3 : OD_OMNI 4 : OD_MINI 5 : U_SECTOR 6 : U_OMNI
BASE_CLASS	0 ~ 1	BTS Class 0 : CDMA System 1: PCS System
SID	0 ~ 32767	System ID number
NID	0 ~ 65535	Network ID Number
NUM_CDMA_CH	0 ~ 7	Number of frequency channel using in BTS
NUM_SECTOR	1 ~ 3	Number of sector using in BTS
REG_ZONE	0 ~ 127	Registration Zone Number of BTS (NID Group numbers)
LTM_OFF	-24 ~ 24	Local Time Offset from UTC. (Unit : 30 minutes)
DAY_LT	0 ~ 1	0 = standard time 1 = Daylight saving time flag

ITEMS	RANGE	DESCRIPTION
PRAT	0 ~ 4	Paging channel data rate (But, only 0 or 1 value are allowed) 0 : 9600bps 1 : 4800bps 2 : 2400bps 3 : 1200bps
NGHBOR_MAX_ AGE	0 ~ 1	Maximum neighbor set configuration for maintenance.
PILOT_ INCREMENT	0 ~ 15	Increment value of Pilot PN Sequence Offset Index
PREF_MSID_ TYPE	0 ~ 7	Suggesting MSID type at Base Station 010 : IMSI 011 : IMSI and ESN 110 : TMSI and IMSI 111 : TMSI, IMSI and ESN
TMSI_ZONE	0	TMSI Zone number
MCC	0 ~ 999	National code of mobile
IMSI_11_12	0 ~ 99	The 11th, 12th digit value of IMSI
BAND_CLASS	0 ~ 1	Band Class 0 : 800MHz Cellular Band, 1 : 1.8 ~ 2.0 GHz Band

ITEMS	RANGE	DESCRIPTION
GRANTED_ MODE	0 ~ 2	Permission Mode 0 : The initial Service Configuration of Mobile Station is made up of Multiple Option1, and Rate Set1. Service of MS before receiving is receive the first Service Connect Message. 1 : The initial Service Configuration of Mobile Station is made up of default Multiple Option and transmission rate required by MS. Service of MS is determined the first Service Connect Message. 2 : The initial Service Configuration of Mobile Station is made up of default Multiple Option and transmission rate required by MS. Service of MS is not determined before receiving the first Service Connect Message.
EXPECTED_SID	0 ~ 1	Expected SID - System value when Mobile Station is redefined as a new system.
EXPECTED_NID	0 ~ 1	Expected NID - System value when Mobile Station is redefined as a new system.
TMSI_EXP_TIME	0 ~ 255	TMSI maintenance time
BASE_LAT	-1296000 ~ 1296000	The latitude of Base Station
BASE_LOGN	-2592000 ~ 2592000	The longitude of Base Station

3.3.4 Base Station CDMA Environment

[BSMcmd : xx] DIS-FA-PARA:BTS=0;

M5012 DISPLAY CDMA CHANNEL INDEX LIST

BSC : 0 BCP : 0 BTS : 0 NAME : Grand

CDMA_CH_INDEX	CDMA_CH_ID	CDMA_CH_KIND	HANDOFF_TCE_RESERVE(%)
0	0	COMMON	0
1	1	COMMON	0

ITEMS	RANGE	DESCRIPTION
CDMA_CH_INDEX	0 ~ (MAX_CDMA_CH_IDX -1)	Maximum allowable frequency Index
CDMA_CH_ID	0 ~ (MAX_CDMA_CH_IDX -1)	Maximum allowable frequency ID
CDMA_CH_KIND	0 ~ 2	0:NO_SVC 1:COMMON 2:UNIQUE
HANDOFF_TCE_RESERVE	0 ~ 100	Reserve allowable rate (Percent)

3.3.5 Base Station CDMA Information

[BSMcmd : xx] DIS-CDMA-INFO;

M5002 DISPLAY CDMA CHANNEL ID LIST

CDMA_CH_ID	CDMA_CH_NUM
0	350
1	250
2	65535
3	65535
4	65535
5	65535
6	65535

ITEMS	RANGE	DESCRIPTION
CDMA_CH_ID	Refer to 3.3.4	The maximum allowable frequency ID
CDMA_CH_NUM	1 ~ 1023	CDMA Channel Number corresponding to transmit frequency.

3.3.6 Base Station Channel List Message

[BSMcmd : xx] DIS-CHLIST-MSG:BTS=0,SECT=BETA;
M5090 DISPLAY CDMA CHANNEL LIST MESSAGE
BTS : 0(Grand) SECTOR : BETA

PILOT_PN : 120
CDMA_FREQ : 350
CDMA_FREQ : 250

ITEMS	RANGE	DESCRIPTION
PILOT_PN	0 ~ 511	MS classified various signals from base station or sector by offsets with basic PN code.
CDMA_FREQ	1 ~ 1023	CDMA Channel Number corresponding to transmit frequency.

3.3.7 Extended System Parameter Information

[BSMcmd : xx] DIS-EXTSYS-MSG:BTS=0,SECT=ALPHA,FA=0;
M5089 DISPLAY EXTENDED SYSTEM PARAMETER MESSAGE
BTS : 0(Grand) SECTOR : ALPHACDMA_CH_INDEX : 0

PILOT_PN : 100 PREF_MSID_TYPE : 3
MCC : 971 IMSI_11_12 : 0
TMSI_ZONE : 0 BCAST_INDEX : 0

ITEMS	RANGE	DESCRIPTION
PILOT_PN	0 ~ 511	MS classified various signals from base station or sector by offsets with basic PN codes.
PREF_MSID_TYPE	2 ~ 7	Preferred Access Channel Mobile Station Identifier Type.
MCC	0 ~ 999	National code of mobile
IMSI_11_12	0 ~ 99	The 11th, 12th digit value of IMSI
TMSI_ZONE	0	TMSI Zone number
BCAST_INDEX	0 or other	Broadcast slot cycle index (0 : disable, other : enable)

3.3.8 Forward Link Power Information

[BSMcmd : xx] DIS-FWDP-INFO:BTS=0,SECT=ALPHA,FA=0;

M5013 DISPLAY FORWARD POWER DATA

BSC : 0 BCP : 0 BTS : 0 NAME : Grand

SECTOR_ID : ALPHA CDMA_CH_INDEX : 0
FWD_GAIN_RPT : DISABLE POWER_BANK : 8128
SHUFFLE_THRESHOLD : 0 SHUFFLE_OFFSET : 0
SHRINK_THRESHOLD : 0 UNSHRINK_THRESHOLD : 0
SHRINK_OFFSET : 0 REACTION_TIME : 800
GAIN_HI_RPT_THRESHOLD: 5 GAIN_LO_RPT_THRESHOLD : 5
REPORT_INTERVAL : 0 HO_PWR_RESERV : 0
LIMIT_CELL_DEC_PERCENT : 80

ITEMS	RANGE	DESCRIPTION
SECTOR_ID	0 ~ 2	Sector ID
CDMA_CH_INDEX	Refer to 3.3.4	CDMA channel index of Base Station

ITEMS	RANGE	DESCRIPTION
FWD_GAIN_RPT	0 ~ 1	If this parameter value is 1 and gain of traffic channel element isn't 0 and when there are occurrences or no occurrences of traffic channel element to cell controller, the base station sends forward link power control message to mobile station by report_interval. If this parameter value is 0, the base station does not send forward link power control message to mobile station and cell controller does not perform the role of forward link power control, like shrink, shuffle, etc. 0 : DISABLE 1 : ENABLE
POWER_BANK	0 ~ 2^{32}-1	Total transmitting power of CDMA channel, which this record belongs. (The summation of square of each channel gain)
SHUFFLE_ THRESHOLD	0 ~ 2^{32}-1	Power shuffle threshold This value is compared with extra power of sector. So, if the current extra power in power bank is less than this value, cell controller performs shuffle.
SHUFFLE_ OFFSET	0 ~ 80	Default shuffle down index When this value is received at forward power shuffle broadcast message, traffic channel element changes power by -3+default_shfl/8.
SHRINK_ THRESHOLD	-2^{31} ~ 2^{32}-1	Cell shrink threshold. If currently remained power in power bank is less than this value, cell controller reduces pilot gain by shrink_decr and sends pilot gain to pilot, sync channel element through forward power broadcast message.

ITEMS	RANGE	DESCRIPTION

UNSHRINK_ THRESHOLD	-2^{31} ~ $2^{32}-1$	Cell unshrink threshold. If currently remained power in power bank is more than this value and the current pilot gain is less than pilot gain which set initially, increases pilot gain by certain value.
SHRINK_OFFSET	0 ~ 127	Reducing quantity of pilot gain when cell execute shrink function.
REACTION_TIME	0 ~ 65535	After performing shrink or shuffle operation, shrink or shuffle function can be performed after this time.
GAIN_HI_RPT_ THRESHOLD	0 ~ 127	High gain threshold Traffic channels element the condition of sending forward link power control report message to cell controller.
GAIN_LO_RPT_ THRESHOLD	0 ~ 127	Low gain threshold Traffic channels element the condition of sending forward link power control report message to cell controller.
REPORT_ INTERVAL	0 ~ 255	Traffic channel element should report current gain of itself to cell controller again at least within this interval reporting gain of itself before, although current gain is not more than high threshold or not less than low threshold.
HO_PWR_ RESERV	0 ~ 65535	Power value which will be used for reserved, which will be used for reserved besides power for basic call when handoff.
LIMIT_CELL_DEC _PERCENT	0 ~100	Limit value of the pilot gain difference when shrinks or unshrinks.

3.3.9 Paging Channel Parameter

[BSMcmd : xx] DIS-PC-PARA:BTS=0,SECT=ALPHA,FA=0,PC=0;

M5018 DISPLAY PAGING CHANNEL PARAMETER

BSC : 0 BCP : 0 BTS : 0 NAME : Grand

SECTOR_ID : ALPHA CDMA_CH_INDEX : 0

PC_ID : 0 PC_GAIN : 65

ITEMS	RANGE	DESCRITION
SECTOR_ID	0 ~ 2	Sector ID
CDMA_CH_INDEX	Refer to 3.3.4	CDMA channel index of BTS
PC_ID	0 ~ 6	Paging channel discrimination number. One sub-cell has maximum 7 paging numbers.
PC_GAIN	0 ~ 127	Paging channel gain value

3.3.10 Psync Channel Parameter

[BSMcmd : xx] DIS-PSC-PARA:BTS=0,SECT=ALPHA,FA=0;

M5017 DISPLAY PILOT/SYNC CHANNEL PARAMETER

BSC : 0 BCP : 0 BTS : 0 NAME : Grand

SECTOR_ID : ALPHA CDMA_CH_INDEX : 0

PILOT_GAIN : 108 SYNC_GAIN : 34

ITEMS	RANGE	DESCRIPTION
SECTOR_ID	0 ~ 2	Sector ID
CDMA_CH_INDEX	Refer to 3.3.4	CDMA channel index of BTS
PILOT_GAIN	0 ~ 127	Pilot channel gain value
SYNC_GAIN	0 ~ 127	Sync channel gain value

3.3.11 RFC Parameter

[BSMcmd : xx] DIS-RFC-PARA:BTS=0,SECT=BETA,FA=0;

M5020 DISPLAY RADIO FREQUENCY CARD DATA

BSC : 0 BCP : 0 BTS : 0 NAME : Grand

SECTOR_ID : BETA CDMA_CH_INDEX : 0
RX_A_ATTEN : 0 RX_B_ATTEN : 0
TX_ATTEN : 0 FUNC_SWITCH : 0
NOISE_COUNT : 10 F_DECAY : 128
F_UPDATE_RATE : 100 RX_A_LOSS : 41
RX_B_LOSS : 41 K_SLOPE : 1
K_DELTA : 3 TX_GAIN_DELTA : 1
GEN_UPD_RATE : 200 PWR_TX_TIME : 1
DELTA_TX_ATTEN : 1 RCV_CALL_BLK_THR : 1
RCV_CALL_UBLK_THR : 1

ITEMS	RANGE	DESCRIPTION
SECTOR_ID	0 ~ 2	Sector ID.
CDMA_CH_INDEX	Refer to 3.3.4	CDMA channel index of BTS
RX_A_ATTEN	0 ~ 127	Attenuation of noise (Reverse OUN) added to receiver A paths in 0.5dB steps from 0 to 63.5dB. Initial values of Rx A attenuator.
RX_B_ATTEN	0 ~ 127	Attenuation of noise (Reverse OUN) added to receiver B paths in 0.5dB steps from 0 to 63.5dB. Initial value of Rx B attenuator.
TX_ATTEN	0 ~ 127	Transmission loss. So it is not used because there is no OUNS. But this is used as the meaning of attenuation level of received signal for transmit path.
ITEMS	RANGE	DESCRIPTION

FUNC_SWITCH	0 ~ 1	Set up Cell breathing in response to changes of received power changes.
NOISE_COUNT	10	Repeat number of noise insertion attenuation which activates cell partly or fully as a cell received noise estimate variable.
F_DECAY	128	Attenuation constant value of total received power filter as reverse link received power estimation parameter.
F_UPDATE_RATE	100	Compensation ratio value of total received power filter as reverse link received power estimation parameter.
RX_A_LOSS	41	As this is the reverse received power assumption parameter, it is a relatively received path attenuation value for received path A.
RX_B_LOSS	41	As this is the reverse received power assumption parameter, it is a relatively received path attenuation value for received path B.
K_SLOPE	1	Cell breathing related variable, slope value of breathing mode.
K_DELTA	3	Cell breathing related variable, deviation value of breathing mode
TX_GAIN_DELTA	1	Cell breathing related variable, deviation value of Maximum Transmission Gain.
GEN_UPD_RATE	200	Compensation ratio of total received power filter as reverse link received power estimation parameter.

ITEMS	RANGE	DESCRIPTION
PWR_TX_TIME	1	As this is the reverse link received power estimation parameter, it is the total received power filter compensation ratio value.
DELTA_TX_ATTEN	1	None
RCV_CALL_BLK_ THR	1	None
RCV_CALL_UBLK_ THR	1	None

3.3.12 Forward Link Power Control Data

(1) Rate Set 1 (9600bps)

If it does not receive "Power Measurement Report Message" from MS in the initial value for the definite time, it reduces the value to minimum as the definded down step. After receiving the message from MS, it increases the gain as the definded up step referring to the message.

ITEMS	RANGE	DEFAULT	DESCRIPTION
FPC_MODE	0/1	0	The fixed(0) or variable(1) flag for the minimun value of power control
FER_THRESHOLD	1 ~ 10	6	The threshold value (%) to determine small_up or big_up referring to the forward link FER taken by PMRM.
SMALL_UP_DELTA	1 ~ 10	5	The power control rising step for the forward link FER below fer_threshold.

BIG_UP_DELTA	1 ~ 10	10	The power control up step for the forward link FER above fer_threshold.
DOWN_TIME	500~4000	1600	Down timer value (ms)
DOWN_DELTA	1 ~ 10	1	Down step after down timer is expired.
NORMINAL_GAIN	34~108	50	The initial value for the forward link control.
MAX_TX_GAIN	50~108	80	The maximum value for the forward link control.
FLOOR_ONE_WAY	34~50	40	The minimum value (1cell)
FLOOR_TWO_WAY	34~108	66	The minimum value (2cell)
FLOOR_THREE_WAY	34~108	73	The minimum value (3cell)
SIGNAL_DELTA_GAIN	64~128	96	The parameter for getting the signal message power control value : The signal message power control value = The present power control value X signal_delta_gain/64
PCSC_DELTA_GAIN_1	64~128	64	In case of 1 active BTS, the paremeter for the power control value of reverse link power control bit. : pcsc_gain = The present power control value X pcsc_delta_gain_1/64
PCSC_DELTA_GAIN_2	64~128	96	In case of 2 active BTS, the paremeter for the power control value of reverse link power control bit. : pcsc_gain = The present power control value X pcsc_delta_gain_2/64

PCSC_DELTA_GAIN_3	64~128	112	In case of 3 active BTS, the paremeter for the power control value of reverse link power control bit. : pcsc_gain = The present power control value X pcsc_delta_gain_3/64

(2) Rate set 2 (14400bps)

It is shown the quality of the forward frame using the erasure indicator bit of rate set 2 in real time, so we can control the forward link power, speedly and accurately.

ITEMS	RANGE	DEFAULT	DESCRIPTION
FPC_MODE	0/1	0	The fixed(0) or variable(1) flag for the minimun value of power control
FER_TOTAL_FRAMES	0 ~50	4	Total frames to obtain the forward link power control FER.
SMALL_UP_THRESHOLD	10~100	30	The forward link FER threshold (%) for small up
MIDDLE_UP_THRESHOLD	10~100	60	The forward link FER threshold (%) for middle up
FULL_UP_THRESHOLD	10~100	70	The forward link FER threshold (%) for full up
SMALL_UP_DELTA	1 ~ 10	2	The power control rising step for small up
MIDDLE_UP_DELTA	1~10	3	The power control rising step for middle up
BIG_UP_DELTA	1 ~ 10	5	The power control rising step for big up
FULL_UP_DELTA	1~10	2	The power control rising step for full up
DOWN_TIME	500~4000	1600	Down timer value (ms)

DOWN_DELTA	1 ~ 10	1	Down step after down timer is expired.
NORMINAL_GAIN	34~108	50	The initial value for the forward link control.
MAX_TX_GAIN	50~108	80	The maximum value for the forward link control.
FLOOR_ONE_WAY	34~50	40	The minimum value (1cell)
FLOOR_TWO_WAY	34~108	66	The minimum value (2cell)
FLOOR_THREE_WAY	34~108	73	The minimum value (3cell)
SIGNAL_DELTA_GAIN	64~128	96	The parameter for getting the signal message power control value : The signal message power control value = The present power control value X signal_delta_gain/64
PCSC_DELTA_GAIN_1	64~128	64	In case of 1 active BTS, the paremeter for the power control value of reverse link power control bit. : pcsc_gain = The present power control value X pcsc_delta_gain_1/64
PCSC_DELTA_GAIN_2	64~128	96	In case of 2 active BTS, the paremeter for the power control value of reverse link power control bit. : pcsc_gain = The present power control value X pcsc_delta_gain_2/64

PCSC_DELTA_GAIN_3	64~128	112	In case of 3 active BTS, the paremeter for the power control value of reverse link power control bit. : pcsc_gain = The present power control value X pcsc_delta_gain_3/64

3.3.13 Reverse Link Power Control Data

[BSMcmd : xx] DIS-RPC-INFO:BTS=0,SECT=GAMMA,FA=0;

M5033 DISPLAY REVERSE POWER CONTROL DATA

BSC : 0 BCP : 0 BTS : 0 NAME : Grand

BTS_ID : 0

SECTOR_ID : GAMMA

CDMA_CH_ID : 0

PWRCTL_NORMINAL : 26704 PWRCTL_MAX : 36408

PWRCTL_MIN : 15128 PWRCTL_UP_FULL : 3072

PWRCTL_UP_ERASURE : 248 PWRCTL_UP_ERASURE_LITTLE : 50

PWRCTL_DOWN : 32 PWRCTL_VAR_DOWN : 4

PWRCTL_FULL_WAIT : 1 PWRCTL_FULL_RUN_RESET : -2

PWRCTL_ERASURE_RUN_LIM : 5

ITEMS	RANGE	DESCRIPTION
BTS_ID	0 ~ 511	Base Station ID
SECTOR_ID	0 ~ 2	Sector ID
CDMA_CH_ID	Refer to 3.3.4	Base Station CDMA channel index

ITEMS	RANGE	DESCRIPTION
PWRCTL_NORMINAL	26704	As this is the reverse link power control critical value, power control critical value begins from this value in the beginning of call setup.
PWRCTL_MAX	36408	As this is the reverse link power control maximum value, this value is set in case that critical value is more than this value.
PWRCTL_MIN	15128	As this is the reverse link power control minimum value, this value is set in case that critical value is less than this value.
PWRCTL_UP_FULL	3072	As this is the power control increment value out of Full/Half rate, use this to increase of the power during the full rate run.
PWRCTL_UP_ ERASURE	248	As this is the power control increment value out of Eight/Quarter rate, use this to increase the power when the number of consecutive erasure frames is more than pwrctl_erasure_run_lim value during the erasure run.
PWRCTL_UP_ ERASURE_LITTLE	50	As this is the power control increment value out of Eight/Quarter rate, use this to decrease the power when the number of consecutive erasure frames is less than pwrctl_erasure_run_lim during the erasure run.
PWRCTL_DOWN	32	As this is the power control decrement value out of Full/Half rate, use this to decrease of the power during the full rate run.
PWRCTL_VAR_ DOWN	4	The power control critical decrement value during the Quarter/Eighth rate Conversation State.
PWRCTL_FULL_ WAIT	1	The number of waiting frames after appications of PWRCTL_UP_PWR

ITEMS	RANGE	DESCRIPTION
PWRCTL_FULL_RUN_RESET	-2	The minimum number of consecutive full/half frames to to enter a full rate rate run.
PWRCTL_ERASURE_RUN_LIM	5	Determine the increment amount of power by this value, during the erasure run.

3.3.14 Base Station Cell Information

[BSMcmd : xx] DIS-SCEL-INFO:BTS=0,SECT=ALPHA,FA=0;
M5004 DISPLAY SUBCELL CONFIGURATION
BSC : 0 BCP : 0 BTS : 0 NAME : Grand

BTS_ID : 0
SECTOR_ID : ALPHA
CDMA_CH_ID : 0
SERVICE_ON_OFF : ON EQUIP_STATUS : EQP
COMMON_PILOT_EQUIP : NEQP T_ADD : 28
T_DROP : 32 T_COMP : 5
T_TDROP : 2 SRCH_WIN_A : 6
SRCH_WIN_N : 7 SRCH_WIN_R : 8
PWR_REPT_THRESH : 3 PWR_REPT_FRAME : 7
PWR_THRESH_ENABLE : ENABLE PWR_PERIOD_ENABLE : ENABLE
PWR_REPT_DELAY : 5

ITEMS	RANGE	DESCRIPTION
BTS_ID	0 ~ 511	Base Station ID
SECTOR_ID	0 ~ 2	Sector ID
CDMA_CH_ID	Refer to 3.3.4	CDMA channel ID
SERVICE_ON_OFF	0 ~ 1	Service On/Off of corresponding to Subcell. (0 : off, 1 : On)

ITEMS	RANGE	DESCRIPTION
EQUIP_STATUS	0 ~ 1	Setting Equip state. 0 : N_EQUIP, 1 : EQUIP
COMMON_PILOT_ EQUIP	0 ~ 1	Setting Equip state of common pilot at Base Station or not.
T_ADD	0 ~ 63	Pilot detection threshold. The Mobile Station compares this value with a certain pilot. If a certain pilot value is larger than this value, a cell of having it becomes cell of the candidate set. And a cell of having it sends pilot strength measurement message to active cell.
T_DROP	0 ~ 63	Pilot drop threshold. The mobile station compares this value with current candidate or active pilot. If its value is less than this value, the mobile station operates the handoff drop timer.
T_COMP	0 ~ 15	Active set versus Candidate set comparison threshold. If the strength of a Candidate Set pilot exceeds the strength of an Active Set pilot by t_comp*0.5, the mobile station send base station to pilot strength measurement message to base station.
T_TDROP	0 ~ 15	Drop timer value. If pilot of Active set is less than t_drop, and exceeds the time, the mobile station sends pilot strength measurement message to base station.
SRCH_WIN_A	0 ~ 127	This is the search window size when searching pilot of the base station, which are defined as active set.
SRCH_WIN_N	0 ~ 127	This is the search window size when searching pilot of the base station, which are classified as a Neighbor set.

ITEMS	RANGE	DESCRIPTION
SRCH_WIN_R	0 ~ 127	This is the search window size when searching pilot of the base station, which are classified as a remaining set.
PWR_REPT_ THRESH	0 ~ 31	If the bad frame numbers of forward frame exceed this value, the mobile station sends Power Measurement Report Message to base station.
PWR_REPT_ FRAME	0 ~ 31	If pwr_period_enable is '1', mobile station sends Power Measurement Report Message periodically to base station.
PWR_THRESH_ ENABLE	0 ~ 1	If the power in mobile station exceed pwr_rept_thresh, mobile station sets Power Measurement Report Message to whether to send or not to base station. 0 : DISABLE, 1: ENABLE
PWR_PERIOD_ ENABLE	0 ~ 1	This parameter is to set Power Measurement Report Message whether to send or not to base station from mobile station. 0: DISABLE, 1 : ENABLE
PWR_REPT_DELAY	0 ~ 31	This is the period that the mobile station do not count received frame or bad frame after the mobile station sends Power Measurement Report Message to base station.

3.3.15 Corresponding Sector Information of BTS

```
[ BSMcmd : xx ] DIS-SECT-INFO:BTS=0,SECT=BETA;
M5001 DISPLAY SECTOR CONFIGURATION
   BSC : 0    BCP : 0    BTS : 0     NAME : Grand

BTS_ID          : 0        SECTOR_ID          : BETA
EQP_STS         : EQP      BLK_STS            : UBLK
```

PILOT_OFFSET : 120 TX_FINE_ADJ : 153
TX_COARSE_ADJ : 0 RX_FINE_ADJ : 4096
RX_COARSE_ADJ : 15 COMMON_RTD_THRESH : 0
MAX_SLOT_CYCLE_INDEX : 1 P_REV : 1
P_MIN_REV : 1

ITEMS	RANGE	DESCRIPTION
BTS_ID	0 ~ 511	Base Station ID
SECTOR_ID	0 ~ 2	Sector Identification Alpha = 0, Beta = 1, Gamma = 2
EQP_STS	0 ~ 1	Setting up Equip state 0 : N_EQUIP, 1 : EQUIP
BLK_STS	0 ~ 4	Setting up Block state 0 : M_UBLK, 1 : M_BLK, 2 : T_BLK 3 : T_UBLK, 4 : F_BLK
TX_FINE_ADJ	0 ~ 65535	Transmitted timing advanced fine adjust. (Forward link hardware delay time) This value adjusts to be synchronized of sending signal from Tx antenna and system time.
TX_COARSE_ ADJ	0 ~ 255	Transmitted timing advanced coarse adjust. (Forward link hardware delay time) This value is used for frame staggering besides PN state loading timing adjustment or frame timing adjustment .

ITEMS	RANGE	DESCRIPTION
RX_FINE_ADJ	0~ 65535	Receiver timing advanced fine adjust. (Reverse link hardware delay time) The frame boundary which is outputted from Demodulator ASIC are delay more than system time because of signalling processing time such as symbol combining. Therefore, the deinterleaver of modulator ASIC which processes this output process signals on the basis of frame boundary equal to this output. This parameter is set to compensate delayed time.
RX_COARSE_ ADJ	0 ~ 255	Receive timing advanced coarse adjust. (Reverse link hardware delay time) This value is used for frame staggering besides deinterleaver frame timing adjustment and frame staggering.
COMMON_RTD_ THRESH	0 ~ ffffffff	Threshold value of Round Trip Delay.
MAX_SLOT_ CYCLE_INDEX	0 ~ 9	Maximum value of Slot Cycle Index.
P_REV	0 ~ 7	Protocol Revision Level
P_MIN_REV	0 ~ 7	Protocol Minimum Revision Level

3.3.16 Sync Channel Message

[BSMcmd : xx] DIS-SYNC-MSG:BTS=0,SECT=BETA,FA=0;

M5087 DISPLAY SYNC CHANNEL MESSAGE

BTS : 0(Grand) SECTOR : BETA CDMA_CH_INDEX : 0

P_REV : 1 MIN_P_REV : 1

SID : 2222 NID : 4

PILOT_PN : 120 LTM_OFF : 18
DAYLT : SAVING PRAT : 0(9600BPS)
CDMA_FREQ : 350

ITEMS	RANGE	DESCRIPTION
P_REV	0 ~ 7	Protocol Revision Level
P_MIN_REV	0 ~ 7	Protocol Minimum Revision Level
SID	0 ~ 32767	System ID Number
NID	0 ~ 65535	Network ID Number
PILOT_PN	0 ~ 511	Pilot PN offset of BTS
LTM_OFF	-24 ~ 24	Local time offset from UTC
DAYLT	0 ~ 1	0 = standard time, 1 = Daylight saving time flag
PRAT	0 ~ 4	Paging channel data rate (Actually 0 or 1 allowed.) 0 : 9600bps, 1 : 4800bps, 2 : 2400bps, 3 : 1200bps
CDMA_FREQ	1 ~ 1023	CDMA Channel Number corresponding to transmission frequency.

3.3.17 System Parameter

[BSMcmd : xx] DIS-SYS-PARA:BTS=0,SECT=GAMMA,FA=0;
M5006 DISPLAY SYSTEM PARAMETER
BSC : 0 BCP : 0 BTS : 0 NAME : Grand

BTS_ID : 0
SECTOR_ID : GAMMA
CDMA_CH_ID : 0
TOTAL_ZONES : 3 ZONE_TIMER : 3
HOME_REG : 1 FOR_NID_REG : 1
FOR_SID_REG : 1 POWER_UP_REG : 1
POWER_DOWN_REG : 1 PARAMER_REG : 1
REG_PERIOD : 02 MIN REG_DISTANCE : 0
RESCAN : 0 MULT_SIDS : 0

MULT_NIDS	: 0	EXT_SYS_PARAMETER	: 1
EXT_NGHBR_LIST	: 1	GLOBAL_REDIRECT	: 0
BCAST_INDEX	: 0	REDIRECT_ACCOLC	: 0

ITEMS	RANGE	DESCRIPTION
BTS_ID	0 ~ 511	Base Station ID
SECTOR_ID	0 ~ 2	Sector ID
CDMA_CH_ID	Refer to 3.3.4	Maximum permission Channel ID
TOTAL_ZONES	0 ~ 7	Number of registration zones to be retained by mobile station.
ZONE_TIMER	0 ~ 7	This is the length of the zone registration timer to be used by mobile stations. It is an integer number between 0 and 7.
HOME_REG	0 ~ 1	This parameter determines whether mobile stations, which are not roaming and have MOB_TERM_HOME equals to '1', are to be enabled for autonomous registration.
FOR_NID_REG	0 ~ 1	This parameter determines whether mobile stations , which is foreign NID roamers and has MOB_TERM_FOR_NID equal to '1', is to be enabled for autonomous registration.
FOR_SID_REG	0 ~ 1	This parameter determines whether mobile stations, which is foreign SID roamers and has MOB_TERM_FOR_SID equal to '1', is to be enabled for autonomous registration.
POWER_UP_REG	0 ~ 1	Power-up registration indicator This is a parameter that mobile stations enabled for autonomous registration are to register immediately after powering on and receiving the system overhead messages.

ITEMS	RANGE	DESCRIPTION
POWER_DOWN_ REG	0 ~ 1	Power-down registration indicator This is a parameter that mobile stations enabled for autonomous registration are to register immediately before powering down.
PARAMER_REG	0 ~ 1	Parameter change registration indicator
REG_PERIOD	0, 29 ~ 85	Registration period If mobile station is not to perform timer-based registration, the base station shall set this field to '0'.
REG_DISTANCE	0 ~ 1	If mobile station performs distance-based registration, the base station shall set this field to the minimum distance which the mobile station should re-register.
RESCAN	0 ~ 1	Rescan Indicator
MULT_SIDS	0 ~ 1	Multiple System Ids Storage Indicator
MULT_NIDS	0 ~ 1	Multiple Network Ids Storage Indicator
EXT_SYS_ PARAMETER	0 ~ 1	This parameter determines whether the base station send Extended System Parameter Message to mobile station. 0 : No, 1 : Yes
EXT_NGHBR_LIST	0 ~ 1	This parameter determines whether the base station send Extended Neighbor List Message to mobile station. 0 : No, 1 : Yes
GLOBAL_ REDIRECT	0 ~ 1	This parameter determines whether the base station send mobile station to Global Service Redirection Message. 0 : No, 1 : Yes
BCAST_INDEX	0 ~ 1	Broadcast Slot Cycle Index. 0 : Disable, others : value

ITEMS	RANGE	DESCRIPTION
REDIRECT_ ACCOLC	0 ~ 1	Redirected access overload class This field is composed of subfield between ACCESS OVERLOAD CLASS 0 (1 Bit) and ACCESS OVERLOAD CLASS 15.

3.3.18 System Parameter Message

[BSMcmd : xx] DIS-SYSPARA-MSG:BTS=0,SECT=BETA,FA=0;
M5088 DISPLAY SYSTEM PARAMETER MESSAGE
BTS : 0(Grand) SECTOR : BETA CDMA_CH_INDEX : 0

PILOT_PN : 120 SID : 2222
NID : 4 REG_ZONE : 3
TOTAL_ZONE : 3 ZONE_TIMER : 3
MULT_SIDS : 0 MULT_NIDS : 0
BASE_ID : 0 BASE_CLASS : 1
PAGE_CHAN : 1 MAX_SLOT_CYC_IDX : 1
HOME_REG : 1 FOR_SID_REG : 1
FOR_NID_REG : 1 POWER_UP_REG : 1
POWER_DOWN_REG : 1 PARAMETER_REG : 1
REG_PRD : 44 BASE_LAT : 0
BASE_LOGN : 0 REG_DIST : 0
SRCH_WIN_A : 6 SRCH_WIN_N : 7
SRCH_WIN_R : 8 NGHBR_MAX_AGE : 0
PWR_REP_THRESH : 3 PWR_REP_FRAMES : 7
PWR_THRESH_ENABLE : ENABLE PWR_PERIOD_ENABLE : ENABLE
PWR_REP_DELAY : 5 RESCAN : 0
T_ADD : 28 T_DROP : 32
T_COMP : 5 T_TDROP : 2
EXT_SYS_PARAM : 1 EXT_NGHBR_LIST : 1
GLOBAL_REDIRECT : 0

ITEMS	RANGE	DESCRIPTION
PILOT_PN	0 ~ 511	Pilot PN sequence offset index of BTS
SID	0 ~ 32767	System ID number
NID	0 ~ 65535	Network ID number
REG_ZONE	0 ~ 127	Registration Zone Number of base station
TOTAL_ZONE	0 ~ 7	Maximum number of registration zones for mobile station to be retained
ZONE_TIMER	0 ~ 7	This is the length of the zone registration timer to be used by mobile stations. It is an integer number between 0 and 7.
MULT_SIDS	0 ~ 1	Multiple System IDs Storage Indicator
MULT_NIDS	0 ~ 1	Multiple Network IDs Storage Indicator
BASE_ID	0 ~ 511	Base Station ID
BASE_CLASS	0 ~ 1	Band Class 0 : 800MHz Cellular Band 1 : 1.8 ~ 2.0 GHz Band
PAGE_CHAN	1 ~ 7	Paging channel number
MAX_SLOT_CYC_IDX	0 ~ 9	Maximum slot cycle index
HOME_REG	0 ~ 1	Home registration indicator. This parameter determines whether mobile stations, which is not roaming and has MOB_TERM_HOME value of '1', is to be enabled for autonomous registration.
FOR_NID_REG	0 ~ 1	NID roamer registration indicator. This parameter determines whether mobile stations that are foreign NID roamers and have MOB_TERM_FOR_NID value of '1', are to be enabled for autonomous registration.

ITEMS	RANGE	DESCRIPTION
FOR_SID_REG	0 ~ 1	SID roamer registration indicator This parameter determines whether mobile stations that are foreign SID roamers and have MOB_TERM_FOR_SID value of '1', are to be enabled for autonomous registration.
POWER_UP_REG	0 ~ 1	Power-up registration indicator This is a parameter that mobile stations enabled for autonomous registration are to register immediately after powering on and receiving the system overhead messages.
POWER_DOWN_REG	0 ~ 1	Power-down registration indicator This is a parameter that mobile stations enabled for autonomous registration are to register immediately before powering down.
PARAMETER_REG	0 ~ 1	Parameter change registration indicator
REG_PRD	0, 29 ~ 85	Registration period If mobile station is not to perform timer-based registration, the base station shall set this field to '0'.
BASE_LAT	0 ~ 4194304	Base station latitude
BASE_LOGN	0 ~ 8388608	Base station longitude
REG_DIST	0	If mobile station performs distance-based registration, the base station shall set this field to the minimum distance which the mobile station is to re-register.
SRCH_WIN_A	0 ~ 127	This is the search window size to be used by mobile stations for the active set in case of searching for the base station pilot.

ITEMS	RANGE	DESCRIPTION
SRCH_WIN_N	0 ~ 127	This is the search window size to be used by mobile stations for the neighbor set in case of searching for the base station pilot.
SRCH_WIN_R	0 ~ 127	This is the search window size to be used by mobile stations for the remaining set in case of searching for the base station pilot.
NGHBR_MAX_AGE	0 ~ 7	Set this field to the maximum AGE value which mobile stations drop members from the Neighbor Set.
PWR_REP_THRESH	0 ~ 31	Set this field to the number of bad frames to be received in a measurement period before mobile stations are to generate a Power Measurement Report Message.
PWR_REP_FRAMES	0 ~ 31	Set this field to the value such that the number given by [$2^{(PWR\_REP\_FRAMES)}$ X 5] frames is the number of frames over which mobile stations are to count frame errors. If the pwr_period_enable is '1', the mobile station sends power measurement report message to base station, each receiving a calculated frames.
PWR_THRESH_ ENABLE	0 ~ 1	This parameter determines whether mobile station sends power measurement message to base station, when mobile station power exceeds pwr_rep_thresh parameter value. 0 : DISABLE 1 : ENABLE

ITEMS	RANGE	DESCRIPTION
PWR_PERIOD_ ENABLE	0 ~ 1	This parameter determines whether mobile station sends Power Measurement Report Message to base station, periodically. 0 : DISABLE 1 : ENABLE
PWR_REP_DELAY	0 ~ 31	The period that mobile stations wait following a Power Measurement Report Message before restarting frame counting for power control purposes.
RESCAN	0 ~ 1	This flag determine whether mobile stations are to re-initialize and re-acquire.
T_ADD	0 ~ 63	Pilot detection threshold The mobile station compares this value with a certain pilot. If a certain pilot value is more than this value, a cell of having it becomes cell of the candidate set. And a cell of having it sends Pilot Strength Measurement Message to active cell.
T_DROP	0 ~ 63	Pilot drop threshold The mobile station compares this value with current candidate or active pilot. If its value is less than this value, the mobile station operates the handoff drop timer.
T_COMP	0 ~ 15	Active set versus Candidate set comparison threshold If the strength of a candidate set pilot exceeds the strength of an active set pilot by t_comp*0.5, the mobile station sends base station to Pilot Strength Measurement Message.

ITEMS	RANGE	DESCRIPTION

T_TDROP	0 ~ 15	Drop timer value. While t_tdrop timer exceed, if the strength of an active set pilot has not become greater than t_drop, the mobile station sends pilot strength measurement message to base station.
EXT_SYS_PARAM	0 ~ 1	This parameter determines whether the base station sends Extended System Parameter Message to mobile station. 0 : No 1 : Yes
EXT_NGHBR_LIST	0 ~ 1	This parameter determines whether the base station sends Extended Neighbor List Message to mobile station. 0 : No 1 : Yes
GLOBAL_REDIRECT	0 ~ 1	This parameter determines whether the base station sends Global Service Redirection Message to mobile station. 0 : No 1 : Yes

3.3.19 Traffic Channel Parameter

```
[ BSMcmd : xx ] DIS-TC-PARA:BTS=0,FA=0;
M5015 DISPLAY TRAFFIC CHANNEL PARAMETER
  BSC : 0    BCP : 0    BTS : 0     NAME : Grand

CDMA_CH_INDEX            : 0        NUM_DMDS                    : 4
  COMBINE_THRESH_SET1   : 70       COMBINE_THRESH_SET2          : 70
  LOCK_THRESH_SET1      : 2729   LOCK_THRESH_SET2               : 2739
  NOLOCK_THRESH_SET1: 2729   NOLOCK_THRESH_SET2            : 2729
PCTL_OUTER_LOOP_ENABLE   : 1        PCTL_THRESH_MAX_SET1     : 7683
PCTL_THRESH_MAX_SET2        : 7683   PCTL_THRESH_MIN_SET1      : 200
```

PCTL_THRESH_MIN_SET2 : 200 PCTL_THRESH_NOM_SET1 : 4000
PCTL_THRESH_NOM_SET2 : 4000 ACQ_WIN_LENGTH : 256
ACQ_WIN_PRD : 6 DEMOD_WIN_LENGTH : 384
DEMOD_INT_PERIOD : 6 TC_GAIN _SET1 : 50
TC_GAIN _SET2 : 50 QUALITY_THRE0 : 1
QUALITY_THRE1 : 1 QUALITY_THRE2 : 3
QUALITY_THRE3 : 3 FINGER_LOCK_INIT_ENERGY_SET1 : 2056
FINGER_LOCK_INIT_ENERGY_SET2 : 2056

ITEMS	RANGE	DESCRIPTION
CDMA_CH_INDEX	Refer to 3.3.4	CDMA channel number of BTS
NUM_DMDS	1 ~ 4	The number of Demod ASICs
COMBINE_THRESH_SET1	0 ~ 65535	If the accumulated and filtered energy of finger when finger is assigned as lock exceeds this value, use output energy of this finger to symbol combine process. Used in rate set 1.
COMBINE_THRESH_SET2	0 ~ 65535	If the accumulated and filtered energy of finger when finger is assigned as lock exceeds this value, use output energy of this finger to symbol combine process. Used in rate set 2.
LOCK_THRESH_SET1	0 ~ 65535	It is the threshold integer number counted by to_nolock_cnt in 0 - 65535 so that the finger in lock is to be out-of-lock. Used in rate set 1
LOCK_THRESH_SET2	0 ~ 65535	It is the threshold integer number counted by to_nolock_cnt in 0 - 65535 so that the finger in lock is to be out-of-lock. Used in rate set 2
NOLOCK_THRESH_SET1	0 ~ 65535	It is the threshold integer number counted by to_lock_cnt in 0 - 65535 so that the finger in out-of-lock is to be in-lock. Used in rate set 1

ITEMS	RANGE	DESCRIPTION

NOLOCK_THRESH_SET1	0 ~ 65535	It is the threshold integer number counted by to_lock_cnt in 0 - 65535 so that the finger in out-of-lock is to be in-lock. Used in rate set 1
PCTL_OUTER_LOOP_ENABLE	0 ~ 1	Whether reverse outer loop power control is enabled. The vocoder/selector sends traffic channel element to power control threshold to traffic channel element for reverse link outer loop power control, every 20msec. If this parameter value is '1', the traffic channel element uses the power control threshold given by Vocoder/Selector through appropriate process. If this parameter value is '0' the traffic channel element uses nominal value instead.
PCTL_THRESH_MAX_SET1	0 ~ 65535	Max. power control threshold used rate set1. Use this value when outer loop power control is enabled and the power control threshold given by the vocoder/selector is more than this value.
PCTL_THRESH_MAX_SET2	0 ~ 65535	Max. power control threshold used rate set2. Use this value when outer loop power control is enabled and the power control threshold given by vocoder/selector is more than this value.
PCTL_THRESH_MIN_SET1	0 ~ 65535	Min. power control threshold used rate set1. Use this value when outer loop power control is enabled and the power control threshold given by the vocoder/selector is less than this value.

ITEMS	RANGE	DESCRIPTION
PCTL_THRESH_MIN_SET2	0 ~ 65535	Min. power control threshold used rate set2. Use this value when outer loop power control is enabled and the power control threshold given by vocoder/selector is less than this value.
PCTL_THRESH_NOM_SET1	0 ~ 65535	Normal power control threshold used rate set1. Use this value when outer loop power control is enabled and no the power control threshold given by vocoder/selector is more than this value.
PCTL_THRESH_NOM_SET2	0 ~ 65535	Normal power control threshold used rate set2. Use this value when outer loop power control is enabled and no the power control threshold given by vocoder/selector is more than this value.
ACQ_WIN_LENGTH	0 ~ 4095	Acquisition search window length. An integer value between 0 and 4095 of window length which traffic channel should test when traffic channel element is assigned to mobile station from cell controller and acquisition. The traffic channel element searches the region that is acq_win_len / 2 on the basis of round trip delay received by cell controller.
ACQ_WIN_PRD	0 ~ 7	An integer value between 0 and 7 as the acquisition integration period.
DEMOD_WIN_LENGTH	0 ~ 65535	Demodulator search window length

DEMOD_INT_PERIOD	0 ~ 7	An integer value between 0 and 7 as the demodulator integration period.
ITEMS	RANGE	DESCRIPTION
TC_GAIN_SET1	0 ~ 127	Gain value of Traffic Channel (rate set 1)
TC_GAIN_SET2	0 ~ 127	Gain value of Traffic Channel (rate set 2)
QUALITY_THRE0	1	Threshold of Quality Indicator (Full Rate)
QUALITY_THRE1	1	Threshold of Quality Indicator (Half Rate)
QUALITY_THRE2	3	Threshold of Quality Indicator (Quarter Rate)
QUALITY_THRE3	3	Threshold of Quality Indicator (Eight Rate)
FINGER_LOCK_INIT_ENERGY_SET1	0 ~ 65535	The initial finger value when finger is assigned as lock. Used in rate set 1.
FINGER_LOCK_INIT_ENERGY_SET2	0 ~ 65535	The initial finger value when finger is assigned as lock. Used in rate set 2.

set1 : rate set 1 (9.6k, 4.8k, 2.4k, 1.2k)

set2 : rate set2 (14.4k, 7.2k, 3.6k, 1.8k)

3.4 Call Processing System

3.4.1 Overview

The call processing is the most important part of system. The call processing fault is very critical and the related block needs to be always in normal state. It needs to take emergency measure in the case of call fault.

3.4.2 Call Processing Flow

3.4.2.1 Call Processing Block

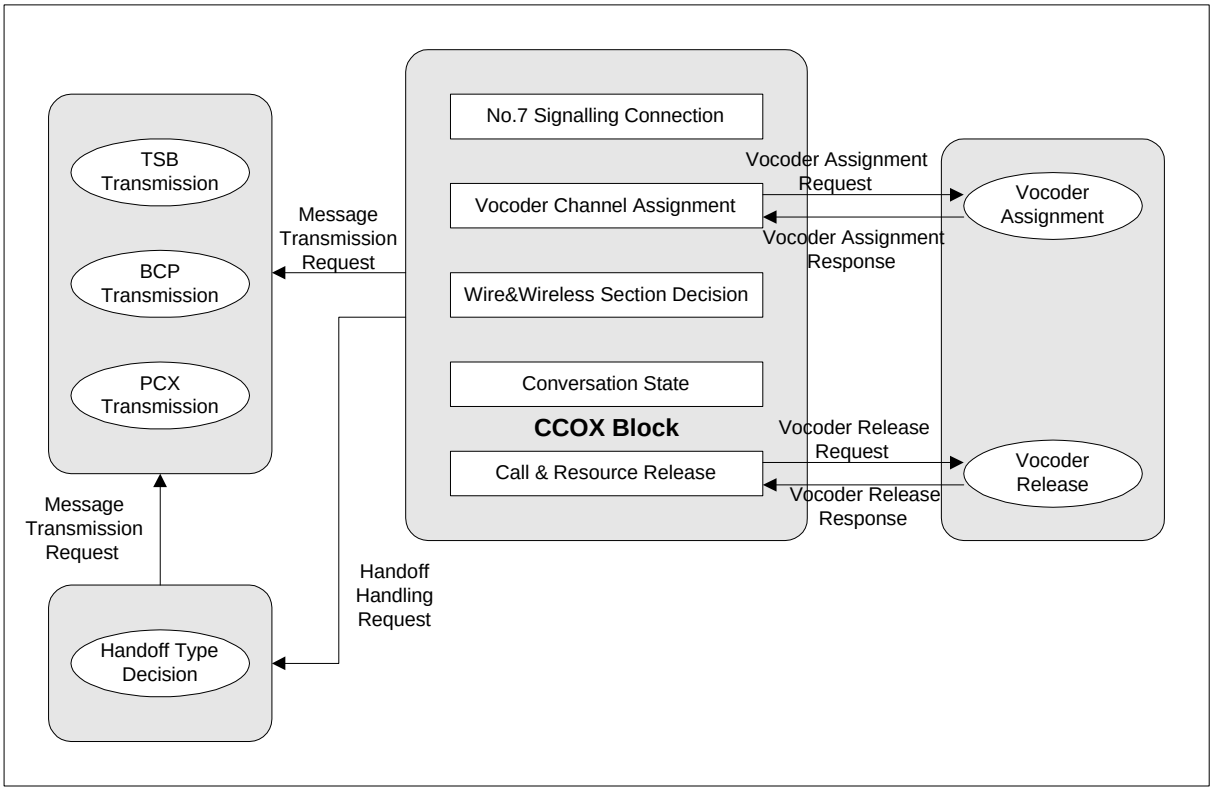

Figure 3.62 Call Processing Block Diagram

The explanation of the Call Processing Block is as follows. (Refer to Figure 3.62)

(1) The CCOX, that is call processing block, receives the mobile oriented call from base station. And, it allocates an available selector in basis of the received trunk information from MSC. The CCOX establishes the traffic channel path between MSC and mobile station after it setting the traffic channel up.

(2) The CCOX receives the paging message from MSC and informs mobile station of it. The CCOX allocates an available selector in basis of the information that MSC sent. The CCOX establishes the traffic path between MSC and mobile station after it setting the traffic channel up.

(3) Call is to be in progress after call setup process. CCOX releases call where it receives call release request from MS or MSC.

3.4.2.2 Flow of Mobile Origination Call

The Flow of Mobile Origination Call is equal as follows. (Refer to Figure 3.63)

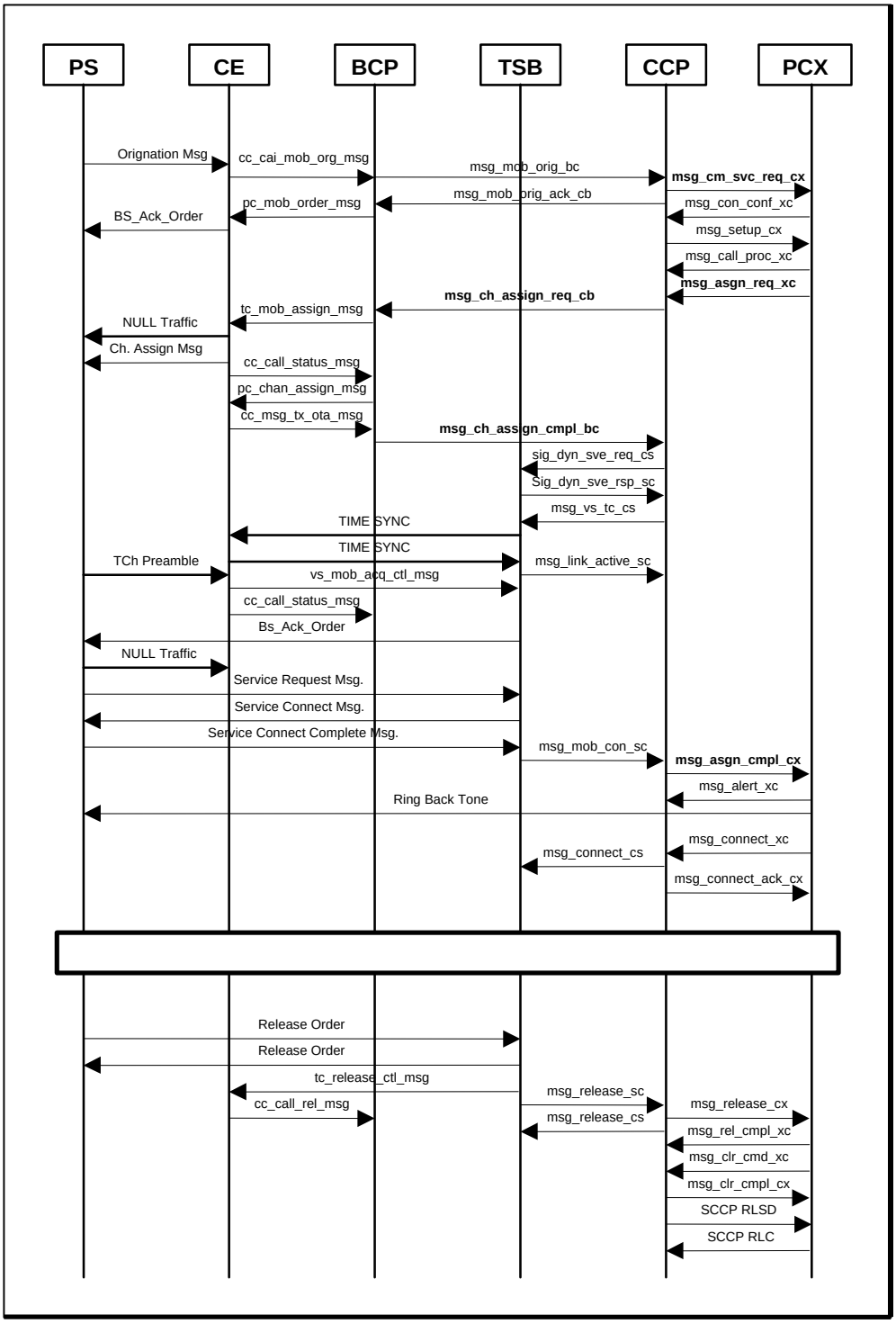

Figure 3.63 Flow of Mobile Origination Call

3.4.2.3 Flow of Mobile Termination Call

The Flow of Mobile Termination Call is equal as follows. (Refer to Figure 3.64)

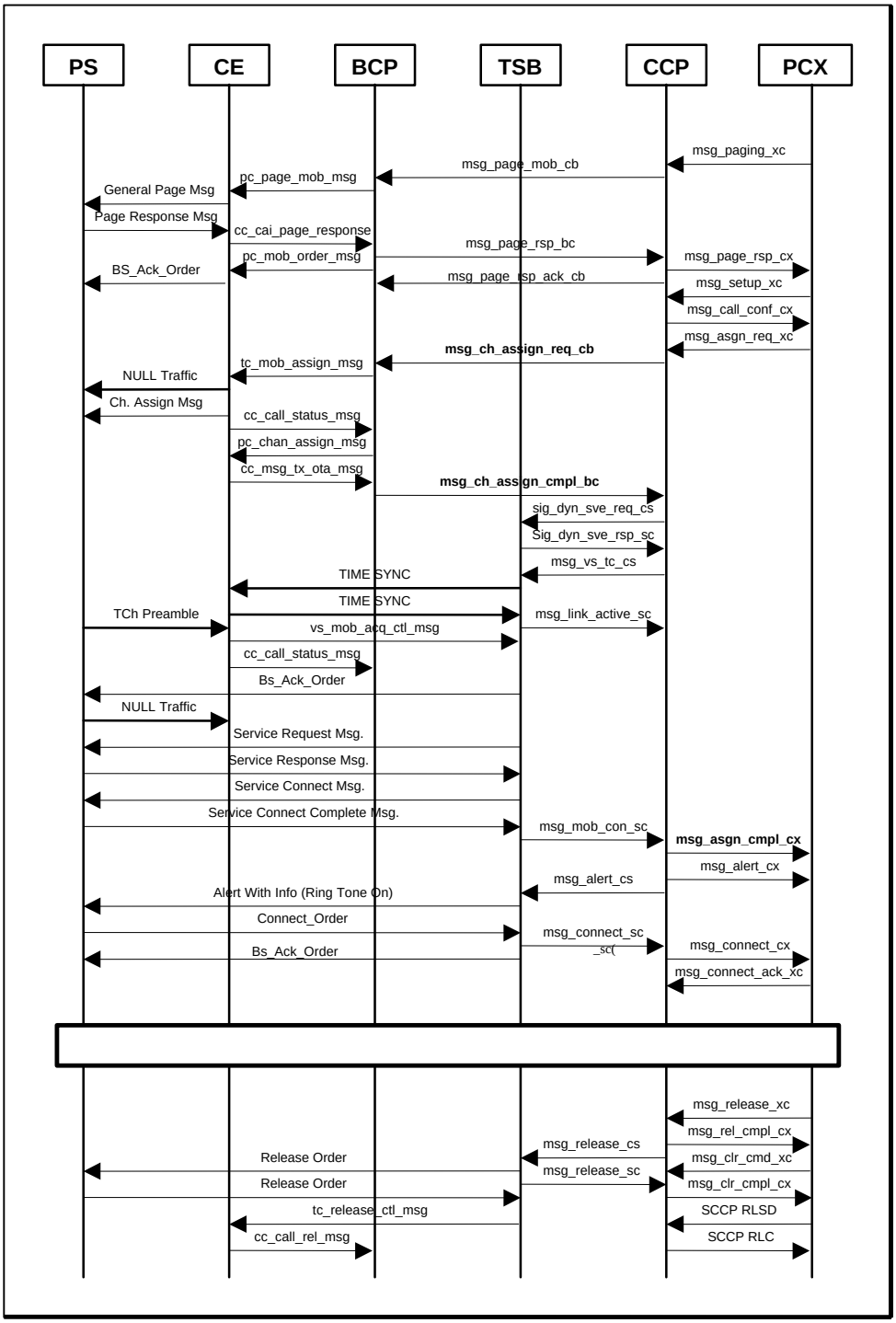

Figure 3.64 Flow of Mobile Termination Call

3.4.3 Call Trace

3.4.3.1 Call Processing Command

By typing some commands in CROS shell, several of information which are related to call control can be displayed such as call flow, call statistics, and diagnostics.

The general processing flow is as follows. (Refer to Figure 3.65)

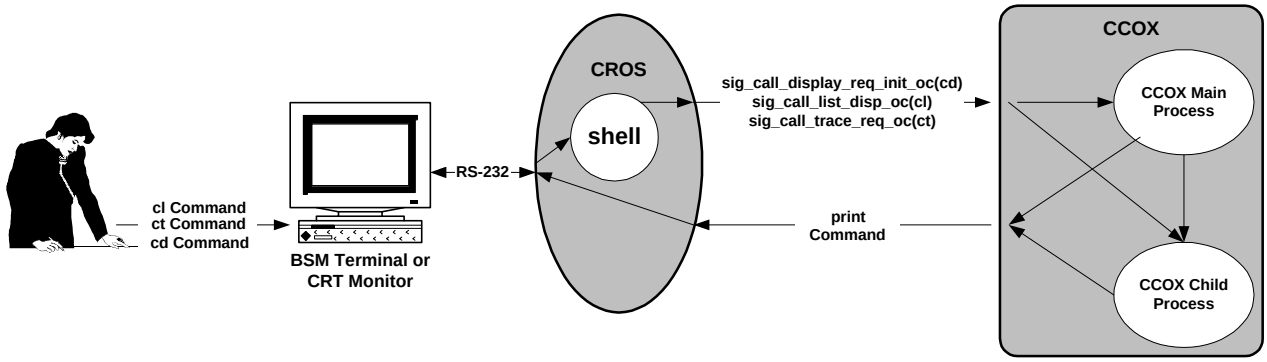

Figure 3.65 Flow of General Command Processing

By using console (FAST or rcu program operation on the BSM), user can order several command to shell connected to CCP (MCDA) through RS-232C cable. The shell analyzes the received command and sends the signal which is related with command to CCP. The CCOX Outmost process receives this signal and executes function requested by this signal.

3.4.3.1.1 Call List Command

It displays the origination call and termination call setup process, Handoff process, Registration process and statistics data, etc.

Usage : cl xx ('xx' is command option.)

(1) cl 0

It displays call id, IMSI, ESN and process id of call during servicing.

(2) cl 1

It displays call id, IMSI, ESN, and process id of call during servicing and tracing by call trace command.

(3) cl 2

It includes 'cl 0' and 'cl 1' function.

(4) cl 3

This is a Toggle Command. When it is ON, it displays call release in detail. It displays IMSI, ESN, Process Id, Cause, Call State, Handoff State, and Call Id of released call for the abnormal release when the specific call is released.

The abnormal call release is a call release expecting normal release, power down and mobile release.

(5) cl 4

This is a Toggle command. When it is ON, it displays all information. It executes all inserted print sentence.

(6) cl 5

This is a Toggle command. When it is ON, it displays data related to statistics.

(7) cl 6

It displays data that are collected about all errors by case.

- STATE : the number of occurrence that the call processing status out of the originated call, terminated call, Markov call and MSC hard Handoff call processing shall enter the undefined state on the ground of the Finite State Machine.
- MSG_ID : the number of occurrence that received the unexpected message at the specific State.
- VALUE : the number of occurrence that the data value get out of the defined scope.
- DIFF : Not Used
- SEND : the number of occurrence that fail when send BCP or TSB or MSC to the signal or message.
- ENCODE : the number of occurrence that the message type of source message mismatch or a specific field value mismatch to be encoding.
- DECODE : the number of occurrence that the message type of source message mismatch or a specific field value mismatch to be decoding.
- PROTOCOL : the number of occurrence that the value of specific field in the Signal or message do not define to standard in use as the interface between BSC and MSC.

- PORT : Not Used
- HO_TYPE : Not Used

(8) cl 7

It displays each release cause.

(9) cl 8

This is a Toggle command. If the registration flow is ON, it displays message flow which is related with mobile registration.

(10) cl 9

It displays IMSI and Child Process ID on servicing call.

(11) cl 10

It displays the number of traffic call, setup call and Null call.

(12) cl a

This is a Toggle command. When it is ON, it collects a statistics data every 10 sec. If it is OFF, it stops a statistics data collection.

(13) cl b

It displays a collected statistics data. It displays the statistics start time and end time and the statistics items

(14) cl c

It displays the statistics items which is related with the Softer Handoff. It displays the statistics start time and end time and the statistics items

(15) cl d

It displays the statistics items which is related with the Soft Handoff. It displays the statistics start time and end time and the statistics items

(16) cl e

It displays the statistics items which is related with the Hard Handoff. It displays the statistics start time and end time and the statistics items

(17) cl 14

This is a Toggle command. When it is ON, it displays this message length when the CCP send message to MSC.

(18) cl 15 :

It displays the call setup Time average of origination and termination call.

(19) cl 16

This is a Toggle command. When it is ON, it displays the Origination and Termination Call Setup time at the unit of milli second.

(20) cl 17

It displays the time elapsed after loading the CCOX. It displays the CCOX start time, current time and the time elapsed at the unit of year, month, day, hour, minute, and second.

(21) cl 18

If it receives an invalid message at specific state, it displays this message information.

(22) cl 19

It sets up Time Interval for counting of the number of signal received by CCOX outmost Process by using consecutive two 'cl' commands.

(23) cl 1a

It displays the number of signal received by CCOX Outmost Process during the interval time established use of 'c 19' command.

(24) cl 1b

It displays the Handoff Processing Time.

(25) cl 20

It displays the cause of Connection Refuse Cause (CREF) and cause value in corresponding to the CREF.

(26) cl 21

It displays the cause of Connection Release Cause (RLSD) and cause value in corresponding to the RLSD.

(27) cl 40

This is a Toggle command. When it is ON, it displays Call List message by BTS.

(28) cl 80

This is a Toggle command. When it is ON, it sets L-to-M to 8K.

(29) cl 87

This is a Toggle command. When it is ON, it changes loopback mode to voice loop mode.

(30) cl 88

This is a Toggle command. When it is ON, it sets up loopback mode.

(31) cl 99

It displays the status of DSP chips in TSB. (EQUIP, BUSY, BLOCK)

(32) cl aa

It displays the ON/OFF status of Toggle commands.

(33) cl b0

It displays the message use of Hard handoff each MSC with each 'cl' command.

(34) cl b1

This is a Toggle command. When it is ON, it displays the Handoff Required Message as the hex code.

(35) cl b2

This is a Toggle command. When it is ON, it displays the Handoff Request Message as the hex code.

(36) cl b3

This is a Toggle command. When it is ON, it displays the Handoff Assign(Target) Message as the hex code.

(37) cl b4

This is a Toggle command. When it is ON, it displays the Handoff Request Ack Message as the hex code.

(38) cl b5

This is a Toggle command. When it is ON, it displays the Handoff Failure Message as the hex code.

(39) cl b6

This is a Toggle command. When it is ON, it displays the Handoff Command Message as the hex code.

(40) cl b7

This is a Toggle command. When it is ON, it displays the Handoff Required Reject message as the hex code.

(41) cl b8

This is a Toggle command. When it is ON, it displays the Handoff Assign (serving) Message as the hex code.

(42) cl b9

This is a Toggle command. When it is ON, it displays the Handoff Commenced Message as the hex code.

(43) cl ba

This is a Toggle command. When it is ON, it displays the Handoff Complete Message as the hex code.

(44) cl bb

This is a Toggle command. When it is ON, it displays the Handoff Clear Command Message as the hex code.

(45) cl bc

This is a Toggle command. When it is ON, it displays the Handoff Clear Complete (Serving) Message as the hex code.

(46) cl bf

It displays the Toggle ON/OFF status of each command form 'cl b1' to 'cl bc'.

(47) cl da

It displays the tracing Signal Number and Message Number by using of 'cl da', 'cl db', and 'ct' command.

(48) cl db

It displays the Raw Data of Signal registered by 'ct' command as the hex code.

(49) cl dc

It displays the Raw Data of message registered by 'ct' command as the hex code.

(50) cl dd

It stops the signal trace and message trace.

(51) cl f0

It diagnoses the NO.7 Signaling Connection status. It generates child process for the testing of No.7.

It can be decided the No.7 Link as the normal, if it receives the CREF Message, that the Cause is 0, by MSC as the test result.

(52) cl ff

It displays the 'cl' command list.

3.4.3.1.2 Call Trace Command

The Call Trace Command is used for tracing the specific MIN number. The Call Trace command is a function that toggles the call processing flow and Handoff flow of the selected MIN number.

(1) a specific MIN number ON/OFF Command ('xxxxxxx' is MIN number.)

<Usage> ct xxxxxxx on/off

(2) call flow of specific MIN number Toggle Command ('xxxxxxx' is MIN number.)

<Usage> call xxxxxxx

(3) handoff flow of specific MIN number Toggle Command ('xxxxxxx' is MIN number.)

<Usage> ho xxxxxxx

3.4.3.1.3 Call Display Command

It displays the information which is related with the basic call information, resource occupancy state and handoff of call

3.4.4 Call Release Reason and State

If the call is released in call processing, the CCP in the BSC sends Call fault Message with the released call information to BSM. The call fault reason and state represent call release reason and call processing state.

3.4.4.1 Arrangement according to Release Reason

(1) MS/CE/BTS Release

1) REL_MOBILE_RELEASE
   It occurs in case that END key of MS is pressed and released.
2) REL_POWER_DOWN
   It occurs in case that Power key of MS is pressed and released, or battery of Mobile Station is run out.
3) REL_SI_LINK_FAIL
   It occurs when the data do not exchange between TSB and CE.
4) REL_MARKOV_REL
   Not Used
5) REL_TIMEOUT_CCP
   If the BCP doesn't receive ACK message from CCP after the BCP request ACK message to CCP in the call establishment, it occurs. In case that the BCP doesn't receive ACK message from CCP is as follows.
   - In case that the CCOX block is in abnormal operation.
   - In case that the BLINK between BTS and BSC is in abnormal operation.
   - In case of loss of message at the normal state.
6) REL_TIMEOUT_PC
   If the BCP doesn't receive ACK message from PCE after the BCP send Channel Assign message to PCE in the call establishment, it occurs.
   In case that the BCP doesn't receive ACK message from PCE is as follows.
   - In case the PCE is abnormal.
   - In case the Router Node/Cable between BCP and PCE is out of order.

7) REL_TIMEOUT_TC

If the BCP doesn't receive ACK message from TCE after the BCP send TCE assign message to TCE in the call establishment, it occurs.

In case that the BCP doesn't receive ACK message from TCE is as follows.

- In case the TCE is abnormal.
- In case Router Node/Cable between BCP and TCE is out of order.

8) REL_PRE_SERVICE

If Mobile Station requests call with ESN No. which is same as ESN No. in BCP DB data of old ESN No., new call setup is released .

- In case that the mobile station remains in call because of loss the air message after the mobile station releases.
- In case that the mobile station requests new call without the mobile station release in the call establishment.

9) REL_NOT_SETUP

During call processing in BCP, BCP swapping is not completed and call process is not completed.

10) REL_TEST_CALL

In case of normal release of Test call such as Markov or Loopback.

11) REL_DOWN_ACT_TFC

In case of TFC swapping in base station, all calls are released.

12) REL_TPTL

The Base station releases all calls when TPTL (Transmit Power Tracking Loop) is involved and the Base station stops call service until the TPTL operation completes.

(2) TSB Release

1) REL_SIGNAL_MSG_TOUT

In case that the message does not exchange properly between mobile station and TSB. If the TSB doesn't receive ACK message from mobile station after the TSB sends a specific message to mobile station, it occurs. If the TSB doesn't receive ACK message from mobile station during minimum 4 seconds, it occurs. Because the TSB resends specific message 10 times a unit of 400 milli-seconds. In case, the

Reverse Traffic Channel is decided out of order.

2) REL_CONTROL_MSG_TOUT

In case that the message isn't exchanged between Base station Traffic Channel Element and TSB. If the TSB doesn't receive ACK message from the base station traffic channel element after the TSB sends a specific message to the base station traffic channel element, it occurs. If the TSB doesn't receive ACK message from the base station traffic channel element for minimum 600 mili-seconds, it occurs. Because the TSB resends to specific message 3 times a unit of 200 mili-seconds. Call can not be released during handoff.

3) REL_BAD_FRAMES

In case of receiving 250 bad frames from mobile station. The cause is as follows.

- In case of releasing the call because of bad forward traffic channel.
- In case of bad Reverse Traffic Channel.
- In case of removing the battery of mobile station.

4) REL_MOB_NOT_ACQ

If it doesn't receive Mobile_Acquire message from base station traffic channel element in 5 minutes of the call establishment, it occurs. Also, it occurs at specific TCE because of H/W problem.

5) REL_TIME_SYNC_TOUT

If it doesn't receive Time Sync Packet from base station traffic channel element in 1 second of the call establishment, it occurs. That is, in case that the TSB doesn't receive ACK message to Time Sync Packet. Also, it is possible to occur by the Trunk problem between the Base Station and the Base Station Controller or a specific Vocoder.

6) REL_SO_REJECTED

In case that the Service Option does not agree between mobile station and TSB. In case that the mobile station release as the Service Option Reject. If the TSB sends undefined Service Option Number to mobile station, it occurs.

7) REL_SOFT_DROP

Not Used.

8) REL_INTRA_HARD

Not Used

9) REL_INTER_HARD

Not Used.

10) REL_FRAME_OFFSET_HARD

Not Used.

11) REL_INTER_MSC_HARD

Not Used.

12) REL_NO_MARKOV_SYNC

If mobile station and TSB do not exchange the valid Markov Frame in a constant time out of Markov call setup, it occurs. At the current system, the call isn't released as this cause.

13) REL_SO2_NO_SYNC

If mobile station and TSB do not exchange the valid Loopback Frame in a constant time out of Service Option 2 Call Setup, it occurs. The Service Option 2 Sync means to start point of Loop back statistic.

14) REL_NO_FRAMES

If it doesn't receive Traffic Frame from Traffic Channel Element for 2 seconds , it occurs. It can be the trunk problem between base station and base station controller or the base station traffic channel card is out of order.

15) REL_INVALID_VOCID

If the TSB receives Vs_Tc_Cs Message from CCP with the appropriate channel being used, the TSB sends NOK message to CCP. By this time the CCP does not release the call and reallocate the resource. If this state is occurred again, the CCP clear the call.

16) REL_SERV_NEGO_MSG_TOUT

In case that the Service Negotiation Procedure doesn't receive the Service Response Message or Service Connect Complete Message from mobile station within the defined time.

(3) CCP / MSC Release

1) RCV_MSG_TIME_OUT

In case that the CCP doesn't receive a specific message within the defined time, it occurs. That is,

- In case that the CCP doesn't receive the Link_Active_Sc within 10 seconds after

the CCP receives the Link_Active_Sc

- In case that the CCP doesn't receive the Mob_Connect_Sc within 10 seconds after the CCP receives the Link_Active_Sc
- In case that the CCP doesn't receive the Call_Proc_Xc within 10 seconds after the CCP sends Setup_Cx
- In case that the CCP doesn't receive the Alert_Xc within 60 seconds after the CCP receives Call_Proc_Xc
- In case that the CCP doesn't receive the Connect_Sc within 40 seconds after the CCP sends Alert_info_Cs
- In case that the CCP doesn't receive the Connect_Xc within 40 seconds after the CCP sends Alert_info_Cs

2) REL_DB_SEL_FAIL

In case that the Tuple status of the appropriate PLD is not 0xff, that is Not Equip, when handles each kind of data to read the PLD.

3) REL_OVERLOAD

It checks the overload of the Vocoder, TCE, CCP Processor, and BCP Processor in the status block at the originated call, terminated call and Handoff attempt. If they have overload, it stops the call attempt. If the CCP Overload is, it change to BTS Overload.

4) REL_VOC_SIP_UNAVAIL

In case that it fails to allocate the Vocoder resource when all IA resources of TSB Vocoder are Not Equip or Abnormal, or Block at the originated call, terminated call and Test Call setup.

5) REL_VOC_SVP_UNAVAIL

In case that it fails to allocate the Vocoder resource when all OA resources of TSB Vocoder are Not Equip or Abnormal, or Block at the originated call, terminated call and Test Call setup.

6) REL_VOC_SVE_UNAVAIL

In case that it fails to allocate the Vocoder resource when all DSP resources of TSB Vocoder are Not Equip or Abnormal, or Block at the originated call, terminated call and Test Call setup.

7) REL_TRK_UNAVAIL

The Trunk uses 24 channels T1 Trunks in case that it fails to allocate the Vocoder

resource when all Trunk resources are Not Equip or Abnormal, or Block at the originated call, terminated call and Test Call setup.

Actually, the status block reports IA status to Abnormal. So, the Release Reason is REL_VOC_SIP_UNVAIL.

8) TSB_BOARD_RESET

Not Used.

9) REL_MX_PROTOCOL_ERR

In case that a defined field value is mismatch in advance or gets out of a scope out of message received by MSC.

10) CPS_ALREADY_USED

Not Used.

11) REL_TER_DGT_ERR

In case that Called Digits of a receiving part are under a number of 2 figures at the originated call attempt.

12) NORMAL_REL

In case that the call is released normally by pressing the End Key of the opposite mobile station normally.

13) USER_BUSY

In case that the opposite subscriber is on busy.

14) USER_NO_ANSWER

In case that it doesn't receive the Connect message within 1 minutes after receiving the Alert message.

15) UNASSIGN_NUM

Not Used

16) POWER_DOWN

In case that the power is exhausted or power off by the opposite Party

17) ABN_REL

In case of the Mlink fail, Handoff fail and Processor down, etc.

18) CREF

The NOK toward to Setup Cx as the simpler form for the Connection Refuse.

If the appropriate mobile station is not the mobile station registered or occurs the each kind of alarm in the MSC, it occurs. If the given Trunk Channel for call processing at BSC is Block, it occurs.

19) MSC_RESET

In case that MSC can not process the call any more because of reseting the MSC for some reason or other.

20) REL_TC_UNAVAIL

In case that it can not allocate the TCE resource because there is no available TCE resources during the originated call and terminated call attempt.

21) REL_CODE_CH_UNAVAIL

In case of no available the Code Channel at the originated and terminated call attempt, the BCP prevents the call attempting to the CCP and sending CCP to Reason message.

22) REL_FRAME_OFFSET_UNAV

In case of no available the Frame Offset at the originated and terminated call attempt, the BCP prevents the call attempting to the CCP and sending CCP to Reason message.

23) REL_ALL_BLINK_UNAV

In case of unavailable for the Blink at the originated and terminated call attempt, the BCP prevents the call attempting to the CCP and sending CCP to Reason message.

24) REL_BTS_OVLD_STS

If the load of the CCP or BCP Processor occurs more than threshold or occurs the CCP Overload , it decides the BCP Overload.

In this case, the BCP prevents the call attempting to the CCP and sending CCP to Reason message.

25) REL_HOFF_FAIL

Handoff Failure

26) REL_SENDSIG_FAIL

In case that the transmission of message is failed by the IPC block appearance or the appropriate Destination Address mistake or killed status of the Destination Process when the CCP sends MSC, TSB, BCP to message.

27) REL_FULL_ACT_CELL

In case that it can not be to add the PN pilot in the Active set because the base station has 3 PN pilots in the Active set at the Handoff operation.

28) REL_HOFF_NBR_DATA_ERR

In case that the BTS_ID of Reference PN pilot is equal to the BTS_ID of PN pilot to be add at the Soft Handoff operation.

29) REL_MSG_DATA_ERR

In case that the BCP sends CCP to UNDEFINED_ALLOC_MODE after the BCP is received the undefined Alloc Mode at the Handoff operation.

30) REL_TEST_CALL_NO_RSP

In case of no response toward to the Paging at the Markov or Loopback is equal to Test Call attempt.

3.4.4.2 Call State

The Call State Flow of the Call Processing is as follows. (Refer to Figure 3.66)

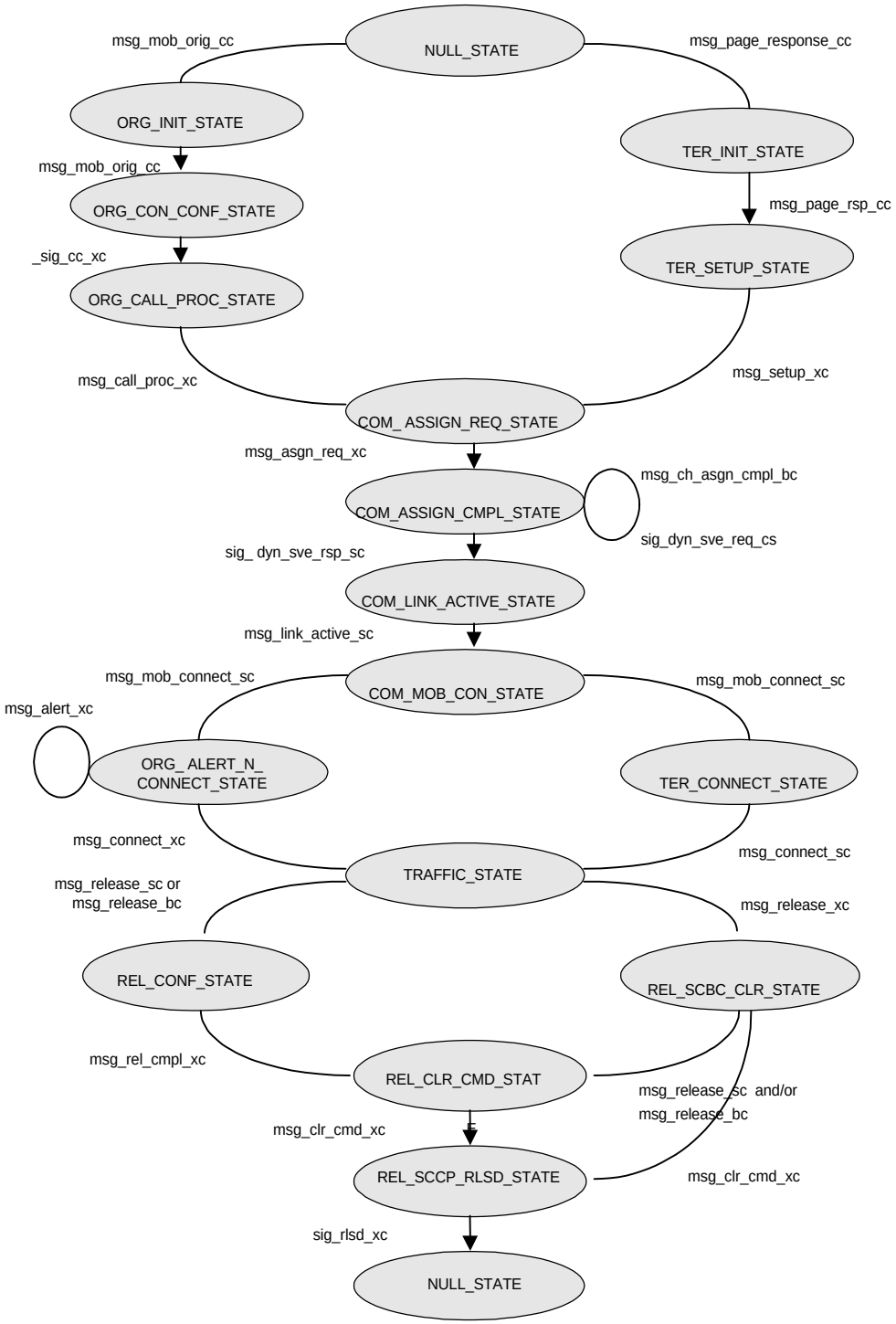

Figure 3.66 Call State Flow

(1) NULL_ STATE

Initialization State : If the Origination Message is received at Initialization State, the CCP shall enter the ORG_INIT_STATE. Upon entering the ORG_INIT_STATE, the Child process is generated by Main process and the Main process send the Origination Message to the Child process.

(2) ORG_INIT_STATE

The CCP shall enter the ORG_CON_CONF_STATE after the CCP store the received origination information and send Acknowledge to BCP toward to the Origination Message and send the CM Service Request Message to MSC.

(3) ORG_CON_CONF_STATE

The CCP sends the Authentication Request Message to BCP after it receives the Authentication Request Message from MSC. If the CCP is received the Authentication Challenge Response from the mobile station by BCP, the CCP sends MSC to the Authentication Response Message. The MSC sends to the Setup Message after receives the Authentication Response Message from CCP.

(4) ORG_CALL_PROC_STATE

If the CCP receives the Call Proceeding Message from MSC, the CCP stores the Alerting Information and shall enter the ORG_CALL_PROC_STATE.

(5) TER_INIT_STATE

If the CCP receives the Paging Response Message from BCP, the CCP shall enter the TER_INIT_STATE after sending BCP to the Paging Response Ack and sends MSC to the Paging Response Message.

(6) TER_SETUP_STATE

If the CCP receives the Setup Message from MSC, the CCP shall enter the COM_ASSIGN_REQ_STATE after storing the Alert information and send MSC to the Call Confirmation Message.

(7) COM_ASSIGN_REQ_STATE

If the CCP receives the Assignment Request Message from MSC, the CCP shall enter the COM_ASSIGN_CMPL_STATE after storing the Trunk information and Service Option information and send the Channel Assignment Request Message to BCP.

(8) COM_ASSIGN_CMPL_STATE

The CCP stores the Channel Allocation information from BCP and send TSB to the Dynamic SVE Request Message. If the CCP receives the Dynamic SVE Response

Message from TSB toward to the Dynamic SVE Request Message, the CCP shall enter the COM_LINK_ACTIVE_STATE after sending the Vs Tc Message to TSB.

(9) COM_LINK_ACTIVE_STATE

If the CCP receives the message, that the message activated , from TSB, the CCP shall enter the COM_MOB_CON_STATE.

(10) COM_MOB_CON_STATE

The CCP stores the Service Configuration conferred and send the Assignment Complete Message to MSC.

If it is the Origination Call , the CCP shall enter the ORG_ALERT_N_CONNECT_ STATE. If it is not the Origination Call, the CCP waits the Transcoder Control Message to be receive from MSC. If the CCP receives the Transcoder Control Message from MSC, the CCP shall enter the TRAFFIC_STATE after the CCP store the Transcoder Mode information and sends the Acknowledge Message to MSC and Alert Message and sends the Alert Info Message to TSB.

(11) ORG_ALERT_N_CONNECT_STATE

If the CCP receives the Alerting Message from MSC, the CCP wait the Connect Message to be receive from MSC after send the Alert with Information Message to TSB. If the CCP receives the Alert with Information Message from MSC, the CCP shall enter the TRAFFIC_STATE after send Connect Acknowledge Message to MSC and send the Connect Message to TSB.

(12) TER_CONNECT_STATE

If the CCP receives the Connect Message from TSB, the CCP sends the Connect Message to MSC and waits to the Connect Ack Message. If the CCP is received the Connect Ack Message, the CCP shall enter the TRAFFIC_STATE.

(13) TRAFFIC_STATE

A practical data is transferred. And if the CCP receives the Release Message from TSB, the CCP shall enter the REL_CONF_STATE. If the CCP receives the Release Message from MSC, the CCP shall enter the REL_SCBC_CLR_STATE.

(14) REL_CONF_STATE

The CCP receives the Release Complete Message from MSC, the CCP shall enter the REL_CLR_CMD_STATE.

(15) REL_SCBC_CLR_STATE

If the CCP receives the Release Message from TSB, the CCP shall enter the

REL_CLR_CMD_STATE.

(16) REL_CLR_CMD_STATE

If the CCP receives the Clear Complete Message from MSC, the CCP sends the Clear Complete Message to MSC and the CCP completes the call.

If the CCP receives the RLSD Message from MSC, the CCP completes the call

(17) REL_SCCP_RLSD_STATE

Not Used

Chapter 4. BSC References

4.1 Rack Configuration

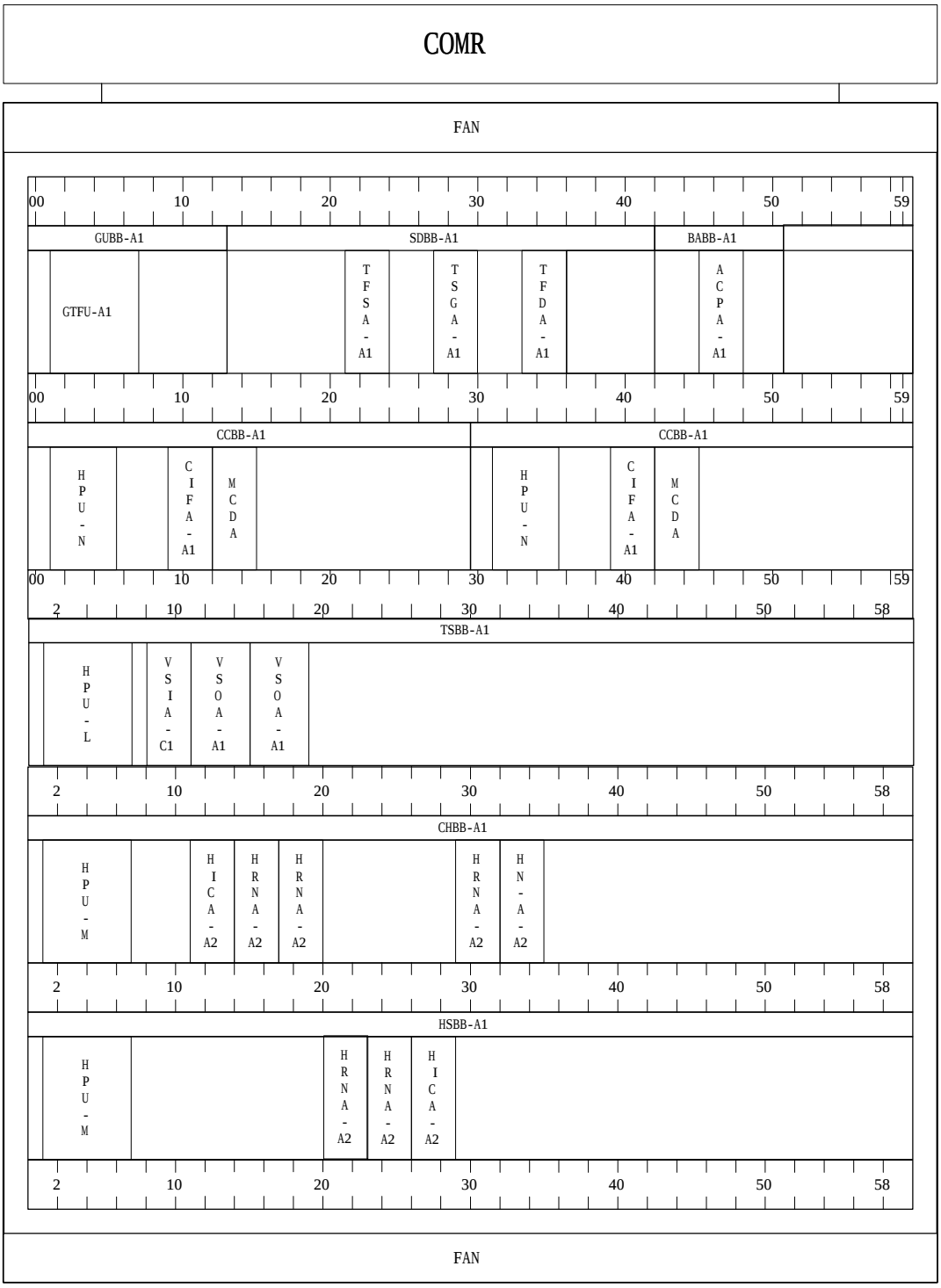

4.2 DIP Switch & Strap

4.2.1 Summary

This section data provides setting method of STRAP/DIP SWITCH for system based on strap drawing.

4.2.2 Purpose

The purpose of this section is to provide correct usage and setting method to set of DIP switch and jumper switch on Back Board and on PBA when set up and to notify caution required during setting.

4.2.3 Address setting in common

- Pin number starts from left on Board as 1
- Deletion of shunt means “1” and insertion of shunt means “0”
- OFF state of DIP switch means “1” and ON state of DIP switch means “0”

Place the switch as ON state (i.e., When Move Up or Right) means “0”

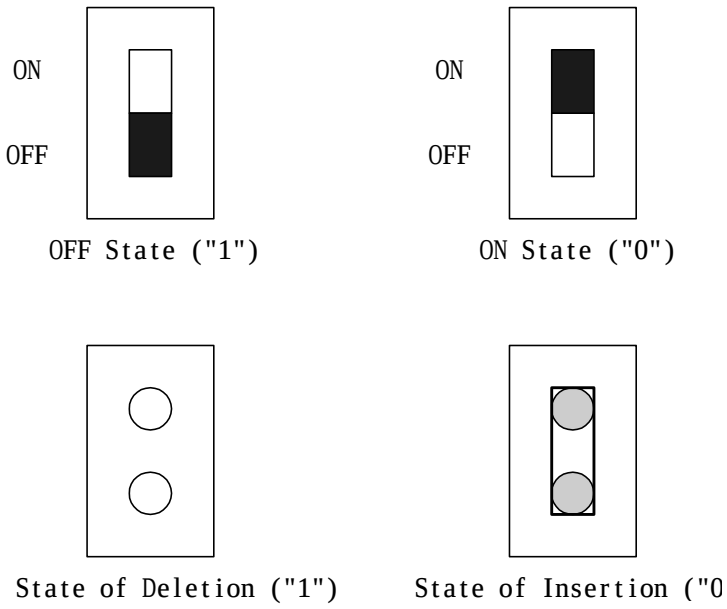

4.2.4 MCDA (Main Control & Duplication Board Assembly)

4.2.4.1 Mounting Drawing

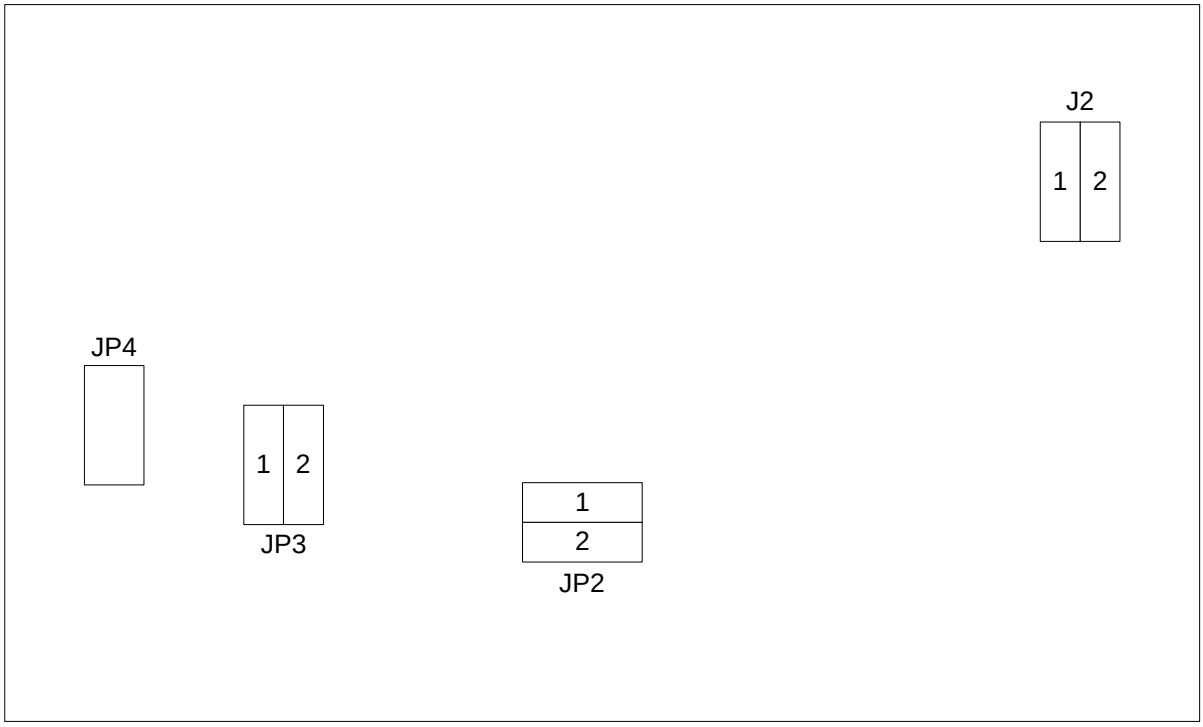

4.2.4.2 Setting

No.	Description	Normal Config.
JP2	Set CROUT(OS Running Time Out Period) 1. 1.38 sec 2. 2.76 sec	2-ON
JP3	Set MFP Operation Clock 1. 3.9MHz 2. 3.039MHz	2-ON
JP4	JTAG	
J2	2. GND	2-ON

4.2.5 CIFA-A1 (CIN Interface Function board Assembly-A1)

4.2.5.1 Mounting Drawing

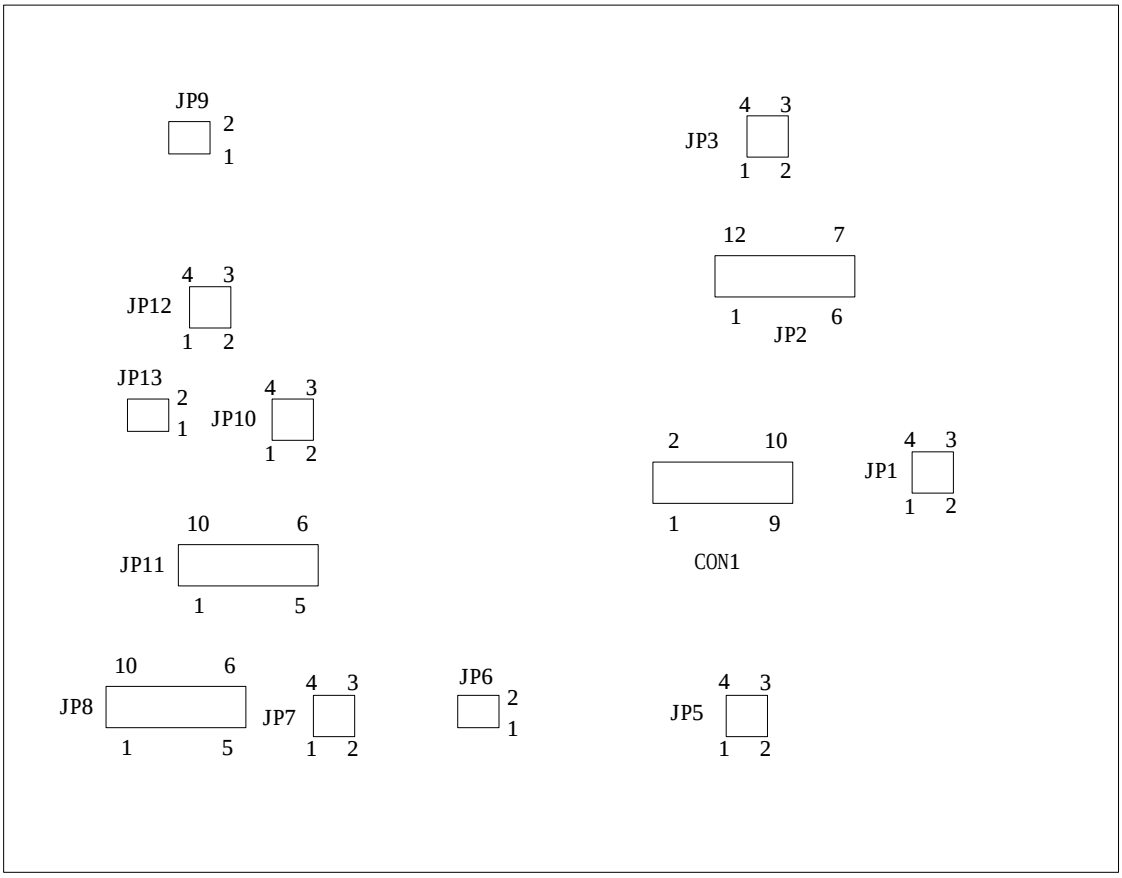

4.2.5.2 Setting

No.	Description	Normal Config.
JP1	VIACK DELAY TIME SELECTION 1-4 : 50ns 2-3 : 100ns	1 - 4 : 50ns
JP2	VME DPRAM ADDRESS COMPARE	3 - 10 5 - 8 6 - 7

No.	Description	Normal Config.
JP3	DMOD SELECTION 1-4 : DMOD1 (STN/DIRECT) 2-3 : DMOD0 (ACT/SBY)	1 - 4 : DMOD1
JP5	RX CLK INVERT SELECTION 1-4 : INVERT 2-3 : NON-INVERT	1 - 4 : INVERT
JP6	1 - 2 : RX CLK SELECTION	NC
JP7	TX CLK SELECTION 1 - 4 : INVERT 2 - 3 : NON INVERT	1 - 4 : INVERT
JP8	TX CLK TIME SELECTION 1 - 10 : 20MHz 2 - 9 : 10 MHz 3 - 8 : 5 MHz 4 - 7 : 2.5 MHz 5 - 6 : 1.2 MHz	4 - 7 : 2.5 MHz
JP9	1 - 2: PVAILD ENABLE/DISABLE	NC
JP10	1 - 4 : DMA REQUEST A 2 - 3 : DMA REQUEST B	2 - 3
JP11	1-10 : JTAG 1149.1 Boundary Scan Interface TRST 2 - 9 : JTAG 1149.1 Boundary Scan Interface TDI 3 - 8 : JTAG 1149.1 Boundary Scan Interface TDO 4 - 7 : JTAG 1149.1 Boundary Scan Interface TMS 5 - 6 : JTAG 1149.1 Boundary Scan Interface TCK	All Starp
JP12	1 - 4 : INTR1 (ENDPKT) 2 - 3 : INTR2 (SHIRQ)	2 - 3 : INTR2
JP13	1 - 2 : CPU RESET ENABLE/DISABLE	NC
CONN1	JTAG FOR FUSING MACH445	NC

4.2.6 HICA-A2 (High capacity IPC Control Board Assembly-A2)

4.2.6.1 Mounting Drawing

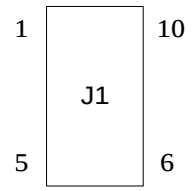

4.2.6.2 Setting

No.	Description	Normal Config.
J1	1-4, 7-10 : NO STRAP (XLINK LOADING FROM XCHECKER CABLE) 5,6 : STRAP (XLINK LOADING FROM PROM)	

4.2.7 HRNA-A2 (High performance Routing Node Assembly-A2)

4.2.7.1 Mounting Drawing

HRNA-A2 Strapping Drawing

NODE1

J6	
1	12
2	11
3	10
4	9
5	8
6	7

NODE2

J4	
1	12
2	11
3	10
4	9
5	8
6	7

NODE3

J7	
1	12
2	11
3	10
4	9
5	8
6	7

NODE4

J5	
1	12
2	11
3	10
4	9
5	8
6	7

NODE5

J8	
1	12
2	11
3	10
4	9
5	8
6	7

NODE6

J2	
1	12
2	11
3	10
4	9
5	8
6	7

NODE7

J9	
1	12
2	11
3	10
4	9
5	8
6	7

NODE8

J3	
1	12
2	11
3	10
4	9
5	8
6	7

J1

8 1	7 2	6 3	5 4

10M 1.25M

4.2.7.2 Setting

No.	Description	Normal Config.
J1	Choose INODECLK 1 - 8 : 10MHz 2 - 7 : 5MHz 3 - 6 : 2.5MHz 4 - 5 : 1.25MHz	1 - 8
J2 – J9	1-12 : INTERFR 1 2-11 : INTERFR 0 3-10 : UCLKSEL (Open=URXC, Short=INODECLK) 4-9 : UBABO (Open=RXA Enable, Short= Disable) 5-8 : FLAG (OPEN=IDLE, SHORT=FLAG) 6-7 : EQUIP (OPEN=EQUIP, SHORT=NOT EQUIP)	Node Setting

- J2 – J9 : Node setting Method for GCIN,LCIN Operation
  (J2 : NODE 1, J5 : NODE 2, J3 : NODE 3 , J4 : NODE 4, J6: NODE 5 , J9: NODE 6,
  J7: NODE 7 , J8: NODE 8)
- LCIN Node Setting

SUB-SYSTEM	FRAME Interval	CLOCK MODE	ALARM MASK	IDLE DATA
HICA-A2	30 byte	external	OFF	1
CCP	30 byte	external	OFF	flag
ACP	30 byte	external	ON	1
TSB	6 byte	external	OFF	flag
DM	30 byte	external	ON	1
CKD	30 byte	external	ON	1
BSM	30 byte	external	OFF	1
TFSA	30 byte	external	OFF	1
LOG	30 byte	external	ON	1
ENV	30 byte	external	ON	1
CSB, CSL	30 byte	external	OFF	flag

(Up) JUMPER (Down)

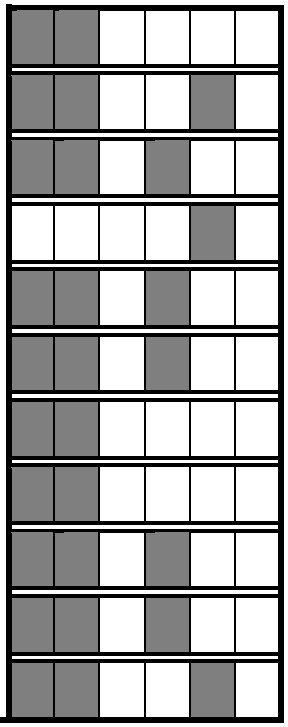

4.2.7.3 Reference Explanation

(1) J1 : U-LINK Clock Speed Adjust (When ON)

1 – 8 : 10 MHz

2 – 7 : 5 MHz

3 – 6 : 2.5 MHz

4 – 5 : 1.25 MHz

(2) J2 – J9 : Inter frame of each NODE, U-Link clock select, U-Link alarm mask selection, Transmission flag selection, EQUIP selection

- J2 – J9 (1 – 12, 2 – 11) : Adjust data frame to maximum length which can be received according to FRSIZE0, 1 at U-Link (ON : Low, OFF : High)

FRSIZE1 (1 – 12)	FRSIZE0 (2 - 11)	Data Length
H	H	512 Byte
H	L	768 Byte
L	H	1280 Byte
L	L	2304 Byte

- J2 – J9 (3 – 10) : Choose U-Link transmission clock between U-Link receive clock and internal clock (ON : Use internal clock, OFF : Use U-Link receive clock)
- 2 – J9 (4 – 9) : Choose U-Link receive alarm mask (ON : alarm mask, OFF : NODE control by alarm)
- J2 – J9 (5 – 8) : Choose inter frame transmission flag. (ON : flag transmission, OFF : idle transmission)
- J2 – J9 (6 – 7) : Choose Equipment of NODE. (ON : NODE available, OFF : NODE not available)

4.2.8 HNTA-A2 (High performance IPC Node & T1 Interface Assembly-A2)

4.2.8.1 Mounting Drawing

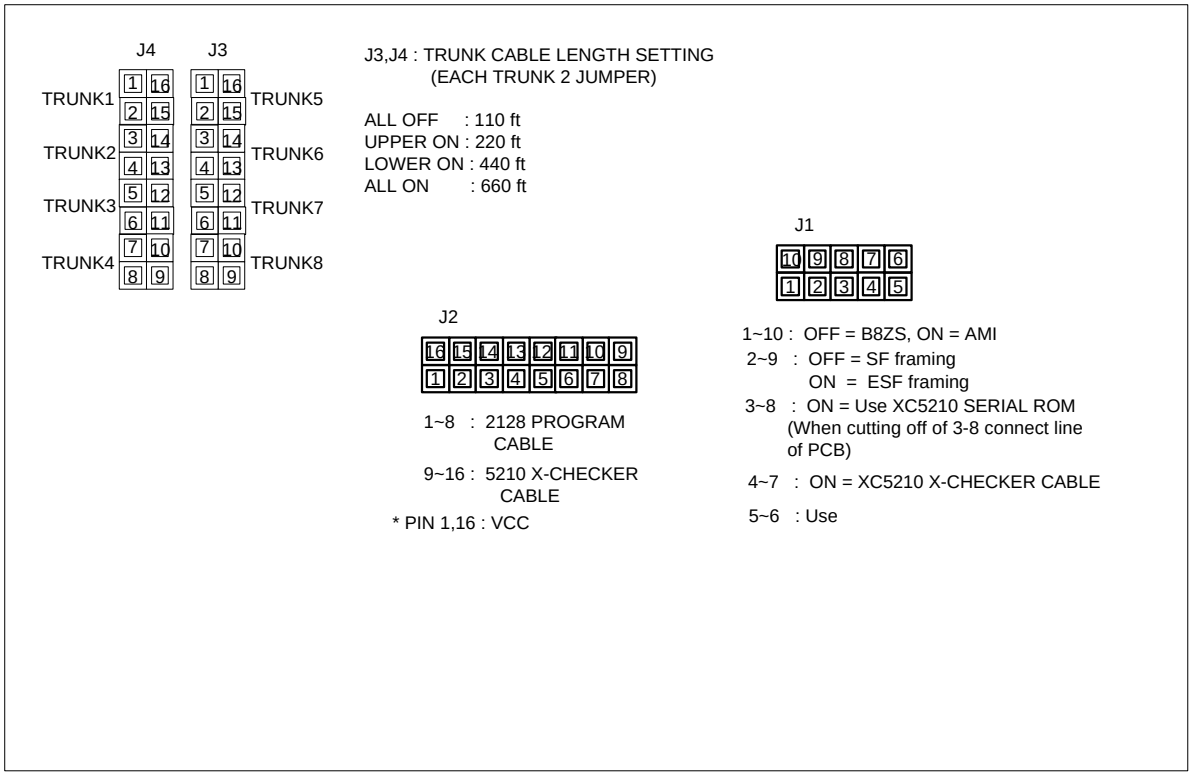

4.2.8.2 Setting

- J1 (Adjust for Operation MODE)

No.	Description	Normal config.
1 ~ 10	Choose T1 Line Coding. OFF = B8ZS, ON = AMI	-
2 ~ 9	Choose Framing. OFF = SF (D3/D4) framing ON = ESF Framing	-

No.	Description	Normal Conifg.
3 ~ 8	Set ON when using Serial ROM at EPLD 5210 Loading. Because 3~8 is shorted originally in PCB, jumper setting is not required when line is not cut off. ON = Use XC5210 Serial ROM (Cutting off of 3 ~ 8 Connection Line of PCB)	-
4 ~ 7	Set ON when using X-checker at EPLD 5210 Loading. Because 3~8 are shorted originally, cut off 3~8 on PCB and set jumper. ON = Use XC5210 X-CHECKER CABLE.	-
5 ~ 6	-	-

- J2 (For EPLD Loading)

No.	Description	Normal Config.
1 ~ 8	Connect Cable during programming EPLD 2128 (U43). 2128 PROGRAM CABLE	-
9 ~ 16	Connect Cable during Programs EPLD 5210 (U18) Loading. 5210 X-CHECKER CABLE	-
PIN 1, 16 : VCC		

- J4 (trunk 1~4 length setting)

No.	Description	Normal Config.
1~16 2~15	(TRUNK 1 LENGTH SETTING) ALL OFF : 110ft, 1~16 ON : 220ft 2~15 ON : 440ft, ALL OFF : 660ft	-
3~14 4~13	(TRUNK 2 LENGTH SETTING) ALL OFF : 110ft, 3~14 ON : 220ft 4~13 ON : 440ft, ALL OFF : 660ft	-
5~12 6~11	(TRUNK 3 LENGTH SETTING) ALL OFF : 110ft, 5~12 ON : 220ft 6~11 ON : 440ft, ALL OFF : 660ft	-
7~10 8~9	(TRUNK 4 LENGTH SETTING) ALL OFF : 110ft, 7~10 ON : 220ft 8~9 ON : 440ft, ALL OFF : 660ft	-

- J3 (trunk 5~8 length setting)

No.	Description	Normal Config.
1~16 2~15	(TRUNK 5 LENGTH SETTING) ALL OFF : 110ft, 1~16 ON : 220ft 2~15 ON : 440ft, ALL OFF : 660ft	-
3~14 4~13	(TRUNK 6 LENGTH SETTING) ALL OFF : 110ft, 3~14 ON : 220ft 4~13 ON : 440ft, ALL OFF : 660ft	-
5~12 6~11	(TRUNK 7 LENGTH SETTING) ALL OFF : 110ft, 5~12 ON : 220ft 6~11 ON : 440ft, ALL OFF : 660ft	-
7~10 8~9	(TRUNK 8 LENGTH SETTING) ALL OFF : 110ft, 7~10 ON : 220ft 8~9 ON : 440ft, ALL OFF : 660ft	-

4.2.9 TFSA-A1 (Time & Frequency Split Assembly-A1)

4.2.9.1 Mounting Drawing

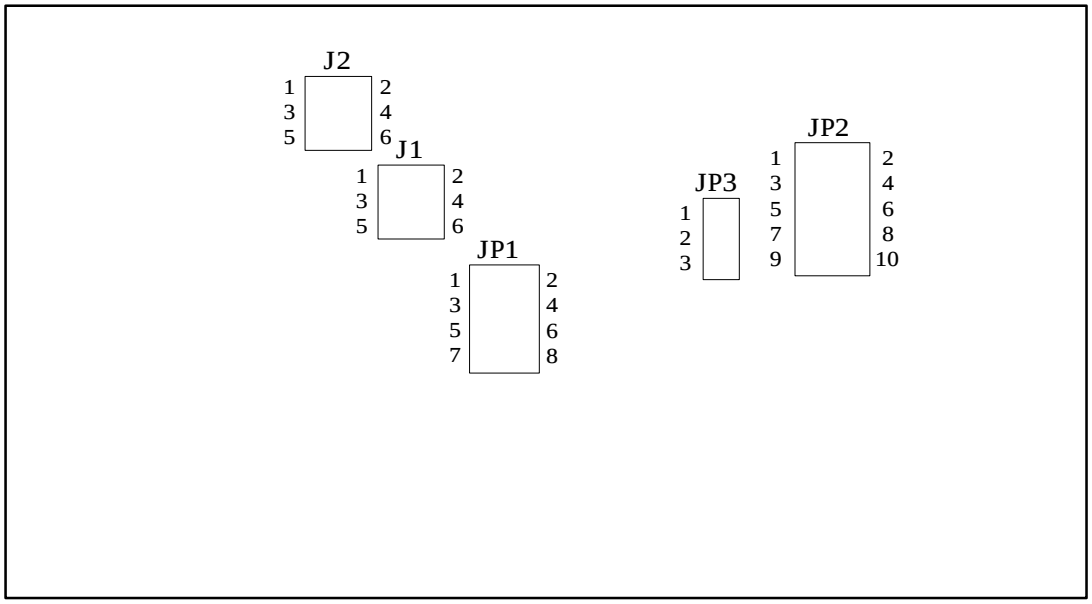

4.2.9.2 Setting

No.	Description	Normal Config.
JP1	Loop-back Test of SCC1 1-2 : HDLC-RX_DATA 3-4 : HDLC-TX_DATA 5-6 : HDLC-RX_CLK 7-8 : HDLC-TX_CLK	1-2 : HDLC-RX_DATA 3-4 : HDLC-TX_DATA 5-6 : HDLC-RX_CLK 7-8 : HDLC-TX_CLK
JP2	EPLD Fusing Connect 1-2 : MACH FUSING J-TAG 3-4 :MACH FUSING J-TAG 5-6 : MACH FUSING J-TAG 7-8 : MACH FUSING J-TAG 9-10 : MACH FUSING J-TAG	NC

No.	Description	Normal Config.
JP3	RAM Chip Selection 1-2 : Test Setting 2-3 : MACH RAM Chip Selection	2-3 : MACH RAM Chip Selection
J1	GPS 1PPS-INX Input Level Setting 1-2 : 50ohm Pull-Down 3-4 : 100ohm Pull-Down 5-6 : 150ohm Pull-Down	1-2 : 50ohm Pull-Down
J2	GPS 1PPS-INY Input Level Setting 1-2 : 50ohm Pull-Down 3-4 : 100ohm Pull-Down 5-6 : 150ohm Pull-Down	1-2 : 50ohm Pull-Down

4.2.10 TSGA-A1 (Time & frequency Splitting Generation Assembly-A1)

4.2.10.1 Mounting Drawing

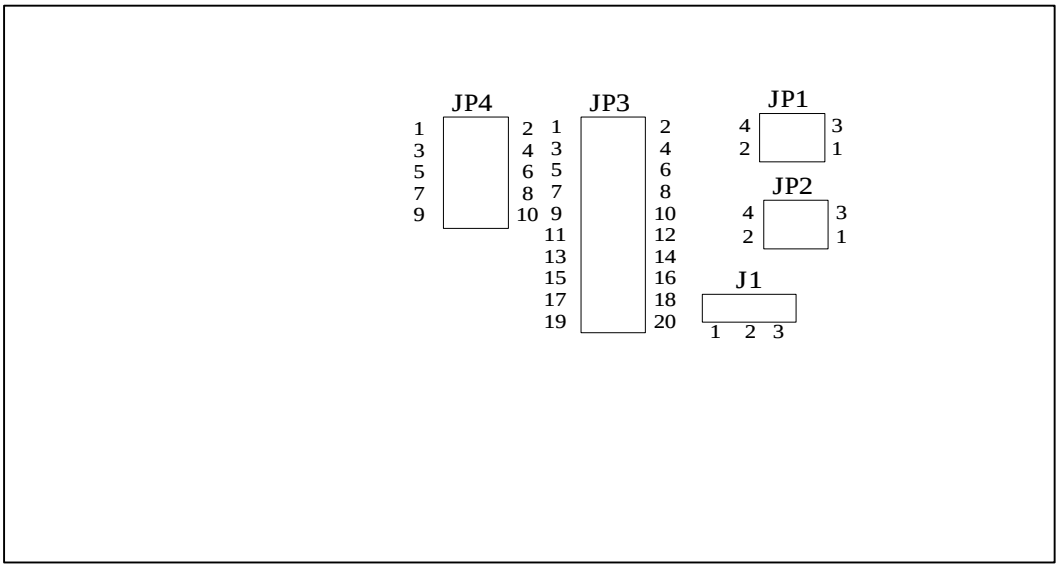

4.2.10.2 Setting

No.	Description	Normal Config.
J1	Internal Oscillator Setting 1-2 : Use Y1 internal Oscillator for test 2-3 : Use 10MHz from external	2-3 : Use 10MHz from external
JP1	1PPS input resistance Setting 1-2 : 300_ohm 3-4 : 10_ohm	1-2 : 300_ohm
JP2	1PPS input resistance Setting 1-2 : 300_ohm 3-4 : 10_ohm	1-2 : 300_ohm

No.	Description	Normal Config.
JP3	Clock Test Pin 2 : 2.048MHz SIGNAL 3 : 1.544MHz SIGNAL 4 : 8KHz SIGNAL 5 : 50Hz SIGNAL 6 : FOI SIGNAL 7 : 4.096MHz SIGNAL 8 : SUB SIGNAL 9 : ADD SIGNAL 10 : 50Hz RESET SIGNAL 11 : ADDA SIGNAL 12 : ADDPPS SIGNAL 13 : GPS_RST SIGNAL 14 : PPS_RST SIGNAL 19 : DLY_PPS SIGNAL 20 : 1PPS SIGNAL	NC
JP4	MACH_FUSING J_TAG	NC

4.2.11 TFDA-A1 (Time & Frequency Distribution Assembly-A1)

4.2.11.1 Mounting Drawing

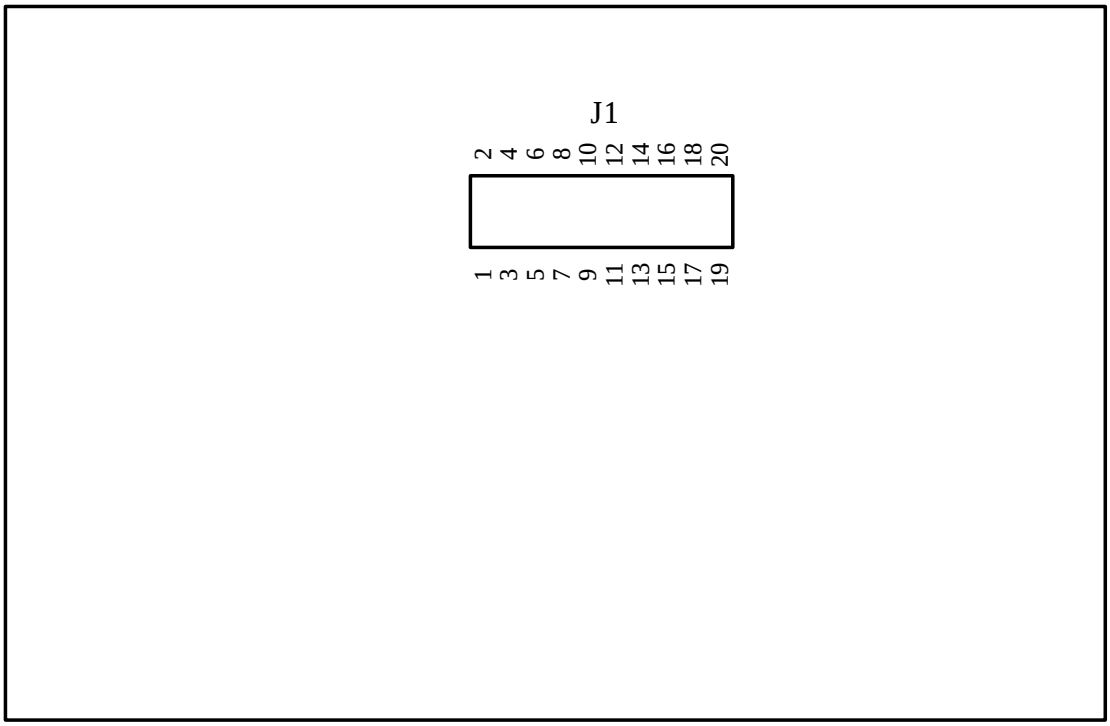

4.2.11.2 Setting

No.	Description	Normal Config.
J1	Signal Check 2 : FOI SIGNAL 4 : 2.048MHz SIGNAL 6 : 4.096MHz SIGNAL 8 : 50Hz SIGNAL 10 : 1.544MHz SIGNAL	NC

4.2.12 VSIA-C1 (Vocoder Selector Interface Assembly-A1)

4.2.12.1 Mounting Drawing

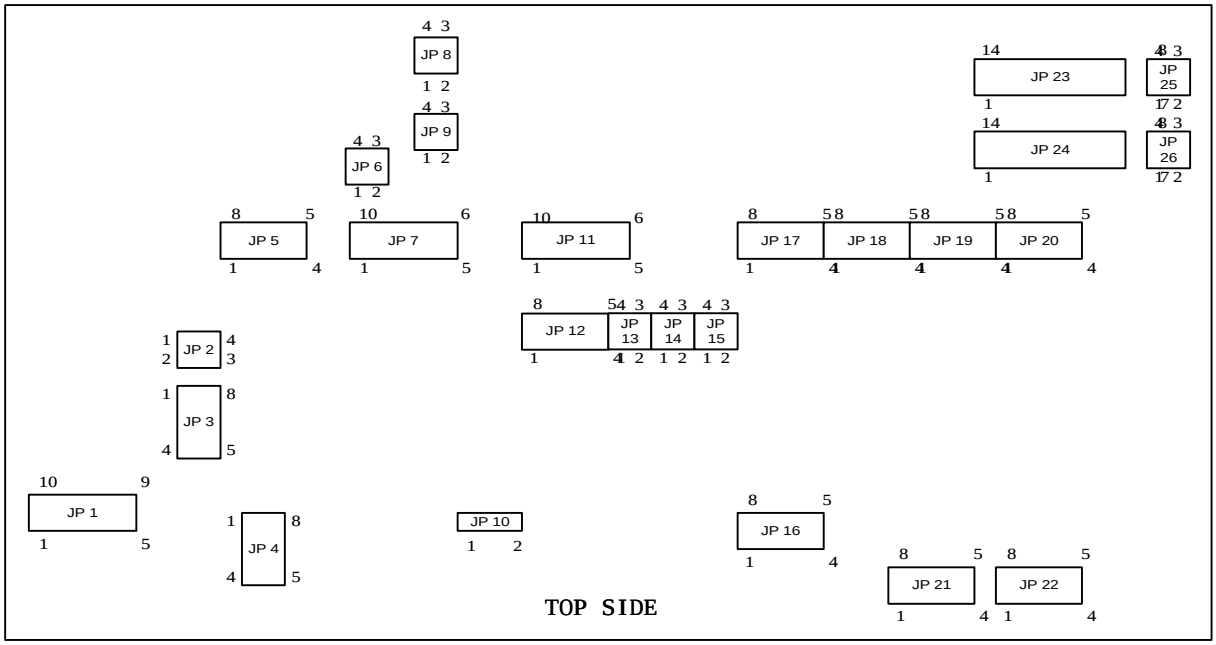

4.2.12.2 Setting

No.	Description	Normal Config.
JP 1	JTAG PROGRAMMING PORT	
JP 2	SCC1 TX CLOCK 1-4 : NOT INVERTED 2-3 : INVERTED	1 -4
JP 3	SCC1 TX CLOCK 1-8 : 8.15 MHz 2-7 : 8 MHz 3-6 : 4 MHz 4-5 : 2 MHz	3 - 6
JP 4	MOD CLK SELECTION	2 - 7 3 - 6
JP 5	MT8941 T1 SETUP	
JP 6	E8KO SELECTION	1 - 4

No.	Description	Normal Config.
JP 7	TEST PORT CONNECTOR	
JP 8 JP 9	MT8980 LOOP SELECTION	1 - 2 3 - 4
JP 10	SCC1 RX LOOP CLOCK	
JP 11	HDLC CLOCK SELECTION 1-10 : 16 MHz 2-9 : 8.15 MHz 3-8 : 8 MHz 4-7 : 4 MHz 5-6 : 2 MHz	4 - 7
JP 12	TSA CLOCK	1 - 8 2 - 7 3 - 6 4 - 5
JP 13	FOI CLOCK SELECTION 1-4 : NOT INVERTED 2-3 : INVERTED	2 - 3
JP 14 JP 15	ST-BUS CLOCK SELECTION	1 - 4
JP 16	ROUTER CLOCK SELECTION 1-8 : 32 MHz 2-7 : 16.384 MHz 3-6 : 16 MHz 4-5 : 8 MHz	2 - 7
JP 17	SCC1 RX CLOCK 1-4 : NOT INVERTED 2-3 : INVERTED	1 - 4
JP 18	HDLC RX CLOCK 1-4 : NOT INVERTED 2-3 : INVERTED	1 - 4
JP 19	HDLC RX CLOCK 1-4 : RXC 2-3 : TXC	1 - 4
JP 20	HDLC TX CLOCK 1-4 : NOT INVERTED 2-3 : INVERTED	1 - 4

No.	Description	Normal Config.
JP 21	HDLC RX DATA 1-4 : RXD 2-3 : TXD	1 - 4
JP 22	ROUTER MOVE	1 - 4
JP 23	T1 EQUALIZER 0 SETTING	
JP 24	T1 EQUALIZER 1 SETTING	
JP 25 JP 26	TRANSFORMER POWER 1-4 : 5V 2-3 : 12V	2 - 3

4.2.13 VSOA-A1 (Vocoder Selector Operation Assembly-A1)

4.2.13.1 Mounting Drawing

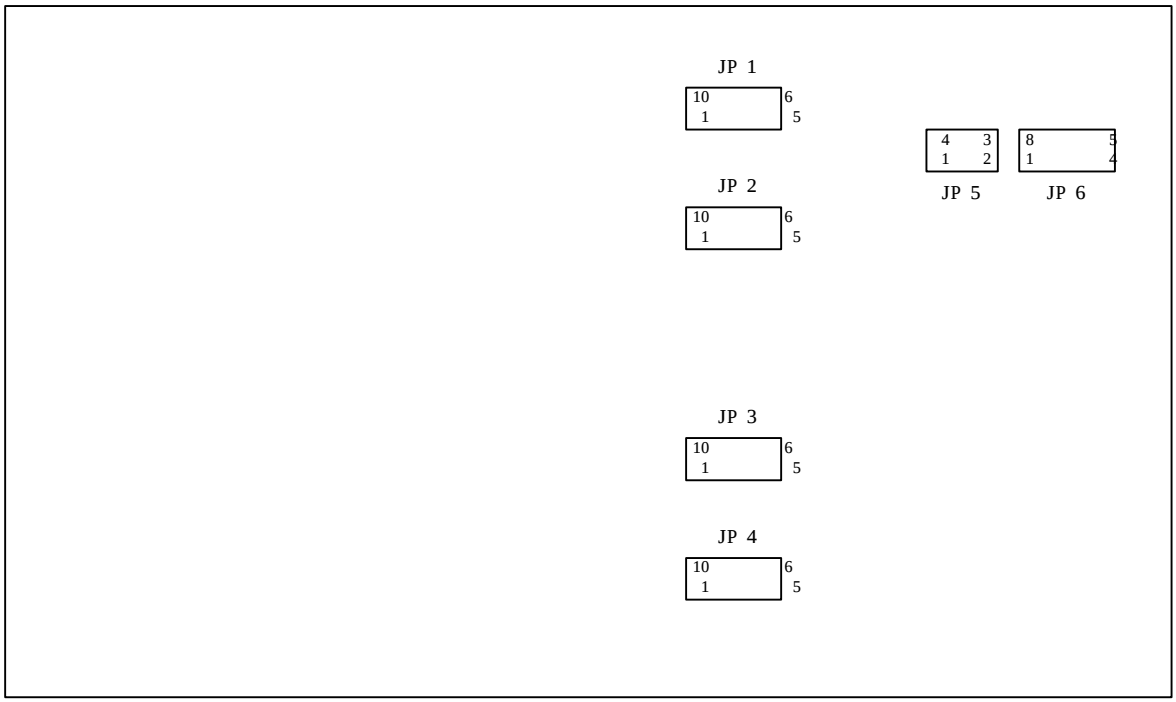

4.2.13.2 Setting

No.	Description	Normal Config.
JP1	• JTAG PORT FOR A_AM29240EH (U 68) • Use CABLE connection during CPU_A TEST • Connect GND (SHORT) when normal operation 1 - 10 : A_CTRST* - GND 2 - 9 : A_ CTDI - GND 3 - 8 : A_CTDO - GND 4 - 7 : A_CTMS - GND 5 - 6 : A_CTCK - GND	NORMAL : SHORT TEST : OPEN (CABLE)

No.	Description	Normal Config.
JP2	• JTAG PORT FOR 12 DSPs • Use CABLE connection when DSP BOUNDARY SCAN • OPEN when normal operation 1 : TCKIN 10 : GND 2 : TMS 9 : GND 3 : TDI0 8 : VCC 4 : TDO0 7 : GND 5 : TCKEN 6 : GND	NORMAL : OPEN TEST : OPEN (CABLE)
JP3	• JTAG PORT FOR EPLD • Use CABLE connection when EPLD PROGRAMMING • OPEN when normal operation 1 : J_TCK 10 : GND 2 : J_TMS 9 : GND 3 : J_TDI0 8 : VCC 4 : J_TDO0 7 : GND 5 : J_TRST 6 : GND	NORMAL : OPEN TEST : OPEN (CABLE)
JP4	• JTAG PORT FOR B_AM29240EH (U70) • Use CABLE connection when CPU_B TEST • Connect GND (SHORT) when normal operation. 1 - 10 : B_CTRST* - GND 2 - 9 : B_ CTDI - GND 3 - 8 : B_CTDO - GND 4 - 7 : B_CTMS - GND 5 - 6 : B_CTCK - GND	NORMAL : SHORT TEST : OPEN (CABLE)

No.	Description	Normal Config.
JP5	• AM29240EH UART CLOCK 1 - 4 : C4I* FROM CKD 2 - 3 : 8MHZ LOCAL CLOCK	NORMAL : 1-4 OPEN 2-3 SHORT
JP6	• CDMA REFERENCE CLOCK (C4I*, FOI*) 1 - 8 : C4I* FROM VSIA-C1 2 - 7 : C4I* FROM CKD 3 - 6 : FOI* FROM VSIA-C1 4 - 5 : FOI* FROM CKD	NORMAL : 1-8 SHORT 2-7 OPEN 3-6 SHORT 4-5 OPEN

4.2.14 CHBB-A1 (CIN HIPC Back Board-A1)

4.2.14.1 Mounting Drawing

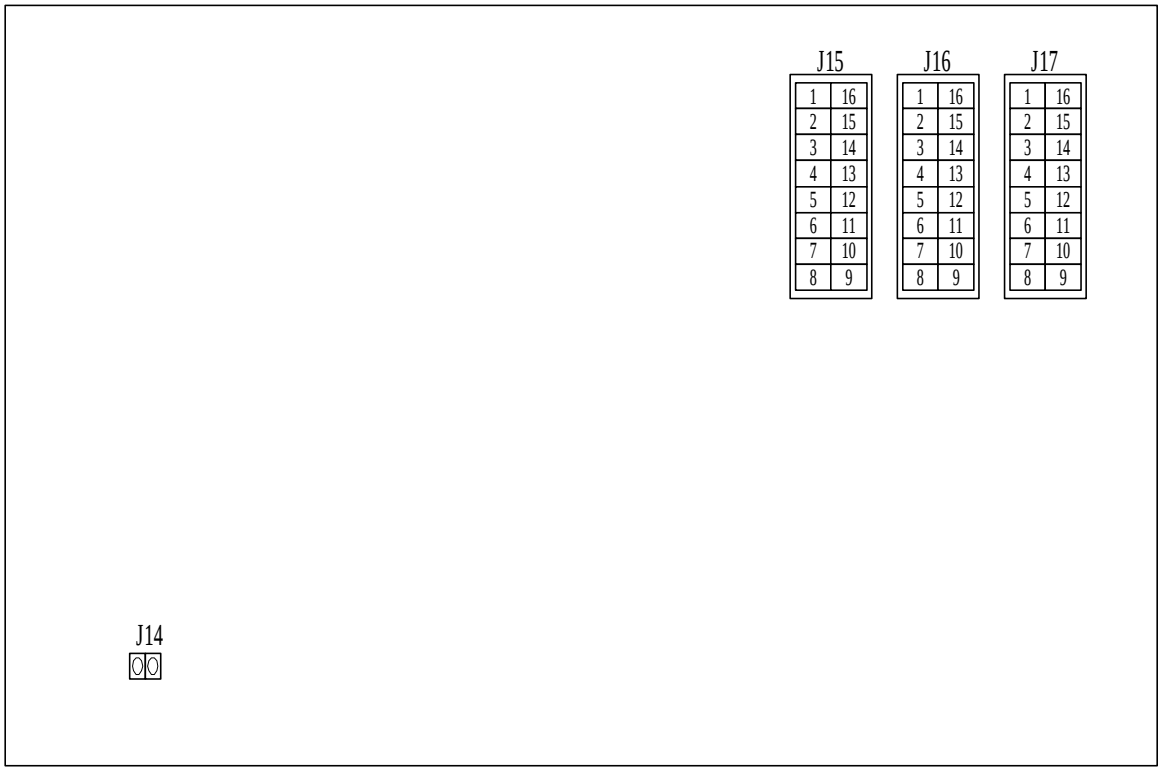

4.2.14.2 Setting

In LCIN A side, shunt J14 and In LCIN B side, open J14

No.	Description	Normal Config.
J14	open : SIDE1 shunt : SIDE0	
J15	Upper 4 Bit : GCIN ID Setting (#0~#3) Lower 4 Bit : LCIN ID Setting (#0~#11)	
J16	Reserved (No Shunt)	
J17	Reserved (No Shunt)	

4.2.14.2.1 Setting for LCIN

Address setting for LCIN is done on CHBB-A1.

CHBB-A1 Setting

- J14 strap : Classification of dualized LCIN Side (ON: Side 0, OFF: Side 1)
- J15 strap : LCIN ID Lower 4-BIT Setting, GCIN ID Upper 4-BIT Setting
- J16, J17 strap : Reserved

LCIN 0	LCIN 1	LCIN 2	LCIN 3	LCIN 4	LCIN 5	LCIN 6	LCIN 7	LCIN 8	LCIN 9	LCIN 10	LCIN 11
5-12	5-12	5-12	5-12	5-12	5-12	5-12	5-12	5-12	5-12	5-12	5-12
6-11	6-11	6-11	6-11	6-11	6-11	6-11	6-11	6-11	6-11	6-11	6-11
7-10	7-10	7-10	7-10	7-10	7-10	7-10	7-10	7-10	7-10	7-10	7-10
8-9	8-9	8-9	8-9	8-9	8-9	8-9	8-9	8-9	8-9	8-9	8-9

4.2.15 CCBB-A1 (CCP Back wiring Board-A1)

4.2.15.1 Mounting Drawing

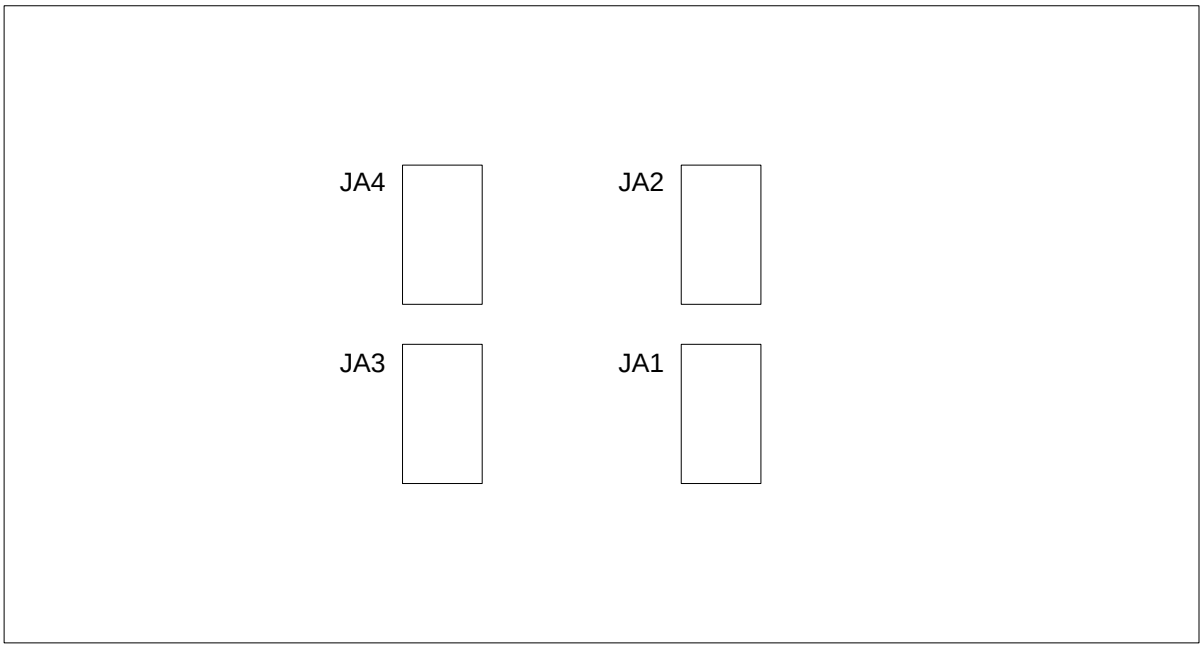

4.2.15.2 Setting

No.	Description	Normal Config.
JA1/JA2	Strap for A side Address Setting of CCP-A1	
JA3/JA4	Strap for B side Address Setting of CCP-A1	

- JA1 - JA4 are currently used for CCP-A1 Address Setting.

  Currently, CCP-A1 (0) has Physical Address 0064, 8064 and CCP-A1 (1) has Physical Address 0165, 8165.

  For example, Set Aside 0064, B side 8064 of CCP-A1 (0) as follows.

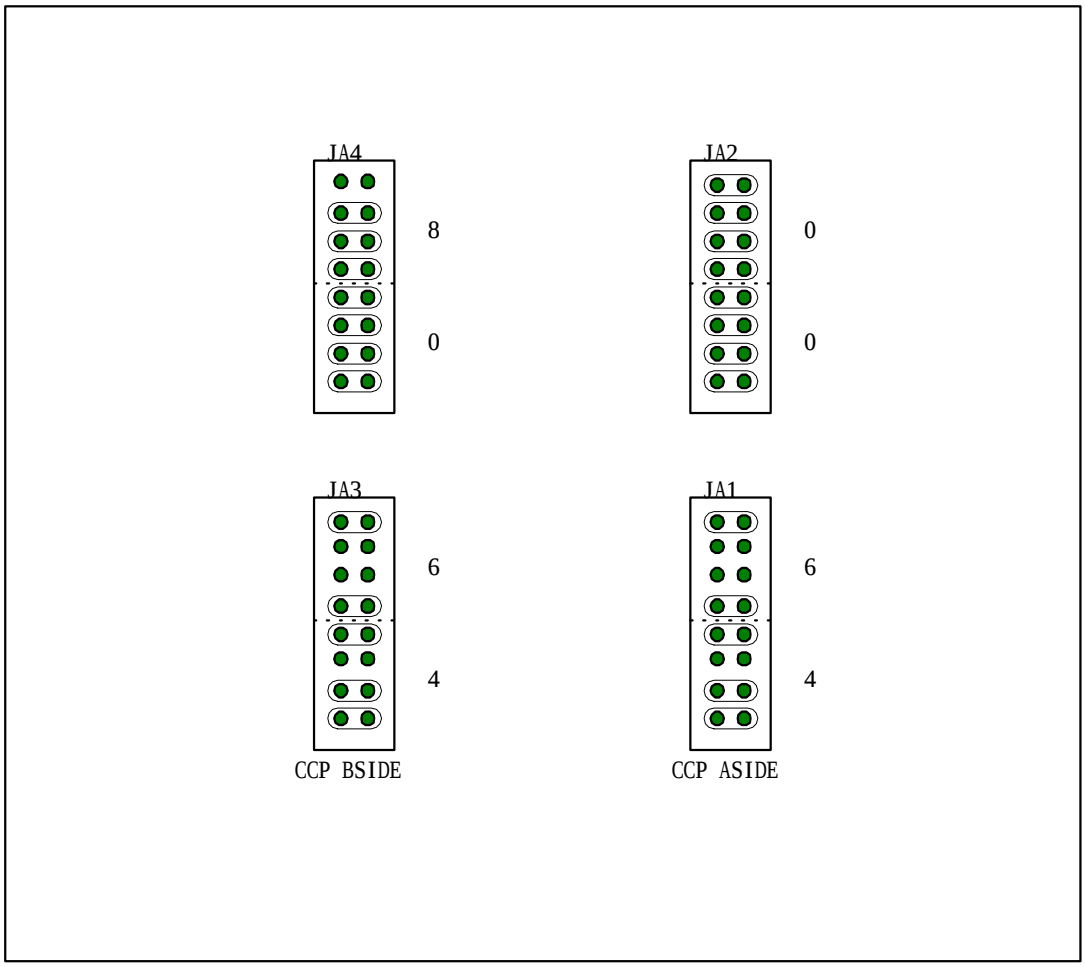

4.2.16 ACPA-A1 (Alarm Control Processor Assembly-A1)

4.2.16.1 Mounting Drawing

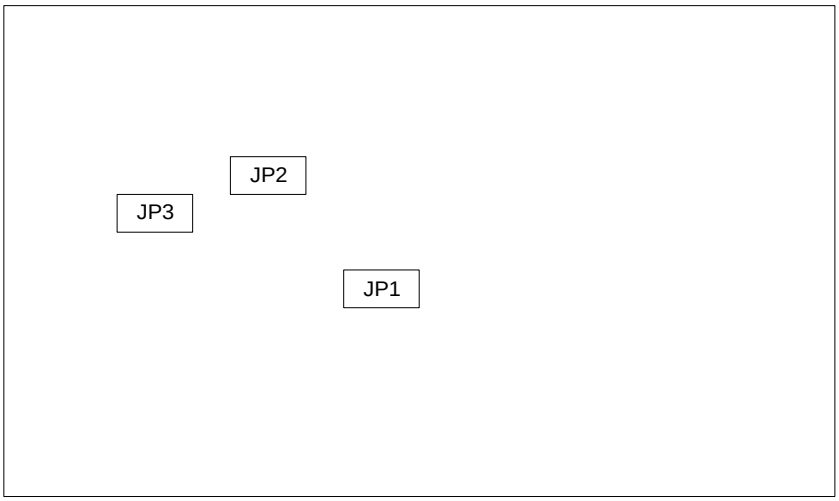

4.2.16.2 Setting

When setting DS1232VCC Monitor, shunt JP1 in a normal operation is open.
When setting IPC Loop-back, shunt JP2 in a normal operation is open.

No.	Description	Normal Config.
JP1	1-2: DS1232VCC Monitor Enable	
JP2	1-2 : IPC Loop-back ON	
JP3	NOT USED	

4.2.17 SDBB-A1 (CKD Split & Distributed Back Board-A1)

4.2.17.1 Mounting Drawing

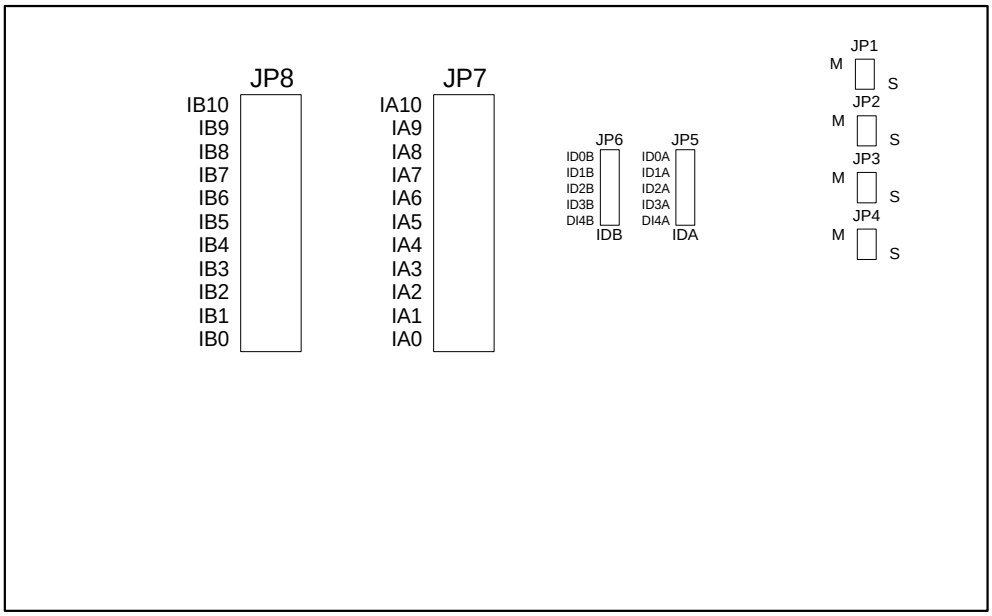

4.2.17.2 Setting

No.	Description	Normal Config.
JP1	10MHz,1PPS Mode Setting M : BSC 0 Shelf S : BSC 1,2,3,4,5 Shelf	
JP2	10MHz,1PPS Mode Setting M : BSC 0 Shelf S : BSC 1,2,3,4,5 Shelf	
JP3	10MHz,1PPS Mode Setting M : BSC 0 Shelf S : BSC 1,2,3,4,5 Shelf	
JP4	10MHz,1PPS Mode Setting M : BSC 0 Shelf S : BSC 1,2,3,4,5 Shelf	
JP5	TFSA 0 Side ID Setting ID0-2A : GCIN Classification ID3A : BSC Classification ID4A : SIDE Classification	
JP6	TFSA 1 Side ID Setting ID0-2B : GCIN Classification ID3B : BSC Classification ID4B : SIDE Classification	
JP7	TSGA 0 Side ID Setting IA0 : SIDE Classification IA1-3 : CIN Classification IA4-7 : BSC Classification IA8-10 : RESERVED	ALL OFF-SET (OPEN) : "1"
JP8	TSGA 1 Side ID Setting IB0 : SIDE Classification IB1-3 : CIN Classification IB4-7 : BSC Classification IB8-10 : RESERVED	ALL SET : "0"

4.2.18 TSBB-A1 (TSB Back Board-A1)

4.2.18.1 Mounting Drawing

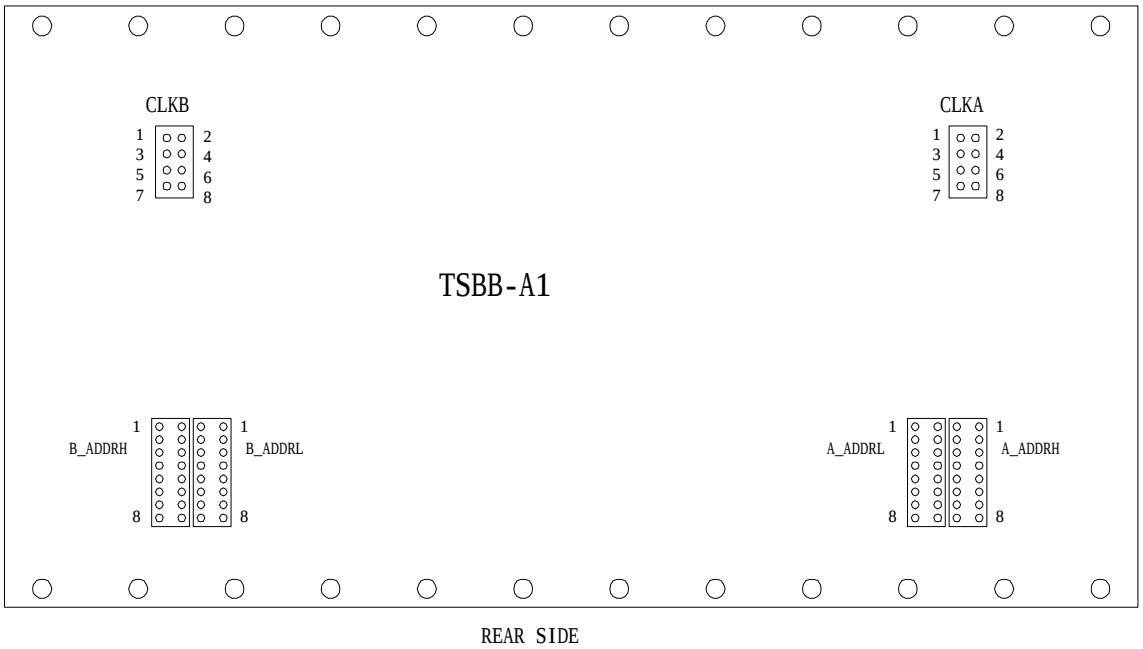

4.2.18.2 Setting

If Address of TSB0 is E000 (2byte address), set as follows. (If jumper is putting in, it means "0" and if jumper is pulling out, it means "1")

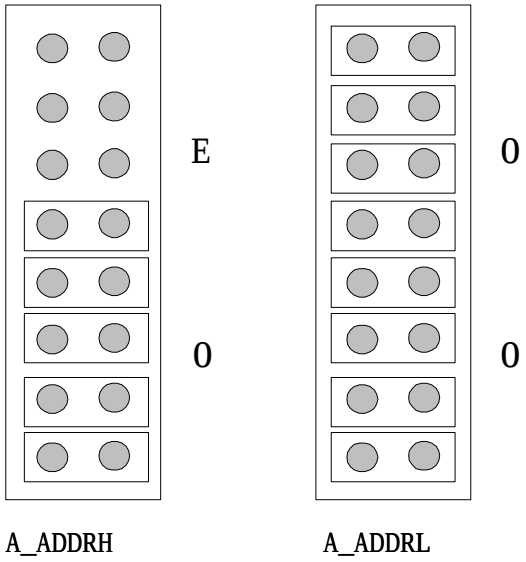

4.2.19 BABB-A1 (BSC Alarm Back Board-A1)

4.2.19.1 Mounting Drawing

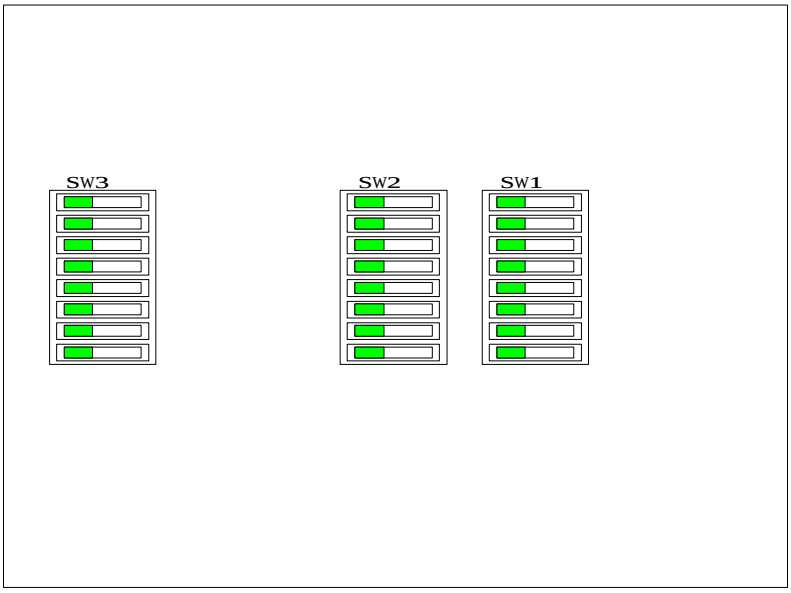

4.2.19.2 Setting

When setting BSC ID "0", SW2 (8~5) is ON and when setting BSC ID "1", SW2 (8~5) is OFF. When setting GCIN ID "0", SW1 (6~4) is ON and when setting GCIN ID "1", SW1 (6~4) is OFF.

No.	Description	Normal Config.
SW3	NOT USED	
SW2	8 ON:BSC ID-BIT 3 7 ON:BSC ID-BIT 2 6 ON:BSC ID-BIT 1 5 ON:BSC ID-BIT 0 4 : OFF-1 3 : OFF-1 2 : OFF-1 1 : OFF-1	

No.	Description	Normal Config.
SW1	8 : OFF-1 7 : OFF-1 6 ON : GCIN ID BIT 2 5 ON : GCIN ID BIT 1 4 ON : GCIN ID BIT 0 3 : Reserved 2 : Reserved 1 ON : Side A 1 OFF : Side B	

4.2.20 HSBB-A1 (HIPC Small Back Board-A1)

4.2.20.1 Mounting Drawing

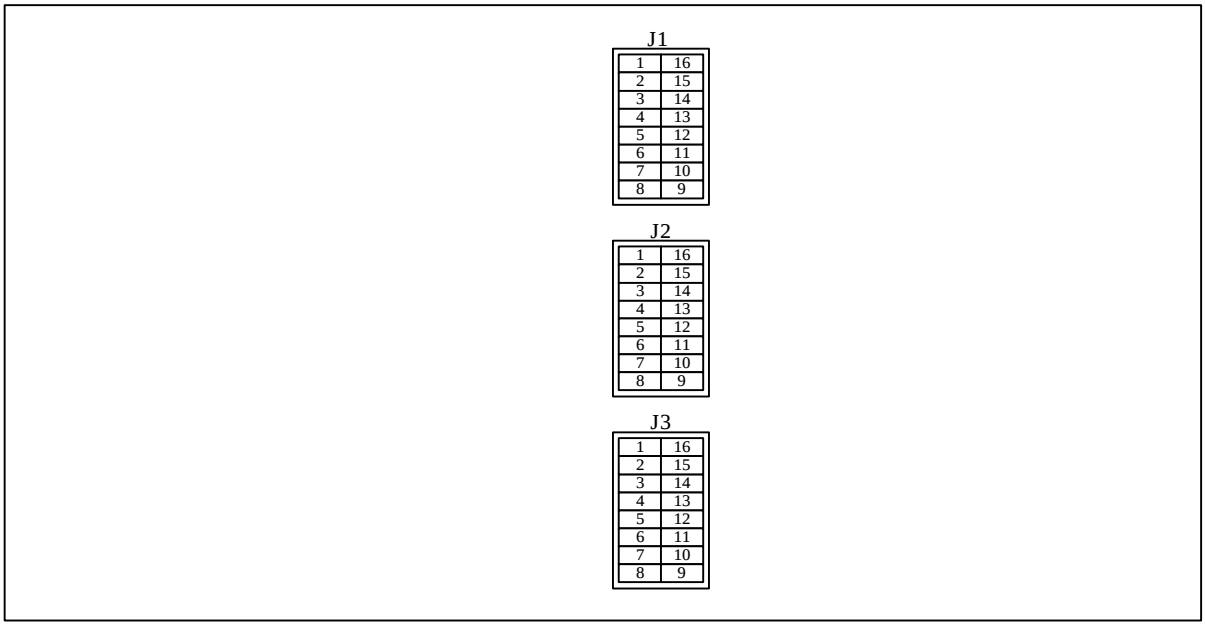

4.2.20.2 Setting

No.	Description	Normal Config.
J1	Upper 4 Bit : GCIN ID Setting (#0~#3)	
J2	Reserved (No Shunt)	
J3	Reserved (No Shunt)	

GCIN0		GCIN1		GCIN2		GCIN3	
1	16	1	16	1	16	1	16
2	15	2	15	2	15	2	15
3	14	3	14	3	14	3	14
4	13	4	13	4	13	4	13

4.3 LED Description

PBA	Front Panel	LED	Normal	Abnormal	Description
CIFA-A1	○ RUN ○ FAIL ○ ACT ○ CHS ○ CHX	RUN	ON	OFF	Drives with Run signal of CPU and ON if normal operation
		FAIL	OFF	ON	ON when in the state of unable to recover, or indicating PBA Fail
		ACT	ON	OFF	ON when Active, OFF when Standby
		CHS	OFF/ON		ON when U-Link A channel enable
		CHX	ON/ OFF		ON when U-Link B channel enable

MCDA	○ RUN ○ OVWR ○ FAIL ○ A CT ○ CONF ○ CMSG ○ HALT	RUN	ON	OFF	OFF when CPU Error (Change PBA)
		OVWR	ON	OFF	ON state indicating of overwriting data from Active Side to Standby Side in connection with D-Channel
		FAIL	OFF	ON	Indicating PBA Fail (After Reset, abnormal state exists) or ON when in the state of local resource initial during Processor Loading
		ACT	ON,OFF		ON when Active, OFF when Standby
		CONF	OFF	ON	ON when C-CH Error occurs or Reset, default is OFF
		CMSG	ON,OFF		In the state of transmission of Message to C-CH. default is OFF.
		HALT	OFF	ON	ON when CPU Halt due to critical error. (Reset with CPU Halt or PBA change if necessary)

PBA	Front Panel	LED	Normal	Abnormal	Description

HICA-A2	○ ACT ○ RUN ○ FAIL ○ CLKF	ACT	ON,OFF		ON when operates as an Active (After Reset, abnormal state exists, then Change PBA)
		RUN	ON	OFF	ON when CPU normal operation, OFF when abnormal
		FAIL	OFF	ON	Indicating PBA Fail (After Reset, abnormal state exists, then Change PBA)
		CLKF	OFF	ON	when reference clock of Link is abnormal

HNTA-A2	○ RUN ○ FAIL ○ ROUTE ○ TEST ○ LER0 ○ LER1 ○ LER2 ○ LER3 ○ LER4 ○ LER5 ○ LER6 ○ LER7	RUN	ON	OFF	ON (Green) when CPU operates
		FAIL	OFF	ON	ON (Red) when PBA function is abnormal, / After Reset, Change PBA if Led is ON
		ROUTE	-	-	ON (Green) when Packet transmit/receive with Trunk
		TEST	-	-	when performs PBA test function ON (Yellow)

		LER0	OFF	ON	Indicating abnormal status of 8 Trunks. : ON when Trunk is Cutting Off. (Check the connection status of connector and if ON continually, after checking Trunk status with instrument, PBA Change if ON continually)
		LER1	OFF	ON	
		LER2	OFF	ON	
		LER3	OFF	ON	
		LER4	OFF	ON	
		LER5	OFF	ON	
		LER6	OFF	ON	
		LER7	OFF	ON	

PBA	Front Panel	LED	Normal	Abnormal	Description

HRNA-A2	○ RUN ○ FAIL ○ ROUTE ○ TEST ○ ACT1 ○ ACT2 ○ ACT3 ○ ACT4 ○ ACT5 ○ ACT6 ○ ACT7 ○ ACT8	RUN	ON	OFF	ON when CPU operates normally
		FAIL	OFF	ON	ON when Reset and HRNA-A2 fails
		ROUTE	-	-	ON when transmit packet frame using D-BUS and U-LINK
		TEST	-	-	ON when PBA performs test function

		ACT1	-	-	ON when NODE 1 is ACTIVE
		ACT2	-	-	ON when NODE 2 is ACTIVE
		ACT3	-	-	ON when NODE 3 is ACTIVE
		ACT4	-	-	ON when NODE 4 is ACTIVE
		ACT5	-	-	ON when NODE 5 is ACTIVE
		ACT6	-	-	ON when NODE 6 is ACTIVE
		ACT7	-	-	ON when NODE 7 is ACTIVE
		ACT8	-	-	ON when NODE 8 is ACTIVE

PBA	Front Panel	LED	Normal	Abnormal	Description
TFSA-A1	RUN ACT 1PPS 10M TOD	RUN	ON	OFF	CPU Status

		ACT	ON	OFF	ACTIVE Status
		1PPS	Blink	OFF	1PPS input status
		10M	ON	OFF	10MHz input status
		TOD	Blink	OFF	TOD input status
TSGA-A1	ACT RUN 10M 1PPS PLL 50Hz	ACT	Blink	ON	Blink when Active, Off when Standby, ON when abnormal status
		RUN	ON	OFF	CPU Status
		10M	Blink	OFF	10MHz input status
		1PPS	Blink	OFF	1PPS input status
		PLL	ON	OFF	Internal PLL LOCKING Status
		50HZ	ON	OFF	50Hz CLOCK Status

TFDA-A1	ACT PWR	ACT	Blink	ON	Blink when Active, Off when Standby, ON when abnormal status
		PWR	ON	OFF	POWER Status

PBA	Front Panel	LED	Normal	Abnormal	Description
VSIA-C1	○ RUN ○ FAIL ○ HALT ○ CLKALM ○ ROUTE ○ LINKA ○ LINKB	RUN	ON (Green)		ON if CPU is active and operates normally.
		FAIL	OFF	ON (Red)	LED is controlled by S/W, OFF when started OS, ON when not started OS.
		HALT	OFF	ON (Red)	ON when CPU halt and both fail of two links due to significant error.
		CLKF	OFF	ON (Yellow)	ON when clock is abnormal from CKD Block
		ROUTE	ON (Green)		ON when packet is moving.
		LINKA	OFF		Unused.
		LINKB	OFF		Unused

PBA	Front Panel	LED	Normal	Abnormal	Description
ACPA-A1		RUN	ON (Green)	ON (Red)	Board is in the state of operating.
	○ RUN	FAIL	OFF	ON (Red)	ON if not finished of Down Loading
	○ FAIL	HALT	OFF	ON (Red)	ON when system is in the state of abnormal.
	○ HALT				
GTFU-A1	○ RUN	RUN	ON	OFF	Normal Operational Status
	○ ACT	ACT	ON(A)/OFF(S)	-	Provide 10MHz,1PPS Output To System
	○ GPSALM	GPSALM	OFF	ON	Tracking GPS Satellite
	○ 1PPSALM	1PPSALM	OFF	ON	1PPS Exceed Over 800nsec
	○ FAULT	FAULT	OFF	ON	System Fault Condition

VSOA-A1	○ ○ 50MHZ ○ ○ RUN A/B ○ ○ FAIL A/B ○ ○ DSP 0/6 ○ ○ DSP 1/7 ○ ○ DSP 2/8 ○ ○ DSP 3/9 ○ ○ DSP 4/10 ○ ○ DSP 5/11	50MHZ	ON (Green)	OFF	ON when clock is normal from CKD BLOCK
		RUN A/B	ON (Green)	OFF	ON when A/B Side CPU operates normally
		FAIL A/B	OFF	ON (Red)	ON before Down Loading from CCP Block, OFF if ended
		DSP 0/6	ON (Yellow)/OFF	Blink	DSP 0/6 ON When call setup, OFF when release, Blink when DSP is abnormal.
		DSP 1/7	ON (Green)/OFF	Blink	DSP 1/7 ON When call setup, OFF when release, Blink when DSP is abnormal.
		DSP 2/8	ON (Green)/OFF	Blink	DSP 2/8 ON When call setup, OFF when release, Blink when DSP is abnormal.

		DSP 3/9	ON (Green)/OFF	Blink	DSP 3/9 ON When call setup, OFF when release, Blink when DSP is abnormal.
		DSP 4/10	ON (Green)/OFF	Blink	DSP 4/10 ON When call setup, OFF when release, Blink when DSP is abnormal.
		DSP 5/11	ON (Green)/OFF	Blink	DSP 5/11 ON When call setup, OFF when release, Blink when DSP is abnormal.

4.4 COMMAND LIST

COD_ID	Description	Command	Parameter
C5668	Equip Activate of ACP	ACT-ACP	:BSC=a, ACP=b;
C5610	Equip Activate of AMP	ACT-AMP	:{BSC=a, BCP=b}/{BTS=a}, SECT=c, FA=d;
C5605	Equip Activate of BTS Link	ACT-BLNK	:{BSC=a, BCP=b}/{BTS=a}, BCP=b, LINK=c;
C5600	Equip Activate of BTS	ACT-BTS	:{BSC=a, BCP=b}/{BTS=a};
C5662	Equip Activate of BTU	ACT-BTU	:{BSC=a, BCP=b}/{BTS=a};
C5686	Equip Activate of CCC	ACT-CCC	:{BSC=a, BCP=b}/{BTS=a}, DU=c, SLOT=d;
C2014	CCP Old/New PKG Change Activate	ACT-CCP-SBY	:BSC=a;
C5685	Equip Activate of Channel Element	ACT-CE	:{BSC=a, BCP=b}/{BTS=a}, DU=c, SLOT=d, SNODE=e;
C5663	Equip Activate of GCIN HRNA	ACT-GCIN	:HRNA=a;
C5667	Equip Activate of BIN HNEA	ACT-HNEA-BIN	:{BSC=a, BCP=b}/{BTS=a},HNEA=c;
C5666	Equip Activate of LCIN HNEA	ACT-HNEA-LCIN	:BSC=a,HNEA=b;
C5665	Equip Activate of BIN HRNA	ACT-HRNA-BIN	:{BSC=a, BCP=b}/{BTS=a},HRNA=c;
C5664	Equip Activate of LCIN HRNA	ACT-HRNA-LCIN	:BSC=a,HRNA=b;
C9010	Equip Activate of LINK	ACT-LINK	:BSC=a,LINK=b;

COD_ID	Description	Command	Parameter
C9009	Equip Activate of Link Set	ACT-LSET	:BSC=a;
C3003	Overload Threshold Activate	ACT-OVLD-THR	:{PRC=a, BSC=b}/{PRC=a,BSC=b,BCP=c}/{BTS=a}, ONOFF=d;
C5637	Equip Activate of SIP	ACT-SIP	:BSC=a, SIP=b;
C5639	Equip Activate of SVE	ACT-SVE	:BSC=a, SIP=b, SVP=c, SVE=d;
C5638	SVP of Equip Activate	ACT-SVP	:BSC=a, SIP=b, SVP=c;
C2007	Add Loading Block	ADD-LDNG-BLK	:{BSC=a}/{BSC=a, BLKTYPE=b}, HDTYPE=c, BLKNAME=d, VERSION=e;
C5242	Add BTS NEBR	ADD-NEBR	:{BSC=a, BCP=b}/{BTS=a}, SECT=c, FA=d, NBRBTS=e, NBRSECT=f;
C4501	Add Mobile MARKOV function	ADD-REG-MARK	:MIN=a,SCM=b,BTS=c,RATE=d;
C1000	Allow alarm message output	ALW-ALM-MSG	:AN=a;
C1020	Allow reflection of alarm status	ALW-ALM-STS	
C1001	Allow audio alarm output	ALW-AUD-ALM	[:GRD=a];
C6404	Allow daily statistics	ALW-DRPT-MSG	:BSC=a;
C1002	Allow fault message output	ALW-FLT-MSG	:FN=a;
C6403	Allow hourly statistics	ALW-HRPT-MSG	:BSC=a;
C6405	Allow monthly statistics	ALW-MRPT-MSG	:BSC=a;
C4401	Allow periodic diagnostic	ALW-PED-TST	:DEV=a,{BSC=b, BCP=c}/{BTS=b}/{BSC=b, SIP=c};
COD_ID	Description	Command	Parameter

C3503	Allow status message output	ALW-STS-MSG	:CODE=a;
C4301	Allow device test	ALW-TST	:DEV=a, MODE=b {,BSC=c};
C9018	Correct of alarm status	AUDIT-ALARM	
C5410	Block AMP	BLK-AMP	:{BSC=a, BCP=b}/{BTS=a}, SECT=c, FA=d;
C5405	Block BTS Link	BLK-BLNK	:{BSC=a, BCP=b}/{BTS=a}, LINK=c;
C5400	Block BTS	BLK-BTS	:{BSC=a, BCP=b}/{BTS=a};
C5486	Block CCC	BLK-CCC	:{BSC=a, BCP=b}/{BTS=a}, DU=c, SLOT=d;
C5485	Block Channel Element	BLK-CE	:{BSC=a, BCP=b}/{BTS=a}, DU=c, SLOT=d, SNODE=e;
C5437	Block SIP	BLK-SIP	:BSC=a, SIP=b;
C5439	Block SVE	BLK-SVE	:BSC=a, SIP=b, SVP=c, SVE=d;
C5438	Block SVP	BLK-SVP	:BSC=a, SIP=b, SVP=c;
C5116	Change Access Channel Parameter value	CHG-AC-PARA	:{BSC=a, BCP=b}/{BTS=a}, FA=c, SECT=d [,Param];
C5119	Change Access Channel message	CHG-ACC-MSG	:{BSC=a, BCP=b}/{BTS=a}, FA=c, SECT=d [,Param];
C1023	Change BCP Alarm	CHG-ALM-BCP	:{BSC=a[,BCP=b]},REG=c,BIT=d,ALM_CODE=e,DEV=f,SECT=g,CDMA=h, EQUIP=i;
C3113	Change BCP Device Control	CHG-BCP-CTRL	:CTRL=a{,BSC=b,BCP=c}/{,BTS=b},BLNKCTRL=d,CEDYNCTRL=e,CDMACHDYNCTRL=f,FAILTIME=g;

COD_ID	Description	Command	Parameter
C4704	Change HICA BER	CHG-BER-HICA	:LINKTYPE=a,BERTHR=b,SYNCTHR=c,SLIPTHR=d,CRCBPLRTHR=e;
C4703	Change BER Diagnostic	CHG-BER-TST	:{BSC=a,BCP=b}/{BTS=a},AUTOFLAG=c,TERM=d,THRESHOLD=e;
C5105	Change BLINK Configuration	CHG-BLNK-CONF	:{BSC=a, BCP=b}/{BTS=a}, LINK=c[,USRPOFF];
C3509	Change BLINK Error Parameter	CHG-BLNK-ERR	:TYPE=a, {BSC=b,BCP=c}/{BTS=b}, WINSIZE=d, FREERATE=e;
C5134	Change BSC Configuration Information	CHG-BSC-CONF	:BSC=a [, PARAM];
C5100	Change BTS Configuration Information	CHG-BTS-CONF	:{BSC=a, BCP=b}/{BTS=a} [,Param];
C5112	Change CDMA Channel Configuration	CHG-CDMA-CONF	:{BSC=a, BCP=b}/{BTS=a}, FA=c [,Param];
C5102	Change CDMA Information	CHG-CDMA-INFO	:FA=a, CHNUM=b;
C5114	Change Channel Element Type	CHG-CE-TYPE	:{BSC=a, BCP=b}/{BTS=a}, DU=c, SLOT=d, SNODE=e, TYPE=f [,Param];
C5132	Change Forward Link Power Control Data Set1	CHG-FPC1-INFO	:{BSC=a, BCP=b}/{BTS=a}, FA=c, SECT=d [,Param];
C5144	Change Forward Link Power Control Data Set2	CHG-FPC2-INFO	:{BSC=a, BCP=b}/{BTS=a}, FA=c, SECT=d [,Param];

COD_ID	Description	Command	Parameter

C5113	Change Forward Link Power Data Value	CHG-FWDP-INFO	:{BSC=a, BCP=b}/{BTS=a}, FA=c, SECT=d [,Param];
C5142	Change NEBR Priority	CHG-NEBR-PRI	:{BSC=a, BCP=b}/{BTS=a}, SECT=c, FA=d, INDEX=e [,Param];
C9015	Change OPC Information	CHG-OPC	:BSC=a [, OPC=b][, MAXLNK=c];
C3304	Change Overload Threshold Value	CHG-OVLD-THR	:{BSC=a, BCP=b}/{BTS=a}, DEV=c, CRI=d, MAJ=e, MIN=f, ONSET=g;
C5118	Change Paging Channel Parameter	CHG-PC-PARA	:{BSC=a, BCP=b}/{BTS=a}, FA=c, SECT=d [, PC=e], PCGAIN=f;
C4403	Change Period TEST	CHG-PED-TST	:DEV=a, {BSC=b, BCP=c}/{BTS=b},DEVID=d,STIM=e,ETIM=f,CNT=g;
C5117	Change Pilot/Sync Channel Parameter	CHG-PSC-PARA	:{BSC=a, BCP=b}/{BTS=a}, FA=c, SECT=d [,Param];
C4503	Change Mobile MARKOV Register	CHG-REG-MARK	:MIN=a,SCM=b,BTS=c,RATE=d;
C5120	Change RF Control Card Information	CHG-RFC-PARA	:{BSC=a, BCP=b}/{BTS=a}, FA=c, SECT=d [,Param];
C5133	Change Reverse Link Power Control Data Value	CHG-RPC-INFO	:{BSC=a, BCP=b}/{BTS=a}, FA=c, SECT=d [,Param];
C5104	Change Sub Cell Data Value	CHG-SCEL-INFO	:{BSC=a, BCP=b}/{BTS=a}, FA=c, SECT=d [,Param];
C5101	Change Sector Information Data Value	CHG-SECT-INFO	:{BSC=a, BCP=b}/{BTS=a}, SECT=c [,Param];
C5106	Change System DATA	CHG-SYS-PARA	:{BSC=a, BCP=b}/{BTS=a}, FA=c, SECT=d [,Param];
COD_ID	Description	Command	Parameter

C5115	Change Traffic Channel Parameter	CHG-TC-PARA	:{BSC=a, BCP=b}/{BTS=a}, FA=c [,Param];
C4303	Change Automatic Test Information	CHG-TST	:DEV=a, BSC=b, TERM=c, CNT=d;
C1018	Check BSC Alarm	CHK-BSC-ALM	:BSC=a;
C1017	Check BTS Alarm	CHK-BTS-ALM	:{BSC=a, BCP=b}/{BTS=a};
C1003	Clear Audio Alarm	CLR-AUD-ALM	
C5731	Deactivate ACP	DACT-ACP	:BSC=a, ACP=b;
C5710	Deactivate AMP	DACT-AMP	:{BSC=a, BCP=b}/{BTS=a},SECT=c,FA=d;
C5705	Deactivate BTS Link	DACT-BLNK	:{BSC=a, BCP=b}/{BTS=a}, LINK=c;
C5700	Deactivate BTS	DACT-BTS	:{BSC=a, BCP=b}/{BTS=a};
C5762	Deactivate BTU	DACT-BTU	:{BSC=a, BCP=b}/{BTS=a};
C5786	Deactivate CCC	DACT-CCC	:{BSC=a, BCP=b}/{BTS=a}, DU=c, SLOT=d;
C5785	Deactivate Channel Element	DACT-CE	:{BSC=a, BCP=b}/{BTS=a}, DU=c, SLOT=d, SNODE=e;
C5763	Deactivate GCIN HRNA	DACT-GCIN	:HRNA=a;
C5767	Deactivate BIN HNEA	DAC-HNEA-BIN	:{BSC=a, BCP=b}/{BTS=a},HNEA=c;
C5766	Deactivate LCIN HNEA	DACT-HNEA-LCIN	:BSC=a,HNEA=b;
C5765	Deactivate BIN HRNA	DACT-HRNA-BIN	:{BSC=a, BCP=b}/{BTS=a},HRNA=c;

COD_ID	Description	Command	Parameter
C5764	Deactivate LCIN HRNA	DACT-HRNA-LCIN	:BSC=a, HRNA=b;

C9012	Deactivate Link	DACT-LINK	:BSC=a, LINK=b;
C5735	Deactivate Link Set	DACT-LSET	:BSC=a;
C5737	Deactivate SIP	DACT-SIP	:BSC=a, SIP=b;
C5739	Deactivate SVE	DACT-SVE	:BSC=a, SIP=b, SVP=c, SVE=d;
C5738	Deactivate SVP	DACT-SVP	:BSC=a, SIP=b, SVP=c;
C9003	Define DPC	DEF-DPC	:BSC=a, DPC=b;
C9005	Define Link	DEF-LINK	:BSC=a, LINK=b, ACTIND=c, TSTSLC=d;
C9004	Define Link Set	DEF-LSET	:BSC=a, LSHAR=b, ACTIND=c;
C9016	Define SCCP	DEF-SCCP	:BSC=a, SYSID=b, SSN=c;
C9006	Delete DPC	DEL-DPC	:BSC=a;
C2008	Delete Loading Block	DEL-LDNG-BLK	:BSC=a [, BLKTYPE=b], BLKNAME=c;
C9008	Delete Link	DEL-LINK	:BSC=a, LINK=b;
C9007	Delete Link Set	DEL-LSET	:BSC=a;
C4502	Delete Mobile MARKOV Register	DEL-REG-MARK	:MIN=a;
C9017	Delete SCCP	DEL-SCCP	:BSC=a;

COD_ID	Description	Command	Parameter
C5016	Confirm Access Channel Parameter	DIS-AC-PARA	:{BSC=a, BCP=b}/{BTS=a}, FA=c, SECT=d, PC=e;

C5019	Output ACC Message	DIS-ACC-MSG	:{BSC=a, BCP=b}/{BTS=a}, FA=c, SECT=d;
C5068	Output ACP Configuration Information	DIS-ACP-CONF	:BSC=a;
C4508	Output Active MARKOV Call	DIS-ACT-MARK	
C1014	Output ACP Alarm	DIS-ALM-ACP	[:BSC=a [, ACP=b [, SRC=c]]];
C1022	Output BCP Alarm	DIS-ALM-BCP	:{BSC=a [, BCP=b]}/{BTS=c};
C1006	Output Alarm Information	DIS-ALM-INFO	N :AN=a;
C1004	Output Current Alarm Status	DIS-ALM-STS	{[:BSC=a [, BCP=b]]}/{[BTS=a]}[,DETAIL=c];
C5010	Output AMP Configuration Information	DIS-AMP-CONF	{BSC=a, BCP=b}/{BTS=a}, SECT=c;
C1005	Output Audio Alarm	DIS-AUD-ALM	
C4512	Output BCP Call Number	DIS-BCP-CALL	:{BSC=a, BCP=b}/{BTS=a},FA=c;
C3109	Output BCP Device CTRL	DIS-BCP-CTRL	:{BSC=a, BCP=b}/{BTS=a};
C4702	Output BER Information	DIS-BER-INFO	:PROC=a,BSC=b;
C3208	Output BIN HNEA Status	DIS-BIN-HLEA	:{BSC=a, BCP=b}/{BTS=a};
C3206	Output BIN Node Status	DIS-BIN-NODE	:{BSC=a, BCP=b}/{BTS=a};
C3203	Output BIN Processor Status	DIS-BIN-PRC	:{BSC=a, BCP=b}/{BTS=a};
COD_ID	Description	Command	Parameter
C2004	Output Block Loading History Function	DIS-BLLD-HIS	:{BSC=a, PROC=b [,{ACP=c}/{SIP =c, SVP=d}/{BCP=c}]}/{BTS=a, PROC=b [, DU=c [,CCC=d]]}, BLKNAME=e;
C5005	Output BLINK Configuration	DIS-BLNK-CONF	:{BSC=a, BCP=b}/{BTS=a};

C3508	Output BLINK Error Parameter	DIS-BLNK-ERR	:{BSC=a, BCP=b}/{BTS=a};
C3004	Output BLINK Status	DIS-BLNK-STS	:{BSC=a, BCP=b}/{BTS=a};
C3401	Output BSC ACP Information	DIS-BSC-ACP	:BSC=a;
C5034	Output BSC Configuration Information	DIS-BSC-CONF	
C5081	BSC Information Output	DIS-BSC-INFO	
C3102	BTS Card Status Output	DIS-BTS-CARD	:{BSC=a, BCP=b}/{BTS=a}, CARD=c;
C5000	Confirm BTS Configuration Information	DIS-BTS-CONF	:{BSC=a, BCP=b}/{BTS=a};
C5082	Confirm & Output BTS Operation Information	DIS-BTS-INFO	:{BSC=a, BCP=b}/{BTS=a};
C3101	Output BCP Processor Status	DIS-BTS-PRC	:{BSC=a [, BCP=b]}/{BTS=a};
C3402	Output BTS SACA Status	DIS-BTS-SACA	:{BSC=a [, BCP=b]}/{BTS=a};
C5062	Output BTU Configuration	DIS-BTU-CONF	:{BSC=a, BCP=b}/{BTS=a};
C3307	Output Call Number	DIS-CALL-STS	:PROC=a, {BSC=b, BCP=c}/{BTS=b};

COD_ID	Description	Command	Parameter
C3103	Output CC Status	DIS-CC-STS	:{BSC=a, BCP=b}/{BTS=a};
C3001	Output CCP Status	DIS-CCP-STS	[:BSC=a];
C2017	Output CCP Version	DIS-CCP-VER	:BSC=bsc, SIDE=b;

C5012	Confirm CDMA Configuration Information	DIS-CDMA-CONF	:{BSC=a, BCP=b}/{BTS=a};
C5002	Confirm CDMA Channel Information	DIS-CDMA-INFO	
C3108	Output CDMA Channel Information	DIS-CDMACH-LIST	:{BSC=a, BCP=b}/{BTS=a};
C3106	Output CE Status	DIS-CE-STS	:{BSC=a, BCP=b}/{BTS=a},DU=c;
C5090	Output CDMA Channel List Message	DIS-CHLIST-MSG	:{BSC=a, BCP=b}/{BTS=a},SECT=c;
C0001	Output Command History	DIS-CMD-HIS	:DATE=a, STIME=b, ETIME=c, TYPE=d, CODE=e;
C9000	Output CSB Configuration Information	DIS-CSB-INFO	[:BSC=a];
C9019	Output CSB Status	DIS-CSB-STS	[:BSC=a];
C4509	Output Deactivated MARKOV Call	DIS-DACT-MARK	
C6017	Output statistic data Collection Status	DIS-DATA-COLL	

COD_ID	Description	Command	Parameter
C5014	Output DU Configuration Information	DIS-DU-CONF	:{BSC=a, BCP=b}/{BTS=a}, SHELF=c [, SLOT=d];
C5089	Output Extended System Parameter	DIS-EXTSYS-MSG	:{BSC=a, BCP=b}/{BTS=a}, SECT=c, FA=d;

C1021	Output Fault Information	DIS-FLT-INFO	:FN=a;
C5032	Confirm BTS Forward Link Power Control Value	DIS-FPC1-INFO	:{BSC=a, BCP=b}/{BTS=a}, FA=c, SECT=d;
C5044	Confirm BTS Forward Link Power Control Value	DIS-FPC2-INFO	:{BSC=a, BCP=b}/{BTS=a}, FA=c, SECT=d;
C5013	Confirm Subcell Forward Link Power Value	DIS-FWDP-INFO	:{BSC=a, BCP=b}/{BTS=a}, FA=c, SECT=d;
C5063	Output GCIN Configuration	DIS-GCIN-CONF	
C3204	Output GCIN Node Status	DIS-GCIN-NODE	
C3201	Output GCIN Processor Status	DIS-GCIN-PRC	
C3403	Output GPS Status	DIS-GPS-STS	
C3209	Output GW Node Status	DIS-GW-NODE	:NODETYPE=a,{BSC=b, BCP=c}/{BTS=b}
C5067	Output BIN HNEA Status	DIS-HNEA-BIN	{BSC=a, BCP=b}/{BTS=a};
C5066	Output LCIN HNEA Status	DIS-HNEA-LCIN	:BSC=a;
C5065	Output BIN HRNA Status	DIS-HRNA-BIN	:{BSC=a, BCP=b}/{BTS=a};
COD_ID	Description	Command	Parameter
C5064	Output LCIN HRNA Status	DIS-HRNA-LCIN	:BSC=a;
C1007	Supply Output-Inhibited alarm information	DIS-INH-ALM	
C1008	Supply Output-inhibited Fault Information	DIS-INH-FLT	

C6003	Output Output-inhibited Fault Statistics List	DIS-INH-MSG	
C3502	Output Output-inhibited Status Messages List	DIS-INH-STS	
C3207	Output LCIN HNEA Node Information	DIS-LCIN-HNEA	:BSC=a;
C3205	Output LCIN Node Status	DIS-LCIN-NODE	:BSC=a;
C3202	Output LCIN Processor Status	DIS-LCIN-PRC	:BSC=a;
C2003	Loading Table Output Function	DIS-LDNG-TBL	:BSC=a, PROC=b;
C9001	Output Link Information	DIS-LINK-INFO	:BSC=a, LINK=b;
C5036	Confirm MSC Link Channel Configuration Information	DIS-MCH-CONF	:BSC=a, LINK=b;
C5035	Output MSC Link Configuration Information	DIS-MLNK-CONF	:BSC=a;
COD_ID	Description	Command	Parameter
C3005	MSC Link Status Output	DIS-MLNK-STS	:BSC=a, LINK=b;
C0002	Output Message History	DIS-MSG-HIS	:DATE=a, STIME=b, ETIME=c, TYPE=d, CODE=e;
C5042	Confirm BTS Neighbor List	DIS-NEBR-INFO	:{BSC=a, BCP=b}/{BTS=a}, SECT=c, FA=d;
C3306	Output Out Of Service Status	DIS-OOS-STS	:DEV=a, TYPE=b;
C3301	Output CPU Overload Status	DIS-OVLD-STS	:PRC=a, {BSC=b [,BCP=c]}/{BTS=b};

C3302	Output CPU Overload Limit	DIS-OVLD-THR	:PRC=a, {BSC=b [,BCP=c]}/{BTS=b};
C5018	Confirm Paging Channel Parameter	DIS-PC-PARA	:{BSC=a, BCP=b}/{BTS=a}, FA=c, SECT=d, PC=e;
C4003	Output periodic Test Information	DIS-PED-INFO	:DEV=a, BSC=b;
C5883	Output PLD Information	DIS-PLD-INFO	[:BSC=a];
C5031	Output PN Cell Information	DIS-PN-CELL	[:PILOT=a];
C2005	Processor Loading History Function	DIS-PRLD-HIS	:{BSC=a, PROC=b [, {ACP=c}/{SIP=c[,SVP=d]}/{BCP=c}]}/{BTS=a, PROC=b [,DU=c [,CCC=d]]};
C5017	Confirm Pilot/Sync Channel Parameter	DIS-PSC-PARA	:{BSC=a, BCP=b}/{BTS=a}, FA=c, SECT=d;
C4507	Confirm Mobile MARKOV Register	DIS-REG-MARK	
C5020	Output RFC Parameter Function	DIS-RFC-PARA	:{BSC=a, BCP=b}/{BTS=a}, FA=c, SECT=d;
COD_ID	Description	Command	Parameter
C5033	Confirm BTS Reverse Link Power Control Value	DIS-RPC-INFO	:{BSC=a, BCP=b}/{BTS=a}, FA=c, SECT=d;
C4002	Output Reverse Link Test Information	DIS-RSV-INFO	:DEV=a, BSC=b;
C9002	Output SCCP Information	DIS-SCCP-INFO	[:BSC=a];
C5004	Confirm Subcell Data Value	DIS-SCEL-INFO	:{BSC=a, BCP=b}/{BTS=a}, SECT=c, FA=d;

C5001	Confirm Sector Information	DIS-SECT-INFO	:{BSC=a, BCP=b}/{BTS=a}, SECT=c;
C5004	Confirm Subcell Data Value	DIS-SCEL-INFO	:{BSC=a, BCP=b}/{BTS=a}, CFID=c, SECT=d;
C5003	Confirm Subcell Key	DIS-SCEL-KEY	{BSC=a, BCP=b}/{BTS=a},SECT=c,CFID=d;
C5001	Confirm Sector Information	DIS-SECT-INFO	:{BSC=a, BCP=b}/{BTS=a}, SECT=c;
C5037	Confirm & Output SIP Configuration	DIS-SIP-CONF	:BSC=a;
C3002	Output SIP Status	DIS-SIP-STS	:BSC=a [,SIP=b];
C6000	Output List about statistic item	DIS-STAT-ITEM	
C6001	Output Activated Statistic Item	DIS-STAT-JOB	[:BSC=a];
C3501	Confirm Status Information	DIS-STS-INFO	[:CODE=a];
C5039	Confirm & Output of SVE Configuration in SVP	DIS-SVE-CONF	:BSC=a, SIP=b, SVP=c;
COD_ID	Description	Command	Parameter
C3004	Output Vocoder Status	DIS-SVE-STS	:BSC=a, SIP=b [, SVP=c];
C5038	Confirm & Output SVP Configuration in SIP	DIS-SVP-CONF	:BSC=a, SIP=b;
C3003	Output SVP Status	DIS-SVP-STS	:BSC=a [, SIP=b];
C5087	Output Sync-Channel Message	DIS-SYNC-MSG	:{BSC=a, BCP=b}/{BTS=a}[, SECT=c][, FA=d];

C5006	Confirm BTS System Parameter	DIS-SYS-PARA	:{BSC=a, BCP=b}/{BTS=a}[, SECT=c][, FA=d];
C5884	Confirm System Version	DIS-SYS-VER	:BSC=a;
C5088	Output System parameter Message	DIS-SYSPARA-MSG	:{BSC=a, BCP=b}/{BTS=a}[, SECT=c][, FA=d];
C5015	Confirm Traffic Channel Parameter	DIS-TC-PARA	:{BSC=a, BCP=b}/{BTS=a}, FA=c;
C3105	Output TCE Status	DIS-TCE-STS	:{BSC=a, BCP=b}/{BTS=a}, DU=c;
C3404	Confirm TSGA Status	DIS-TSGA-STS	:BSC=a;
C4001	Confirm Test Information	DIS-TST-INFO	:BSC=c;
C2016	Run CCP New PKG	DRV-CCP-SBY	:BSC=a;
C1009	Inhibit Alarm Message output	INH-ALM-MSG	:AN=a;
C1019	Inhibit Alarm Status output	INH-ALM-STS	
C1010	Inhibit Audible Alarm	INH-AUD-ALM	[:GRD=a];
COD_ID	Description	Command	Parameter
C6304	Inhibit daily Statistics output	INH-DRPT-MSG	:BSC=a;
C1011	Inhibit Fault Message output	INH-FLT-MSG	:FN=a;
C6303	Inhibit hourly statistics output	INH-HRPT-MSG	:BSC=a;
C9013	Inhibit use of LINK	INH-LINK	:BSC=a, LINK=b;
C6305	Inhibit monthly statistics output	INH-MRPT-MSG	:BSC=a;

C4402	Inhibit periodic diagnostic	INH-PED-TST	:DEV=a,{BSC=b, BCP=c}/{BTS=b}/{BSC=a, SIP=b};
C3504	Inhibit Status Message Output	INH-STS-MSG	:CODE=a;
C4302	Inhibit automatic test	INH-TST	:DEV=a,MODE=b,BSC=c;
C2015	Return CCP Old Package	REV-CCP-SBY	:BSC=a;
C5342	Remove NEBR	RMV-NEBR	:{BSC=a, BCP=b}/{BTS=a},SECT=c,FA=d,NBRPN=e;
C2002	Loading Partial Block	RPL-LDNG-BLK	:{BSC=a [, BCP=b]/[, SIP=b]}/{BTS=c}, BLKTYPE=d, BLKNAME=e, VERSION=f;
C2009	Restart BTS CARD	RST-BTS-CARD	:{BSC=a, BCP=b}/{BTS=a} [, Param];
C2011	Restart CCP	RST-CCP-PRC	:CCP=a;
C2013	Start CCP Standby Loading	RST-CCP-SBY	:BSC=a, VERSION=b;
C2001	Restart function of Processor	RST-LDNG-PRC	:{BSC=a,PROC=b[,{ACP=c}/{SIP=c ,SVP=d [,SVE=e]]/{BCP=f}]}}/{BTS=a, PROC=b} , SIDE=c, LEVEL=d;

COD_ID	Description	Command	Parameter
C6217	Stop Collection of Statistics	STOP-DATA-COLL	:BSC=a;
C6201	Stop statistic job on going	STOP-STAT-JOB	:BSC=a, JOB=b, MPRD=c ;
C4505	Stop TEST CALL	STOP-TEST-CALL	MIN=a;
C4202	Stop Diagnostic	STOP-TST	:DEV=a, {BSC=b, BCP=c}/{BTS=b},SIP=d;
C6117	Start Statistic Collection	STRT-DATA-COLL	:BSC=a;
C6110	Start Alarm Statistics	STRT-STAT-ALM	:BSC=a [, BCP=b], ITEM=c, MPRD=d, MTIM=e;

C6118	Start CAI Statistics	STRT-STAT-CAI	:BSC=a [, BCP=b], MPRD=c, MTIM=d;
C6104	Start Channel Element Statistic Item	STRT-STAT-CE	:BSC=a [, BCP=b], MPRD=c, MTIM=d;
C6109	Start Fault Statistics	STRT-STAT-FLM	:BSC=a [, BCP=b], ITEM=c, MPRD=d, MTIM=e;
C6103	Start Handoff Statistics item	STRT-STAT-HDOF	:BSC=a [, BCP=b], ITEM=c, MPRD=d, MTIM=e;
C6106	Start Link statistics item	STRT-STAT-LINK	:BSC=a [, BCP=b], MPRD=c, MTIM=d ;
C6113	Start LR Statistics item	STRT-STAT-LR	:BSC=a, MPRD=b, MTIM=c;
C6121	Start No.7 MTP Statistics item	STRT-STAT-MTP	:BSC=a, ITEM=b, MPRD=c, MTIM=e;
C6112	Start Paging statistics item	STRT-STAT-PAG	:BSC=a [, BCP=b], MPRD=c, MTIM=d ;
C6111	Start BTS performance statistics item	STRT-STAT-PERF	:BSC=a, BCP=b, MPRD=c, MTIM=d;

COD_ID	Description	Command	Parameter
C6108	Start Processor statistics item	STRT-STAT-PRC	:BSC=a [, BCP=b][, SIP=c], ITEM=d, MPRD=e,MTIM=f;
C6107	Start RF Statistics item	STRT-STAT-RF	:BSC=a [, BCP=b], MPRD=c, MTIM=d;
C6120	Start RF Fault Statistics item	STRT-STAT -RFF	:BSC=a [, BCP=b], MPRD=c, MTIM=d;
C6122	Start NO.7 SCCP Statistics item	STRT-STAT-SCCP	:BSC=a [, BCP=b], MPRD=c, MTIM=d;
C6102	Start Traffic Statistics item	STRT-STAT-TRAF	:BSC=a [, BCP=b], ITEM = c, MPRD=d, MTIM=e;

C6105	Start Vocoder Statistics item	STRT-STAT-VOC	:BSC=b [, SIP=c], MPRD=e, MTIM=f;
C4504	Allow Reserved Test	STRT-TEST-CALL	:MIN=a, CALLTYPE=b, DATATYPE=c;
C4201	Start Reverse Device Test	STRT-TST	:DEV=a, {BSC=b, BCP=c}/{BTS=b}, DEVID=c, STIM=d, LEVEL=e, TERM=f, COUNT=g;
C3210	Switch HICA Processor	SWI-HICA-PRC	:PROC=a {, BSC=b, BCP=c}/{BTS=c};
C2012	Switch BTS RFC	SWT-PRC	:BSC=a,PROC=b,BCP=c,BTS=d,DU=e;
C3410	Switch TFSA	SWT-TFSA	:SWITYPE=a,TFSAID=b,ONOFF=c;
C4511	Start BCP CALL	TEST-BCP-CALL	:{BSC=a, BCP=b}/{BTS=a},FLAG=c,SECT=d,FA=e,CALLNUM=f,GAIN=g;
C4102	Test BTS Link	TST-BLNK	:{BSC=a, BCP=b}/{BTS=a}, LINK=c, LEVEL=d, CNT=e, TERM=f;
C4701	Test BLNK BER	TST-BLNK-BER	:{BSC=a, BCP=b}/{BTS=a}, LINK=c,TERM=d;

COD_ID	Description	Command	Parameter
C4104	Test each CE Device	TST-CE	:{BSC=a, BCP=b}/{BTS=a}, DUID=c, CDCA=d, SUNNODE=f, LEVEL=g, CNT=h;;
C4105	Test HRNA	TST-HRNA	:DEV=a, {BSC=b, BCP=c}/{BTS=bts}, HRNA=d, NODE=e;
C4103	Test each Vocoder Device	TST-SVE	:BSC=a, SIP=b, SVP=c, SVE=d, LEVEL=e;
C5510	Unblock blocked AMP	UBLK-AMP	:{BSC=a, BCP=b}/{BTS=a}, SECT=c, FA=d;
C5505	Unblock blocked BLINK	UBLK-BLNK	:{BSC=a, BCP=b}/{BTS=a}, LINK=c;
C5500	Unblock blocked BTS	UBLK-BTS	:{BSC=a, BCP=b}/{BTS=a};

C5586	Unblock blocked CCC	UBLK-CCC	:{BSC=a, BCP=b}/{BTS=a}, DU=c, SLOT=d;
C5585	Unblock blocked CE	UBLK-CE	:{BSC=a, BCP=b}/{BTS=a}, DU=c, SLOT=d, SNODE=e;
C5537	Unblock blocked SIP	UBLK-SIP	:BSC=a,SIP=b;
C5539	Unblock blocked SVE	UBLK-SVE	:BSC=a,SIP=b,SVP=c,SVE=d;
C5538	Unblock blocked SVP	UBLK-SVP	:BSC=a,SIP=b,SVP=c;
C9014	Uninhibit LINK restriction	UINH-LINK	:BSC=a, LINK=b;

4.5 Acronym

ACPA	Alarm Control Processor Assembly
BABB	BSC Alarm BackBoard
CCBB	Call Control processor block Back Board
CCP	Call Control Processor
CHBB	Cin High performance IPC Back Board
CIFA	Cin Interface Function board Assembly
CIN	CDMA Interconnection Network
CKBB	CKd Back Board
CKD	ClocK Distributor
COMR	COMmon Rack
CSB	Common channel Signaling Block
GUBB	GPS Unit Back Board
HICA	High performance IPC Control board Assembly
HNTA	High performance IPC Node & T1 Trunk interface Assembly
HPU	High Power amplification Unit
HRNA	High-performance IPC Routing Node Assembly
LCIN	Local CIN
MCDA	Main Control Duplication board Assembly
MSC	Mobile Switching Center
TFDA	Time & Frequency Distribution Assembly
TFSA	Time & Frequency Split Assembly
TSBB	Transcoding Selector bank Back Board
TSGA	Time & frequency Splitting Generation Assembly
VSIA	Vocoder Selector Interface Assembly
VSOA	Vocoder Selector Operation Assembly

Chapter 5 Micro-BTS Basics

5.1 System Overview and Specification

5.1.1 Overview

This document describes the Micro-BTS to be operated in CDMA system that is used 800MHz and 1.9GHz frequency band. It is located between base station controller (BSC) and Mobile station (MS). Through RF interface, it executes the radio interface between MS and BTS and also executes the wire-line interface between BTS and BSC. It directly interfaces with BSC in packet mode.
Connected and operated through T1, Micro-BTS configures the radio communication channel with MS smoothly in real time to execute (1) call handling function, (2) radio resources management function and (3) digital unit (DU) block call control processor function. They are modularized for each function according to the operation and maintenance function to detect and recover faults generated in BTS

5.1.2 Functions

(1) Radio resource management, Packet Routing, Fault Detection, Collection and report of statistics information

- Assignment and management for CDMA frequency, channel, frame off-set resource
- Routing traffic and control information from BTS to BSC
- Routing traffic and control information received from BSC to DU, BMP
- Monitoring error in BTS and reporting it to BSM
- Collecting call processing statistics information and reporting it to BSM
- Reporting hardware alarm in BTS

(2) Call processing function

- Normal call (originated / terminated call)

- Softer handoff call
- Soft handoff call
- Hard handoff call

(3) System time information management between BTS and MS

- Receiving GPS time information and management
- Providing system time information to BTS and MS

(4) Power control for forward / reverse link

(5) Transmitting and Receiving of radio signal

- Channel assignment : Pilot channel, Sync channel, Access channel, Paging channel, Traffic channel

(6) Alarm

- CDCA : Deletion, Func_Fail
- STFU : Deletion, Func_Fail
- BICA : Deletion, Func_Fail
- AIU : IDU-Fail(M&C Fail)
- RFU : SYNU_Fail, UPCU_Fail or UCVU_Fail (800MHz), DNCU_Fail
- RRU : IDU Fail, HPA Fail, LNA Fail, etc. (Reporting alarm information collected in IDU to BMP via serial path)
- RPU : RPU Fail, environmental alarm information, etc.
  (Reporting alarm information to BMP via RS-232 port)

5.1.3 System Specification

Specifications of Micro-BTS are as follows.

Item	Specifications	Remarks
Transmitter Frequency	1.965 ~ 1.970GHz (and 800MHz band)	Frequency Bandwidth
Receiver Frequency	1.885 ~ 1.890GHz (and 800MHz band)	
CDMA Channel number (FA number)	1FA	FA number according to frequency bandwidth
Sector number	3	1FA/3Sec. or 3FA/OMNI
Total Channel Elements	72	4 channel cards/cabinet
Channel Element number/ Card	18	CSM
Trunk number	1 T1 / 1 Cabinet	
Output Power	RRU : 10W AAU : 8W	

Table 5.1 Specifications of Micro-BTS

5.2 Micro-BTS Structure and Configuration

5.2.1 Micro-BTS Structure

Figure 5.1 Micro-BTS Block Diagram

5.2.2 Micro-BTS Block Configuration

Figure 5.2 Micro-BTS Block Diagram

5.3 H/W Structure and Function

The devices consisting BTS are BMP, DU, TFU, XCVU, AIU-RRU(AIDU-ARM), and RPU.

5.3.1 BMP (BTS Main Processor)

BMP Block is the top controlling part which operates, and manages BTS overall. It performs overall call processing and its maintenance, and controls the sub-processor, TFU, DU, XCVU, RRU. BMP H/W consists of CPU(MPC860) and Packet Router, HLTA Module, Alarm collector, and it connects with BSC through HLTA-B1.(Refer to figure 5.3 and figure 5.4)

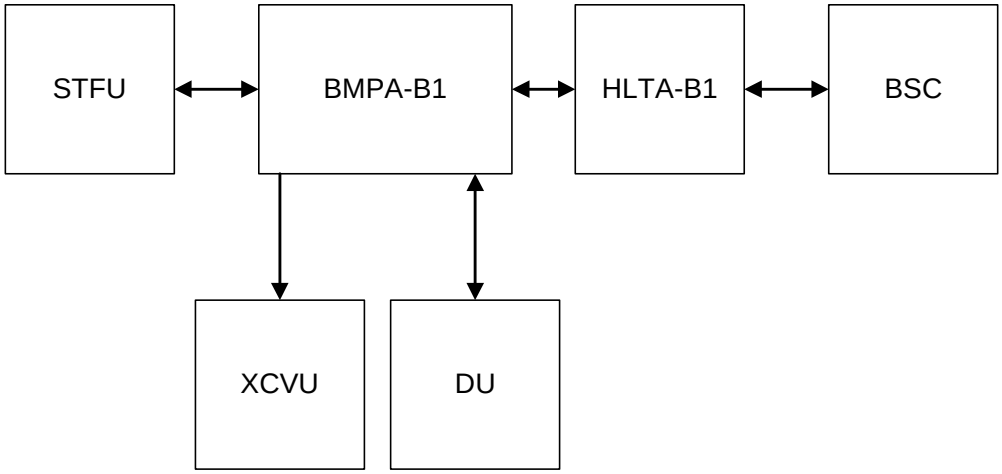

Figure 5.3 External Connection Diagram of BMP

Figure 5.4 Block Diagram of BMP

5.3.1.1 BMPA-B1 (BTS Main Processor Assembly-B1)

BMPA-B1 consists of CPU (MPC860) and Packet Router, Alarm collector, and it connects with BSC through HLTA-B1. BMPA-B1 processes call setup, call release, recovery from malfunctioning, and maintenance, it reports the related data to CCP of BSC, and it controls every unit in BTS by the command of CCP. As for capacity, it supports 1-FA (1-FA is configured up to 3-sector).

4 SCC and 2 SMC around MCP 860, CPU of BMPA, carries out node function for communication between the units and status management of Micro-BTS.

BMPA collects control and status information of RRU via SCC4 which provides communication channel with AIDU, and receives status and environmental alarm information in RPU (Rectifier Power Unit) via SCC3.

SCC1 is used as the communication path with BMPA-B1, which is equipped in 2nd cabinet. TOD from STFU is also provided via SMC1.

Clocks for Micro-BTS, SYS_CLK, EVEN_SEC are provided from STFU -B1and distributed to each unit in Micro-BTS.
BMPA-B1 has the self-diagnosis function for each module, transmission and receiving power measurement function and TPTL function and also carries out the trunk interface function for E1/T1, main processor function and arbitration master function among the channel cards. And BMPA-B1 generates 19.8MHz clock in order to provide 4.95MHz clock which is necessary to carry out baseband IF QPSK. In addition, BMPA-B1 takes charge of the role of the backboard in which CDCA-B1, BICA-B1, HNTA-B1 can be equipped.
One BMPA-B1 is designed to support 1FA/3Sector/1st cabinet. In case of expansion to 2FA/3Sector, another BMPA-B1 in the second cabinet is required and each status of 2nd cabinet is reported to BMPA-B1 of first cabinet via SCC.

5.3.1.2 HLTA-B1 (High performance IPC Link T1 Board Assembly-B1)

HLTA-B1 contains 1 T1 trunk interface and 1 Modem interface, and if it has two main functions. The first is to perform the function of trunk line interface to mutually connect BMPA-B1 with BSC through digital trunk. The second is to perform the function of Modem line interface to mutually connect BMPA-B1 with BSM of BSC through Telephone line. Modem is optional and is used as a sub-path for status monitoring of BTS only when trunk is abnormal.
Trunk interface of HLTA-B1 is connected serially with two twisted pair trunk cables, and It can recover signals up to 36dB cable attenuation (long-haul). A user can control transmitter pulse shape and receiver equalizer at various trunk cable lengths with the strap JP1. BMPA-B1 controls HLTA-B1 with extended CPU buses.

5.3.2 DU (Digital Unit)

DU is functionally located between XCVU and BMP, and consists of CDCA-B1 and BICA-B1. CDCA-B1 performs digital signal processing for CDMA modulation and demodulation. BICA-B1 is functionally located between CDCA-B1 and XCVU, and provides digital interface to CDCA-B1, and 4.95MHz IF interface to XCVU. BMPA-B1 transmits and receives packets of DU to/from HLTA-B1, and collects the conditions of DU. Power module

provides power to these boards. The signal flow diagram in DU is as follows. (Refer to Figure 5.5)

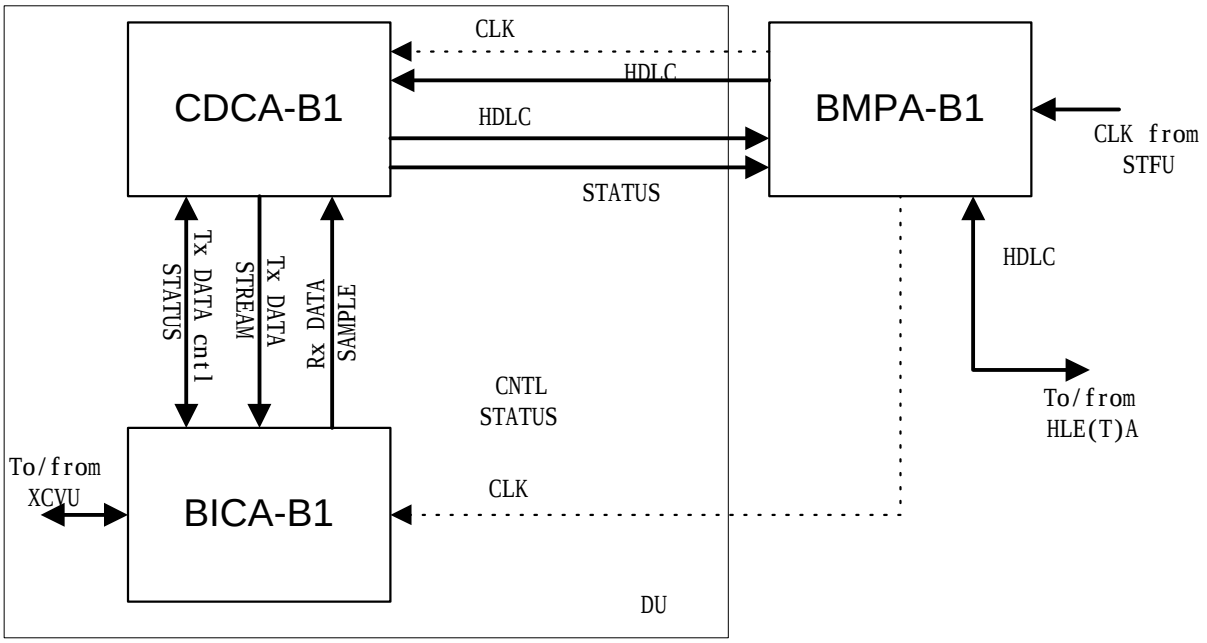

Figure 5.5 Signal flow diagram in DU

5.3.2.1 CDCA-B1 (CDMA Digital channel Card Assembly-B1)

CDCA-B1 is located in the digital unit, and its main function is the CDMA digital modulation and demodulation for processing calls from/to MS (Mobile Station). CDCA-B1 outputs CSM output to BICA-B1 for forward link, and receives 4-bit digital samples of each I and Q channel from BICA-B1 for reverse link. CDCA-B1 interfaces BSC via BMPA-B1 and HLTA-B1 to exchange data for traffic and control information.

- Main components of CDCA

Processor : i960
Cell site modem : CSM
Interface with BMPA : RS-485
Memory size : 2M Byte (SRAM)

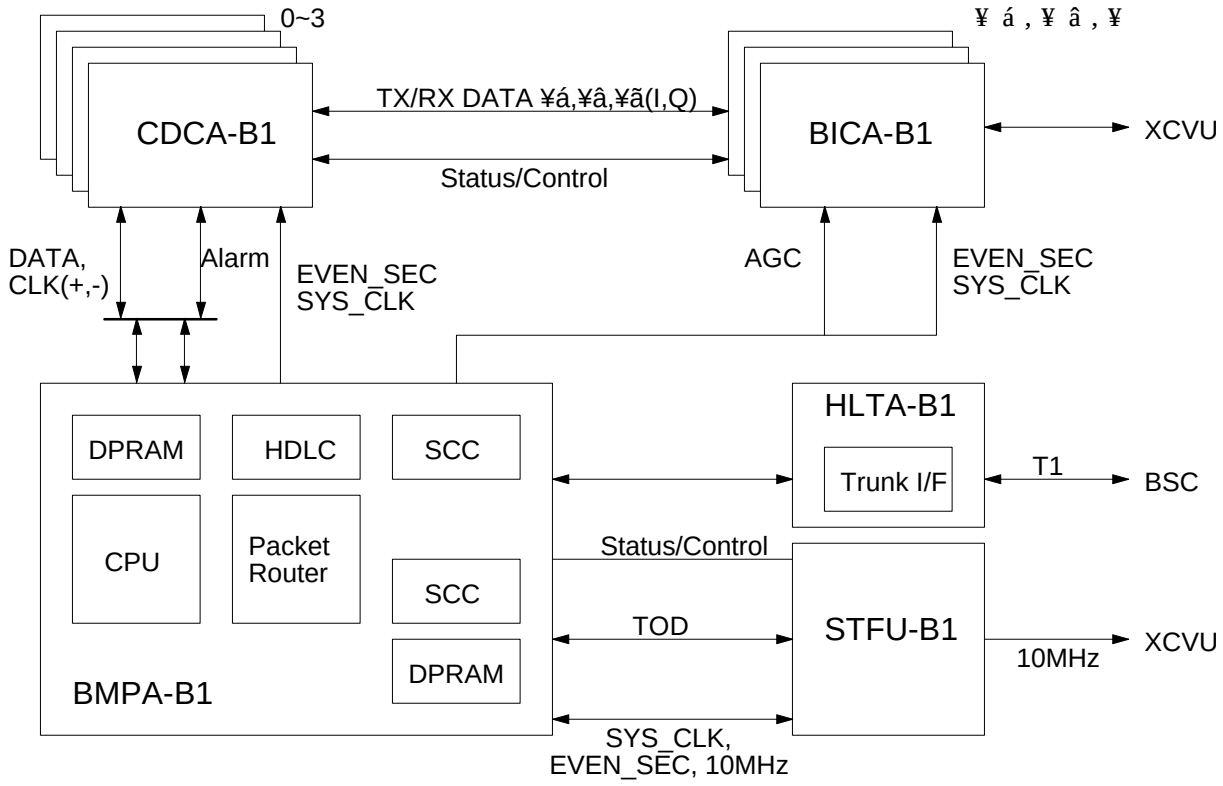

Figure 5.6 DU and external interface diagram

5.3.2.2 BICA-B1 (Base-band & IF Conversion Card Assembly-B1)

BICA-B1 is located in the digital unit. For the reverse link, 6 IF signals are inputted from XCVU. Those 6 IF signals are inserted to the corresponding BICA-B1, and IF signals are passed to BPF's (band pass filter) centered at IF frequency, and the received signal is automatic-gain-controlled to produce a fixed level of received power. Mixers in BICA-B1 uses 4.95 MHz (0&90 degrees) reference frequency to produce the baseband signals of in phase (I) and quadrature (Q) components. The I and Q baseband components are transformed to 4-bit digital samples at a rate of 9.8304 MHz. And the I digital samples for one antenna are multiplexed with the I digital samples for the other antenna, and the Q digital samples for one antenna are multiplexed with the Q digital samples for the other antenna. So the multiplexed samples are inputted to CDCA-B1 at a rate of 19.6608MHz. The AGC values are reported to BMPA-B1.

For the forward link, BICA-B1 accepts and digitally combines even and odd streams of I

and Q from up to 4-CDCA-B1, and converts the combined digital signal to analog through DAC (digital to analog conversion), modulates base-band (0~630 kHz) signal to a IF (4.95 MHz) QPSK signal, and transmits the IF signal to the corresponding XCVU. One BICA-B1 covers only one sector. BICA-B1 can report parity errors to the corresponding CDCA-B1.

5.3.3 TFU (Time & Frequency Unit)

The main purpose of TFU is to synchronize time and frequency between whole BTS's and between all the units in a BTS. Following figure is a block diagram of TFU (Refer to Figure 5.7)

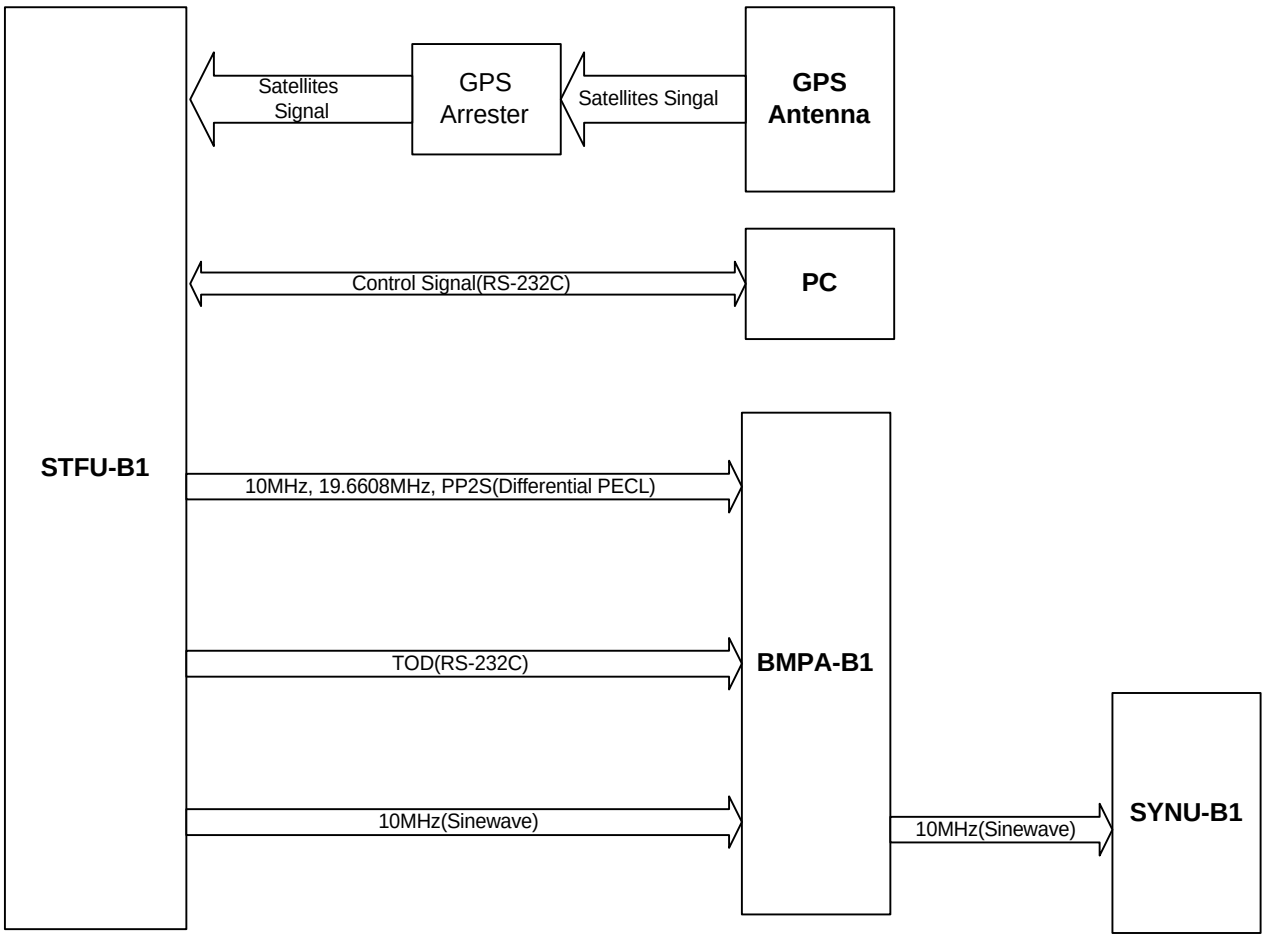

Figure 5.7 TFU-A1 Block Diagram

5.3.3.1 STFU-B1(Synchronized Time & Frequency Unit - B1)

The STFU-B1 is a GPS disciplined time and frequency generator. The instrument is a combination of a Stratum 1 level Primary Frequency Source and a Distribution System, which provides 10MHz, 19.6608MHz, 1PPS , PP2S and TOD(Time Of Day).
The STFU-B1 communicate with BMPA-B1 to monitor and to transmit the TOD by means of RS-232C serial communication.

5.3.4 RFU (Radio Frequency Unit)

RF part of Micro-BTS consists of XCVU and Ant Subsystem(AIU-RRU, AIDU-AAU).
XCVU consists of SYNU, UPCU, DNCU, LODU and XVBB. SYNU (Synthesizer Unit) provides reference frequency to RFU. UPCU (Up Conversion Unit) carries out up conversion which converts IF signal to RF signal on forward link and DNCU (Down Conversion Unit) carries out down conversion which converts RF signal to IF signal on reverse link. LODU takes charge of distribution of local signal and XVBB takes charge of interconnection of each module.
RFU consists of AIU and RRU. AIU is connected to RRU with the cable and monitors the status and alarm of RRU, controls RRU. RRU is composed of High Power Amplifier on forward link, Low Noise Amplifier on reverse link and BPF (Band Pass Filter). In accordance with field application, type of the antenna (internal antenna or external antenna), type of the amplifier, and the application of RRU is determined.
There are two types of the each module in the manual, one is used for 800MHz and the other is used for 1.9GHz described by the suffix of "-B1". The difference of both is only the operation band, they play a same roles.

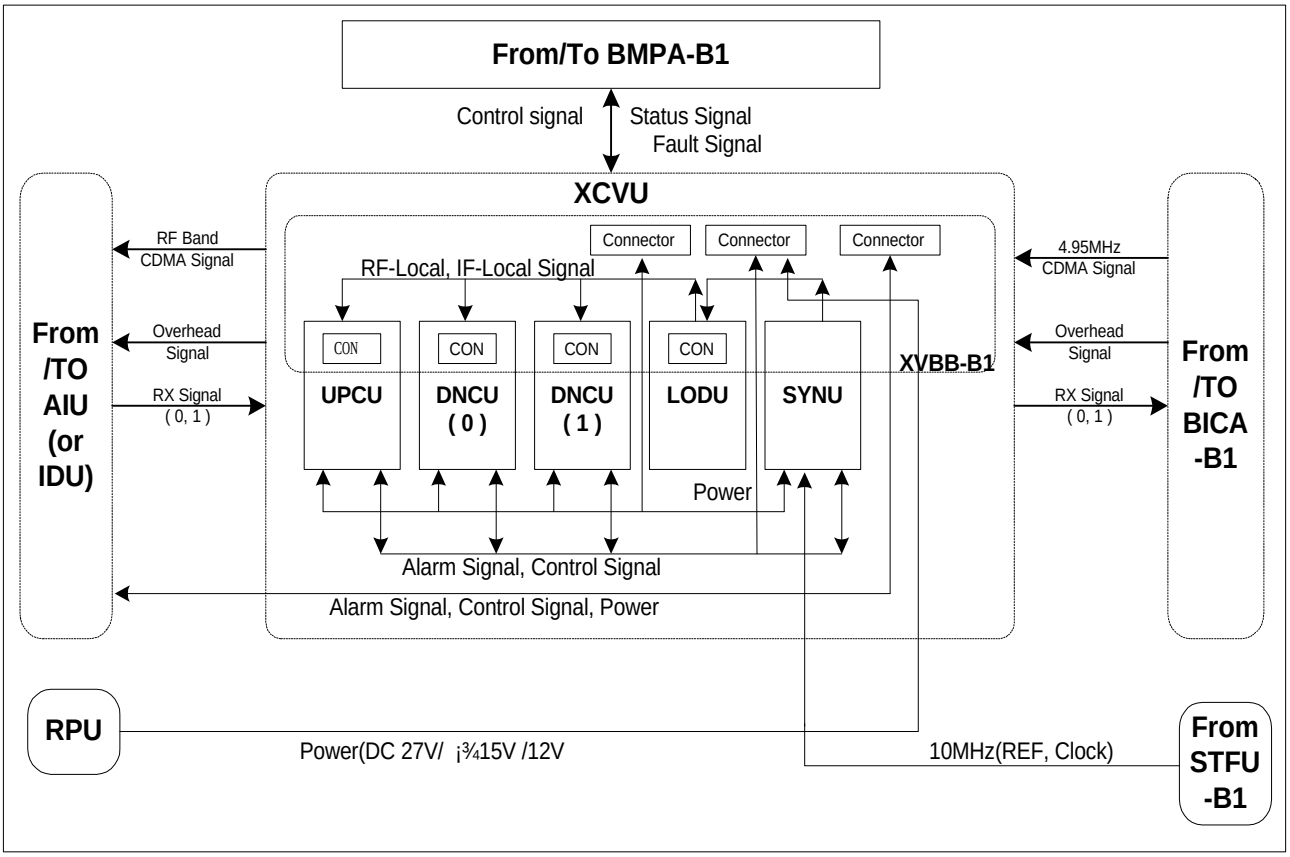

Figure 5.8 XCVU block diagram

5.3.4.1 XCVU(Transceiver Unit)

5.3.4.1.1 DNCU (Down Conversion Unit)

DNCU carries out first down-conversion of input RF signal from RRU using RF-Local signal of SYNU and carries out second frequency down-conversion to 4.95MHz by using RXIF-Local signal of SYNU after characteristic improvement to CDMA band signal via the SAW filter. This 4.95MHz signal is transferred to digital signal processing part.
DNCU is designed to get fixed output power that is not changed by acquisition of input signal by using AGC Loop.

5.3.4.1.2 UPCU (Up Conversion Unit)

UPCU carries out first frequency up-conversion of 4.95MHz IF signal from digital signal part using TXIF-Local signal of SYNU and carries out second frequency up-conversion to required frequency band using RF-Local of SYNU after characteristic improvement to CDMA band signal using the SAW filter. Up-converted second signal is transferred to RRU.

5.3.4.1.3 SYNU (Synthesizer Unit)

SYNU consists of RF-Local, TXIF-PLL, and RXIF-PLL and generates RF-Local signal whose output frequency is changed in accordance with the assigned channel, TXIF-Local signal, and RXIF-Local signal based on 10MHz sine wave of GPS receiver. The generated RF-Local signal, TXIF-Local signal and RXIF-Local signal are transferred to DNCU, UPCU.

5.3.4.1.4 LODU (Local Oscillator Distributor)

LODU distributes RF Local signal, TXIF-Local signal and RXIF-Local signal generated by SYNU to UPCU and DNCU and is equipped in XCVU as one module type.

5.3.4.1.5 XVBB (Transceiver Back Board)

XVBB takes charge of distribution of alarm and control signal between DU and XCVU and provides power from power module to AIU and XCVU. And XVBB also transfer alarm and control signal of RF shelf.

5.3.5 Antenna Subsystem

There are two types of antenna subsystems in Micro-BTS; those can be selectively applied to as operator's requirement. Antenna subsystem consists of main module which is located in antenna tower and interface module which connects with Micro-BTS. Applicable

antenna subsystems are AAU-AIDU and RRU-AIU. AAU-B1, AIDU-B1, RRU-B1, and AIU-B1 is used for 1.9GHz frequency band.

5.3.5.1 RRU-B1 and AIU-B1

5.3.5.1.1 AIU-B1 (Antenna Interface Unit)

AIU-B1 of Micro-BTS is interface part with RRU-B1 and consists of 2 Way Splitter, Bias-T and Bias-T & Duplexer.

Figure 5.9 RRU-B1 block diagram

AIU-B1 is equipped in the main unit of Micro-BTS and provides interface with RRU-B1. M & C module in AIU-B1 takes charge of status monitoring and controlling of each RRU-B1. AIU-B1 contains FSK Modem function that can communicate with RRU-B1 and reports information about communication result via SCC in BMPA-B1.
2-Way Splitter has two paths used to provide Rx signal. In case of second cabinet expansion, one path of 2-Way Splitter is connected to the first cabinet that accommodates first carrier (FA) and the other path of 2-Way Splitter is connected to the second cabinet that accommodates second carrier (FA). Bias-T that contains arrester function multiplexes RF signal and DC power, and protects from the lightening.
Duplexer is used to multiplex RF signal, DC power and FSK modem signal for monitoring and controlling RRU. Duplexer also contains the arrester for the lightening protection.
Monitor & Control Module takes charge of status monitoring and control for 1FA / 3Sector (three RRU-B1s) and contains FSK Modem for communication with RRU. Communication with BMP is completed via RS-232 protocol.

5.3.5.1.2 RRU (Remote RF Unit)

The RRU-B1 specifications of Micro-BTS are as the below table.

Item	RRU	Remark
Transmission Power	10W	1 Module
Dimension (H x W x D)	400 x 350 x 150	1 Module
Antenna	External Antenna	
Function	Rx Diversity Support	

Output power of RRU is 10Watts and it is lower than output power of Macro-BTS.
The coaxial cable is used for interface between the Main Unit. RRU and 3 coaxial cables which are connected to each sector supporting Rx diversity.
In using external Ant, two Ant. per sector are needed because the antenna of the RRU is duplex type.
BMP in Main Unit can control all of status in RRU-B1 and it is useful for operation and maintenance of Remote Module.

5.3.5.2 AAU-B1 and AIDU-B1 (1.9GHz)[1]

5.3.5.2.1 AAU-B1 (Active Antenna Unit)

AAU-B1 consists of integrated RF/antenna modules (ARM units) grouped in radiating arrays for transmit and receive. The whole RF/antenna array for the base station is tower-mounted and consisted of four ARM units and an array of four antenna groups. Each ARM is self contained and controllable by its internal micro-controller.
AAU and AIDU is used for 800MHz frequency band and they play a same roles with AAU-B1 and AIDU-B1.

(1) AAU-B1 Block Diagram

[1] In 800MHz band, AAU and AIDU are used.

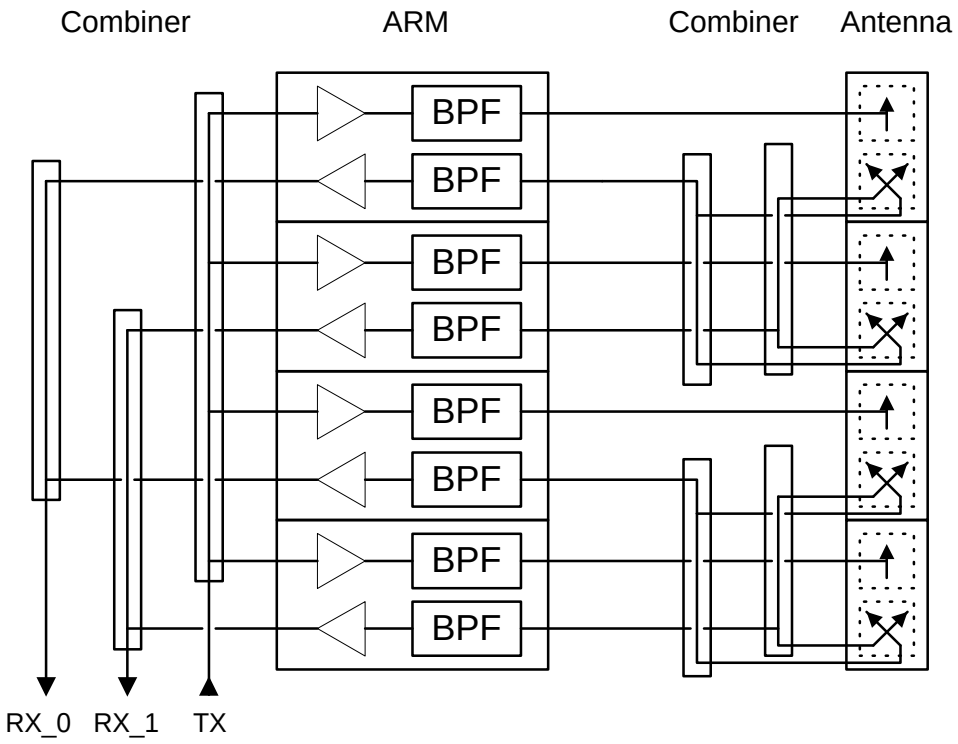

Figure 5.10 AAU-B1 Block Diagram

(2) AAU-B1 Specification

1) Tx Channel

Frequency Range : 1960 ~ 1990 MHz

Gain : 52 dB (including the antenna gain : 13 dBi,

each ARM Tx gain : 33 dB 4)

EIRP : 22 dBW

Polarization : Vertical

Hor. Beamwidth : 85.6

El. Beamwidth : 14.08

2) Rx Channel

Frequency Range : 1880 ~ 1910 MHz

Gain : 49 dB (including the antenna gain : 13 dBi,

each ARM Tx gain : 30 dB 4)

Polarization	: Dual slant linear
Hor. Beamwidth	: 87.4
El. Beamwidth	: 14.25

5.3.5.2.2 AIDU-B1 (Active antenna InDoor Unit)

AIDU-B1 is a indoor control unit and interfaces the AAU-B1 with the BTS. It relays the Tx and Rx signals, provides DC power to the ARM units, and communicates with AAU-B1 for the monitoring and control purposes.

The unit consists of 3 Bias-T blocks and controller. Each Bias-T block includes three Bias-T circuits one for Tx and the others for Rx. Tx Bias-T circuit multiplexes RF signals with DC voltage between the ARM units and AIDU-B1. It includes the 30dB gain amplifier possible to control gain of 15dB. Rx Bias-T circuit multiplexes RF signal with low frequency signaling between the ARM units and AIDU-B1. It includes the 15dB gain amplifier possible to control gain of 15dB.

The controller provides the following functions:

(1) Communication with the ARM

(2) Monitoring of the ARM units and radiating arrays status

(3) Communication with BMPA-B1

(4) Saving of system configuration

5.3.6 BTU (Micro-BTS Test Unit)

The functions of BTU are measurement of transmission/receiving power level, measurement of VSWR and measurement of TPTL, etc. And these functions are carried out in RRU. Status data and alarm signal in RRU is transferred to AIU via modem, and the collected alarm signal in AIU is reported to BMP with RS-485 protocol and processed.

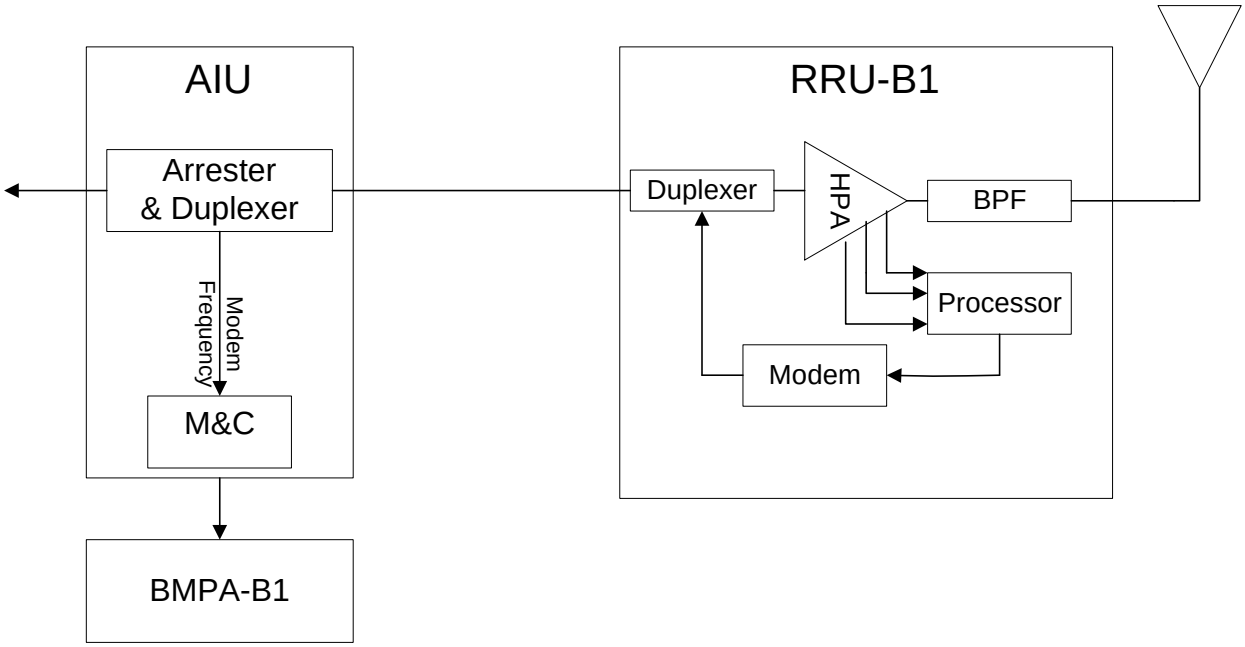

Figure 5.11 BTU block diagram

The functions of BTU are as follows

(1) Measurement of transmission power level

This function is carried out by measuring output voltage value for signal strength at the alarm output terminal of HPA Monitor in RRU. Measured value is transferred from RRU to BMP in Main Unit via the modem and linear voltage value can be checked in BSM by user.

(2) Measurement of receiving power level

This function is carried out by measuring receiving signal level value while monitoring

RSSI value in DNCU of XCVU.
Measured value is transferred to BMP of Main Unit and can be checked in BSM by user.

(3) Measurement of VSWR
User can recognize Fail or Normal by comparing signal strength value of reflected power at the alarm output terminal of HPA monitor in RRU. Measured value is transferred from RRU to BMP of Main Unit via the modem. User can check HPA status in BSM.

(4) Measurement of TPTL (Transmitter Power Tracking Loop)
This function is carried out by controlling transmission power gain at variable ATT in front of HPA in RRU.
This function is operated by S/W and every status is reported to BMP.
User can check status in BSM.

5.3.7 RPU

RPU-B1 is a power supply for Micro-BTS. It has various DC outputs needed for each units at MICRO-BTS. It has power status monitoring and report function. It has also battery back-up function.
RPU-B1 can be connected with external power supply (RPU-B2) when output capacity expansion is needed. RPU-B2 is 27V single output AC/DC converter. When RPU-B2 is connected to RPU-B1, they have load balance function.
RPU-B1 has 3 switches – AC input ON/OFF, RPU-B2 input ON/OFF, and DC outputs ON/OFF.

5.4 S/W Structure and Function

5.4.1 Overview

Micro-BTS Software, which is designed for the purpose of maximum reliability and efficiency in order to provide operation & Maintenance function and smooth interfaces between BSC and MS, complies to the air interface specifications with MS.
Micro-BTS Software has Call processing function and Operation & Maintenance function.

When the system allocates Overhead (Sync, Pilot, Access, Paging) channel and Traffic channel, Call processing function provides the Algorithm which support inter-channel Redundancy concept using duplication and inter-channel common ownership. It should provide effective Call flow with adjacent BSCs and support Variable packet size for Traffic packet.
Micro-BTS operation and Maintenance function performs generally Loading, Diagnostic, Alarm, Status, Resource management etc. And it supports the Software which improve the system reliability through removal of critical trouble factors. So the system uses the resource efficiently.
As Micro-BTS Software should perform multiple call processing simultaneously, it executes on the Operating System which supports Real time Multi-Tasking function.
Actual Operating System is applied to Micro-BTS Control Block and Traffic Channel Processing Block.
The software which is used for Micro-BTS should improve BTS performance and provide facilities for the Operation and Maintenance.

Figure 5.12 Micro-BTS Software Structure

5.4.2 Basic Functions

Micro-BTS which is located between Base Station Controller (BSC) and MS, executes the management of wireless link during incoming/outgoing call processing.
It is a network element performing various functions for wireless Call processing.
Each sub-function in Micro-BTS software is described as the following features.

5.4.2.1 Loading Function

Execution files and data files required by sub-blocks (BCP, CCC) of Micro-BTS to execute their unique functions are managed by CCP of BSC. Upon receiving the loading request from Micro-BTS system, the CCP transmits the corresponding file to Micro-BTS in accordance with the prescribed procedure to execute the initialization of the corresponding processor.

(1) Processor Restart Function

At the time of system installation or when it is impossible to maintain normal services due to a critical fault in the processor, the processor can be restarted either by Hardware recovery method (processor reloading by power on/off , reset) of which procedure begins with supply of primary power supply to the system or by on-demand processor restart method which is executed in several steps when necessary.

(2) Restart by MMC Command

At the time of Software version change or test, this loading method is used to recover the processor after processor is drop off by operator with MMC. Loading with MMC command is divided into Level 0 and Level 1. The operator can select the loading level according to pertinent data.

- BMP Level 0 Command :
  Processor restarts and requests CCP to receive the loading data. At this time, low level CDCA also restarts and recovers after loading.

- BMP Level 1 Command :
  Processor restarts from OS and receives loading block from the channel card. At this time, low level CDCA also restarts and recovers after loading.

At the time of Software version change or test of the call processing application block, CCC loading of loading functions is used to restore the system through reloading data after all processor is drop off. As RFU block consists of Main Unit and Remote Unit, the operator can recover the card assembly by restarting it with MMC command at the time of function failures in Main Unit and Remote RF block.

(3) Restart by H/W (Power, Reset)

- BMP :
  When it is impossible to maintain normal services due to a processor fault during system installation, initialization or operation, it is possible to reload BMPA with power on-off or reset. This reloading is made by first turning down all the processors in the system and then recovering them with reloading. When high level processor restarts to recover its normal state, all low level processors are recovered with reloading.

- CCC :
  When it is impossible to maintain normal services due to a processor fault during initialization of call processing application block, it is possible to reload with power on/off or reset.

5.4.2.2 Replacing of Application Block

- This is an on-line command function to be applied to a processor of the block in which a fault occurs during system operation or for which a function is added.

- If the block to be applied is running on a processor, the processor restarts to be reloaded from its high level processor.

- If the block to be applied is only loaded on a processor but has to be downloaded, only the block is downloaded from its high level processor.

When it is required to add or delete a block during operation by needs of the operator, it is

possible to load the specified block to the corresponding block by adding or deleting the block with MMC command.

5.4.2.3 Diagnostic Function

As Micro-BTS is outdoor type BTS, it is manufactured very firm. So Diagnostic function by Software is very important in a view of system reliability.
Micro-BTS has various functions including Output Control function (TPTL), Loop Back Call function, and Diagnostic function of Channel Elements etc..

- BTS Output Control (Transmit Power Tracking Loop, TPTL Adjustment function)
  This function measures the final output of BTS for each sector and each FA in order to tune it to the desired power level. It is used to adjust the radius of cells uniformly in each sector. It measures and tunes power at the final output end, which allows to correct errors due to change in the system characteristics (by the influence of temperature and the like).

- Loop Back Call function
  Loop Back call allows the base station to measure the data Tx / Rx performance of the mobile station. The base station creates traffic packets and transmits them to the mobile station, and the mobile station delays for calls and then forwards back the received packets to the base station. Then, the base station compares them with the original packets to calculate the frame errors.

- Channel Elements diagnostic function
  The Micro-BTS continuously requests as many polling messages as requested by the operator, directly to the channel elements. It compares the number of accepted and requested to understand the corresponding resource status.

5.4.2.4 Alarm and Fault Control function

This is the function to collect all alarms generated in Micro-BTS and report them to BSM.

Types of faults and alarms detected in Micro-BTS are listed below.

- Main PBA/Unit Function Failure Report
- Processor Fault Report
- Traffic Congestion and Overload Control Fault Report
- Equipment OOS (Out Of Service) Alarm Report
- Fan Fault Report
- Temperature, Door Open, Noise Fault report
- Rectifier Fault Report
- Input Power Fault Report
- System Clock Part Fault Report
- System RF Part Fault report
- Channel Element Fault report

5.4.2.5 Status Management function

The Status management function of a Micro-BTS includes Overload Control Function, Overhead CE Status Control Function, Traffic CE Status Control Function, Traffic / Control Link Status Control Function, Subcell Control Function, STFU Status Control Function, RFU Status Control Function, RRU Status Control Function, and Automatic Blocking Function etc.

- Overload control

  The Overload control is the function to prevent Micro-BTS resources from shifting into abnormal status by interrupting call services in advance. The abnormal status means two situations : in one case that the BMP is overloaded in its processing capacity and shifts into a state of being unable to provide call services ; and in the other case that handoff of existing calls cannot be made and subsequently the call services are interrupted as all the resources of TCE (Traffic Channel Element) are already allocated to newly made calls. Overload control is to prevent in advance these situations from arising.

- Overhead CE status control

Micro-BTS manages the status of overhead CEs (Pilot/Sync channel element, Paging channel element and Access channel element). It always monitors whether the current overhead CEs are normal or not, and informs the BSM when a fault occurs in an overhead CE. In the case where the overhead CE is duplicated, the standby overhead CE is activated to continue the call service. If it is not duplicated as active/standby CEs, Micro-BTS makes the current traffic CE replace the faulty overhead CEs to continue the call service.

- Traffic CE status control

Micro-BTS has the function to monitor the status of CEs activated as traffic CEs and to manage the status as common data. When a fault occurs in a traffic CE and interrupts the call service, Traffic CE status control prevents calls from being allocated to that traffic CE so that call service is not interrupted. It also executes the audit function to monitor call service status of entire traffic CEs and maintain the accurate traffic CE status at all times. In order to prevent situations where call service to a certain traffic CE is not possible because the traffic CE is thought to be setting up a call though it is actually not in the call setup stage and normal call release becomes impossible owing to some unavoidable reasons.

- Traffic / Control Link status control

This is the function by which Micro-BTS manages the Traffic Link and Control Link status as the common data so as to allow communication between Micro-BTS and BSC. It manages the channel status so that the Micro-BTS and BSC can interchange call data and control signals. It always provides information of available links.

- Subcell control

When a MS to be serviced by the subcell is not provided with the call service, system sends the fault information on the subcell to the MS so that it can be always provided with the call service by using the call services of other subcells.

- STFU status control

STFU generates the time and clock required for Micro-BTS and provides peripheral devices with the clock. It provides the TOD to BMP and the BMP broadcasts the

received TOD information to each device which need TOD information. STFU monitors a GPS status and then report them to BSM.

- RFU status control

RFU is the part which observe all status of Input / Output in Micro-BTS, and Micro-BTS monitors the status of UPCU, DNCU, SYNU, AIU. When a fault is detected in any of them, it reports the fault occurrence to the BSM.

- RRU status control

This is the part which monitors all the status of RRU. It monitors the status of RRU through AIU in Main Unit. When a fault is detected, it reports the fault occurrence to the BSM.

- Micro-BTS Automatic blocking

  MS acquires the pilot transmitted from Micro-BTS to initialize the MS data and requests the call services from the Micro-BTS to which it belongs. If this time, all communication channels connected to BSC are out of service, it is impossible to make any call service. However, as all status are normal, Micro-BTS continuously transmits the pilot and MS initializes its data with this pilot and requests the call service. In this case, Micro-BTS should not transmit the pilot so that the MS may not request the call service with its pilot. Micro-BTS automatic blocking is the function by which it controls the communication channel status and does not transmit its pilot when a fault is detected in the channel. This function is also applied to the case when a fault occurs in BSC. When Micro-BTS status is normal but BSC to which it belongs has a fault, MS cannot be provided with the call service and thus, the Micro-BTS should not transmit its pilot to the MS.

5.4.2.6 Resource Management Function

The resource management of a Micro-BTS includes Configuration information and Operation information Display function, Blocking function, Unblocking function, Operation Information changing Function, Neighbor add/delete function, and FA extend/delete function.

- Configuration Information and Operation Information Display

Micro-BTS displays the current configuration and operation information to the operator. BSM sends the configuration and operation information about the corresponding Micro-BTS, and the Micro-BTS displays the information on the BMP monitor.

- Blocking Function

The Micro-BTS has the function to block the configuration information required for all processing using MMC command. When the configuration information is blocked, the Micro-BTS excludes the corresponding resources from the call allocation resources and does not allocate any call to the resource. Objects that may be blocked are CDCA, traffic channel elements, paging channel elements, access channel elements and pilot/sync channel elements. When blocked, the corresponding resource is excluded from the call allocation resources. It is a principle to block one resource with one command but it is also possible to set the range of blocking if necessary.

- Unblocking Function

When a resource required for call processing is blocked, the Micro-BTS can unblock the resource using MMC command. Objects that may be unblocked are CDCA, traffic channel elements, paging channel elements, access channel elements and pilot / sync channel elements, as in blocking. Once unblocked, the resource which has been excluded from call allocation resources can be allocated as a call resource again. It is a principle to unblock one block with one command but it is also possible to set the range of unblocking if necessary.

- Function to change Operation Information.

Micro-BTS has the function by which the operator changes every data related to call processing and operation, and maintenance. The call processing related data includes the parameters related to handoff, and the operation and maintenance related data includes parameters related to overload control.

- Function to Add / Delete Neighbor

The operator can delete or add the list of neighbors required for Micro-BTS to execute

the handoff function. On the basis of this neighbor data, Micro-BTS executes handoffs.

- Function to Extend / Delete FA
  It is possible to extend or reduce FA on demand by the operator. All of the configurations corresponding to the extended FA are activated to be the objects of call processing and alarm processing, and such operation and maintenance functions as status control, loading and diagnostics, while the configurations corresponding to the deleted FA are inactivated to be excluded from the objects of call processing and alarm processing, and such operation and maintenance functions as status control, loading and diagnostics.

5.4.2.7 MS Call processing Function

The software function of Micro-BTS is designed to support subscriber requirement which is processed based on the request of terminal as well as to provide functions which are processed based on the Micro-BTS requirement.
This function includes MS originating call function, MS terminating Call function, Softer Handoff function, Soft handoff function, Inter-FA Hard Handoff function, Frame Offset Hard handoff function, Registration function, Order function, Feature Notification Service function, Data Burst Service function, Authentication service processing function, call Processing Simulation function, Overhead channel function, and Power Management Processing function.

- MS Originating Call Function
  When a MS requests Micro-BTS for an originating call, the Micro-BTS sets up a traffic channel, specifies the resources allocated at the Micro-BTS to the MS to execute the call processing function of the Micro-BTS and MS, and requests BSC to set up the call.

- MS Terminating Call Function

Micro-BTS sends a paging message to a MS to call the MS. When the MS requests the Micro-BTS for a terminating call, the Micro-BTS sets up a traffic channel, specifies the resources allocated at the Micro-BTS to the MS to execute the call processing function of the Micro-BTS and MS, and requests BSC to set up the call.

- Softer Handoff Function

When a MS requests Micro-BTS for 'softer add', 'softer drop', or 'softer swap' function, the Micro-BTS resets the corresponding resource so that the MS can execute the handoff function.

- Soft Handoff Function

When a BSC requests Micro-BTS for 'soft add', 'soft drop', or 'soft swap', the Micro-BTS allocates the corresponding resource so that the MS can set up/release the corresponding traffic, and transmits the resource allocated at the time of handoff to the BSC.

- Inter-FA Hard Handoff Function

When a BSC requests for 'soft add', if the corresponding traffic resources are all busy, Micro-BTS sets up a traffic corresponding to another RF and transmit it to the BSC to proceed with the call processing. In the case of Micro-BTS in which a dummy pilot or common pilot is set up, BSC executes inter-FA handoff for the corresponding MS.

- Frame Offset Hard Handoff Function

When a BSC requests for 'soft add' and the corresponding frame offset resources are all busy, Micro-BTS allocates other frame offset resources and transmits those frame offset resources to the BSC so that the BSC can execute the frame offset hard handoff.

- Registration Function

Upon registration request from MS, Micro-BTS transmits BS_Ack_Order to stop transmission from the MS and transmits the registration message of MS (power up, power down, timer base, zone base, parameter change, order, etc.) to BSC.

- Order Function

Micro-BTS executes such functions for the corresponding MSs as 'BS_Ack_Order', the command to stop transmission from MS; 'Lock Until Power Cycle Order', the command to release MS call; 'Release Order', the registration commands; Registration Reject / Accept / Request Order.

- Feature Notification Service Function

Micro-BTS executes such function for the corresponding MSs as Display, Called Party Number, Calling Party Number, Signal and Message Waiting.

- Data Burst Service Function

Micro-BTS executes the function to transmit and receive Data Burst messages to and from the corresponding MSs.

- Authentication Service Processing Function

Micro-BTS specifies the settings required for MS to execute authentication, and executes Authentication Challenge and SSD Update functions by interworking with MSC so that the MS can execute authentication.

- Call Processing Simulation Function

Micro-BTS executes such simulation functions related to call processing as Markov call, Auto Markov call and RF test call, and paging performance test and access performance test.

- Overhead Channel Function

Micro-BTS implements Redundancy Algorithm on Pilot/Sync/Access Channel and Paging channel. Micro-BTS executes dynamic processing function so that the overhead channel functions can be normally executed by setting another channel as an overhead channel when the original overhead channel has a fault and can not execute its own functions.

- Power Management Processing Function

By interworking with RFU(Radio Frequency Unit), Micro-BTS executes such functions

as Breathing, Wilting and Blossoming to manage the cell radius of Micro-BTS depending upon its performance and on demand by the operator.

5.4.2.8 BMP Software Structure

The basic software of Micro-BTS is divided into Call processing function and Operation and Maintenance function. Micro-BTS is configured with BMP and DU by device.
Primary Processor of the Micro-BTS is configured with Call processing function, System operation and System maintenance function logically. Generally, System operation function executes loading, resource management, measurement and statistics, database access function for the management of configuration and resource which is needed for Micro-BTS operation.
System maintenance function executes diagnostic function, Status monitoring function, Fault processing function, etc.
Call processing function which is the main function of the Micro-BTS executes overhead call processing and manages various handoff. Also it allocates traffic channels directly in Micro-BTS and release them.
The basic sequence of call processing is followings.
It manages each device and interfaces with a CCP in the BSC for the call processing procedures so as to control MS originating call (MS→BTS→BSC→MSC) and MS terminating call (MSC→BSC→BTS→MS). This procedure is called by 'BTS call control.
When MS requests originating call to BTS, it sends call setup requirement to BCP on access channel. Then operations related to Originating call starts in BCP (MS→ACE→ BCP).
In case of MS terminating call, MSC receives request for terminating call.
After MSC determines paging area, it sends paging message to BSC. Then CCP in the BSC transfers the paging message to BCP. Then BCP processes the operations related to terminating call.
The software structure of BMP is followings.

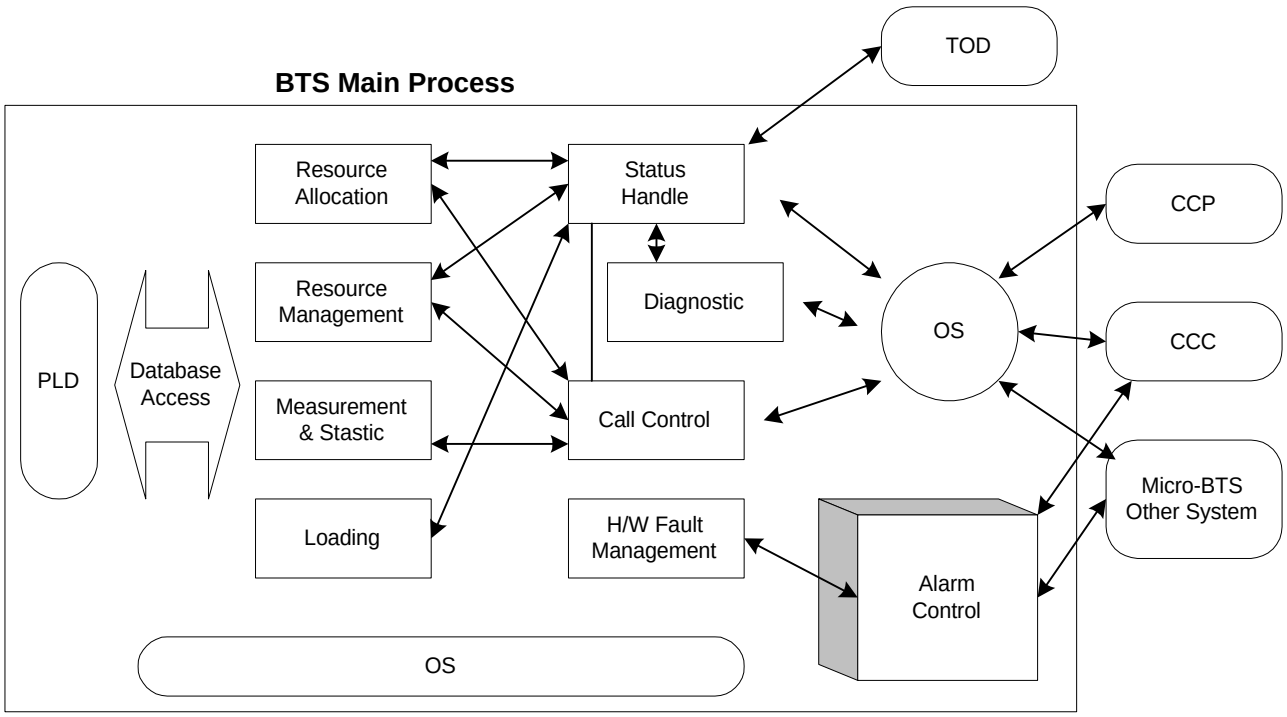

Figure 5.13 Software structure of BMP

5.4.2.9 Software structure of DU

The traffic resource is determined by the Channel elements of Channel card. The determined Traffic resource is important factor to determine the channel capacity of a Micro-BTS.

For DU software structure, Operating System which supports Real time Multitasking, CSM Driver and Control Message processing are necessary. The Packet which is received from Packet Router in Main Processor treats all messages and traffic data with call processing and Routing in Packet control task.

In the CAI Overhead control task, Overhead channel is set up and Sync channel message and Paging channel message are generated.

Interrupt Handler treats traffic data using Tx / Rx interrupt of various Interrupt related to CSM.

CSM Management receives configuration data and then initializes CSM.

After it makes resource and measurement/statistics data and sends them to the BMP.

In the forward link, the baseband interface executes common phase modulation /

demodulation (I, Q signal), A/D conversion, IF signal processing function.

In the reverse link, the baseband interface make AGC LOOP and keep input signal level of Channel card uniformly.

The basic software structure of DU is following.

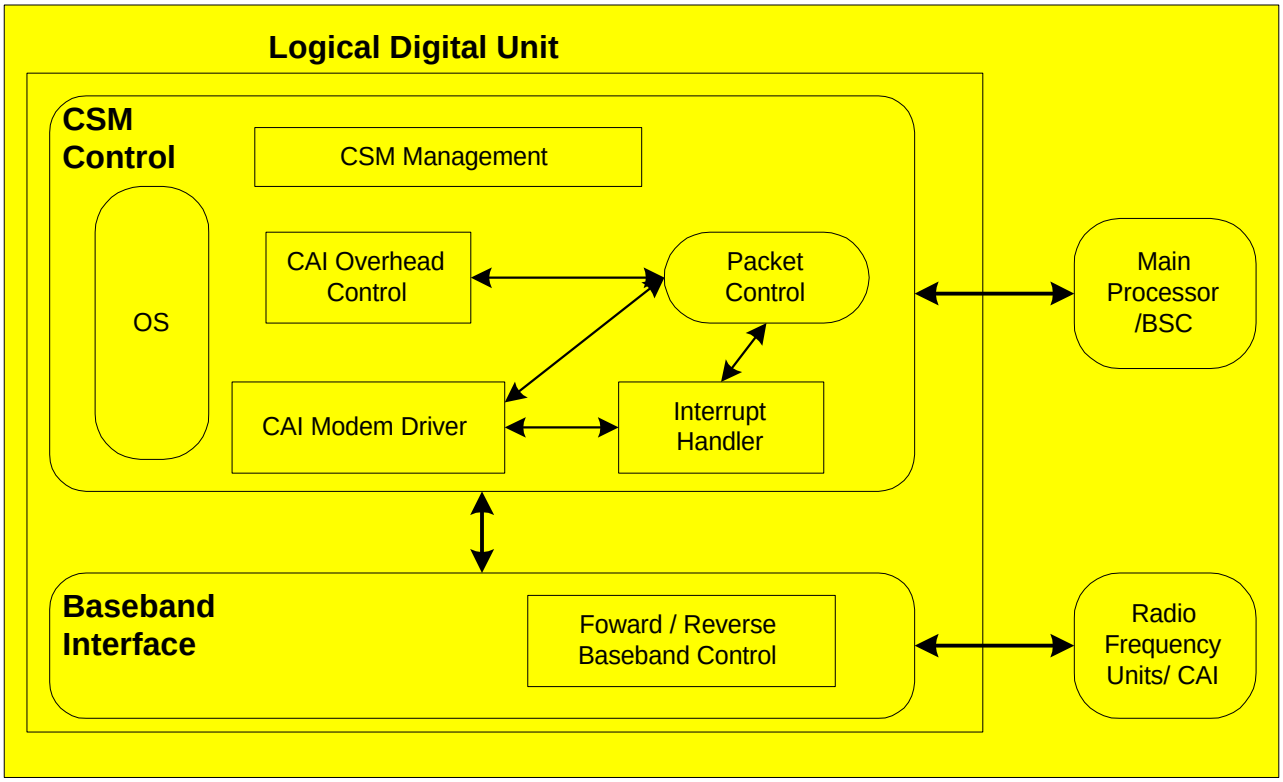

Figure 5.14 software structure of DU

5.5 Abbreviations

AGC	Automatic Gain Control
AIU	Antenna Interface Unit
BICA	Base band & IF Conversion Card Assembly
BMPA	BTS Main Processor Assembly
BSC	Base Station Controller
BSM	Base Station Manager
BTS	Base station Transceiver Subsystem
CDCA	CDMA Digital Channel card Assembly
COUP	Coupler
CSM	Cell Site Modem
D/A	Digital – Analog Conversion
DNCU	Down Conversion Unit
DPRAM	Dual Port RAM
DU	Digital Unit
EAIU	Extended AIU
EMI	Electro-Magnetic Interference
FA	Frequency Allocation
FLASH	Flash Memory
GPS	Global Positioning System
HDLC	High-level Data Link Controller
IF	Intermediate Frequency
LED	Light Emitting Diode
LNA	Low Noise Amplifier
LPA	Linear Power Amplifier
LPF	Low Pass Filter
MMC	Man-Machine Communication
MS	Mobile Station
MTBF	Mean Time Between Failure
PCS	Personal Communication System
PS	Personal Station

QPSK	Quadrature Phase Shift Keying
RSSI	Receive Signal Strength Indicator
RRU	Remote RF Unit
RF	Radio Frequency
STFU	Synchronized GPS Time & Frequency Unit
SYNU	Synthesizer Unit
TBD	To Be Determined
TCE	Traffic Channel Element
TOD	Time Of Day
TPTL	Transmit Power Tracking Loop
UPCU	Up Conversion Unit
XCVU	Transceiver Unit
XVBB	Transceiver Back Board