SS4041
Quick Start Guide

Start Here

Phone overview

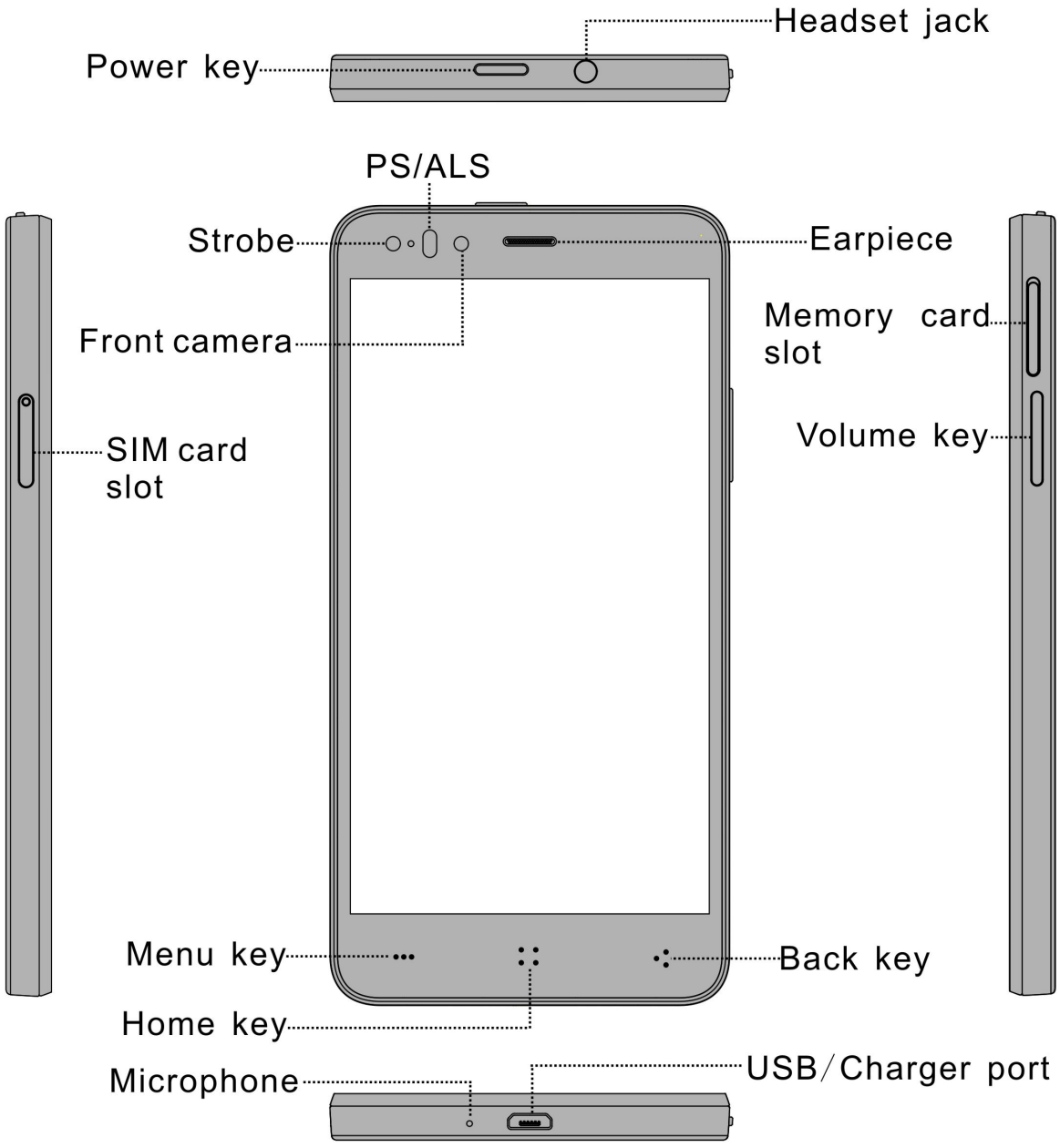

Getting started

To insert the SIM card and a microSD card please perform the steps shown in the following figures.

Note: SS4041 has been equipped with a built-in battery; battery cover could not be disassembled

1. Open the SIM card slot

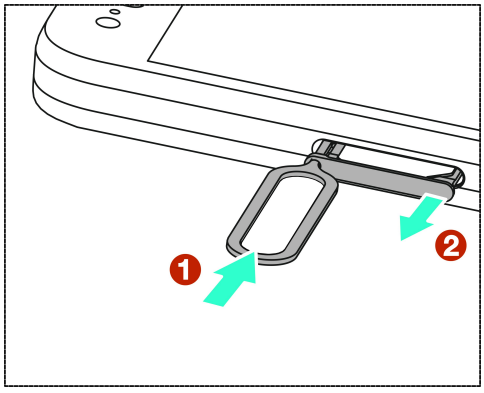

2. Install SIM card

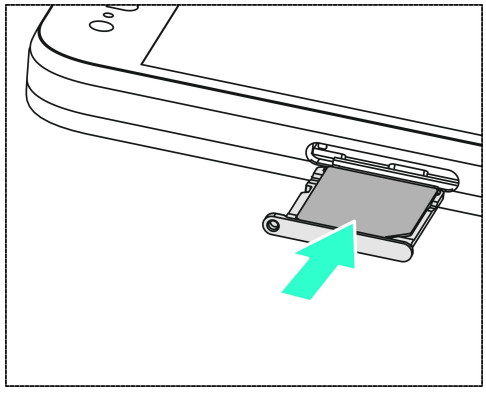

3. Open the memory card slot

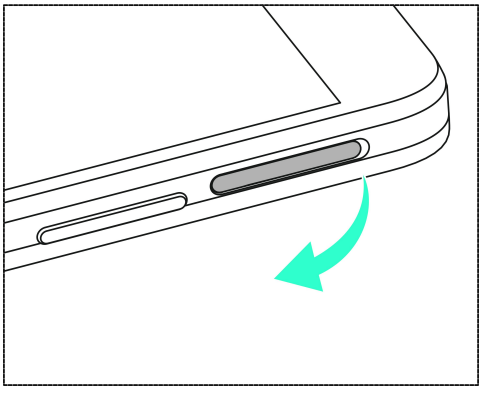

4. Install memory card

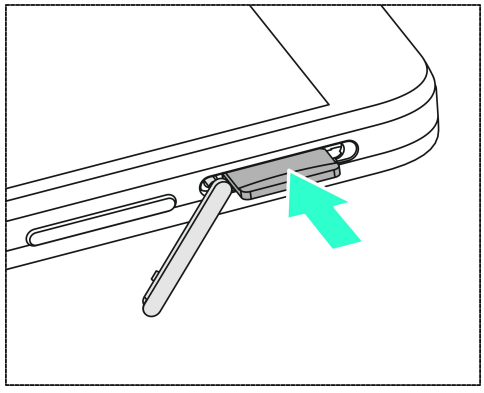

Buttons

Power key: To power off SS4041, press and hold power key for a few seconds, then tap the options to confirm. When SS4041 is on, press the power key once to activate or deactivate the screen.

Home key (): Touch the key to return to the home screen. In idle screen, touch and hold the key to view recently accessed features.

Menu key (): In standby mode, touch the key to set wallpaper, view settings, and manage apps. Touch it to view menu options.

Back key (): Touch to go back to the previous menu.

Screen

SS4041 features a 5.0" screen with 720*1280 Resolution. Which make your phone looks fascinating.

Screen lock

You can increase the security of your phone by selecting screen lock .Screen lock settings can be found under “Settings”>“Security”> “Screen lock”.

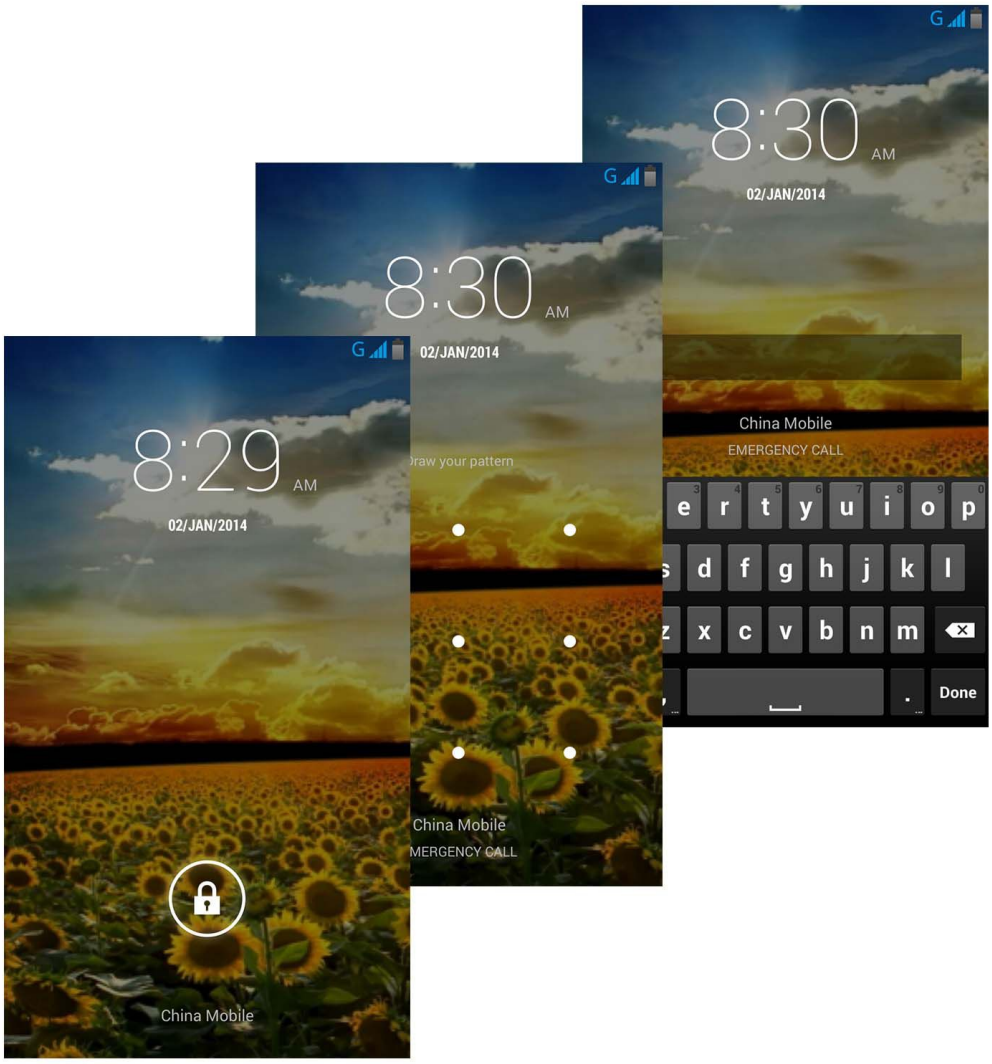

Customize home screen

In standby mode, touch and hold an empty area to add set wallpapers. You can also remove items from the home screen, move items, and add items to home screen to customize the home screen.

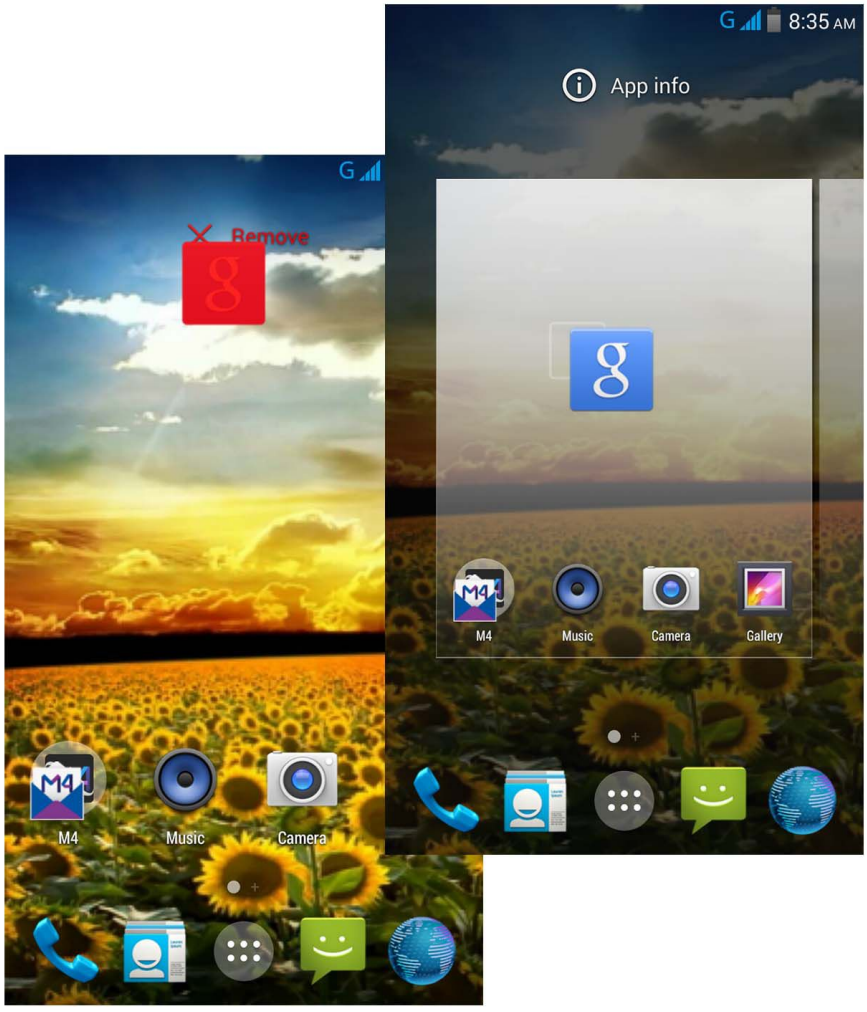

Camera

SS4041 is equipped with 5MP/13MP cameras and a camcorder, which are designed for you to share wonderful moments with friends and family.

Adjust focus, exposure, zoom in or zoom out, switch between cameras and switch between the functions by flipping the icon on the screen.

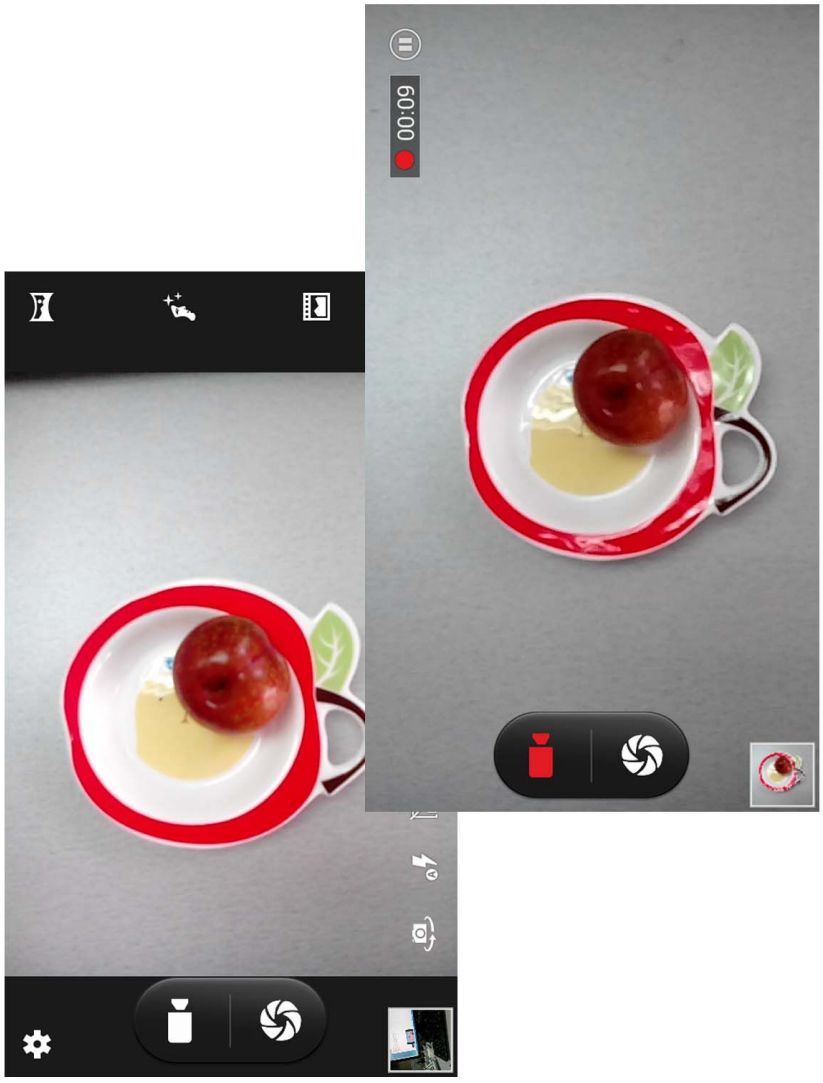

Internet

You can enjoy network by selecting 3G, WLAN, and GSM. Enjoy music, videos, apps and news anywhere and anytime as you like.

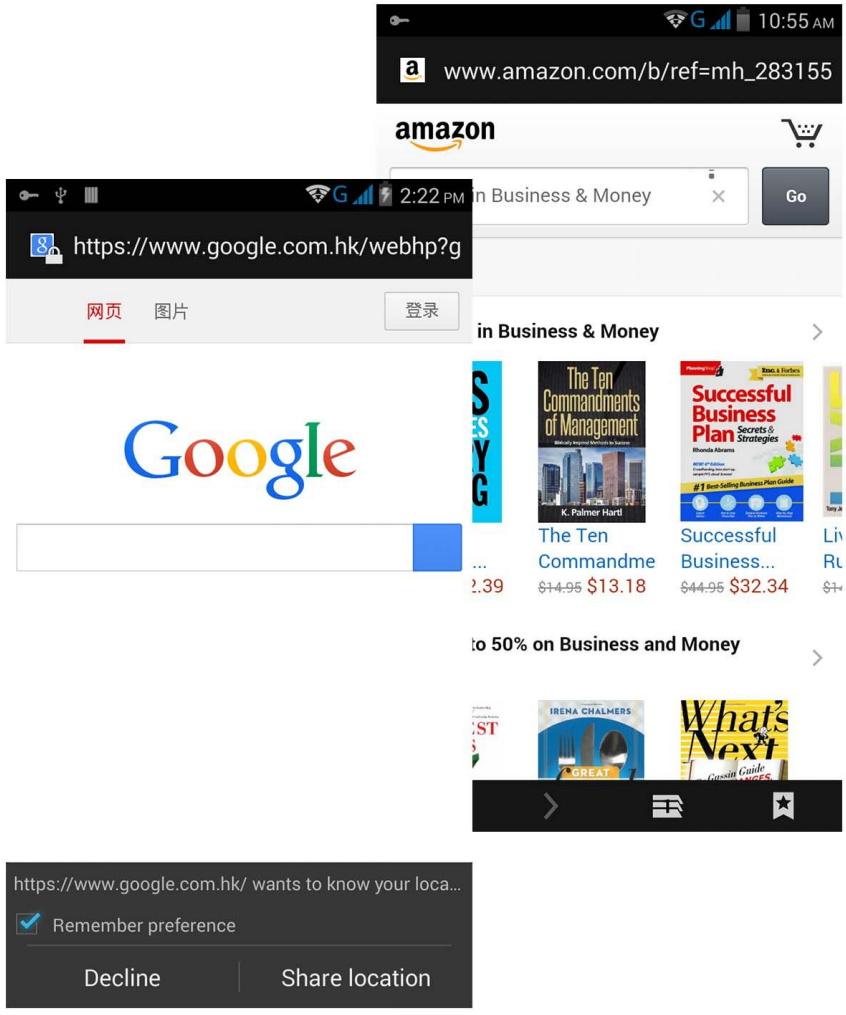

Make a call

You can make a call under the interface of Call log, contacts, favorites, message (which contains a phone number). In standby mode, press call key to make a call.

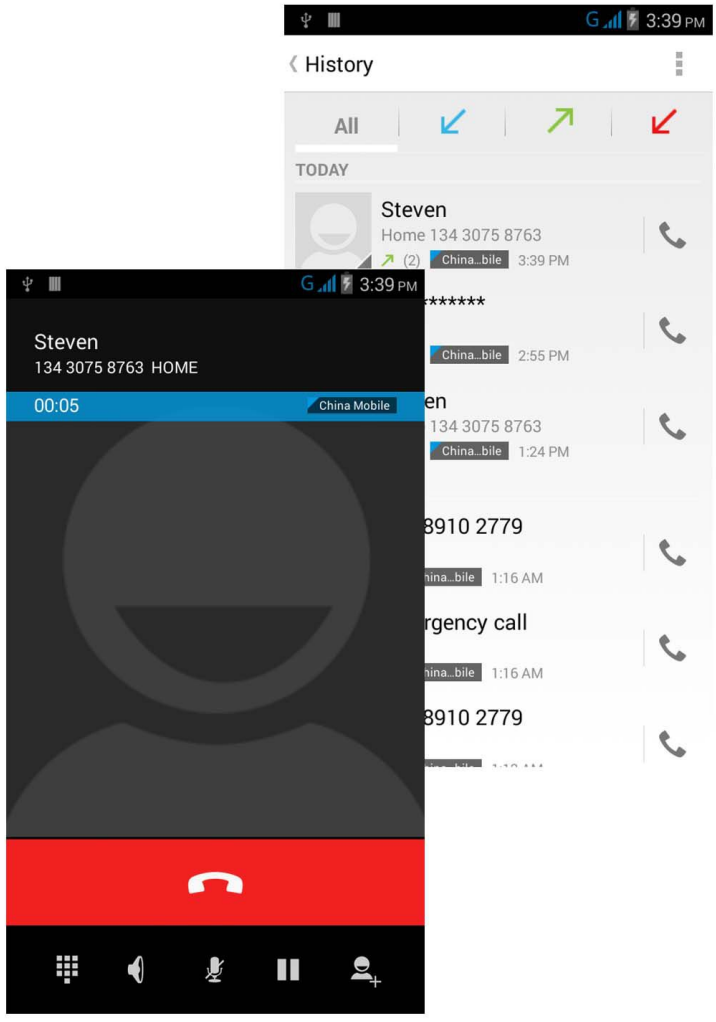

Messaging

Touch and hold the text box to select an input method. You can insert smiley, picture, audio or video files and send to multiple recipients.

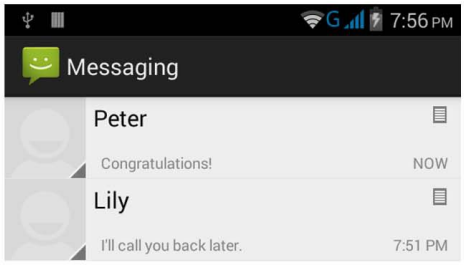

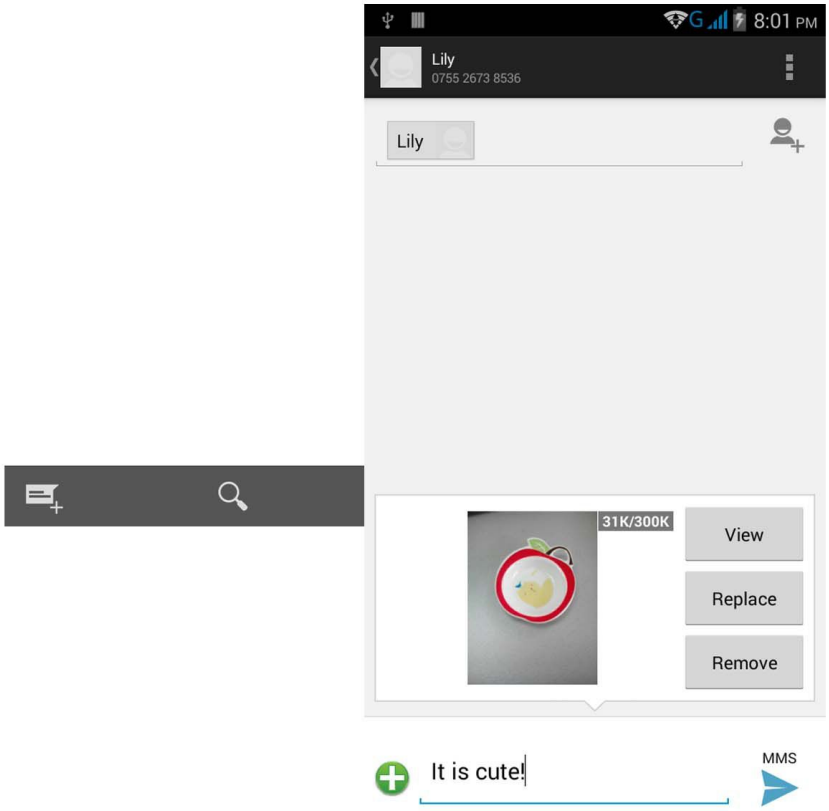

Email

The email app enables you to read, compose and send emails, and is configured to work with all the major email providers. SS4041 supports multiple account modes, and you won’t miss any email.

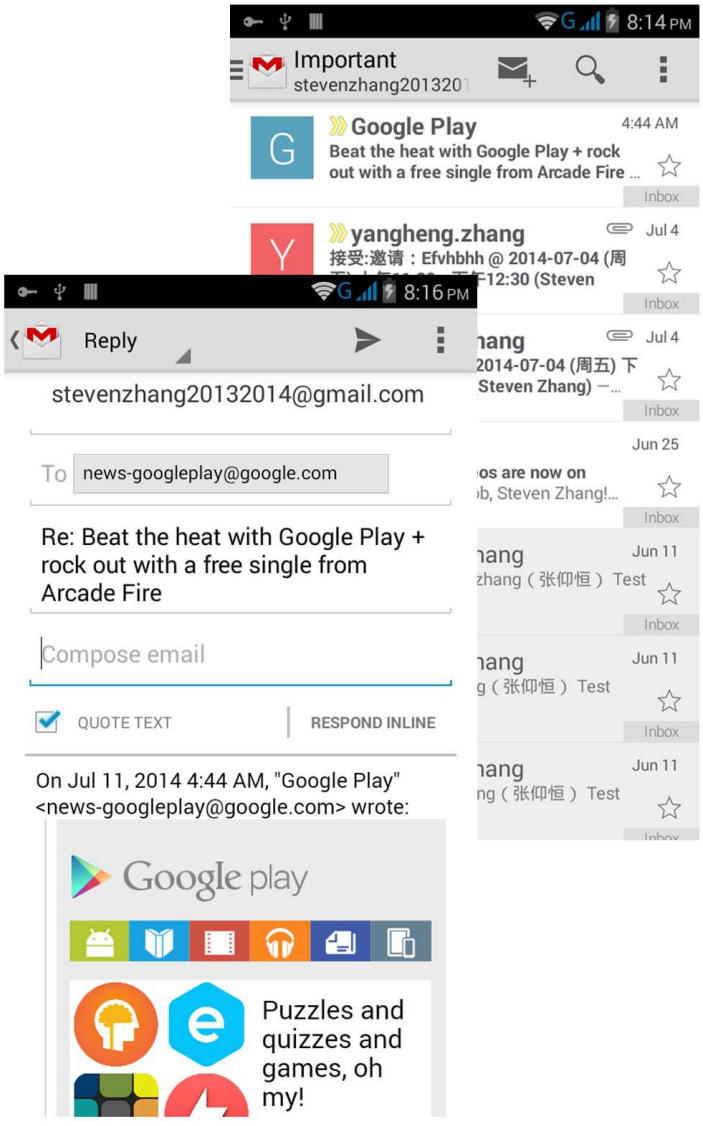

Music

SS4041 supports various music formats, different sound effects and 4 categorizing, i.e. Artists, Albums, Songs and Playlists.

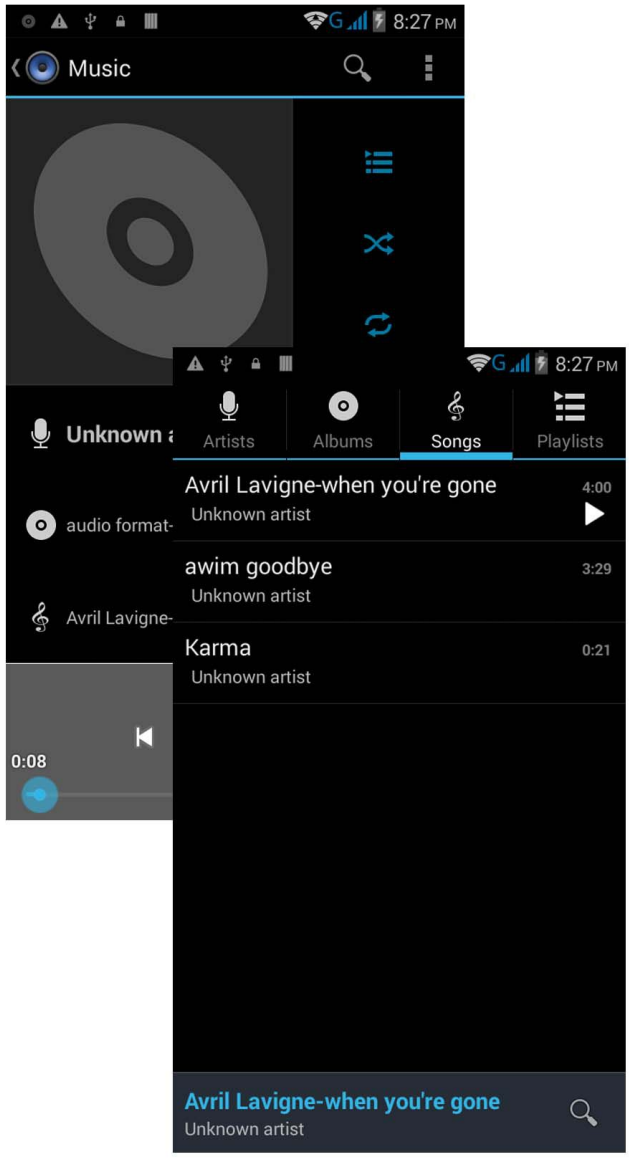

Videos

Enjoy a visual feast in a variety of video formats, please choose SS4041.

Photos

You will find it very easy to view all the photos. Flick right or left to move among images. Double-tap or pinch the photo to zoom. You can edit, share, print, and more.

Intelligent keyboard

SS4041 automatically corrects and suggests words as you type, and it also supports voice input.

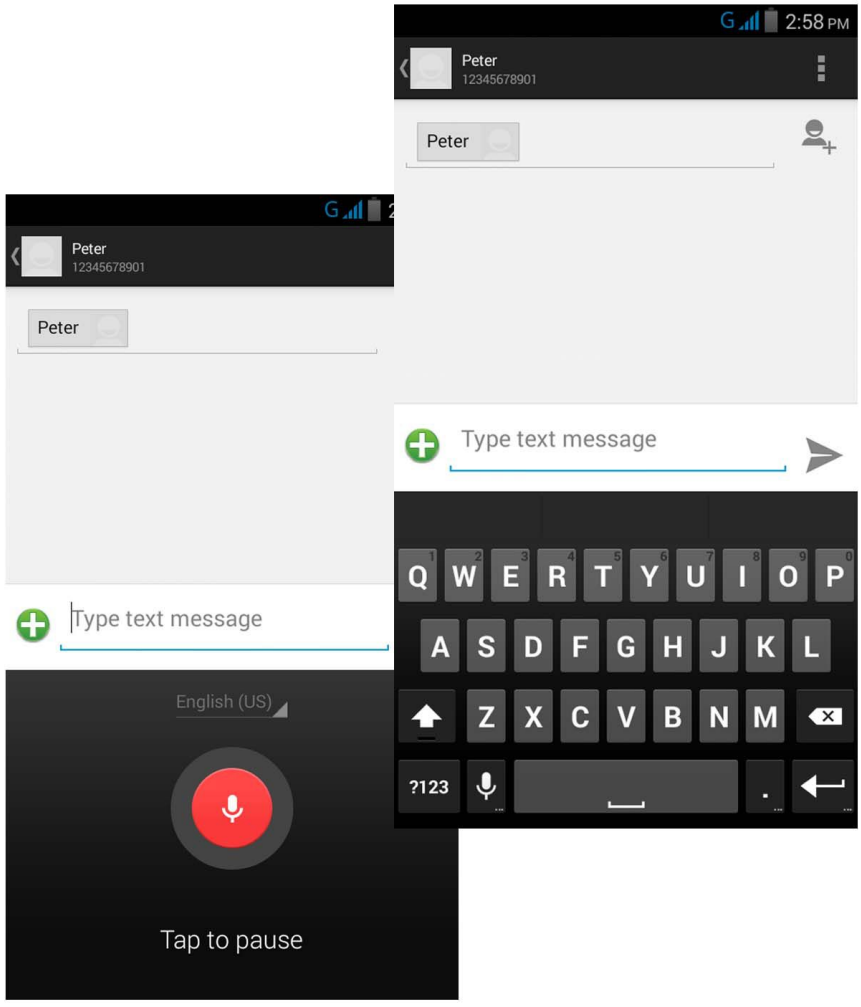

Cut, copy, and paste

Touch and hold text content to bring up the magnifying glass, and then slide your finger to move the insertion points. Then tap to cut, copy, or paste. It is very easy to copy text from web pages, email, or text messages.

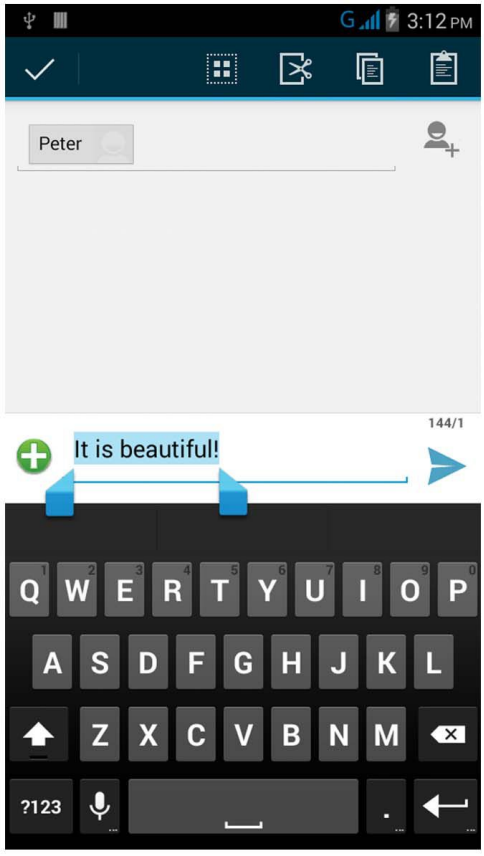

Map

You can view satellite images or street map with detailed route instructions just as you are walking in the street. The Map app can be used to locate yourself, view real-time traffic conditions, pedestrian, bus routes or car driving route instructions.

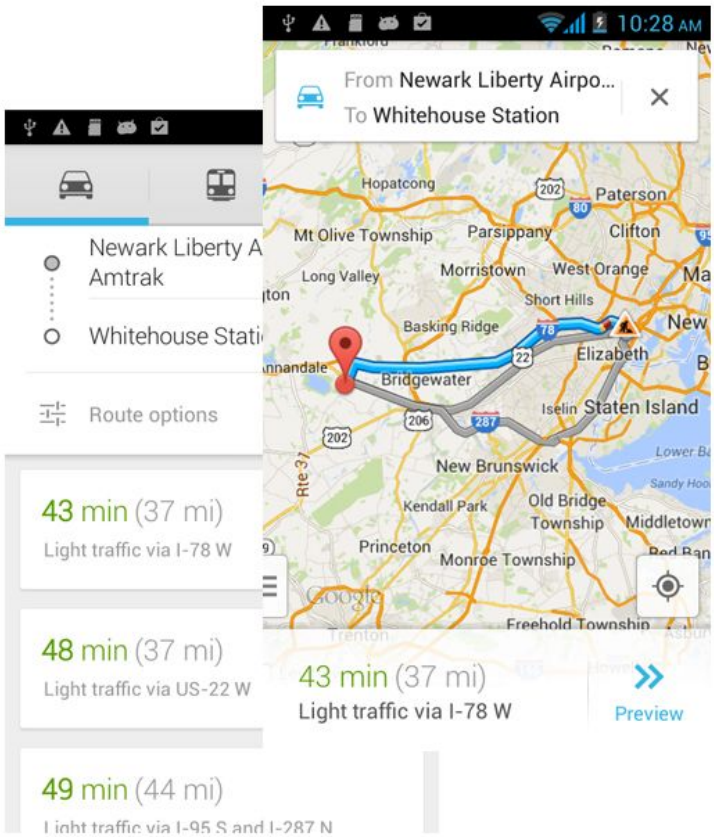

FCC Regulations:

This mobile phone complies with part 15 of the FCC Rules. Operation is subject to the following two conditions: (1) This device may not cause harmful interference, and (2) this device must accept any interference received, including interference that may cause undesired operation.

This mobile phone has been tested and found to comply with the limits for a Class B digital device, pursuant to Part 15 of the FCC Rules. These limits are designed to provide reasonable protection against harmful interference in a residential installation. This equipment generates uses and can radiated radio frequency energy and, if not installed and used in accordance with the instructions, may cause harmful interference to radio communications. However, there is no guarantee that interference will not occur in a particular installation If this equipment does cause harmful interference to radio or television reception, which can be determined by turning the equipment off and on, the user is encouraged to try to correct the interference by one or more of the following measures:

-Reorient or relocate the receiving antenna.

-Increase the separation between the equipment and receiver.

-Connect the equipment into an outlet on a circuit different from that to which the receiver is connected.

-Consult the dealer or an experienced radio/TV technician for help.

Changes or modifications not expressly approved by the party responsible for compliance could void the user‘s authority to operate

SAR Warning

This model phone meets the government’s requirements for exposure to radio waves.

This phone is designed and manufactured not to exceed the emission limits for exposure to radio frequency (RF) energy set by the Federal Communications Commission of the U.S. Government:

The exposure standard for wireless mobile phones employs a unit of measurement known as the Specific Absorption Rate, or SAR. The SAR limit set by the FCC is 1.6W/kg.

Tests for SAR are conducted using standard operating positions accepted by the FCC with the phone transmitting at its highest certified power level in all tested frequency bands. Although the SAR is determined at the highest certified power level, the actual SAR level of the phone while operating can be well below the maximum value. This is because the phone is designed to operate at multiple power levels so as to use only the poser required to reach the network. In general, the closer you are to a wireless base station antenna, the lower the power output.

The highest SAR value for the model phone as reported

to the FCC when tested for use at the ear is 0.59 W/kg and when worn on the body, as described in this user guide, is 1.229 W/kg (Body-worn measurements differ among phone models, depending upon available enhancements and FCC requirements).

While there may be differences between the SAR levels of various phones and at various positions, they all meet the government requirement.

The FCC has granted an Equipment Authorization for this model phone with all reported SAR levels evaluated as in compliance with the FCC RF exposure guidelines.

SAR information on this model phone is on file with the FCC and can be found under the Display Grant section of http://www.fcc.gov/oet/fccid after searching on

FCC ID: CLNSS4041

Indicate that Body SAR was tested at 1.0cm without any accessory.When using any body worn accessory , please help to make sure it as least 10mm clearance between phone and human body. The body worn accessory should not contain any metal.