FCC SAR Test Report

Report No.	:	**SA160805C22**
Applicant	:	**GoPro, Inc.**
Address	:	**3000 Clearview Way, San Mateo, CA94402, United States**
Product	:	**Remote Control**
FCC ID	:	**CNFKWBH1**
Brand	:	**GoPro**
Model No.	:	**KWBH1**
Standards	:	**FCC 47 CFR Part 2 (2.1093) / IEEE C95.1:1992 / IEEE Std 1528:2013** **KDB 865664 D01 v01r04 / KDB 865664 D02 v01r02** **KDB 248227 D01 v02r02 / KDB 447498 D01 v06**
Sample Received Date	:	**Aug. 11, 2016**
Date of Testing	:	**Sep. 08, 2016 ~ Sep. 20, 2016**
Lab Address	:	**No. 47-2, 14th Ling, Chia Pau Vil., Lin Kou Dist., New Taipei City, Taiwan, R.O.C.**
Test Location	:	**No. 19, Hwa Ya 2nd Rd, Wen Hwa Vil, Kwei Shan Dist., Taoyuan City 33383, Taiwan (R.O.C)**

CERTIFICATION: The above equipment have been tested by **Bureau Veritas Consumer Products Services (H.K.) Ltd., Taoyuan Branch – Lin Kou Laboratories**, and found compliance with the requirement of the above standards. The test record, data evaluation & Equipment Under Test (EUT) configurations represented herein are true and accurate accounts of the measurements of the sample's SAR characteristics under the conditions specified in this report. It should not be reproduced except in full, without the written approval of our laboratory. The client should not use it to claim product certification, approval, or endorsement by TAF or any government agencies.

Prepared By : Evonne Liu / Specialist

Approved By : Eli Hsu / Supervisor

This report is for your exclusive use. Any copying or replication of this report to or for any other person or entity, or use of our name or trademark, is permitted only with our prior written permission. This report sets forth our findings solely with respect to the test samples identified herein. The results set forth in this report are not indicative or representative of the quality or characteristics of the lot from which a test sample was taken or any similar or identical product unless specifically and expressly noted. Our report includes all of the tests requested by you and the results thereof based upon the information that you provided to us. You have 60 days from date of issuance of this report to notify us of any material error or omission caused by our negligence, provided, however, that such notice shall be in writing and shall specifically address the issue you wish to raise. A failure to raise such issue within the prescribed time shall constitute your unqualified acceptance of the completeness of this report, the tests conducted and the correctness of the report contents. Unless specific mention, the uncertainty of measurement has been explicitly taken into account to declare the compliance or non-compliance to the specification.

Table of Contents

Release Control Record **3**
1. Summary of Maximum SAR Value **4**
2. Description of Equipment Under Test **5**
3. SAR Measurement System **6**
3.1 Definition of Specific Absorption Rate (SAR) 6
3.2 SPEAG DASY System 6
3.2.1 Robot 7
3.2.2 Probes 8
3.2.3 Data Acquisition Electronics (DAE) 8
3.2.4 Phantoms 9
3.2.5 Device Holder 10
3.2.6 System Validation Dipoles 10
3.2.7 Tissue Simulating Liquids 11
3.3 SAR System Verification 14
3.4 SAR Measurement Procedure 15
3.4.1 Area & Zoom Scan Procedure 15
3.4.2 Volume Scan Procedure 15
3.4.3 Power Drift Monitoring 16
3.4.4 Spatial Peak SAR Evaluation 16
3.4.5 SAR Averaged Methods 16
4. SAR Measurement Evaluation **17**
4.1 EUT Configuration and Setting 17
4.2 EUT Testing Position 18
4.2.1 Simultaneous Transmission Possibilities 18
4.3 Tissue Verification 19
4.4 System Validation 19
4.5 System Verification 20
4.6 Maximum Output Power 21
4.6.1 Maximum Conducted Power 21
4.6.2 Measured Conducted Power Result 22
4.7 SAR Testing Results 23
4.7.1 SAR Test Reduction Considerations 23
4.7.2 SAR Results for Body Exposure Condition (Separation Distance is 1.0 cm Gap) 24
4.7.3 SAR Results for Extremity Exposure Condition (Separation Distance is 0 cm Gap) 24
4.7.4 SAR Measurement Variability 25
4.7.5 Simultaneous Multi-band Transmission Evaluation 25
5. Calibration of Test Equipment **27**
6. Measurement Uncertainty **28**
7. Information on the Testing Laboratories **30**

Appendix A. SAR Plots of System Verification
Appendix B. SAR Plots of SAR Measurement
Appendix C. Calibration Certificate for Probe and Dipole
Appendix D. Photographs of EUT and Setup

Release Control Record

Report No.	Reason for Change	Date Issued
SA160805C22	Initial release	Sep. 21, 2016

1. Summary of Maximum SAR Value

Equipment Class	Mode	Highest Reported Body SAR_{1g} (1.0 cm Gap) (W/kg)	Highest Reported Extremity SAR_{10g} (0 cm Gap) (W/kg)
DTS	2.4G WLAN	0.31	0.42
NII	5.3G WLAN	0.17	0.32
	5.6G WLAN	0.10	0.17
	5.8G WLAN	0.14	0.18
Highest Simultaneous Transmission SAR		Face (W/kg)	Extremity (W/kg)
DTS(Sidecar Ant) + DTS(Hi-Power Ant)		0.41	1.35
NII(Sidecar Ant) + DTS(Hi-Power Ant)		0.27	1.35

Note:

1. The SAR limit **(Head & Body: SAR_{1g} 1.6 W/kg, Extremity: SAR_{10g} 4.0 W/kg)** for general population / uncontrolled exposure is specified in FCC 47 CFR part 2 (2.1093) and ANSI/IEEE C95.1-1992.

2. Description of Equipment Under Test

EUT Type	Remote Control
FCC ID	CNFKWBH1
Brand Name	GoPro
Model Name	KWBH1
Tx Frequency Bands (Unit: MHz)	**Sidecar Antenna:** WLAN : 2412 ~ 2462, 5180 ~ 5240, 5260 ~ 5320, 5500 ~ 5700, 5745 ~ 5825 **Hi-power Antenna:** WLAN : 2412 ~ 2462
Uplink Modulations	802.11b : DSSS 802.11a/g/n : OFDM
Maximum Tune-up Conducted Power (Unit: dBm)	Please refer to section 4.6.1 of this report.
Antenna Type	Patch Antenna/ PCB printed Antenna
EUT Stage	ENGINEERING SAMPLE

Note:

1. The above EUT information is declared by manufacturer and for more detailed features description please refers to the manufacturer's specifications or User's Manual.
2. The Hi-power Antenna of the duty cycle during the SAR testing must be within 25%.
3. The EUT Configurations are listed as below.

Brand	Model	SKU	Difference
GoPro	KWBH1	SKU#A	Main test SKU
		SKU#B	Antenna circuits and software of the RF portion of SKU# B is identical with SKU# A. The differences are merely found in the LCM shielding changed to Aluminum material also slightly modify the outline of grounding tab which have no effect on its RF characteristics, they are just for marketing differentiate purpose. So, we chose SKU# A as representative to do the final test. And we do the spot check test for SKU#B.

List of Accessory:

Battery	**Brand Name**	GoPro
	Model Name	601-11232-000
	Power Rating	3.6Vdc, 4150mAh, 15Wh
	Type	Li-ion

3. SAR Measurement System

3.1 Definition of Specific Absorption Rate (SAR)

SAR is related to the rate at which energy is absorbed per unit mass in an object exposed to a radio field. The SAR distribution in a biological body is complicated and is usually carried out by experimental techniques or numerical modeling. The standard recommends limits for two tiers of groups, occupational/controlled and general population/uncontrolled, based on a person's awareness and ability to exercise control over his or her exposure. In general, occupational/controlled exposure limits are higher than the limits for general population/uncontrolled.

The SAR definition is the time derivative (rate) of the incremental energy (dW) absorbed by (dissipated in) an incremental mass (dm) contained in a volume element (dv) of a given density (ρ). The equation description is as below:

$$\mathbf{SAR} = \frac{\mathbf{d}}{\mathbf{dt}}\left(\frac{\mathbf{dW}}{\mathbf{dm}}\right) = \frac{\mathbf{d}}{\mathbf{dt}}\left(\frac{\mathbf{dW}}{\boldsymbol{\rho}\mathbf{dv}}\right)$$

SAR is expressed in units of Watts per kilogram (W/kg)

SAR measurement can be related to the electrical field in the tissue by

$$\mathbf{SAR} = \frac{\boldsymbol{\sigma}|\mathbf{E}|^2}{\boldsymbol{\rho}}$$

Where: σ is the conductivity of the tissue, ρ is the mass density of the tissue and E is the RMS electrical field strength.

3.2 SPEAG DASY System

DASY system consists of high precision robot, probe alignment sensor, phantom, robot controller, controlled measurement server and near-field probe. The robot includes six axes that can move to the precision position of the DASY4/5 software defined. The DASY software can define the area that is detected by the probe. The robot is connected to controlled box. Controlled measurement server is connected to the controlled robot box. The DAE includes amplifier, signal multiplexing, AD converter, offset measurement and surface detection. It is connected to the Electro-optical coupler (ECO). The ECO performs the conversion form the optical into digital electric signal of the DAE and transfers data to the PC.

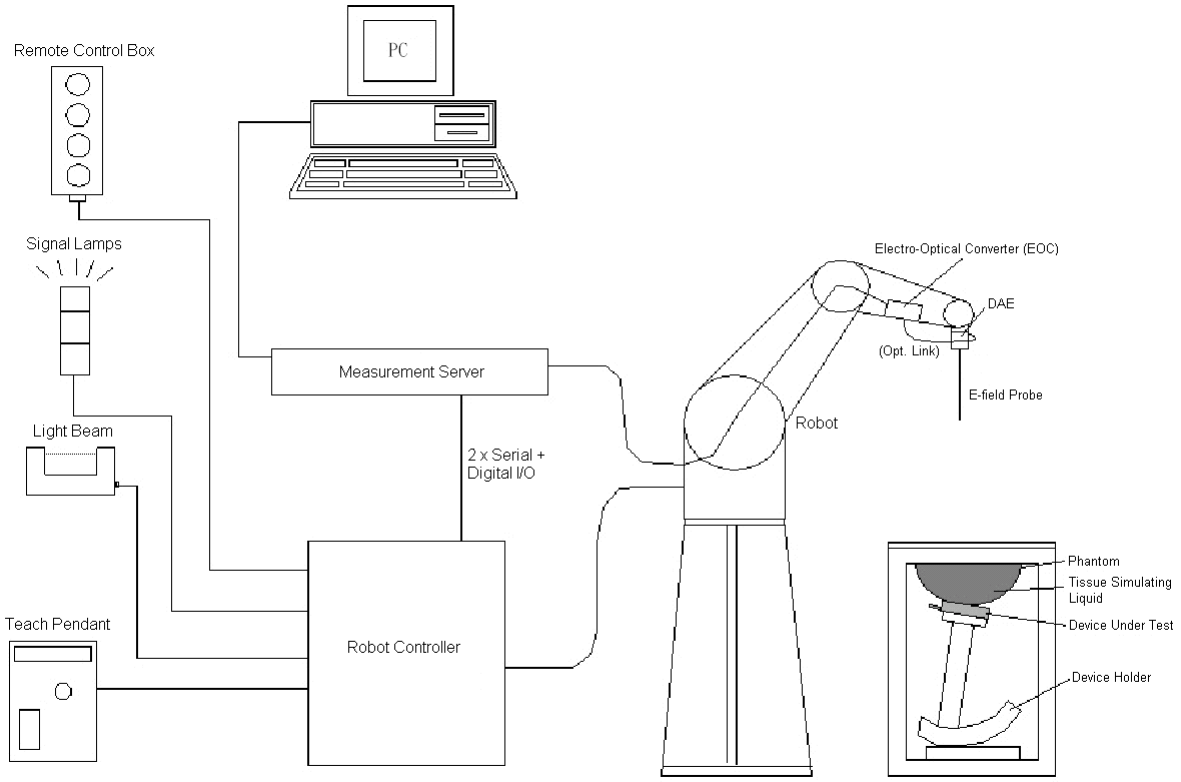

Fig-3.1 SPEAG DASY52 System Setup

3.2.1 Robot

The SPEAG DASY52 systems use the high precision robots from Stäubli SA (France). For the 6-axis controller system, the robot controller version (CS8c) from Stäubli is used. The Stäubli robot series have many features that are important for our application:

- High precision (repeatability ±0.035 mm)
- High reliability (industrial design)
- Jerk-free straight movements
- Low ELF interference (the closed metallic construction shields against motor control fields)

Fig-3.2 SPEAG DASY52 System

3.2.2 Probes

The SAR measurement is conducted with the dosimetric probe. The probe is specially designed and calibrated for use in liquid with high permittivity. The dosimetric probe has special calibration in liquid at different frequency.

Model	EX3DV4	
Construction	Symmetrical design with triangular core. Built-in shielding against static charges. PEEK enclosure material (resistant to organic solvents, e.g., DGBE).	
Frequency	10 MHz to 6 GHz Linearity: ± 0.2 dB	
Directivity	± 0.3 dB in HSL (rotation around probe axis) ± 0.5 dB in tissue material (rotation normal to probe axis)	
Dynamic Range	10 µW/g to 100 mW/g Linearity: ± 0.2 dB (noise: typically < 1 µW/g)	
Dimensions	Overall length: 337 mm (Tip: 20 mm) Tip diameter: 2.5 mm (Body: 12 mm) Typical distance from probe tip to dipole centers: 1 mm	

Model	ES3DV3	
Construction	Symmetrical design with triangular core. Interleaved sensors. Built-in shielding against static charges. PEEK enclosure material (resistant to organic solvents, e.g., DGBE).	
Frequency	10 MHz to 4 GHz Linearity: ± 0.2 dB	
Directivity	± 0.2 dB in HSL (rotation around probe axis) ± 0.3 dB in tissue material (rotation normal to probe axis)	
Dynamic Range	5 µW/g to 100 mW/g Linearity: ± 0.2 dB	
Dimensions	Overall length: 337 mm (Tip: 20 mm) Tip diameter: 3.9 mm (Body: 12 mm) Distance from probe tip to dipole centers: 2.0 mm	

3.2.3 Data Acquisition Electronics (DAE)

Model	DAE3, DAE4	
Construction	Signal amplifier, multiplexer, A/D converter and control logic. Serial optical link for communication with DASY embedded system (fully remote controlled). Two step probe touch detector for mechanical surface detection and emergency robot stop.	
Measurement Range	-100 to +300 mV (16 bit resolution and two range settings: 4mV, 400mV)	
Input Offset Voltage	< 5µV (with auto zero)	
Input Bias Current	< 50 fA	
Dimensions	60 x 60 x 68 mm	

3.2.4 Phantoms

Model	Twin SAM	
Construction	The shell corresponds to the specifications of the Specific Anthropomorphic Mannequin (SAM) phantom defined in IEEE 1528 and IEC 62209-1. It enables the dosimetric evaluation of left and right hand phone usage as well as body mounted usage at the flat phantom region. A cover prevents evaporation of the liquid. Reference markings on the phantom allow the complete setup of all predefined phantom positions and measurement grids by teaching three points with the robot.	
Material	Vinylester, glass fiber reinforced (VE-GF)	
Shell Thickness	2 ± 0.2 mm (6 ± 0.2 mm at ear point)	
Dimensions	Length: 1000 mm Width: 500 mm Height: adjustable feet	
Filling Volume	approx. 25 liters	

Model	ELI	
Construction	Phantom for compliance testing of handheld and body-mounted wireless devices in the frequency range of 30 MHz to 6 GHz. ELI is fully compatible with the IEC 62209-2 standard and all known tissue simulating liquids. ELI has been optimized regarding its performance and can be integrated into our standard phantom tables. A cover prevents evaporation of the liquid. Reference markings on the phantom allow installation of the complete setup, including all predefined phantom positions and measurement grids, by teaching three points. The phantom is compatible with all SPEAG dosimetric probes and dipoles.	
Material	Vinylester, glass fiber reinforced (VE-GF)	
Shell Thickness	2.0 ± 0.2 mm (bottom plate)	
Dimensions	Major axis: 600 mm Minor axis: 400 mm	
Filling Volume	approx. 30 liters	

3.2.5 Device Holder

Model	Mounting Device	
Construction	In combination with the Twin SAM Phantom or ELI4, the Mounting Device enables the rotation of the mounted transmitter device in spherical coordinates. Rotation point is the ear opening point. Transmitter devices can be easily and accurately positioned according to IEC, IEEE, FCC or other specifications. The device holder can be locked for positioning at different phantom sections (left head, right head, flat).	
Material	POM	

Model	Laptop Extensions Kit	
Construction	Simple but effective and easy-to-use extension for Mounting Device that facilitates the testing of larger devices according to IEC 62209-2 (e.g., laptops, cameras, etc.). It is lightweight and fits easily on the upper part of the Mounting Device in place of the phone positioner.	
Material	POM, Acrylic glass, Foam	

3.2.6 System Validation Dipoles

Model	D-Serial	
Construction	Symmetrical dipole with l/4 balun. Enables measurement of feed point impedance with NWA. Matched for use near flat phantoms filled with tissue simulating solutions.	
Frequency	750 MHz to 5800 MHz	
Return Loss	> 20 dB	
Power Capability	> 100 W (f < 1GHz), > 40 W (f > 1GHz)	

3.2.7 Tissue Simulating Liquids

For SAR measurement of the field distribution inside the phantom, the phantom must be filled with homogeneous tissue simulating liquid to a depth of at least 15 cm. For head SAR testing, the liquid height from the ear reference point (ERP) of the phantom to the liquid top surface is larger than 15 cm. For body SAR testing, the liquid height from the center of the flat phantom to the liquid top surface is larger than 15 cm. The nominal dielectric values of the tissue simulating liquids in the phantom and the tolerance of 5% are listed in Table-3.1.

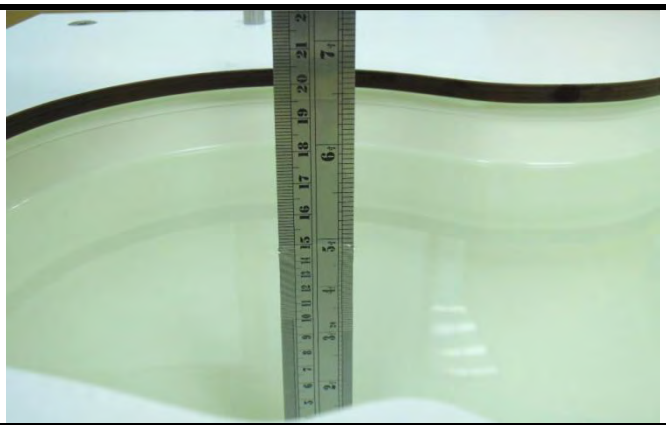	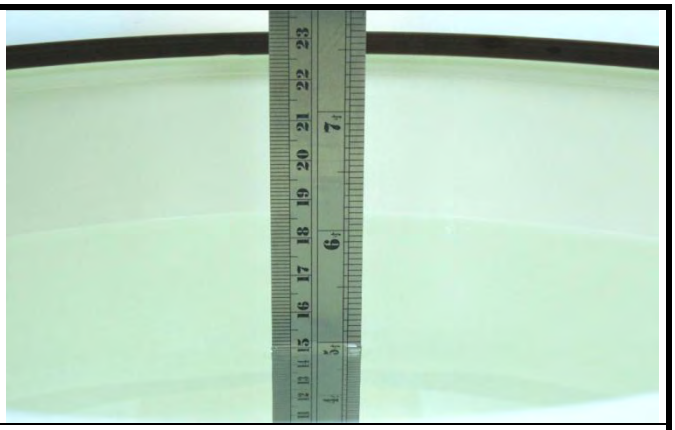
Photo of Liquid Height for Head Position	**Photo of Liquid Height for Body Position**

The dielectric properties of the head tissue simulating liquids are defined in IEEE 1528, and KDB 865664 D01 Appendix A. For the body tissue simulating liquids, the dielectric properties are defined in KDB 865664 D01 Appendix A. The dielectric properties of the tissue simulating liquids were verified prior to the SAR evaluation using a dielectric assessment kit and a network analyzer.

Table-3.1 Targets of Tissue Simulating Liquid

Frequency (MHz)	Target Permittivity	Range of ±5%	Target Conductivity	Range of ±5%
For Head				
750	41.9	39.8 ~ 44.0	0.89	0.85 ~ 0.93
835	41.5	39.4 ~ 43.6	0.90	0.86 ~ 0.95
900	41.5	39.4 ~ 43.6	0.97	0.92 ~ 1.02
1450	40.5	38.5 ~ 42.5	1.20	1.14 ~ 1.26
1640	40.3	38.3 ~ 42.3	1.29	1.23 ~ 1.35
1750	40.1	38.1 ~ 42.1	1.37	1.30 ~ 1.44
1800	40.0	38.0 ~ 42.0	1.40	1.33 ~ 1.47
1900	40.0	38.0 ~ 42.0	1.40	1.33 ~ 1.47
2000	40.0	38.0 ~ 42.0	1.40	1.33 ~ 1.47
2300	39.5	37.5 ~ 41.5	1.67	1.59 ~ 1.75
2450	39.2	37.2 ~ 41.2	1.80	1.71 ~ 1.89
2600	39.0	37.1 ~ 41.0	1.96	1.86 ~ 2.06
3500	37.9	36.0 ~ 39.8	2.91	2.76 ~ 3.06
5200	36.0	34.2 ~ 37.8	4.66	4.43 ~ 4.89
5300	35.9	34.1 ~ 37.7	4.76	4.52 ~ 5.00
5500	35.6	33.8 ~ 37.4	4.96	4.71 ~ 5.21
5600	35.5	33.7 ~ 37.3	5.07	4.82 ~ 5.32
5800	35.3	33.5 ~ 37.1	5.27	5.01 ~ 5.53
For Body				
750	55.5	52.7 ~ 58.3	0.96	0.91 ~ 1.01
835	55.2	52.4 ~ 58.0	0.97	0.92 ~ 1.02
900	55.0	52.3 ~ 57.8	1.05	1.00 ~ 1.10
1450	54.0	51.3 ~ 56.7	1.30	1.24 ~ 1.37
1640	53.8	51.1 ~ 56.5	1.40	1.33 ~ 1.47
1750	53.4	50.7 ~ 56.1	1.49	1.42 ~ 1.56
1800	53.3	50.6 ~ 56.0	1.52	1.44 ~ 1.60
1900	53.3	50.6 ~ 56.0	1.52	1.44 ~ 1.60
2000	53.3	50.6 ~ 56.0	1.52	1.44 ~ 1.60
2300	52.9	50.3 ~ 55.5	1.81	1.72 ~ 1.90
2450	52.7	50.1 ~ 55.3	1.95	1.85 ~ 2.05
2600	52.5	49.9 ~ 55.1	2.16	2.05 ~ 2.27
3500	51.3	48.7 ~ 53.9	3.31	3.14 ~ 3.48
5200	49.0	46.6 ~ 51.5	5.30	5.04 ~ 5.57
5300	48.9	46.5 ~ 51.3	5.42	5.15 ~ 5.69
5500	48.6	46.2 ~ 51.0	5.65	5.37 ~ 5.93
5600	48.5	46.1 ~ 50.9	5.77	5.48 ~ 6.06
5800	48.2	45.8 ~ 50.6	6.00	5.70 ~ 6.30

The following table gives the recipes for tissue simulating liquids.

Table-3.2 Recipes of Tissue Simulating Liquid

Tissue Type	Bactericide	DGBE	HEC	NaCl	Sucrose	Triton X-100	Water	Diethylene Glycol Mono-hexylether
H750	0.2	-	0.2	1.5	56.0	-	42.1	-
H835	0.2	-	0.2	1.5	57.0	-	41.1	-
H900	0.2	-	0.2	1.4	58.0	-	40.2	-
H1450	-	43.3	-	0.6	-	-	56.1	-
H1640	-	45.8	-	0.5	-	-	53.7	-
H1750	-	47.0	-	0.4	-	-	52.6	-
H1800	-	44.5	-	0.3	-	-	55.2	-
H1900	-	44.5	-	0.2	-	-	55.3	-
H2000	-	44.5	-	0.1	-	-	55.4	-
H2300	-	44.9	-	0.1	-	-	55.0	-
H2450	-	45.0	-	0.1	-	-	54.9	-
H2600	-	45.1	-	0.1	-	-	54.8	-
H3500	-	8.0	-	0.2	-	20.0	71.8	-
H5G	-	-	-	-	-	17.2	65.5	17.3
B750	0.2	-	0.2	0.8	48.8	-	50.0	-
B835	0.2	-	0.2	0.9	48.5	-	50.2	-
B900	0.2	-	0.2	0.9	48.2	-	50.5	-
B1450	-	34.0	-	0.3	-	-	65.7	-
B1640	-	32.5	-	0.3	-	-	67.2	-
B1750	-	31.0	-	0.2	-	-	68.8	-
B1800	-	29.5	-	0.4	-	-	70.1	-
B1900	-	29.5	-	0.3	-	-	70.2	-
B2000	-	30.0	-	0.2	-	-	69.8	-
B2300	-	31.0	-	0.1	-	-	68.9	-
B2450	-	31.4	-	0.1	-	-	68.5	-
B2600	-	31.8	-	0.1	-	-	68.1	-
B3500	-	28.8	-	0.1	-	-	71.1	-
B5G	-	-	-	-	-	10.7	78.6	10.7

3.3 SAR System Verification

The system check verifies that the system operates within its specifications. It is performed daily or before every SAR measurement. The system check uses normal SAR measurements in the flat section of the phantom with a matched dipole at a specified distance. The system verification setup is shown as below.

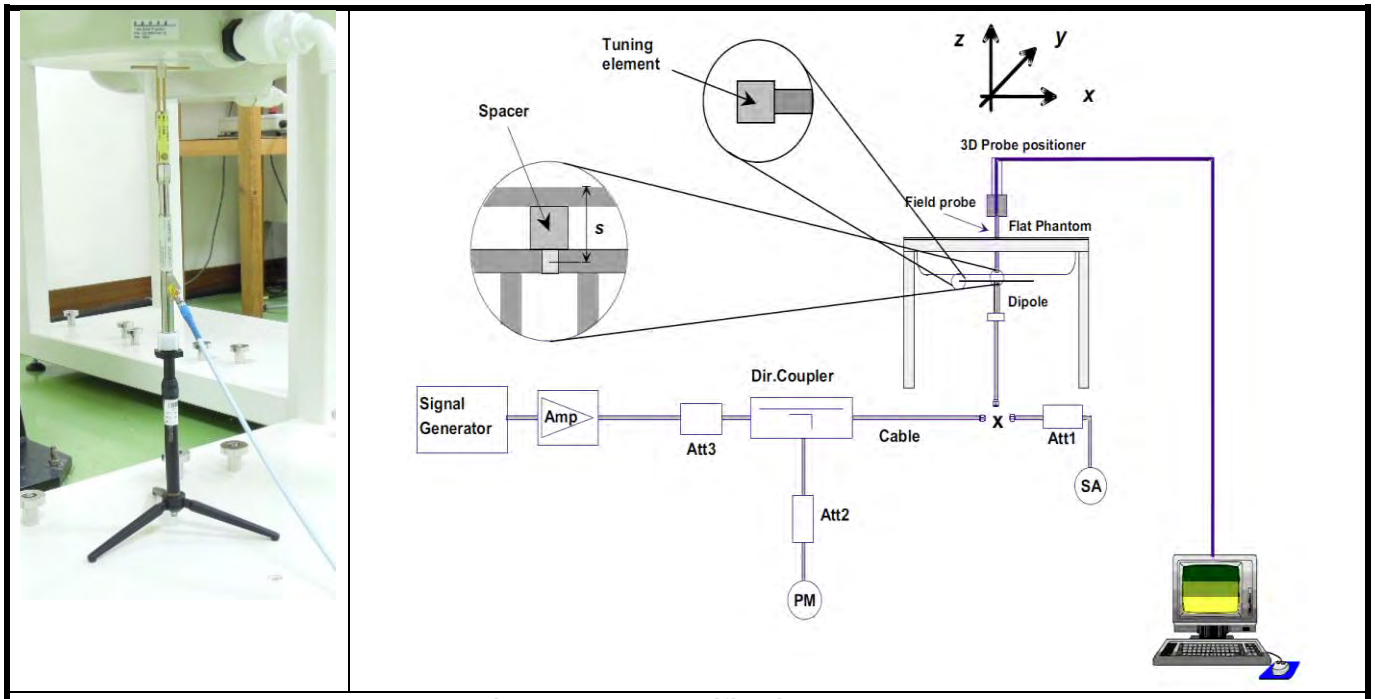

Fig-3.3 System Verification Setup

The validation dipole is placed beneath the flat phantom with the specific spacer in place. The distance spacer is touch the phantom surface with a light pressure at the reference marking and be oriented parallel to the long side of the phantom. The spectrum analyzer measures the forward power at the location of the system check dipole connector. The signal generator is adjusted for the desired forward power (250 mW is used for 700 MHz to 3 GHz, 100 mW is used for 3.5 GHz to 6 GHz) at the dipole connector and the power meter is read at that level. After connecting the cable to the dipole, the signal generator is readjusted for the same reading at power meter.

After system check testing, the SAR result will be normalized to 1W forward input power and compared with the reference SAR value derived from validation dipole certificate report. The deviation of system check should be within 10 %.

3.4 SAR Measurement Procedure

According to the SAR test standard, the recommended procedure for assessing the peak spatial-average SAR value consists of the following steps:

(a) Power reference measurement
(b) Area scan
(c) Zoom scan
(d) Power drift measurement

The SAR measurement procedures for each of test conditions are as follows:

(a) Make EUT to transmit maximum output power
(b) Measure conducted output power through RF cable
(c) Place the EUT in the specific position of phantom
(d) Perform SAR testing steps on the DASY system
(e) Record the SAR value

3.4.1 Area & Zoom Scan Procedure

First Area Scan is used to locate the approximate location(s) of the local peak SAR value(s). The measurement grid within an Area Scan is defined by the grid extent, grid step size and grid offset. Next, in order to determine the EM field distribution in a three-dimensional spatial extension, Zoom Scan is required. The Zoom Scan is performed around the highest E-field value to determine the averaged SAR-distribution over 10 g. According to KDB 865664 D01, the resolution for Area and Zoom scan is specified in the table below.

Items	<= 2 GHz	2-3 GHz	3-4 GHz	4-5 GHz	5-6 GHz
Area Scan (Δx, Δy)	<= 15 mm	<= 12 mm	<= 12 mm	<= 10 mm	<= 10 mm
Zoom Scan (Δx, Δy)	<= 8 mm	<= 5 mm	<= 5 mm	<= 4 mm	<= 4 mm
Zoom Scan (Δz)	<= 5 mm	<= 5 mm	<= 4 mm	<= 3 mm	<= 2 mm
Zoom Scan Volume	>= 30 mm	>= 30 mm	>= 28 mm	>= 25 mm	>= 22 mm

Note:

When zoom scan is required and report SAR is <= 1.4 W/kg, the zoom scan resolution of Δx / Δy (2-3GHz: <= 8 mm, 3-4GHz: <= 7 mm, 4-6GHz: <= 5 mm) may be applied.

3.4.2 Volume Scan Procedure

The volume scan is used for assess overlapping SAR distributions for antennas transmitting in different frequency bands. It is equivalent to an oversized zoom scan used in standalone measurements. The measurement volume will be used to enclose all the simultaneous transmitting antennas. For antennas transmitting simultaneously in different frequency bands, the volume scan is measured separately in each frequency band. In order to sum correctly to compute the 1g aggregate SAR, the EUT remain in the same test position for all measurements and all volume scan use the same spatial resolution and grid spacing. When all volume scan were completed, the software, SEMCAD postprocessor can combine and subsequently superpose these measurement data to calculating the multiband SAR.

3.4.3 Power Drift Monitoring

All SAR testing is under the EUT install full charged battery and transmit maximum output power. In DASY measurement software, the power reference measurement and power drift measurement procedures are used for monitoring the power drift of EUT during SAR test. Both these procedures measure the field at a specified reference position before and after the SAR testing. The software will calculate the field difference in dB. If the power drift more than 5%, the SAR will be retested.

3.4.4 Spatial Peak SAR Evaluation

The procedure for spatial peak SAR evaluation has been implemented according to the test standard. It can be conducted for 1g and 10g, as well as for user-specific masses. The DASY software includes all numerical procedures necessary to evaluate the spatial peak SAR value.

The base for the evaluation is a "cube" measurement. The measured volume must include the 1g and 10g cubes with the highest averaged SAR values. For that purpose, the center of the measured volume is aligned to the interpolated peak SAR value of a previously performed area scan.

The entire evaluation of the spatial peak values is performed within the post-processing engine (SEMCAD). The system always gives the maximum values for the 1g and 10g cubes. The algorithm to find the cube with highest averaged SAR is divided into the following stages:

(a) Extraction of the measured data (grid and values) from the Zoom Scan
(b) Calculation of the SAR value at every measurement point based on all stored data (A/D values and measurement parameters)
(c) Generation of a high-resolution mesh within the measured volume
(d) Interpolation of all measured values form the measurement grid to the high-resolution grid
(e) Extrapolation of the entire 3-D field distribution to the phantom surface over the distance from sensor to surface
(f) Calculation of the averaged SAR within masses of 1g and 10g

3.4.5 SAR Averaged Methods

In DASY, the interpolation and extrapolation are both based on the modified Quadratic Shepard’s method. The interpolation scheme combines a least-square fitted function method and a weighted average method which are the two basic types of computational interpolation and approximation.

Extrapolation routines are used to obtain SAR values between the lowest measurement points and the inner phantom surface. The extrapolation distance is determined by the surface detection distance and the probe sensor offset. The uncertainty increases with the extrapolation distance. To keep the uncertainty within 1% for the 1 g and 10 g cubes, the extrapolation distance should not be larger than 5 mm.

4. SAR Measurement Evaluation

4.1 EUT Configuration and Setting

<Considerations Related to WLAN for Setup and Testing>

In general, various vendor specific external test software and chipset based internal test modes are typically used for SAR measurement. These chipset based test mode utilities are generally hardware and manufacturer dependent, and often include substantial flexibility to reconfigure or reprogram a device. A Wi-Fi device must be configured to transmit continuously at the required data rate, channel bandwidth and signal modulation, using the highest transmission duty factor supported by the test mode tools for SAR measurement. The test frequencies established using test mode must correspond to the actual channel frequencies. When 802.11 frame gaps are accounted for in the transmission, a maximum transmission duty factor of 92 - 96% is typically achievable in most test mode configurations. A minimum transmission duty factor of 85% is required to avoid certain hardware and device implementation issues related to wide range SAR scaling. In addition, a periodic transmission duty factor is required for current generation SAR systems to measure SAR correctly. The reported SAR must be scaled to 100% transmission duty factor to determine compliance at the maximum tune-up tolerance limit.

According to KDB 248227 D01, this device has installed WLAN engineering testing software which can provide continuous transmitting RF signal. During WLAN SAR testing, this device was operated to transmit continuously at the maximum transmission duty with specified transmission mode, operating frequency, lowest data rate, and maximum output power.

Initial Test Configuration

An initial test configuration is determined for OFDM transmission modes in 2.4 GHz and 5 GHz bands according to the channel bandwidth, modulation and data rate combination(s) with the highest maximum output power specified for production units in each standalone and aggregated frequency band. When the same maximum power is specified for multiple transmission modes in a frequency band, the largest channel bandwidth, lowest order modulation, lowest data rate and lowest order 802.11a/g/n/ac mode is used for SAR measurement, on the highest measured output power channel in the initial test configuration, for each frequency band.

Subsequent Test Configuration

SAR measurement requirements for the remaining 802.11 transmission mode configurations that have not been tested in the initial test configuration are determined separately for each standalone and aggregated frequency band, in each exposure condition, according to the maximum output power specified for production units. Additional power measurements may be required to determine if SAR measurements are required for subsequent highest output power channels in a subsequent test configuration. When the highest reported SAR for the initial test configuration according to the initial test position or fixed exposure position requirements, is adjusted by the ratio of the subsequent test configuration to initial test configuration specified maximum output power and the adjusted SAR is ≤ 1.2 W/kg, SAR is not required for that subsequent test configuration.

SAR Test Configuration and Channel Selection

When multiple channel bandwidth configurations in a frequency band have the same specified maximum output power, the initial test configuration is using largest channel bandwidth, lowest order modulation, lowest data rate, and lowest order 802.11 mode (i.e., 802.11a is chosen over 802.11n then 802.11ac or 802.11g is chosen over 802.11n). After an initial test configuration is determined, if multiple test channels have the same measured maximum output power, the channel chosen for SAR measurement is determined according to the following.

1) The channel closest to mid-band frequency is selected for SAR measurement.

2) For channels with equal separation from mid-band frequency; for example, high and low channels or two mid-band channels, the higher frequency (number) channel is selected for SAR measurement.

Test Reduction for U-NII-1 (5.2 GHz) and U-NII-2A (5.3 GHz) Bands

For devices that operate in both U-NII bands using the same transmitter and antenna(s), SAR test reduction is determined according to the following.

1) When the same maximum output power is specified for both bands, begin SAR measurement in U-NII-2A band by applying the OFDM SAR requirements. If the highest reported SAR for a test configuration is ≤ 1.2 W/kg, SAR is not required for U-NII-1 band for that configuration (802.11 mode and exposure condition).

2) When different maximum output power is specified for the bands, begin SAR measurement in the band with higher specified maximum output power. The highest reported SAR for the tested configuration is adjusted by the ratio of lower to higher specified maximum output power for the two bands. When the adjusted SAR is ≤ 1.2 W/kg, SAR is not required for the band with lower maximum output power in that test configuration.

4.2 EUT Testing Position

This hand-held device was test on the body and limbs exposure conditions. Body SAR was tested on the Front Face and Bottom Side (the edge closest to transmitting antenna) with 1 cm separation distance. Limbs SAR was tested on the Front Face, Rear Face, Left Side, Right Side and Bottom Side without separation distance.

4.2.1 Simultaneous Transmission Possibilities

The simultaneous transmission possibilities for this device are listed as below.

Simultaneous TX Combination	Capable Transmit Configurations	Body	Extremity
1	WLAN 2.4G(Sidecar Ant) (Data) + WLAN 2.4G(Hi-power Ant) (Data)	Yes	Yes
2	WLAN 5G(Sidecar Ant) (Data) + WLAN 2.4G(Hi-power Ant) (Data)	Yes	Yes

4.3 Tissue Verification

The measuring results for tissue simulating liquid are shown as below.

Test Date	Tissue Type	Frequency (MHz)	Liquid Temp. (℃)	Measured Conductivity (σ)	Measured Permittivity (ε_r)	Target Conductivity (σ)	Target Permittivity (ε_r)	Conductivity Deviation (%)	Permittivity Deviation (%)
Sep. 08, 2016	Body	2450	23.6	2.042	52.541	1.95	52.7	4.72	-0.30
Sep. 10, 2016	Body	2450	23.5	2.039	50.838	1.95	52.7	4.56	-3.53
Sep. 08, 2016	Body	5300	23.2	5.473	47.306	5.42	48.9	0.98	-3.26
Sep. 09, 2016	Body	5600	23.4	5.898	46.563	5.77	48.5	2.22	-3.99
Sep. 08, 2016	Body	5800	23.2	6.190	46.373	6.00	48.2	3.17	-3.79
Sep. 09, 2016	Body	5800	23.4	6.185	46.167	6.00	48.2	3.08	-4.22
Sep. 08, 2016	Extremity	2450	23.6	2.042	52.541	1.95	52.7	4.72	-0.30
Sep. 10, 2016	Extremity	2450	23.5	2.039	50.838	1.95	52.7	4.56	-3.53
Sep. 20, 2016	Extremity	2450	23.4	2.023	51.714	1.95	52.7	3.74	-1.87
Sep. 08, 2016	Extremity	5300	23.2	5.473	47.306	5.42	48.9	0.98	-3.26
Sep. 09, 2016	Extremity	5300	23.4	5.462	47.107	5.42	48.9	0.77	-3.67
Sep. 09, 2016	Extremity	5600	23.4	5.898	46.563	5.77	48.5	2.22	-3.99
Sep. 08, 2016	Extremity	5800	23.2	6.190	46.373	6.00	48.2	3.17	-3.79
Sep. 09, 2016	Extremity	5800	23.4	6.185	46.167	6.00	48.2	3.08	-4.22
Sep. 10, 2016	Extremity	5800	23.5	6.087	48.226	6.00	48.2	1.45	0.05

Note:

The dielectric properties of the tissue simulating liquid must be measured within 24 hours before the SAR testing and within ±5% of the target values. Liquid temperature during the SAR testing must be within ±2 ℃.

4.4 System Validation

The SAR measurement system was validated according to procedures in KDB 865664 D01. The validation status in tabulated summary is as below.

Test Date	Probe S/N	Calibration Point		Measured Conductivity (σ)	Measured Permittivity (ε_r)	Validation for CW			Validation for Modulation		
						Sensitivity Range	Probe Linearity	Probe Isotropy	Modulation Type	Duty Factor	PAR
Sep. 08, 2016	3650	Body	2450	2.042	52.541	Pass	Pass	Pass	OFDM	N/A	Pass
Sep. 10, 2016	3971	Body	2450	2.039	50.838	Pass	Pass	Pass	OFDM	N/A	Pass
Sep. 08, 2016	3650	Body	5300	5.473	47.306	Pass	Pass	Pass	OFDM	N/A	Pass
Sep. 09, 2016	3864	Body	5600	5.898	46.563	Pass	Pass	Pass	OFDM	N/A	Pass
Sep. 08, 2016	3650	Body	5800	6.190	46.373	Pass	Pass	Pass	OFDM	N/A	Pass
Sep. 09, 2016	3650	Body	5800	6.185	46.167	Pass	Pass	Pass	OFDM	N/A	Pass
Sep. 08, 2016	3650	Extremity	2450	2.042	52.541	Pass	Pass	Pass	OFDM	N/A	Pass
Sep. 10, 2016	3971	Extremity	2450	2.039	50.838	Pass	Pass	Pass	OFDM	N/A	Pass
Sep. 20, 2016	7350	Extremity	2450	2.023	51.714	Pass	Pass	Pass	OFDM	N/A	Pass
Sep. 08, 2016	3650	Extremity	5300	5.473	47.306	Pass	Pass	Pass	OFDM	N/A	Pass
Sep. 09, 2016	3864	Extremity	5300	5.462	47.107	Pass	Pass	Pass	OFDM	N/A	Pass
Sep. 09, 2016	3864	Extremity	5600	5.898	46.563	Pass	Pass	Pass	OFDM	N/A	Pass
Sep. 08, 2016	3650	Extremity	5800	6.190	46.373	Pass	Pass	Pass	OFDM	N/A	Pass
Sep. 09, 2016	3650	Extremity	5800	6.185	46.167	Pass	Pass	Pass	OFDM	N/A	Pass
Sep. 10, 2016	3971	Extremity	5800	6.087	48.226	Pass	Pass	Pass	OFDM	N/A	Pass

4.5 System Verification

The measuring result for system verification is tabulated as below.

Test Date	Mode	Frequency (MHz)	1W Target SAR-1g (W/kg)	Measured SAR-1g (W/kg)	Normalized to 1W SAR-1g (W/kg)	Deviation (%)	Dipole S/N	Probe S/N	DAE S/N
Sep. 08, 2016	Body	2450	51.40	12.20	48.80	-5.06	869	3650	861
Sep. 10, 2016	Body	2450	51.40	12.00	48.00	-6.61	869	3971	393
Sep. 08, 2016	Body	5300	76.40	7.80	78.00	2.09	1040	3650	861
Sep. 09, 2016	Body	5600	78.40	7.94	79.40	1.28	1040	3864	1431
Sep. 08, 2016	Body	5800	75.20	7.68	76.80	2.13	1040	3650	861
Sep. 09, 2016	Body	5800	75.20	7.66	76.60	1.86	1040	3650	1431
Test Date	**Mode**	**Frequency (MHz)**	**1W Target SAR-10g (W/kg)**	**Measured SAR-10g (W/kg)**	**Normalized to 1W SAR-10g (W/kg)**	**Deviation (%)**	**Dipole S/N**	**Probe S/N**	**DAE S/N**
Sep. 08, 2016	Extremity	2450	23.90	5.68	22.72	-4.94	869	3650	861
Sep. 10, 2016	Extremity	2450	23.90	5.61	22.44	-6.11	869	3971	393
Sep. 20, 2016	Extremity	2450	23.90	5.68	22.72	-4.94	869	7350	1305
Sep. 08, 2016	Extremity	5300	21.40	2.23	22.30	4.21	1040	3650	861
Sep. 09, 2016	Extremity	5300	21.40	2.27	22.70	6.07	1040	3864	1431
Sep. 09, 2016	Extremity	5600	21.90	2.24	22.40	2.28	1040	3864	1431
Sep. 08, 2016	Extremity	5800	20.80	2.16	21.60	3.85	1040	3650	861
Sep. 09, 2016	Extremity	5800	20.80	2.15	21.50	3.37	1040	3650	1431
Sep. 10, 2016	Extremity	5800	20.80	2.23	22.30	7.21	1040	3971	393

Note:

Comparing to the reference SAR value provided by SPEAG, the validation data should be within its specification of 10 %. The result indicates the system check can meet the variation criterion and the plots can be referred to Appendix A of this report.

4.6 Maximum Output Power

4.6.1 Maximum Conducted Power

The maximum conducted average power (Unit: dBm) including tune-up tolerance is shown as below.

< Sidecar Antenna >

Mode	2.4G WLAN	5.2G WLAN	5.3G WLAN	5.6G WLAN	5.8G WLAN
802.11b	CH1: 18.5 CH6: 21.0 CH11: 18.5	N/A	N/A	N/A	N/A
802.11g	CH1: 13.0 CH6: 22.5 CH11: 13.0	N/A	N/A	N/A	N/A
802.11a	N/A	17.0	18.0	CH100: 15.0 CH116-132: 17.0 CH140: 15.5	CH149: 15.0 CH157-165: 17.5
802.11n HT20	CH1: 12.0 CH6: 22.0 CH11: 12.0	17.0	18.0	CH100: 15.0 CH116-132: 17.0 CH140: 15.5	CH149: 15.5 CH157-165: 17.5
802.11n HT40	CH3: 10.0 CH6: 14.5 CH9: 10.0	CH38: 13.5 CH46: 17.5	CH54: 18.0 CH62: 13.0	CH102: 11.5 CH110-134: 17.0	CH151: 13.0 CH159: 17.5

< Hi-Power Antenna >

Mode	2.4G WLAN
802.11b	23.5
802.11g	25.5
802.11n HT20	25.5

4.6.2 Measured Conducted Power Result

The measuring conducted average power (Unit: dBm) is shown as below.

< Sidecar Antenna >

<WLAN 2.4G>

Mode	802.11b		
Channel / Frequency (MHz)	1 (2412)	6 (2437)	11 (2462)
Average Power	17.83	**20.67**	18.31

<WLAN 5.3G>

Mode	802.11n (HT40)	
Channel / Frequency (MHz)	54 (5270)	62 (5310)
Average Power	**17.72**	12.98

<WLAN 5.6G>

Mode	802.11n (HT40)		
Channel / Frequency (MHz)	102 (5510)	110 (5550)	134 (5670)
Average Power	11.46	16.38	**16.91**

<WLAN 5.8G>

Mode	802.11n (HT40)	
Channel / Frequency (MHz)	151 (5755)	159 (5795)
Average Power	12.53	**17.48**

< Hi-Power Antenna >

<WLAN 2.4G>

Mode	802.11b		
Channel / Frequency (MHz)	1 (2412)	6 (2437)	11 (2462)
Average Power (Ant-0 + Ant-1)	**23.35**	23.05	22.87

4.7 SAR Testing Results

4.7.1 SAR Test Reduction Considerations

<KDB 447498 D01, General RF Exposure Guidance>

Testing of other required channels within the operating mode of a frequency band is not required when the reported SAR for the mid-band or highest output power channel is:

(1) ≤ 0.8 W/kg or 2.0 W/kg, for 1-g or 10-g respectively, when the transmission band is ≤ 100 MHz

(2) ≤ 0.6 W/kg or 1.5 W/kg, for 1-g or 10-g respectively, when the transmission band is between 100 MHz and 200 MHz

(3) ≤ 0.4 W/kg or 1.0 W/kg, for 1-g or 10-g respectively, when the transmission band is ≥ 200 MHz

<KDB 248227 D01, SAR Guidance for Wi-Fi Transmitters>

(1) For handsets operating next to ear, hotspot mode or mini-tablet configurations, the initial test position procedures were applied. The test position with the highest extrapolated peak SAR will be used as the initial test position. When the reported SAR of initial test position is <= 0.4 W/kg, SAR testing for remaining test positions is not required. Otherwise, SAR is evaluated at the subsequent highest peak SAR positions until the reported SAR result is <= 0.8 W/kg or all test positions are measured.

(2) For WLAN 2.4 GHz, the highest measured maximum output power channel for DSSS was selected for SAR measurement. When the reported SAR is <= 0.8 W/kg, no further SAR testing is required. Otherwise, SAR is evaluated at the next highest measured output power channel. When any reported SAR is > 1.2 W/kg, SAR is required for the third channel. For OFDM modes (802.11g/n), SAR is not required when the highest reported SAR for DSSS is adjusted by the ratio of OFDM to DSSS specified maximum output power and it is <= 1.2 W/kg.

(3) For WLAN 5 GHz, the initial test configuration was selected according to the transmission mode with the highest maximum output power. When the reported SAR of initial test configuration is > 0.8 W/kg, SAR is required for the subsequent highest measured output power channel until the reported SAR result is <= 1.2 W/kg or all required channels are measured. For other transmission modes, SAR is not required when the highest reported SAR for initial test configuration is adjusted by the ratio of subsequent test configuration to initial test configuration specified maximum output power and it is <= 1.2 W/kg.

(4) For WLAN MIMO mode, the power-based standalone SAR test exclusion or the sum of SAR provision in KDB 447498 to determine simultaneous transmission SAR test exclusion should be applied. Otherwise, SAR for MIMO mode will be measured with all applicable antennas transmitting simultaneously at the specified maximum output power of MIMO operation.

4.7.2 SAR Results for Body Exposure Condition (Separation Distance is 1.0 cm Gap)

Plot No.	Band	Mode	Test Position	Ch.	EUT Config.	Ant Status	Max. Tune-up Power (dBm)	Measured Conducted Power (dBm)	Scaling Factor	Power Drift (dB)	Measured SAR-1g (W/kg)	Scaled SAR-1g (W/kg)
	2.4G WLAN	802.11b	Front Face	6	A	Sidecar	21.0	20.67	1.08	0.02	0.114	0.12
01	2.4G WLAN	802.11b	Bottom Side	6	A	Sidecar	21.0	20.67	1.08	0.06	0.285	**0.31**
	2.4G WLAN	802.11b	Bottom Side	6	B	Sidecar	21.0	20.67	1.08	0.07	0.166	0.18
	2.4G WLAN	802.11b	Front Face	1	A	Hi-power 0+1	23.5	23.35	1.04	0.09	0.00964	0.01
	2.4G WLAN	802.11b	Bottom Side	1	A	Hi-power 0+1	23.5	23.35	1.04	0.07	0.086	0.09
	2.4G WLAN	802.11b	Bottom Side	1	B	Hi-power 0+1	23.5	23.35	1.04	-0.07	0.094	0.10
	5.3G WLAN	802.11n HT40	Front Face	54	A	Sidecar	18.0	17.72	1.07	0.00	0.123	0.13
02	5.3G WLAN	802.11n HT40	Bottom Side	54	A	Sidecar	18.0	17.72	1.07	0.05	0.164	**0.17**
	5.3G WLAN	802.11n HT40	Bottom Side	54	B	Sidecar	18.0	17.72	1.07	0.03	0.067	0.07
	5.6G WLAN	802.11n HT40	Front Face	134	A	Sidecar	17.0	16.91	1.02	0.02	0.084	0.09
03	5.6G WLAN	802.11n HT40	Bottom Side	134	A	Sidecar	17.0	16.91	1.02	0.08	0.096	**0.10**
	5.6G WLAN	802.11n HT40	Bottom Side	134	B	Sidecar	17.0	16.91	1.02	0.00	0.055	0.06
	5.8G WLAN	802.11n HT40	Front Face	159	A	Sidecar	17.5	17.48	1.00	0.1	0.065	0.07
04	5.8G WLAN	802.11n HT40	Bottom Side	159	A	Sidecar	17.5	17.48	1.00	0.04	0.139	**0.14**
	5.8G WLAN	802.11n HT40	Bottom Side	159	B	Sidecar	17.5	17.48	1.00	0.00	0.037	0.04

4.7.3 SAR Results for Extremity Exposure Condition (Separation Distance is 0 cm Gap)

Plot No.	Band	Mode	Test Position	Ch.	EUT Config.	Ant Status	Max. Tune-up Power (dBm)	Measured Conducted Power (dBm)	Scaling Factor	Power Drift (dB)	Measured SAR-10g (W/kg)	Scaled SAR-10g (W/kg)
	2.4G WLAN	802.11b	Front Face	6	A	Sidecar	21.0	20.67	1.08	-0.10	0.155	0.17
	2.4G WLAN	802.11b	Left Side	6	A	Sidecar	21.0	20.67	1.08	0.01	0.04	0.04
05	2.4G WLAN	802.11b	Right Side	6	A	Sidecar	21.0	20.67	1.08	0.10	0.385	**0.42**
	2.4G WLAN	802.11b	Right Side	6	B	Sidecar	21.0	20.67	1.08	-0.13	0.226	0.24
	2.4G WLAN	802.11b	Bottom Side	6	A	Sidecar	21.0	20.67	1.08	0.07	0.364	0.39
	2.4G WLAN	802.11b	Front Face	1	A	Hi-power 0+1	23.5	23.35	1.04	-0.11	0.00499	0.01
	2.4G WLAN	802.11b	Rear Face	1	A	Hi-power 0+1	23.5	23.35	1.04	0.09	0.277	0.29
	2.4G WLAN	802.11b	Rear Face	1	B	Hi-power 0+1	23.5	23.35	1.04	-0.01	0.338	0.35
	2.4G WLAN	802.11b	Left Side	1	A	Hi-power 0+1	23.5	23.35	1.04	-0.12	0.012	0.01
	2.4G WLAN	802.11b	Right Side	1	A	Hi-power 0+1	23.5	23.35	1.04	-0.02	0.016	0.02
	2.4G WLAN	802.11b	Bottom Side	1	A	Hi-power 0+1	23.5	23.35	1.04	-0.07	0.185	0.19
	5.3G WLAN	802.11n HT40	Front Face	54	A	Sidecar	18.0	17.72	1.07	0.04	0.028	0.03
	5.3G WLAN	802.11n HT40	Left Side	54	A	Sidecar	18.0	17.72	1.07	0.00	0.000000493	0.00
	5.3G WLAN	802.11n HT40	Right Side	54	A	Sidecar	18.0	17.72	1.07	-0.09	0.253	0.27
06	5.3G WLAN	802.11n HT40	Right Side	54	B	Sidecar	18.0	17.72	1.07	-0.03	0.298	**0.32**
	5.3G WLAN	802.11n HT40	Bottom Side	54	A	Sidecar	18.0	17.72	1.07	0.08	0.113	0.12
	5.6G WLAN	802.11n HT40	Front Face	134	A	Sidecar	17.0	16.91	1.02	0.08	0.059	0.06
	5.6G WLAN	802.11n HT40	Left Side	134	A	Sidecar	17.0	16.91	1.02	0.00	0.0000059	0.00
07	5.6G WLAN	802.11n HT40	Right Side	134	A	Sidecar	17.0	16.91	1.02	0.07	0.164	**0.17**
	5.6G WLAN	802.11n HT40	Right Side	134	B	Sidecar	17.0	16.91	1.02	-0.04	0.136	0.14
	5.6G WLAN	802.11n HT40	Bottom Side	134	A	Sidecar	17.0	16.91	1.02	0.04	0.072	0.07
	5.8G WLAN	802.11n HT40	Front Face	159	A	Sidecar	17.5	17.48	1.00	0.03	0.052	0.05
	5.8G WLAN	802.11n HT40	Left Side	159	A	Sidecar	17.5	17.48	1.00	-0.01	0.011	0.01
	5.8G WLAN	802.11n HT40	Right Side	159	A	Sidecar	17.5	17.48	1.00	-0.1	0.155	0.16
08	5.8G WLAN	802.11n HT40	Right Side	159	B	Sidecar	17.5	17.48	1.00	0.02	0.182	**0.18**
	5.8G WLAN	802.11n HT40	Bottom Side	159	A	Sidecar	17.5	17.48	1.00	0.05	0.121	0.12

4.7.4 SAR Measurement Variability

According to KDB 865664 D01, SAR measurement variability was assessed for each frequency band, which is determined by the SAR probe calibration point and tissue-equivalent medium used for the device measurements. When both head and body tissue-equivalent media are required for SAR measurements in a frequency band, the variability measurement procedures should be applied to the tissue medium with the highest measured SAR, using the highest measured SAR configuration for that tissue-equivalent medium. Alternatively, if the highest measured SAR for both head and body tissue-equivalent media are ≤ 1.45 W/kg and the ratio of these highest SAR values, i.e., largest divided by smallest value, is ≤ 1.10, the highest SAR configuration for either head or body tissue-equivalent medium may be used to perform the repeated measurement. These additional measurements are repeated after the completion of all measurements requiring the same head or body tissue-equivalent medium in a frequency band. The test device should be returned to ambient conditions (normal room temperature) with the battery fully charged before it is re-mounted on the device holder for the repeated measurement(s) to minimize any unexpected variations in the repeated results.

Since all the measured SAR are less than 0.8 W/kg, the repeated measurement is not required.

4.7.5 Simultaneous Multi-band Transmission Evaluation

<Estimated SAR Calculation>

According to KDB 447498 D01, when standalone SAR test exclusion applies to an antenna that transmits simultaneously with other antennas, the standalone SAR was estimated according to following formula to result in substantially conservative SAR values of <= 0.4 W/kg to determine simultaneous transmission SAR test exclusion.

$$\text{Estimated SAR} = \frac{\text{Max. Tune up Power}_{(\text{mW})}}{\text{Min. Test Separation Distance}_{(\text{mm})}} \times \frac{\sqrt{f_{(\text{GHz})}}}{7.5}$$

If the minimum test separation distance is < 5 mm, a distance of 5 mm is used for estimated SAR calculation. When the test separation distance is > 50 mm, the 0.4 W/kg is used for SAR-1g.

Mode / Band	Frequency (GHz)	Max. Tune-up Power (dBm)	Test Position	Separation Distance (mm)	Estimated SAR (W/kg)
WLAN (DTS)	2.462	25.5	Extremity	5	1.00
WLAN (NII)	5.2	17.5	Extremity	5	1.00
WLAN (NII)	5.3	18.0	Extremity	5	1.00
WLAN (NII)	5.6	17.0	Extremity	5	1.00
WLAN (NII)	5.8	17.5	Extremity	5	1.00

Note:

1. The separation distance is determined from the outer housing of the EUT to the user.
2. When standalone SAR testing is not required, an estimated SAR can be applied to determine simultaneous transmission SAR test exclusion.

<SAR Summation Analysis>

Simultaneous transmission SAR test exclusion is determined for each operating configuration and exposure condition according to the reported standalone SAR of each applicable simultaneous transmitting antenna. When the sum of SAR_{1g} of all simultaneously transmitting antennas in an operating mode and exposure condition combination is within the SAR limit (SAR_{1g} 1.6 W/kg), the simultaneous transmission SAR is not required. When the sum of SAR_{1g} is greater than the SAR limit (SAR_{1g} 1.6 W/kg), SAR test exclusion is determined by the SPLSR.

No.	Conditions (SAR1 + SAR2)	Exposure Condition	Test Position	Max. SAR1	Max. SAR2	SAR Summation	SPLSR Analysis
1	DTS (Sidecar Ant) + DTS (Hi-Power Ant)	Body	Front Face	0.12	0.01	0.13	Σ SAR < 1.6, Not required
			Bottom Side	0.31	0.10	0.41	Σ SAR < 1.6, Not required
2	NII (Sidecar Ant) + DTS (Hi-Power Ant)	Body	Front Face	0.13	0.01	0.14	Σ SAR < 1.6, Not required
			Bottom Side	0.17	0.10	0.27	Σ SAR < 1.6, Not required
3	DTS (Sidecar Ant) + DTS (Hi-Power Ant)	Extremity	Front Face	0.17	0.01	0.18	Σ 10g SAR < 4.0, Not required
			Rear Face	1.00	0.35	1.35	Σ 10g SAR < 4.0, Not required
			Left Side	0.04	0.01	0.05	Σ 10g SAR < 4.0, Not required
			Right Side	0.42	0.02	0.44	Σ 10g SAR < 4.0, Not required
			Bottom Side	0.39	0.19	0.58	Σ 10g SAR < 4.0, Not required
4	NII (Sidecar Ant) + DTS (Hi-Power Ant)	Extremity	Front Face	0.06	0.01	0.07	Σ 10g SAR < 4.0, Not required
			Rear Face	1.00	0.35	1.35	Σ 10g SAR < 4.0, Not required
			Left Side	0.01	0.01	0.02	Σ 10g SAR < 4.0, Not required
			Right Side	0.32	0.02	0.34	Σ 10g SAR < 4.0, Not required
			Bottom Side	0.12	0.19	0.31	Σ 10g SAR < 4.0, Not required

Test Engineer： Vic Wu

5. Calibration of Test Equipment

Equipment	Manufacturer	Model	SN	Cal. Date	Cal. Interval
System Validation Dipole	SPEAG	D2450V2	869	Jun. 21, 2016	1 Year
System Validation Dipole	SPEAG	D5GHzV2	1040	Jun. 17, 2016	1 Year
Dosimetric E-Field Probe	SPEAG	EX3DV4	3650	Jul. 25, 2016	1 Year
Dosimetric E-Field Probe	SPEAG	EX3DV4	3864	Jul. 25, 2016	1 Year
Dosimetric E-Field Probe	SPEAG	EX3DV4	3971	Mar. 23, 2016	1 Year
Dosimetric E-Field Probe	SPEAG	EX3DV4	7350	Dec. 17, 2015	1 Year
Data Acquisition Electronics	SPEAG	DAE4	861	Jun. 16, 2016	1 Year
Data Acquisition Electronics	SPEAG	DAE4	1431	Mar. 21, 2016	1 Year
Data Acquisition Electronics	SPEAG	DAE3	393	Jan. 12, 2016	1 Year
Data Acquisition Electronics	SPEAG	DAE4	1305	Dec. 11, 2015	1 Year
Spectrum Analyzer	R&S	FSL6	102006	Mar. 25, 2016	1 Year
ENA Series Network Analyzer	Agilent	E5071C	MY46214281	Jun. 13, 2016	1 Year
Vector Signal Generator	Anritsu	MG3710A	6201599977	Mar. 22, 2016	1 Year
Power Meter	Anritsu	ML2495A	1218009	Jul. 06, 2016	1 Year
Power Sensor	Anritsu	MA2411B	1207252	Jul. 06, 2016	1 Year
Thermometer	YFE	YF-160A	150601220	May. 04, 2016	1 Year

6. Measurement Uncertainty

Source of Uncertainty	Tolerance (± %)	Probability Distribution	Divisor	Ci (1g)	Ci (10g)	Standard Uncertainty (± %, 1g)	Standard Uncertainty (± %, 10g)	Vi
Measurement System								
Probe Calibration	6.0	Normal	1	1	1	6.0	6.0	∞
Axial Isotropy	4.7	Rectangular	√3	0.707	0.707	1.9	1.9	∞
Hemispherical Isotropy	9.6	Rectangular	√3	0.707	0.707	3.9	3.9	∞
Boundary Effect	1.0	Rectangular	√3	1	1	0.6	0.6	∞
Linearity	4.7	Rectangular	√3	1	1	2.7	2.7	∞
System Detection Limits	0.25	Rectangular	√3	1	1	0.14	0.14	∞
Readout Electronics	0.3	Normal	1	1	1	0.3	0.3	∞
Response Time	0.0	Rectangular	√3	1	1	0.0	0.0	∞
Integration Time	1.7	Rectangular	√3	1	1	1.0	1.0	∞
RF Ambient Conditions - Noise	3.0	Rectangular	√3	1	1	1.7	1.7	∞
RF Ambient Conditions - Reflections	3.0	Rectangular	√3	1	1	1.7	1.7	∞
Probe Positioner Mechanical Tolerance	0.4	Rectangular	√3	1	1	0.2	0.2	∞
Probe Positioning with Respect to Phantom Shell	2.9	Rectangular	√3	1	1	1.7	1.7	∞
Extrapolation, interpolation, and integration algorithms for max. SAR evaluation	2.0	Rectangular	√3	1	1	1.2	1.2	∞
Test Sample Related								
Test Sample Positioning	1.5 / 0.7	Normal	1	1	1	1.5	0.7	32
Device Holder Uncertainty	4.2 / 1.8	Normal	1	1	1	4.2	1.8	32
Output Power Variation - SAR Drift Measurement	5.0	Rectangular	√3	1	1	2.9	2.9	∞
Phantom and Tissue Parameters								
Phantom Uncertainty (Shape and Thickness Tolerances)	7.2	Rectangular	√3	1	1	4.2	4.2	∞
Liquid Conductivity - Deviation from Target Values	5.0	Rectangular	√3	0.64	0.43	1.8	1.2	∞
Liquid Conductivity - Measurement Uncertainty	1.0	Normal	1	0.64	0.43	0.6	0.4	25
Liquid Permittivity - Deviation from Target Values	5.0	Rectangular	√3	0.60	0.49	1.7	1.4	∞
Liquid Permittivity - Measurement Uncertainty	0.5	Normal	1	0.60	0.49	0.3	0.2	25
Combined Standard Uncertainty						± 11.2 %	± 10.4 %	
Expanded Uncertainty (K=2)						**± 22.4 %**	**± 20.8 %**	

Uncertainty budget for frequency range 300 MHz to 3 GHz

Source of Uncertainty	Tolerance (± %)	Probability Distribution	Divisor	Ci (1g)	Ci (10g)	Standard Uncertainty (± %, 1g)	Standard Uncertainty (± %, 10g)	Vi
Measurement System								
Probe Calibration	6.55	Normal	1	1	1	6.55	6.55	∞
Axial Isotropy	4.7	Rectangular	√3	0.707	0.707	1.9	1.9	∞
Hemispherical Isotropy	9.6	Rectangular	√3	0.707	0.707	3.9	3.9	∞
Boundary Effect	2.0	Rectangular	√3	1	1	1.2	1.2	∞
Linearity	4.7	Rectangular	√3	1	1	2.7	2.7	∞
System Detection Limits	0.25	Rectangular	√3	1	1	0.14	0.14	∞
Readout Electronics	0.3	Normal	1	1	1	0.3	0.3	∞
Response Time	0.0	Rectangular	√3	1	1	0.0	0.0	∞
Integration Time	1.7	Rectangular	√3	1	1	1.0	1.0	∞
RF Ambient Conditions - Noise	3.0	Rectangular	√3	1	1	1.7	1.7	∞
RF Ambient Conditions - Reflections	3.0	Rectangular	√3	1	1	1.7	1.7	∞
Probe Positioner Mechanical Tolerance	0.4	Rectangular	√3	1	1	0.2	0.2	∞
Probe Positioning with Respect to Phantom Shell	6.7	Rectangular	√3	1	1	3.9	3.9	∞
Extrapolation, interpolation, and integration algorithms for max. SAR evaluation	4.0	Rectangular	√3	1	1	2.3	2.3	∞
Test Sample Related								
Test Sample Positioning	1.5 / 0.7	Normal	1	1	1	1.5	0.7	32
Device Holder Uncertainty	4.2 / 1.8	Normal	1	1	1	4.2	1.8	32
Output Power Variation - SAR Drift Measurement	5.0	Rectangular	√3	1	1	2.9	2.9	∞
Phantom and Tissue Parameters								
Phantom Uncertainty (Shape and Thickness Tolerances)	7.6	Rectangular	√3	1	1	4.4	4.4	∞
Liquid Conductivity - Deviation from Target Values	5.0	Rectangular	√3	0.64	0.43	1.8	1.2	∞
Liquid Conductivity - Measurement Uncertainty	1.0	Normal	1	0.64	0.43	0.6	0.4	25
Liquid Permittivity - Deviation from Target Values	5.0	Rectangular	√3	0.60	0.49	1.7	1.4	∞
Liquid Permittivity - Measurement Uncertainty	0.5	Normal	1	0.60	0.49	0.3	0.2	25
Combined Standard Uncertainty						± 12.3 %	± 11.5 %	
Expanded Uncertainty (K=2)						**± 24.6 %**	**± 23.0 %**	

Uncertainty budget for frequency range 3 GHz to 6 GHz

7. Information on the Testing Laboratories

We, Bureau Veritas Consumer Products Services (H.K.) Ltd., Taoyuan Branch, were founded in 1988 to provide our best service in EMC, Radio, Telecom and Safety consultation. Our laboratories are accredited and approved according to ISO/IEC 17025.

If you have any comments, please feel free to contact us at the following:

Taiwan HwaYa EMC/RF/Safety/Telecom Lab:
Add: No. 19, Hwa Ya 2nd Rd, Wen Hwa Vil., Kwei Shan Hsiang, Taoyuan Hsien 333, Taiwan, R.O.C.
Tel: 886-3-318-3232
Fax: 886-3-327-0892

Taiwan LinKo EMC/RF Lab:
Add: No. 47-2, 14th Ling, Chia Pau Vil., Linkou Dist., New Taipei City 244, Taiwan, R.O.C.
Tel: 886-2-2605-2180
Fax: 886-2-2605-1924

Taiwan HsinChu EMC/RF Lab:
Add: No. 81-1, Lu Liao Keng, 9th Ling, Wu Lung Vil., Chiung Lin Township, Hsinchu County 307, Taiwan, R.O.C.
Tel: 886-3-593-5343
Fax: 886-3-593-5342

Email: service.adt@tw.bureauveritas.com
Web Site: www.adt.com.tw

The road map of all our labs can be found in our web site also.

---END---

Appendix A. SAR Plots of System Verification

The plots for system verification with largest deviation for each SAR system combination are shown as follows.

Test Laboratory: Bureau Veritas ADT SAR/HAC Testing Lab Date: 2016/09/10

System Check_B2450_160910

DUT: Dipole 2450 MHz; Type: D2450V2; SN: 869

Communication System: CW; Frequency: 2450 MHz;Duty Cycle: 1:1
Medium: B19T27N3_0910 Medium parameters used: f = 2450 MHz; σ = 2.039 S/m; ε_r = 50.838; ρ = 1000 kg/m^3
Ambient Temperature：23.9 ℃ ; Liquid Temperature：23.5 ℃

DASY5 Configuration:
- Probe: EX3DV4 - SN3971; ConvF(7.24, 7.24, 7.24); Calibrated: 2016/03/23;
- Sensor-Surface: 1.4mm (Mechanical Surface Detection)
- Electronics: DAE3 Sn393; Calibrated: 2016/01/12
- Phantom: Twin SAM Phantom_1654; Type: QD000P40;
- Measurement SW: DASY52, Version 52.8 (8); SEMCAD X Version 14.6.10 (7373)

Pin=250mW/Area Scan (81x81x1): Interpolated grid: dx=1.200 mm, dy=1.200 mm
Maximum value of SAR (interpolated) = 18.5 W/kg

Pin=250mW/Zoom Scan (7x7x7)/Cube 0: Measurement grid: dx=5mm, dy=5mm, dz=5mm
Reference Value = 96.15 V/m; Power Drift = -0.03 dB
Peak SAR (extrapolated) = 24.3 W/kg
SAR(1 g) = 12 W/kg; SAR(10 g) = 5.61 W/kg
Maximum value of SAR (measured) = 18.3 W/kg

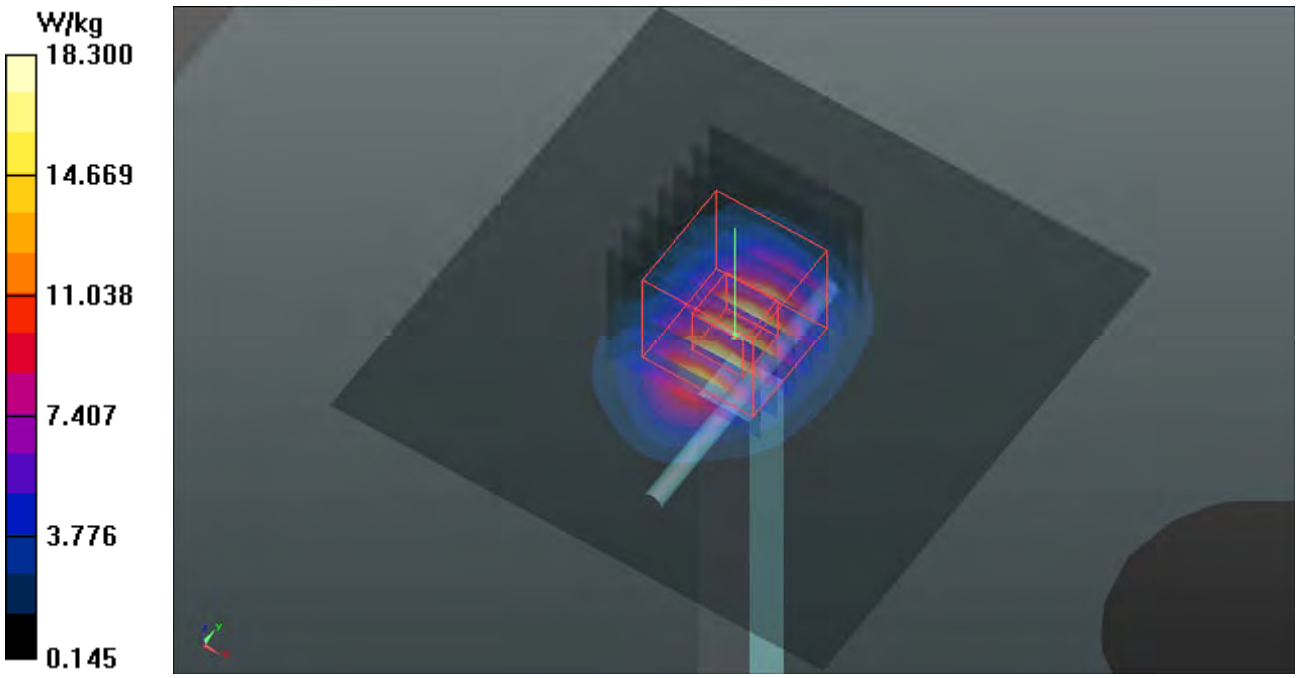

Test Laboratory: Bureau Veritas ADT SAR/HAC Testing Lab Date: 2016/09/08

System Check_B5300_160908

DUT: Dipole 5 GHz; Type: D5GHzV2; SN: 1040

Communication System: CW; Frequency: 5300 MHz;Duty Cycle: 1:1
Medium: B34T60N3_0908 Medium parameters used: f = 5300 MHz; σ = 5.473 S/m; ε_r = 47.306; ρ = 1000 kg/m^3
Ambient Temperature：23.7 ℃ ; Liquid Temperature：23.2 ℃

DASY5 Configuration:
- Probe: EX3DV4 - SN3650; ConvF(4.75, 4.75, 4.75); Calibrated: 2016/07/25;
- Sensor-Surface: 1.4mm (Mechanical Surface Detection)
- Electronics: DAE4 Sn861; Calibrated: 2016/06/16
- Phantom: Twin SAM Phantom_1653; Type: QD000P40;
- Measurement SW: DASY52, Version 52.8 (8); SEMCAD X Version 14.6.10 (7373)

Pin=100mW/Area Scan (91x91x1): Interpolated grid: dx=1.000 mm, dy=1.000 mm
Maximum value of SAR (interpolated) = 18.1 W/kg

Pin=100mW/Zoom Scan (7x7x12)/Cube 0: Measurement grid: dx=4mm, dy=4mm, dz=2mm
Reference Value = 60.13 V/m; Power Drift = -0.04 dB
Peak SAR (extrapolated) = 29.4 W/kg
SAR(1 g) = 7.8 W/kg; SAR(10 g) = 2.23 W/kg
Maximum value of SAR (measured) = 18.8 W/kg

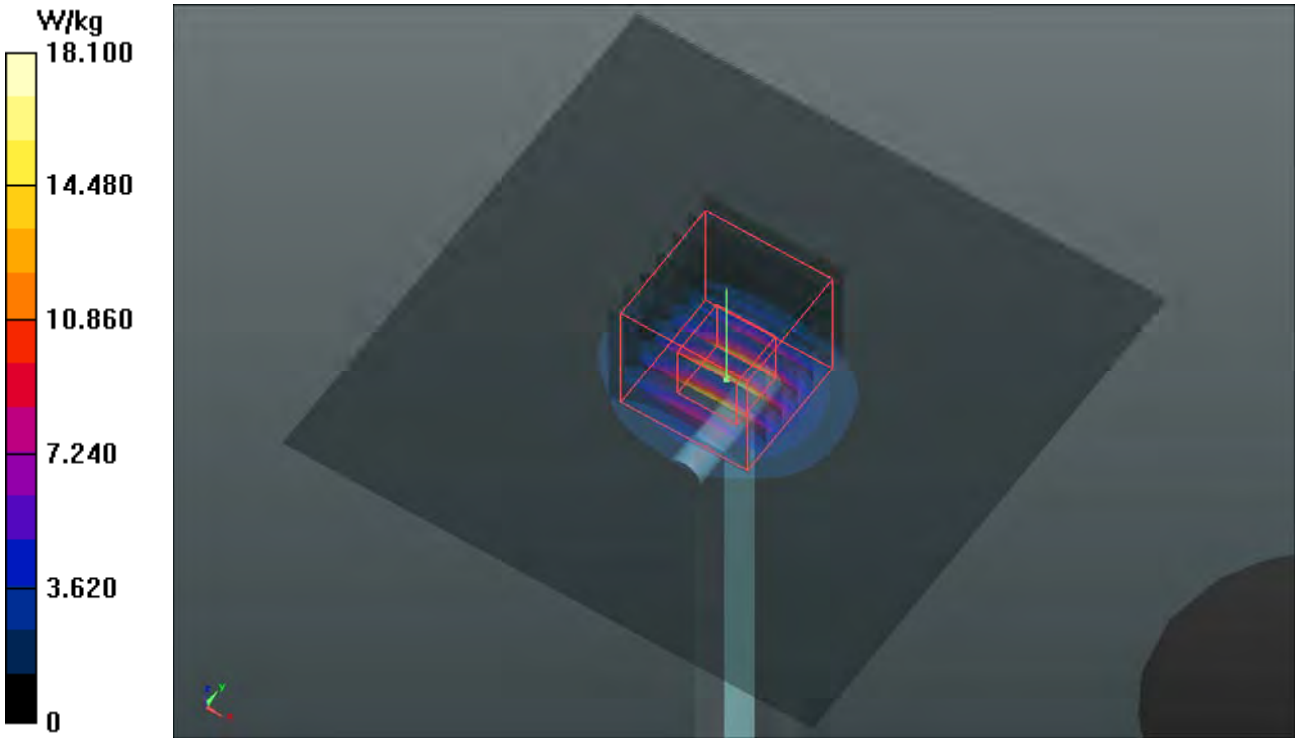

Test Laboratory: Bureau Veritas ADT SAR/HAC Testing Lab Date: 2016/09/09

System Check_B5600_160909

DUT: Dipole 5 GHz; Type: D5GHzV2; SN: 1040

Communication System: CW; Frequency: 5600 MHz;Duty Cycle: 1:1
Medium: B34T60N1_0909 Medium parameters used: f = 5600 MHz; σ = 5.898 S/m; ε_r = 46.563; ρ = 1000 kg/m^3
Ambient Temperature：23.7 ℃ ; Liquid Temperature：23.4 ℃

DASY5 Configuration:
- Probe: EX3DV4 - SN3864; ConvF(3.85, 3.85, 3.85); Calibrated: 2016/07/25;
- Sensor-Surface: 1.4mm (Mechanical Surface Detection)
- Electronics: DAE4 Sn1431; Calibrated: 2016/03/21
- Phantom: Twin SAM Phantom_1822; Type: QD000P40;
- Measurement SW: DASY52, Version 52.8 (8); SEMCAD X Version 14.6.10 (7373)

Pin=100mW/Area Scan (91x91x1): Interpolated grid: dx=1.000 mm, dy=1.000 mm
Maximum value of SAR (interpolated) = 18.4 W/kg

Pin=100mW/Zoom Scan (7x7x12)/Cube 0: Measurement grid: dx=4mm, dy=4mm, dz=2mm
Reference Value = 67.46 V/m; Power Drift = -0.09 dB
Peak SAR (extrapolated) = 31.6 W/kg
SAR(1 g) = 7.94 W/kg; SAR(10 g) = 2.24 W/kg
Maximum value of SAR (measured) = 19.7 W/kg

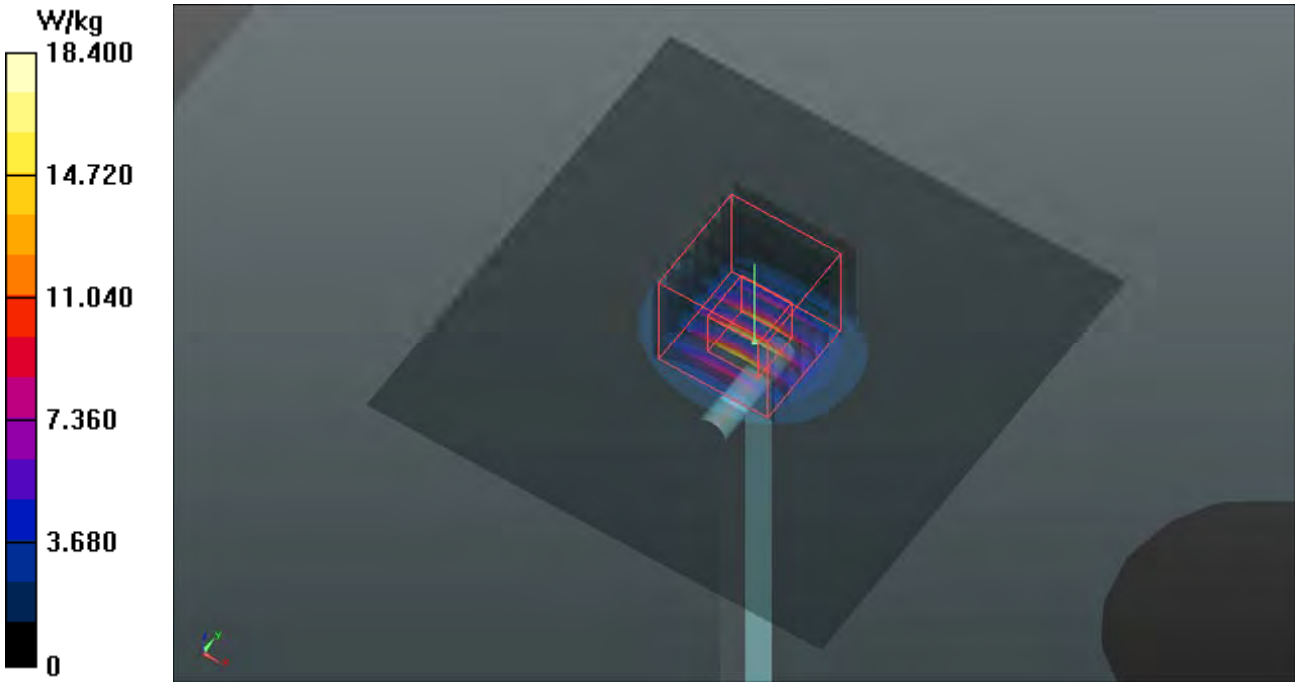

Test Laboratory: Bureau Veritas ADT SAR/HAC Testing Lab Date: 2016/09/08

System Check_B5800_160908

DUT: Dipole 5 GHz; Type: D5GHzV2; SN: 1040

Communication System: CW; Frequency: 5800 MHz;Duty Cycle: 1:1
Medium: B34T60N3_0908 Medium parameters used: f = 5800 MHz; σ = 6.19 S/m; ε_r = 46.373; ρ = 1000 kg/m^3
Ambient Temperature：23.7 ℃ ; Liquid Temperature：23.2 ℃

DASY5 Configuration:
- Probe: EX3DV4 - SN3650; ConvF(4.36, 4.36, 4.36); Calibrated: 2016/07/25;
- Sensor-Surface: 1.4mm (Mechanical Surface Detection)
- Electronics: DAE4 Sn861; Calibrated: 2016/06/16
- Phantom: Twin SAM Phantom_1653; Type: QD000P40;
- Measurement SW: DASY52, Version 52.8 (8); SEMCAD X Version 14.6.10 (7373)

Pin=100mW/Area Scan (91x91x1): Interpolated grid: dx=1.000 mm, dy=1.000 mm
Maximum value of SAR (interpolated) = 15.5 W/kg

Pin=100mW/Zoom Scan (7x7x12)/Cube 0: Measurement grid: dx=4mm, dy=4mm, dz=2mm
Reference Value = 56.99 V/m; Power Drift = -0.02 dB
Peak SAR (extrapolated) = 32.9 W/kg
SAR(1 g) = 7.68 W/kg; SAR(10 g) = 2.16 W/kg
Maximum value of SAR (measured) = 16.5 W/kg

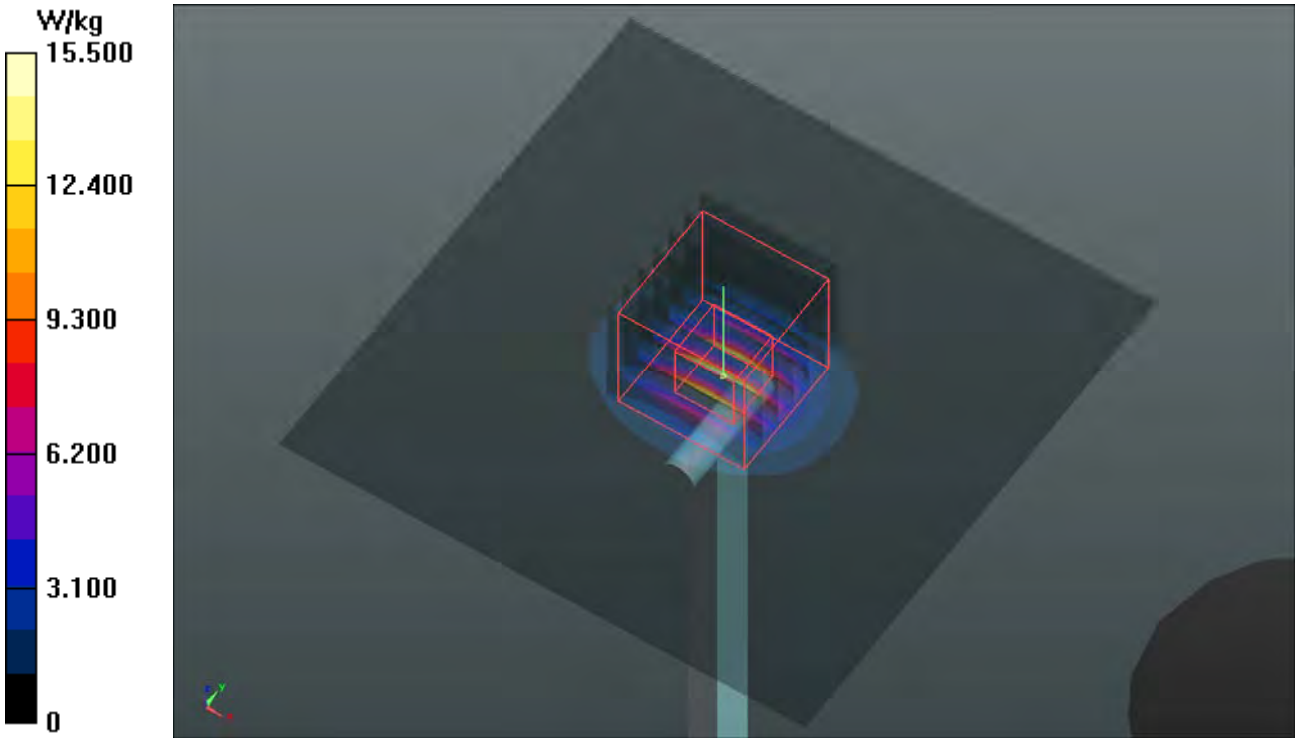

Test Laboratory: Bureau Veritas ADT SAR/HAC Testing Lab Date: 2016/09/10

System Check_B2450_160910

DUT: Dipole 2450 MHz; Type: D2450V2; SN: 869

Communication System: CW; Frequency: 2450 MHz;Duty Cycle: 1:1
Medium: B19T27N3_0910 Medium parameters used: f = 2450 MHz; σ = 2.039 S/m; ε_r = 50.838; ρ = 1000 kg/m^3
Ambient Temperature：23.9 ℃ ; Liquid Temperature：23.5 ℃

DASY5 Configuration:
- Probe: EX3DV4 - SN3971; ConvF(7.24, 7.24, 7.24); Calibrated: 2016/03/23;
- Sensor-Surface: 1.4mm (Mechanical Surface Detection)
- Electronics: DAE3 Sn393; Calibrated: 2016/01/12
- Phantom: Twin SAM Phantom_1654; Type: QD000P40;
- Measurement SW: DASY52, Version 52.8 (8); SEMCAD X Version 14.6.10 (7373)

Pin=250mW/Area Scan (81x81x1): Interpolated grid: dx=1.200 mm, dy=1.200 mm
Maximum value of SAR (interpolated) = 18.5 W/kg

Pin=250mW/Zoom Scan (7x7x7)/Cube 0: Measurement grid: dx=5mm, dy=5mm, dz=5mm
Reference Value = 96.15 V/m; Power Drift = -0.03 dB
Peak SAR (extrapolated) = 24.3 W/kg
SAR(1 g) = 12 W/kg; SAR(10 g) = 5.61 W/kg
Maximum value of SAR (measured) = 18.3 W/kg

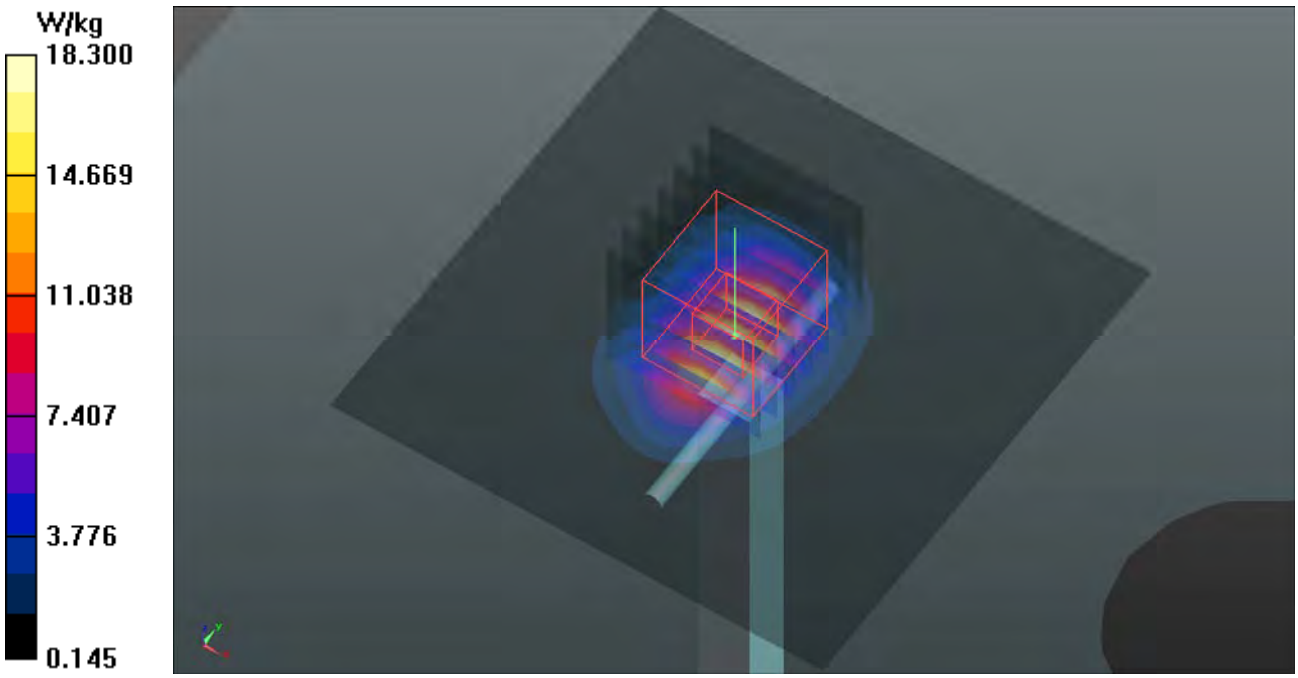

Test Laboratory: Bureau Veritas ADT SAR/HAC Testing Lab Date: 2016/09/09

System Check_B5300_160909

DUT: Dipole 5 GHz; Type: D5GHzV2; SN: 1040

Communication System: CW; Frequency: 5300 MHz;Duty Cycle: 1:1
Medium: B34T60N1_0909 Medium parameters used: f = 5300 MHz; σ = 5.462 S/m; ε_r = 47.107; ρ = 1000 kg/m^3
Ambient Temperature：23.7 ℃ ; Liquid Temperature：23.4 ℃

DASY5 Configuration:
- Probe: EX3DV4 - SN3864; ConvF(4.32, 4.32, 4.32); Calibrated: 2016/07/25;
- Sensor-Surface: 1.4mm (Mechanical Surface Detection)
- Electronics: DAE4 Sn1431; Calibrated: 2016/03/21
- Phantom: Twin SAM Phantom_1822; Type: QD000P40;
- Measurement SW: DASY52, Version 52.8 (8); SEMCAD X Version 14.6.10 (7373)

Pin=100mW/Area Scan (91x91x1): Interpolated grid: dx=1.000 mm, dy=1.000 mm
Maximum value of SAR (interpolated) = 18.3 W/kg

Pin=100mW/Zoom Scan (7x7x12)/Cube 0: Measurement grid: dx=4mm, dy=4mm, dz=2mm
Reference Value = 59.29 V/m; Power Drift = -0.09 dB
Peak SAR (extrapolated) = 29.8 W/kg
SAR(1 g) = 7.86 W/kg; SAR(10 g) = 2.27 W/kg
Maximum value of SAR (measured) = 19.3 W/kg

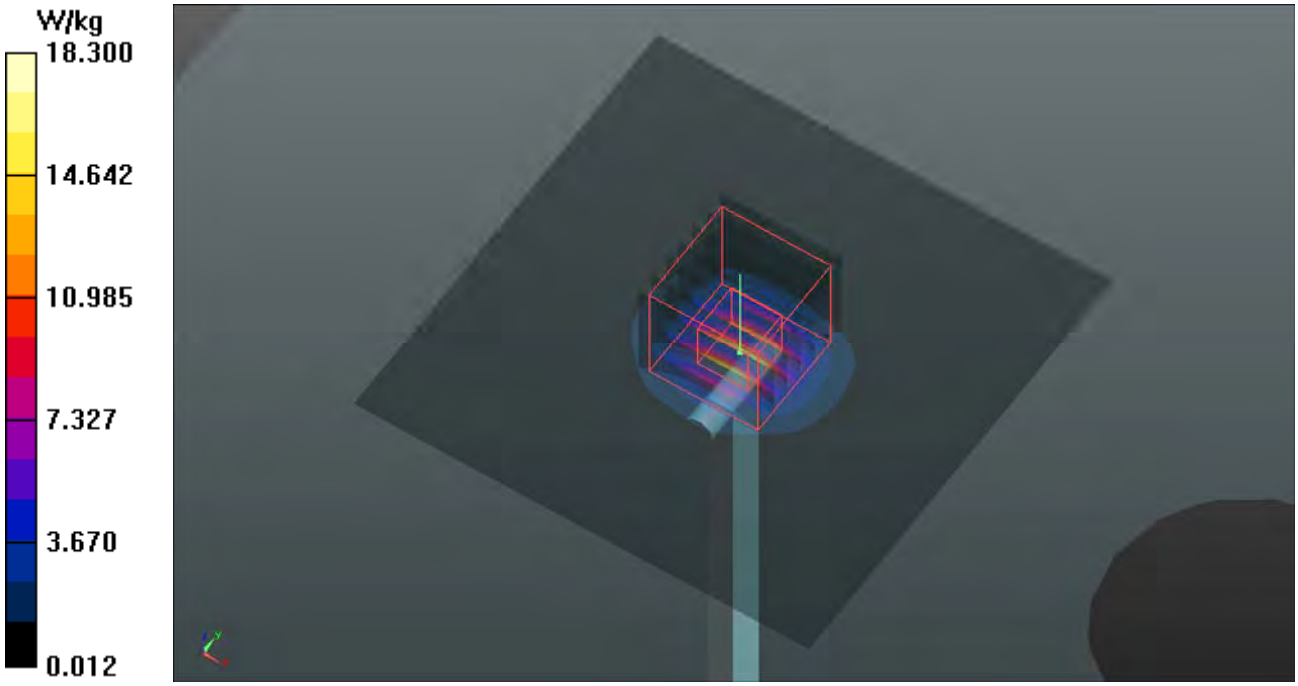

Test Laboratory: Bureau Veritas ADT SAR/HAC Testing Lab Date: 2016/09/09

System Check_B5600_160909

DUT: Dipole 5 GHz; Type: D5GHzV2; SN: 1040

Communication System: CW; Frequency: 5600 MHz;Duty Cycle: 1:1
Medium: B34T60N1_0909 Medium parameters used: f = 5600 MHz; σ = 5.898 S/m; ε_r = 46.563; ρ = 1000 kg/m^3
Ambient Temperature：23.7 ℃ ; Liquid Temperature：23.4 ℃

DASY5 Configuration:
- Probe: EX3DV4 - SN3864; ConvF(3.85, 3.85, 3.85); Calibrated: 2016/07/25;
- Sensor-Surface: 1.4mm (Mechanical Surface Detection)
- Electronics: DAE4 Sn1431; Calibrated: 2016/03/21
- Phantom: Twin SAM Phantom_1822; Type: QD000P40;
- Measurement SW: DASY52, Version 52.8 (8); SEMCAD X Version 14.6.10 (7373)

Pin=100mW/Area Scan (91x91x1): Interpolated grid: dx=1.000 mm, dy=1.000 mm
Maximum value of SAR (interpolated) = 18.4 W/kg

Pin=100mW/Zoom Scan (7x7x12)/Cube 0: Measurement grid: dx=4mm, dy=4mm, dz=2mm
Reference Value = 67.46 V/m; Power Drift = -0.09 dB
Peak SAR (extrapolated) = 31.6 W/kg
SAR(1 g) = 7.94 W/kg; SAR(10 g) = 2.24 W/kg
Maximum value of SAR (measured) = 19.7 W/kg

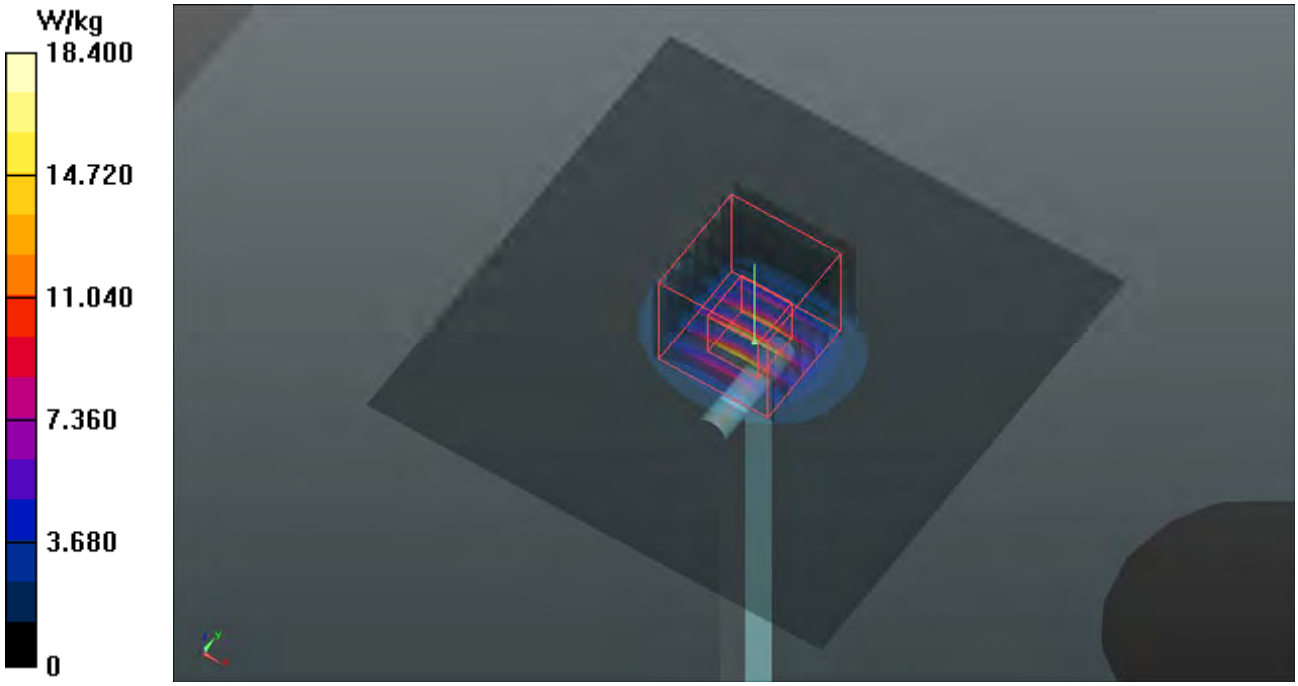

Test Laboratory: Bureau Veritas ADT SAR/HAC Testing Lab Date: 2016/09/10

System Check_B5800_160910

DUT: Dipole 5 GHz; Type: D5GHzV2; SN: 1040

Communication System: CW; Frequency: 5800 MHz;Duty Cycle: 1:1
Medium: B34T60N1_0910 Medium parameters used: f = 5800 MHz; σ = 6.087 S/m; ε_r = 48.226; ρ = 1000 kg/m^3
Ambient Temperature：23.9 ℃ ; Liquid Temperature：23.5 ℃

DASY5 Configuration:
- Probe: EX3DV4 - SN3971; ConvF(3.9, 3.9, 3.9); Calibrated: 2016/03/23;
- Sensor-Surface: 1.4mm (Mechanical Surface Detection)
- Electronics: DAE3 Sn393; Calibrated: 2016/01/12
- Phantom: Twin SAM Phantom_1485; Type: QD000P40;
- Measurement SW: DASY52, Version 52.8 (8); SEMCAD X Version 14.6.10 (7373)

Pin=100mW/Area Scan (91x91x1): Interpolated grid: dx=1.000 mm, dy=1.000 mm
Maximum value of SAR (interpolated) = 18.7 W/kg

Pin=100mW/Zoom Scan (7x7x12)/Cube 0: Measurement grid: dx=4mm, dy=4mm, dz=2mm
Reference Value = 68.14 V/m; Power Drift = -0.07 dB
Peak SAR (extrapolated) = 34.2 W/kg
SAR(1 g) = 7.97 W/kg; SAR(10 g) = 2.23 W/kg
Maximum value of SAR (measured) = 20.8 W/kg

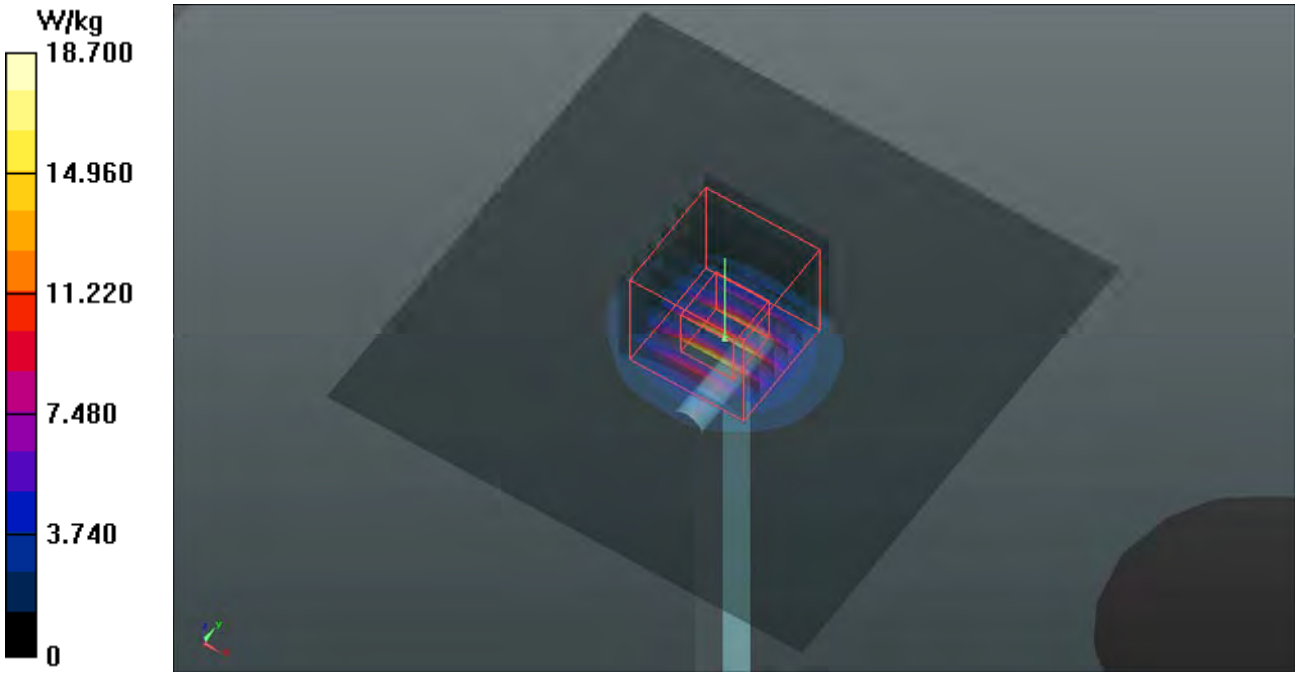

Appendix B. SAR Plots of SAR Measurement

The SAR plots for highest measured SAR in each exposure configuration, wireless mode and frequency band combination, and measured SAR > 1.5 W/kg are shown as follows.

P01 2.4G WLAN_802.11b_Bottom Side_1cm_Ch6_Sample A_Ant Sidecar

DUT: 160805C22

Communication System: WLAN_2.4G; Frequency: 2437 MHz;Duty Cycle: 1:1
Medium: B19T27N3_0908 Medium parameters used: f = 2437 MHz; σ = 2.026 S/m; ε_r = 52.575; ρ = 1000 kg/m^3
Ambient Temperature：23.9 ℃ ; Liquid Temperature：23.6 ℃

DASY5 Configuration:
- Probe: EX3DV4 - SN3650; ConvF(7.36, 7.36, 7.36); Calibrated: 2016/07/25;
- Sensor-Surface: 1.4mm (Mechanical Surface Detection)
- Electronics: DAE4 Sn861; Calibrated: 2016/06/16
- Phantom: Twin SAM Phantom_1653; Type: QD000P40;
- Measurement SW: DASY52, Version 52.8 (8); SEMCAD X Version 14.6.10 (7373)

- Area Scan (121x171x1): Interpolated grid: dx=1.200 mm, dy=1.200 mm
Maximum value of SAR (interpolated) = 0.408 W/kg

- Zoom Scan (5x5x7)/Cube 0: Measurement grid: dx=8mm, dy=8mm, dz=5mm
Reference Value = 4.858 V/m; Power Drift = 0.06 dB
Peak SAR (extrapolated) = 0.498 W/kg
SAR(1 g) = 0.285 W/kg; SAR(10 g) = 0.167 W/kg
Maximum value of SAR (measured) = 0.416 W/kg

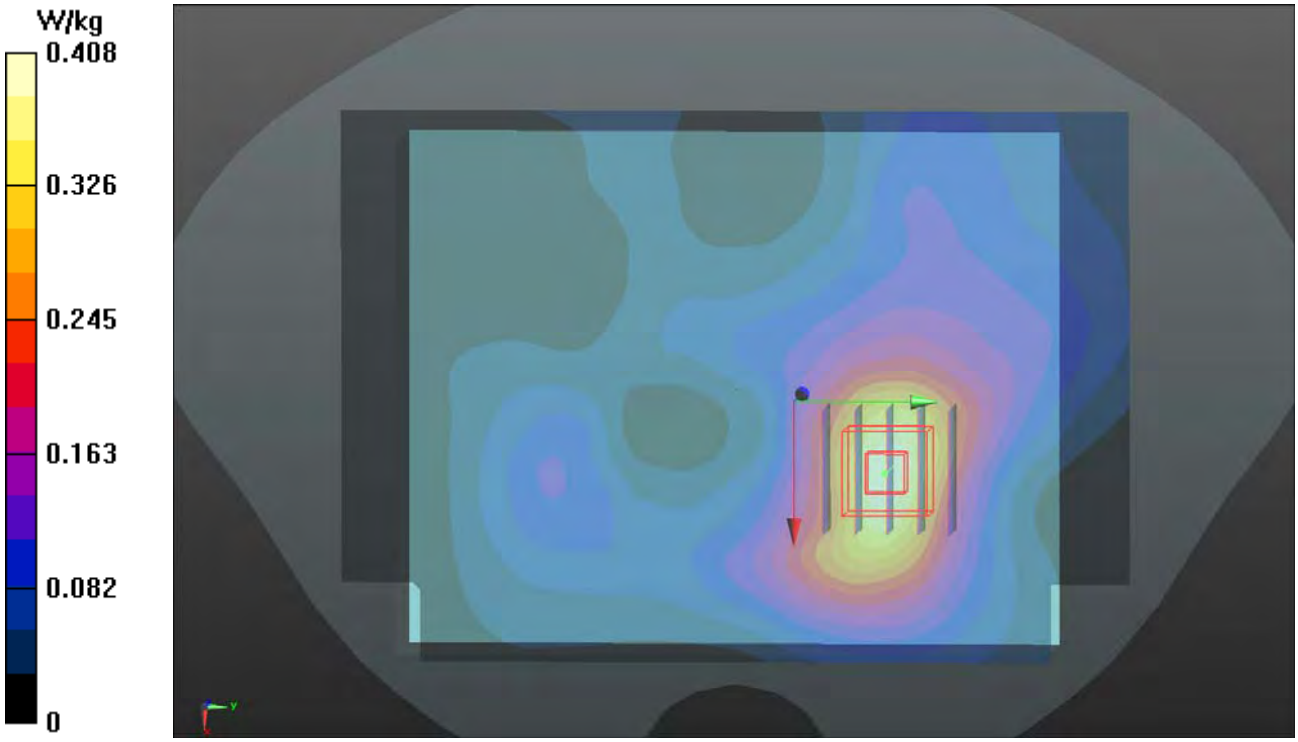

P02 5.3G WLAN_802.11n HT40_Bottom Side_1cm_Ch54_Sample A_Ant Sidecar

DUT: 160805C22

Communication System: WLAN_5G; Frequency: 5270 MHz;Duty Cycle: 1:1
Medium: B34T60N3_0908 Medium parameters used: f = 5270 MHz; σ = 5.446 S/m; ε_r = 47.402; ρ = 1000 kg/m^3
Ambient Temperature：23.7 ℃ ; Liquid Temperature：23.2 ℃

DASY5 Configuration:
- Probe: EX3DV4 - SN3650; ConvF(4.9, 4.9, 4.9); Calibrated: 2016/07/25;
- Sensor-Surface: 1.4mm (Mechanical Surface Detection)
- Electronics: DAE4 Sn861; Calibrated: 2016/06/16
- Phantom: Twin SAM Phantom_1653; Type: QD000P40;
- Measurement SW: DASY52, Version 52.8 (8); SEMCAD X Version 14.6.10 (7373)

- Area Scan (141x201x1): Interpolated grid: dx=1.000 mm, dy=1.000 mm
Maximum value of SAR (interpolated) = 0.316 W/kg

- Zoom Scan (6x6x12)/Cube 0: Measurement grid: dx=5mm, dy=5mm, dz=2mm
Reference Value = 1.968 V/m; Power Drift = 0.05 dB
Peak SAR (extrapolated) = 0.579 W/kg
SAR(1 g) = 0.164 W/kg; SAR(10 g) = 0.064 W/kg
Maximum value of SAR (measured) = 0.343 W/kg

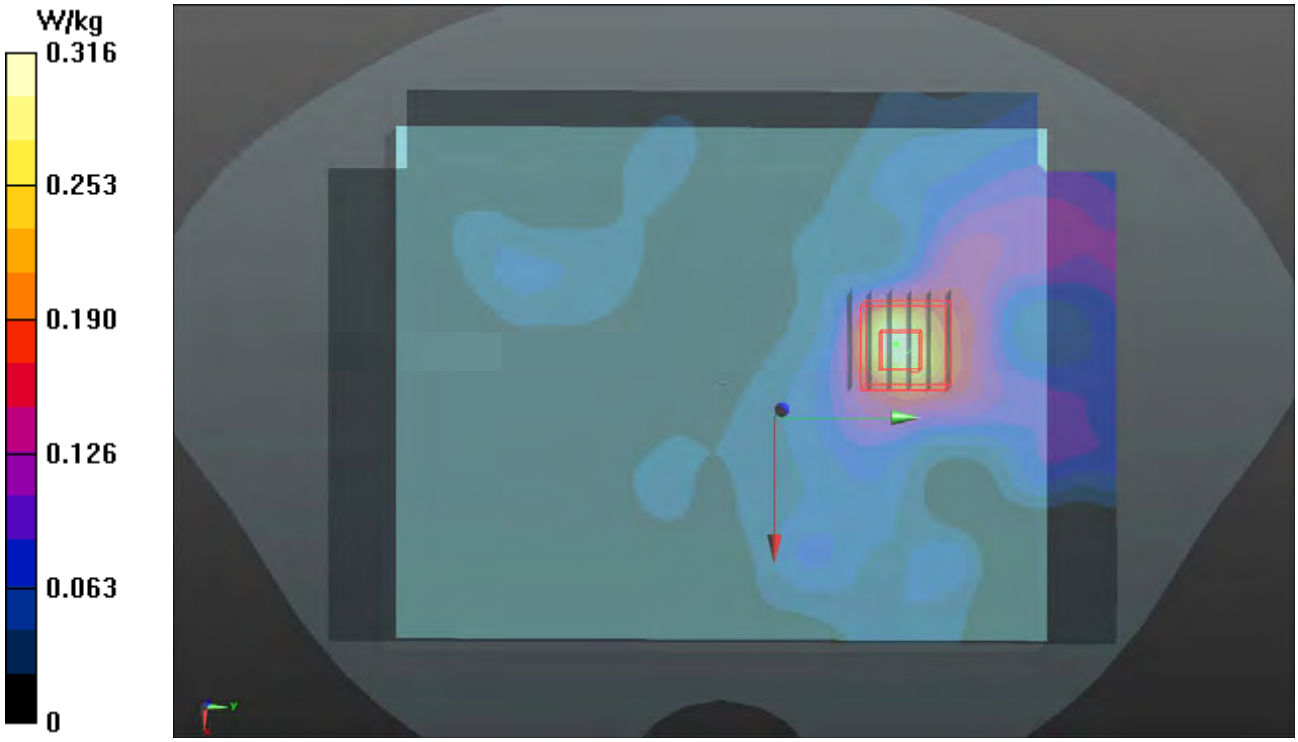

P03 5.6G WLAN_802.11n HT40_Bottom Side_1cm_Ch134_Sample A_Ant Sidecar

DUT: 160805C22

Communication System: WLAN_5G; Frequency: 5670 MHz;Duty Cycle: 1:1
Medium: B34T60N1_0909 Medium parameters used: f = 5670 MHz; σ = 5.998 S/m; ε_r = 46.38; ρ = 1000 kg/m^3
Ambient Temperature：23.7 ℃ ; Liquid Temperature：23.4 ℃

DASY5 Configuration:
- Probe: EX3DV4 - SN3864; ConvF(3.85, 3.85, 3.85); Calibrated: 2016/07/25;
- Sensor-Surface: 1.4mm (Mechanical Surface Detection)
- Electronics: DAE4 Sn1431; Calibrated: 2016/03/21
- Phantom: Twin SAM Phantom_1822; Type: QD000P40;
- Measurement SW: DASY52, Version 52.8 (8); SEMCAD X Version 14.6.10 (7373)

- Area Scan (141x201x1): Interpolated grid: dx=1.000 mm, dy=1.000 mm
Maximum value of SAR (interpolated) = 0.364 W/kg

- Zoom Scan (6x6x12)/Cube 0: Measurement grid: dx=5mm, dy=5mm, dz=2mm
Reference Value = 1.996 V/m; Power Drift = 0.08 dB
Peak SAR (extrapolated) = 0.500 W/kg
SAR(1 g) = 0.096 W/kg; SAR(10 g) = 0.035 W/kg
Maximum value of SAR (measured) = 0.259 W/kg

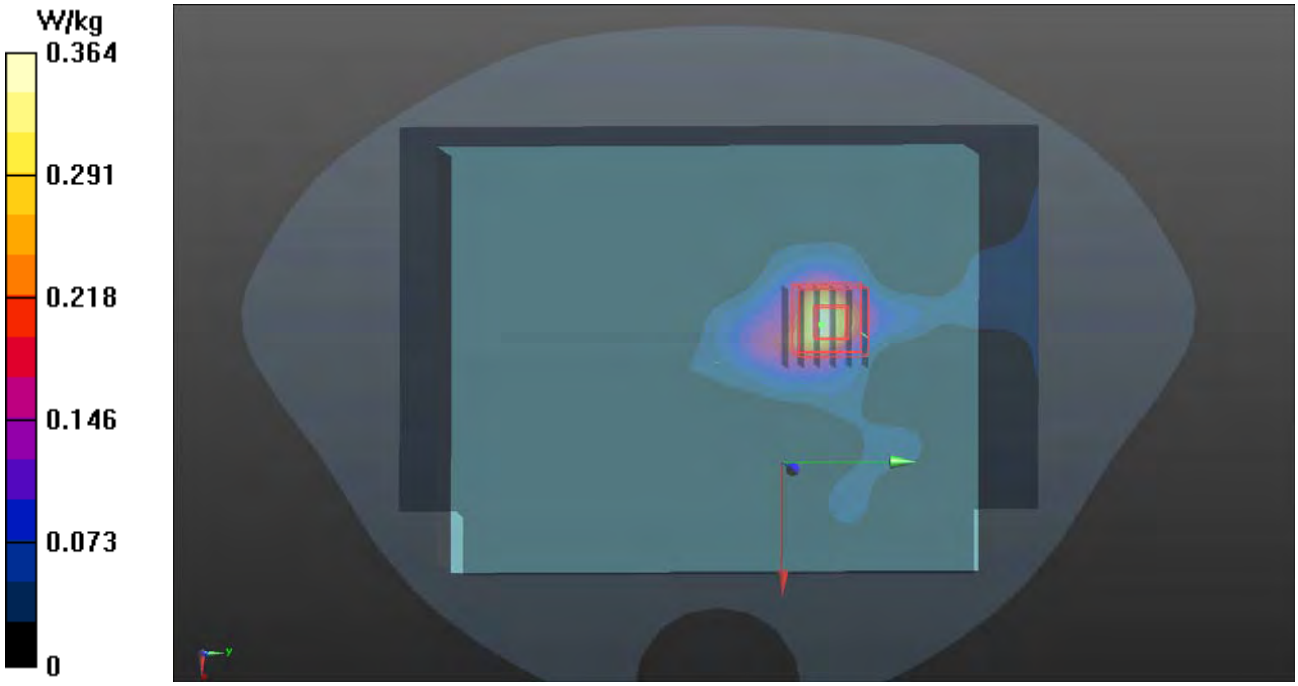

P04 5.8G WLAN_802.11n HT40_Bottom Side_1cm_Ch159_Sample A_Ant Sidecar

DUT: 160805C22

Communication System: WLAN_5G; Frequency: 5795 MHz;Duty Cycle: 1:1
Medium: B34T60N3_0908 Medium parameters used: f = 5795 MHz; σ = 6.183 S/m; ε_r = 46.377; ρ = 1000 kg/m^3
Ambient Temperature：23.7 ℃ ; Liquid Temperature：23.2 ℃

DASY5 Configuration:
- Probe: EX3DV4 - SN3650; ConvF(4.36, 4.36, 4.36); Calibrated: 2016/07/25;
- Sensor-Surface: 1.4mm (Mechanical Surface Detection)
- Electronics: DAE4 Sn861; Calibrated: 2016/06/16
- Phantom: Twin SAM Phantom_1653; Type: QD000P40;
- Measurement SW: DASY52, Version 52.8 (8); SEMCAD X Version 14.6.10 (7373)

- Area Scan (141x201x1): Interpolated grid: dx=1.000 mm, dy=1.000 mm
Maximum value of SAR (interpolated) = 0.259 W/kg

- Zoom Scan (6x6x12)/Cube 0: Measurement grid: dx=5mm, dy=5mm, dz=2mm
Reference Value = 2.501 V/m; Power Drift = 0.04 dB
Peak SAR (extrapolated) = 0.536 W/kg
SAR(1 g) = 0.139 W/kg; SAR(10 g) = 0.055 W/kg
Maximum value of SAR (measured) = 0.311 W/kg

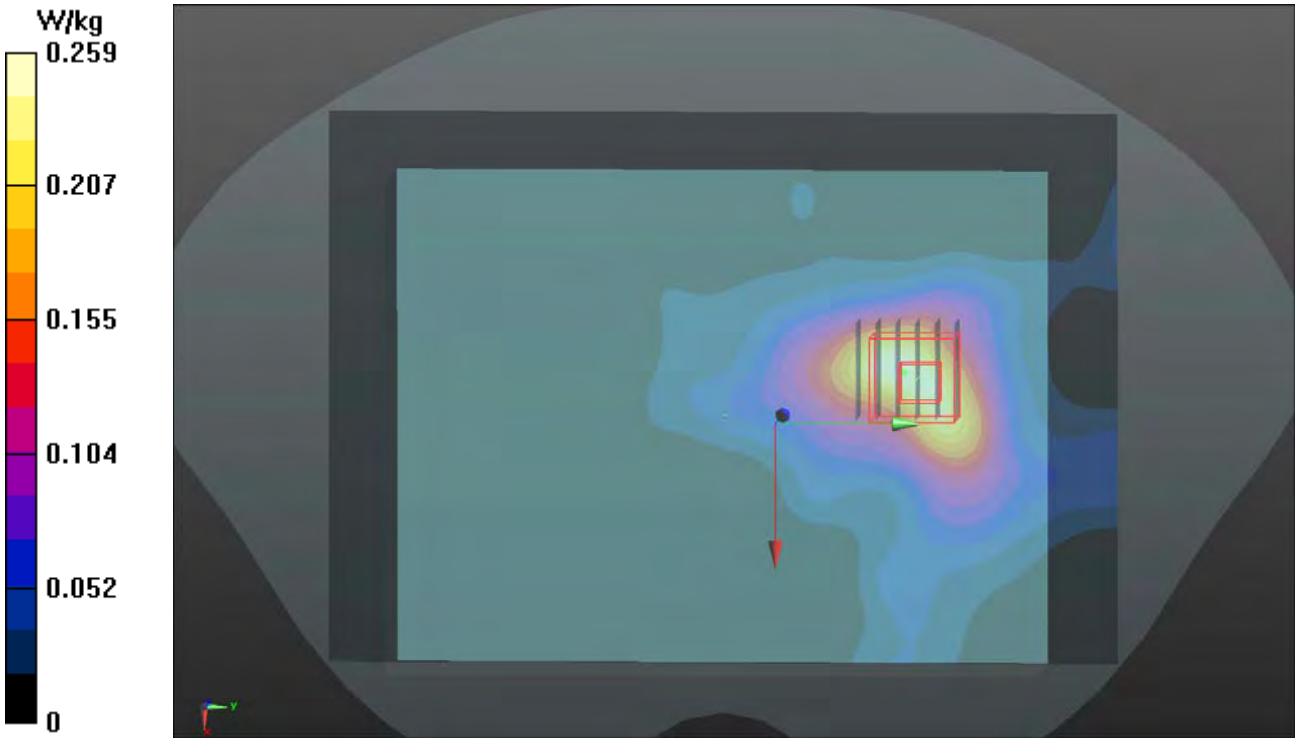

P05 2.4G WLAN_802.11b_Right Side_0cm_Ch6_Sample A_Ant Sidecar

DUT: 160805C22

Communication System: WLAN_2.4G; Frequency: 2437 MHz;Duty Cycle: 1:1
Medium: B19T27N3_0908 Medium parameters used: f = 2437 MHz; σ = 2.026 S/m; ε_r = 52.575; ρ = 1000 kg/m^3
Ambient Temperature：23.9 ℃ ; Liquid Temperature：23.6 ℃

DASY5 Configuration:
- Probe: EX3DV4 - SN3650; ConvF(7.36, 7.36, 7.36); Calibrated: 2016/07/25;
- Sensor-Surface: 1.4mm (Mechanical Surface Detection)
- Electronics: DAE4 Sn861; Calibrated: 2016/06/16
- Phantom: Twin SAM Phantom_1653; Type: QD000P40;
- Measurement SW: DASY52, Version 52.8 (8); SEMCAD X Version 14.6.10 (7373)

- Area Scan (71x141x1): Interpolated grid: dx=1.200 mm, dy=1.200 mm
Maximum value of SAR (interpolated) = 0.968 W/kg

- Zoom Scan (5x5x7)/Cube 0: Measurement grid: dx=8mm, dy=8mm, dz=5mm
Reference Value = 18.30 V/m; Power Drift = 0.10 dB
Peak SAR (extrapolated) = 1.47 W/kg
SAR(1 g) = 0.779 W/kg; SAR(10 g) = 0.385 W/kg
Maximum value of SAR (measured) = 1.19 W/kg

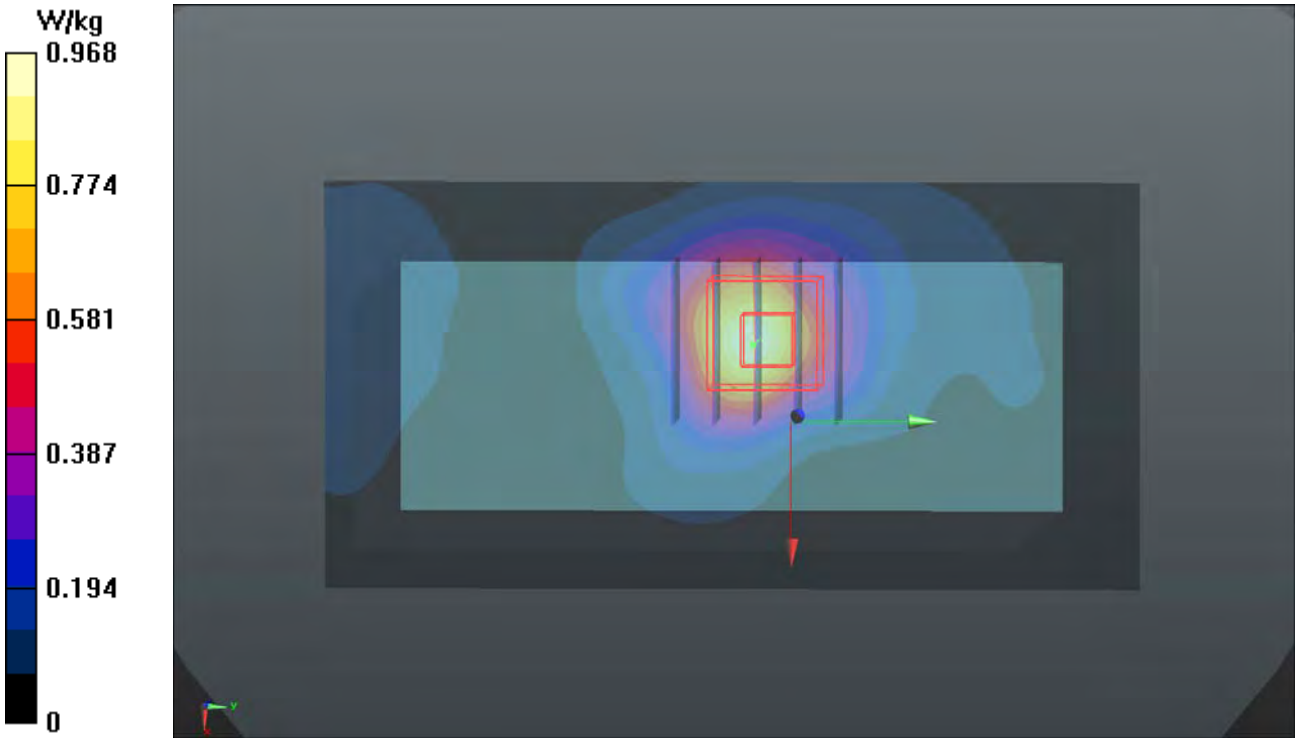

P06 5.3G WLAN_802.11n HT40_Right Side_0cm_Ch54_Sample B_Ant Sidecar

DUT: 160805C22

Communication System: WLAN_5G; Frequency: 5270 MHz;Duty Cycle: 1:1
Medium: B34T60N1_0909 Medium parameters used: f = 5270 MHz; σ = 5.439 S/m; ε_r = 47.216; ρ = 1000 kg/m^3
Ambient Temperature：23.7 ℃ ; Liquid Temperature：23.4 ℃

DASY5 Configuration:
- Probe: EX3DV4 - SN3864; ConvF(4.42, 4.42, 4.42); Calibrated: 2016/07/25;
- Sensor-Surface: 1.4mm (Mechanical Surface Detection)
- Electronics: DAE4 Sn1431; Calibrated: 2016/03/21
- Phantom: Twin SAM Phantom_1822; Type: QD000P40;
- Measurement SW: DASY52, Version 52.8 (8); SEMCAD X Version 14.6.10 (7373)

- Area Scan (81x161x1): Interpolated grid: dx=1.000 mm, dy=1.000 mm
Maximum value of SAR (interpolated) = 1.64 W/kg

- Zoom Scan (6x6x12)/Cube 0: Measurement grid: dx=5mm, dy=5mm, dz=2mm
Reference Value = 12.21 V/m; Power Drift = -0.03 dB
Peak SAR (extrapolated) = 2.40 W/kg
SAR(1 g) = 0.727 W/kg; SAR(10 g) = 0.298 W/kg
Maximum value of SAR (measured) = 1.55 W/kg

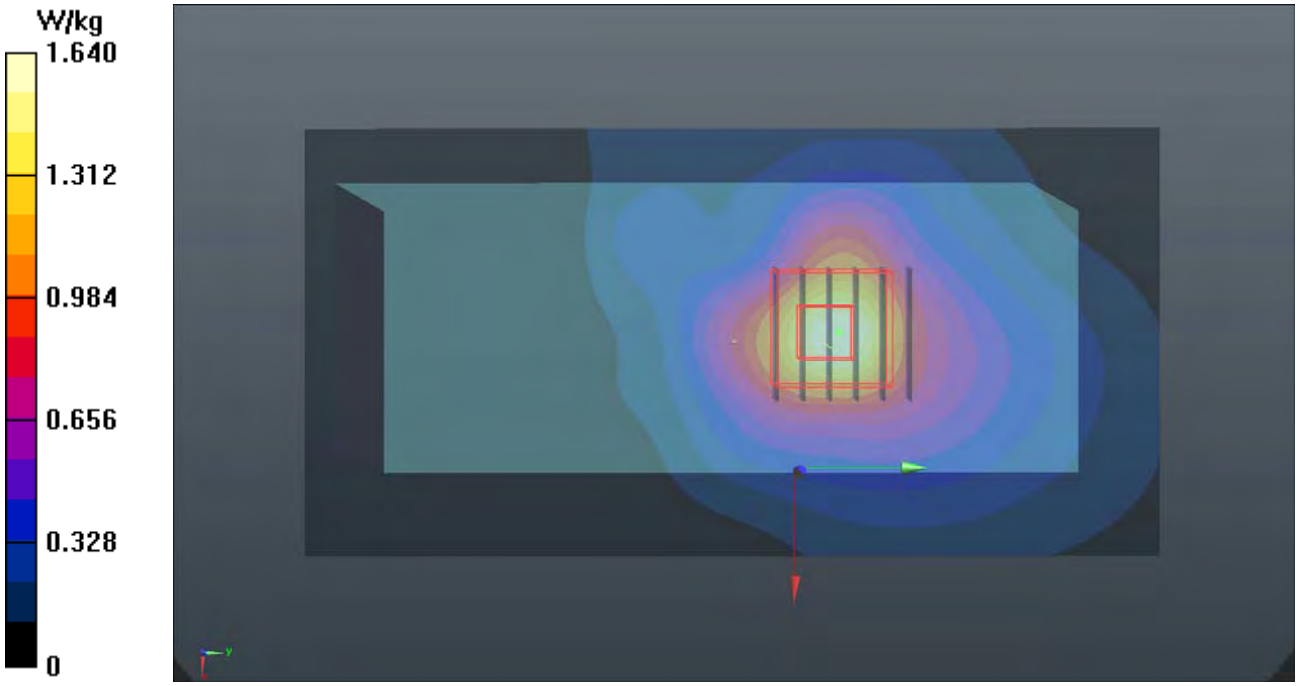

P07 5.6G WLAN_802.11n HT40_Right Side_0cm_Ch134_Sample A_Ant Sidecar

DUT: 160805C22

Communication System: WLAN_5G; Frequency: 5670 MHz;Duty Cycle: 1:1
Medium: B34T60N1_0909 Medium parameters used: f = 5670 MHz; σ = 5.998 S/m; ε_r = 46.38; ρ = 1000 kg/m^3
Ambient Temperature：23.7 ℃ ; Liquid Temperature：23.4 ℃

DASY5 Configuration:
- Probe: EX3DV4 - SN3864; ConvF(3.85, 3.85, 3.85); Calibrated: 2016/07/25;
- Sensor-Surface: 1.4mm (Mechanical Surface Detection)
- Electronics: DAE4 Sn1431; Calibrated: 2016/03/21
- Phantom: Twin SAM Phantom_1822; Type: QD000P40;
- Measurement SW: DASY52, Version 52.8 (8); SEMCAD X Version 14.6.10 (7373)

- Area Scan (81x161x1): Interpolated grid: dx=1.000 mm, dy=1.000 mm
Maximum value of SAR (interpolated) = 1.29 W/kg

- Zoom Scan (6x6x12)/Cube 0: Measurement grid: dx=5mm, dy=5mm, dz=2mm
Reference Value = 13.01 V/m; Power Drift = 0.07 dB
Peak SAR (extrapolated) = 1.90 W/kg
SAR(1 g) = 0.481 W/kg; SAR(10 g) = 0.164 W/kg
Maximum value of SAR (measured) = 1.11 W/kg

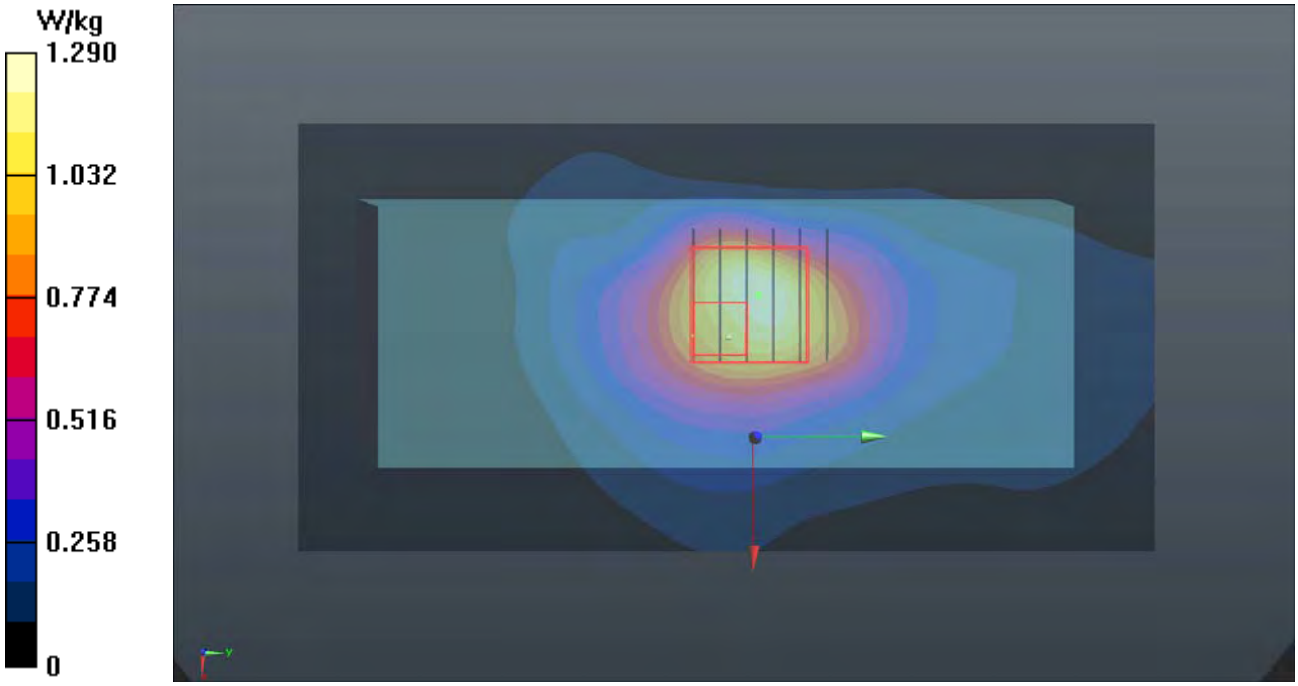

P08 5.8G WLAN_802.11n HT40_Right Side_0cm_Ch159_Sample B_Ant Sidecar

DUT: 160805C22

Communication System: WLAN_5G; Frequency: 5795 MHz;Duty Cycle: 1:1
Medium: B34T60N1_0910 Medium parameters used: f = 5795 MHz; σ = 6.068 S/m; ε_r = 48.241; ρ = 1000 kg/m^3
Ambient Temperature：23.9 ℃ ; Liquid Temperature：23.5 ℃

DASY5 Configuration:
- Probe: EX3DV4 - SN3971; ConvF(3.9, 3.9, 3.9); Calibrated: 2016/03/23;
- Sensor-Surface: 1.4mm (Mechanical Surface Detection)
- Electronics: DAE3 Sn393; Calibrated: 2016/01/12
- Phantom: Twin SAM Phantom_1485; Type: QD000P40;
- Measurement SW: DASY52, Version 52.8 (8); SEMCAD X Version 14.6.10 (7373)

- Area Scan (81x181x1): Interpolated grid: dx=1.000 mm, dy=1.000 mm
Maximum value of SAR (interpolated) = 1.20 W/kg
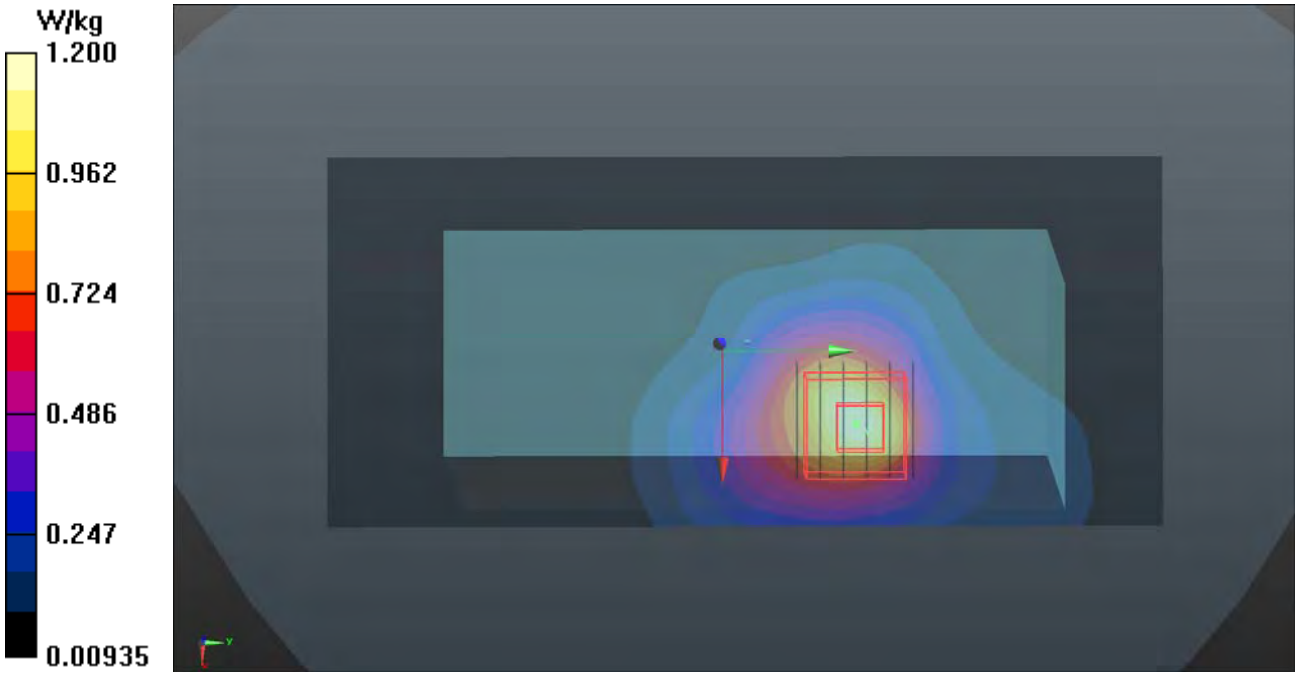
- Zoom Scan (6x6x12)/Cube 0: Measurement grid: dx=5mm, dy=5mm, dz=2mm
Reference Value = 7.723 V/m; Power Drift = 0.02 dB
Peak SAR (extrapolated) = 1.74 W/kg
SAR(1 g) = 0.469 W/kg; SAR(10 g) = 0.182 W/kg
Maximum value of SAR (measured) = 1.03 W/kg