REVISIONS			
REV.	DESCRIPTION	DATE	APPROVED
A	ECO 4698	3-31-05	EJS
B	ECO 4739	6-28-05	EJS
C	ECO 4748	7-15-05	EJS

NOTES:

1. REFER TO PROCESS INSTRUCTION (LISTED ON BOM) FOR DETAILED ASSY AND TEST INFORMATION.
2. SOLDER BATTERY LEADS, CHARGING CONTACTS (ITEM 35), AND COIL WIRES TO PCB PER SHT 2.
3. INSTALL TIP SWITCH (ITEM 20) IN INNER HOUSING (ITEM 33). NOTE THAT THE DIELECTRIC COVERS THE SILVER TRACES FORWAD OF THE SCREW HOLE IN THIS VIEW.
4. INSTALL RETAINING CLIP (ITEM 37).
5. ATTACH PCB TO INNER HOUSING WITH SCREW AND WASHER TORQUE TO 1.5 LB-IN ±.5 LB-IN
6. INSTALL ACTUATOR TIP (ITEM 39) IN TIP HOLDER (ITEM 34), AND INSTALL IN INNER HOUSING
7. PRESS COIL INTO INNER HOUSING
8. ROUTE AND TAPE COIL WIRES AS SHOWN USING .002 THK TAPE
9. INSTALL SPACER (ITEM 40)
10. INSERT SUB ASSEMBY INTO PEN HOUSING (ITEM 30) UNTIL THE LATCH ON THE INNER HOUSING ENGAGES. THE BATTERY NEG WIRE MUST RESIDE IN THE GROOVE IN THE HOUSING.
11. INSTALL THE END CAP (ITEM 31) BY SNAPING IT INTO PLACE
12. INSTALL SPRING PIN (ITEM 103) IN HOLE IN PEN HOUSING. FLUSH TO .010 SUB-FLUSH
13. INSTALL THE SIDE BUTTON (ITEM 32) BY SNAPPING IT INTO PLACE
14. INSTALL THE TIP (ITEM 36)
15. APPLY FCC LABEL (ITEM 21) AS SHOWN TO BOTTOM OF PEN

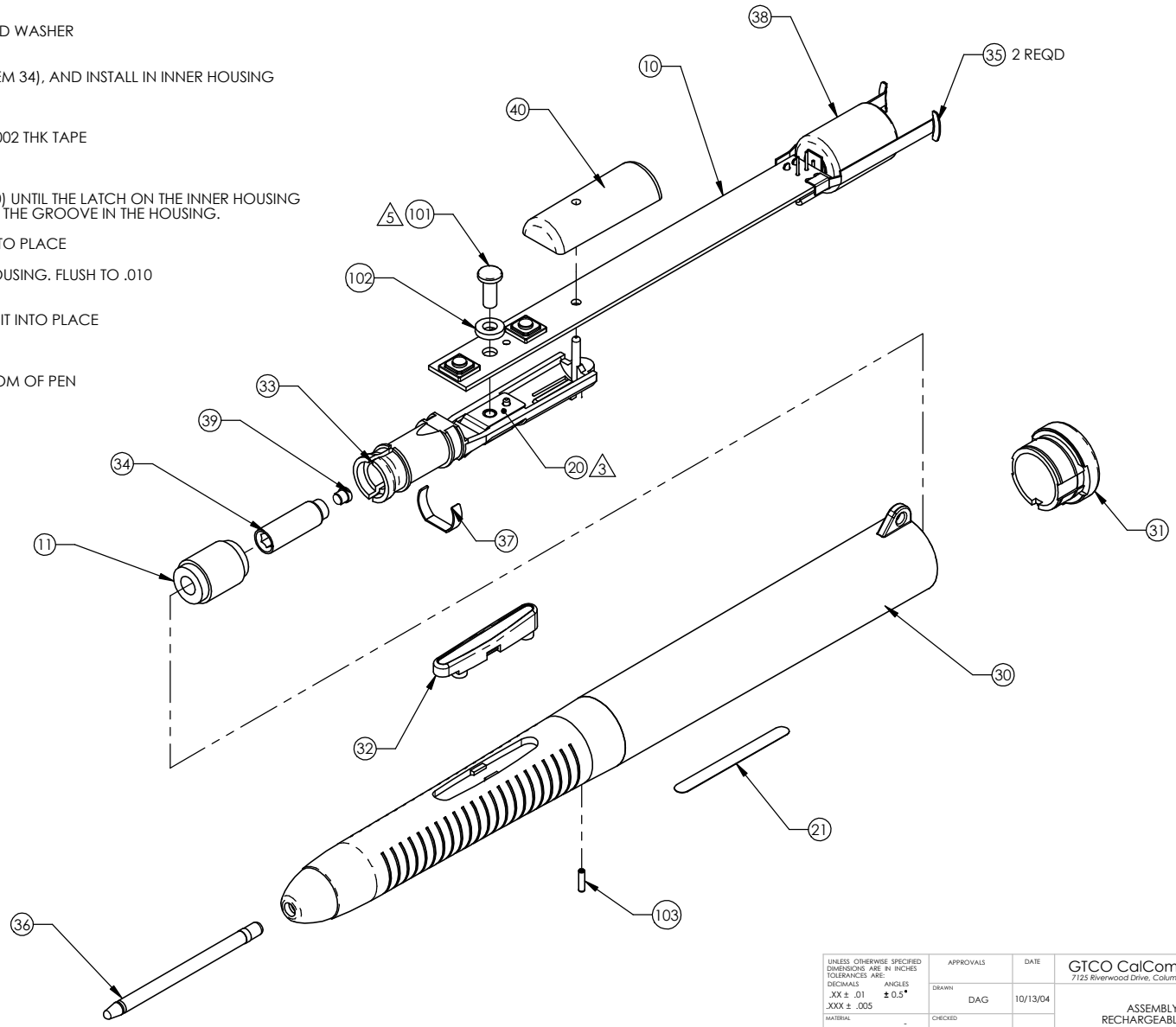

PROPRIETARY AND CONFIDENTIAL
THE INFORMATION CONTAINED IN THIS DRAWING IS THE SOLE PROPERTY OF GTCOCALCOMP. ANY REPRODUCTION IN PART OR AS A WHOLE WITHOUT THE WRITTEN PERMISSION OF GTCOCALCOMP IS PROHIBITED

UNLESS OTHERWISE SPECIFIED DIMENSIONS ARE IN INCHES TOLERANCES ARE:
DECIMALS .XX ± .01 .XXX ± .005
ANGLES ± 0.5°

MATERIAL -
FINISH -
DO NOT SCALE DRAWING

APPROVALS	DATE
DRAWN DAG	10/13/04
CHECKED -	-
ISSUED -	-

GTCO CalComp
7125 Riverwood Drive, Columbia MD 21046

ASSEMBLY, RECHARGEABLE PEN

SIZE C | DWG. NO. 11-00670 | REV. C
SCALE NONE | MODEL FILE: mp3 pen 3.7! | SHEET 1 OF 2

REVISIONS			
REV.	DESCRIPTION	DATE	APPROVED
.	.	.	.

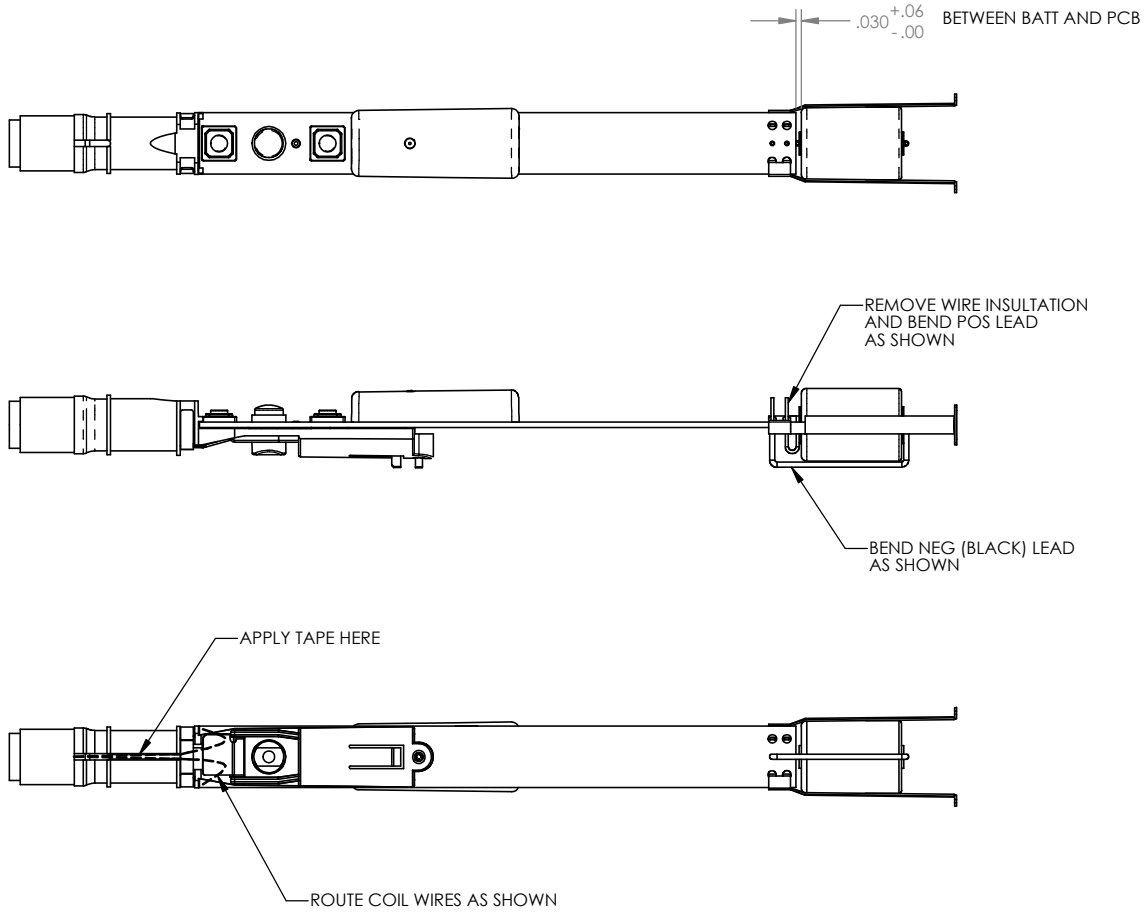

PROPRIETARY AND CONFIDENTIAL

THE INFORMATION CONTAINED IN THIS DRAWING IS THE SOLE PROPERTY OF GTCOCALCOMP. ANY REPRODUCTION IN PART OR AS A WHOLE WITHOUT THE WRITTEN PERMISSION OF GTCOCALCOMP IS PROHIBITED

UNLESS OTHERWISE SPECIFIED DIMENSIONS ARE IN INCHES
TOLERANCES ARE:
DECIMALS .XX ± .01 .XXX ± .005
ANGLES ± 0.5°

MATERIAL -

FINISH -

DO NOT SCALE DRAWING

APPROVALS		DATE
DRAWN	DAG	11/19/04
CHECKED	.	.
ISSUED	.	.

GTCO CalComp
7125 Riverwood Drive, Columbia MD 21046

ASSEMBLY, RECHARGEABLE PEN

SIZE C | DWG. NO. 11-00670 | REV. C

SCALE NONE | MODEL FILE: mp3 pen 3.71 | SHEET 2 OF 2