9078 plus
9078D plus

User Manual

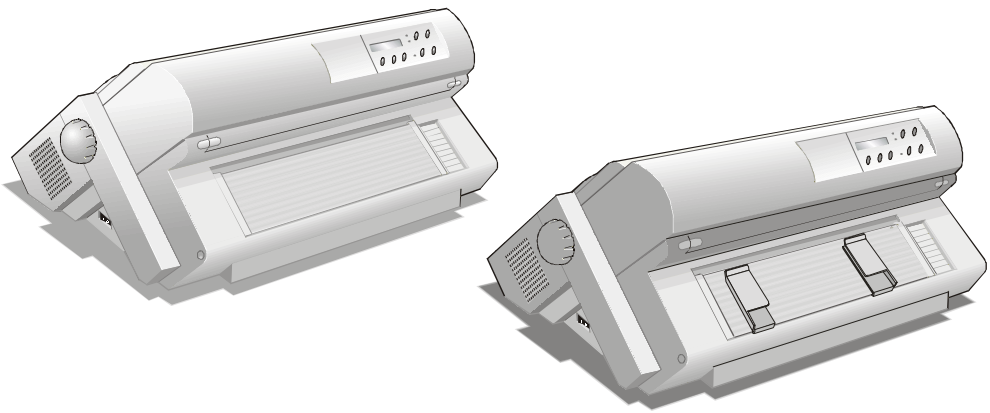

Compuprint

Rev. 001

Compuprint Information

Thanks *for choosing the* 9078/78D plus *printer.*

Your printer is a reliable working equipment that will be very useful in your daily job.

Our printers have been designed to be compact and respectful of the work environment. They offer a wide range of features and multiple functions that confirm the high technological level reached by the Compuprint *S.p.A.*

To maintain these printing performances unchanged in the long run, Compuprint *has developed specific consumable accessories for each printer type (for example: ribbon cartridges for dot matrix printers, toner and OPC cartridges for laser printers, bubble ink jet cartridges for inkjet printers) that assure an excellent operation with high printing quality level reliability.*

Compuprint *recommends to use only its* ***original consumables with original packaging (identified by its holographic label).*** *In this way, a proper use of the printer at quality level stated in the product characteristics can be assured. All typical usage problems related to not certified consumables may be avoided, such as an overall quality print level degradation and, often, the reduction of the product life due to the fact that the proper working conditions for the print heads, OPC cartridge and other printer parts are not assured.*

Moreover, Compuprint *does not only certify its consumables in terms of working conditions but also carefully controls their compliance with the international standard rules concerning:*

- *no cancerous materials;*
- *no flammability of the plastic materials;*
- *other standards*

Compuprint *advises the customers not to use products for which the compliance to this safety rules are not warranted.*

Finally seek your dealer or contact a Compuprint *office and be sure that are provided you the original* Compuprint *consumables.*

Compliance Statements

FCC Compliance Statement (USA)

This equipment complies with Part 15 of the FCC Rules. Operation is subject to the following two conditions: (1) This device may not cause harmful interference, and (2) this device must accept any interference received, including interference that may cause undesired operation. If this equipment does cause harmful interference to radio or television reception, which can be determined by turning the equipment off and on, the user is encouraged to try to correct the interference by one or more of the following measures:

- Reorient or relocate the receiving antenna.
- Increase the separation between the equipment and receiver.
- Connect the equipment to an outlet on a circuit different from that to which the receiver in connected.
- Consult the dealer or an experienced radio/TV technician for help.

FCC Warning
Changes or modifications not expressly approved by the party responsible for compliance could void the user's authority to operate the equipment.

Note the following:

- The use of a non-shielded interface cable with the referenced device is prohibited.
- The length of the parallel interface cable must be 3 meters (10 feet) or less.
- The length of the serial interface cable must be 15 meters (50 feet) or less.
- The length of the power cord must be 3 meters (10 feet) or less.

Compliance Statement (Canada)

This digital apparatus is in conformity with standard NMB-003 of Canada.
Cet appareil numérique est conforme à la norme NMB-003 du Canada.

Übereinstimmungserklärung (Deutschland)

Bescheinigung des Herstellers/Importeurs:
Hiermit wird bescheinigt, dass der Drucker der Maschinenlärminformationsverordnung 3. GSGV, 18.01.1991 entspricht: Der höchste Schalldruckpegel beträgt 70 dB (A) oder weniger gemäß EN27779-1991.

Compliance Statement (Europe)

Warning
This product meets the interference requirements of EN55022. In a domestic environment, this product may cause radio interference in which case, the user may be required to take adequate measures.

Energy Star

As an ENERGY STAR® Partner, COMPUPRINT has determined that this product meets the ENERGY STAR® guidelines for energy efficiency. The International ENERGY STAR® Office Equipment Program is an international program that promotes energy saving through the use of computers and other office equipment. The program backs the development and dissemination of the products with functions that effectively reduce energy consumption. It is an open system in which business proprietors can participate voluntarily. The targeted products are office equipment such as computers, displays, printers, facsimiles and copiers. Their standards and logos are uniform among participating nations.

International Compliance

EN55022:1998	Emissions Series	
EN 61000-3-2:1995	Power line harmonics	
EN 61000-3-3:1995	Power line flicker	
EN55024:1998	Immunity Characteristics	
EN61000-4-2:1995	E.S.D.	
EN61000-4-3:1995	Radiated Susceptibility	
EN61000-4-4:1995	E.F.T	
EN61000-4-5:1995	Surge	
EN61000-4-6:1996	R.F. Common mode	
EN61000-4-11:1994	Voltage dips and interruptions	

Safety Information

A. Never remove any printer cover unless it is necessary for the installation of a printer accessory and expressly described in this manual.

B. Please retain the printer covers in a safe place because they should be reinstalled if you decide to remove any printer accessory.

The following areas of the printer should be covered for safety reasons:

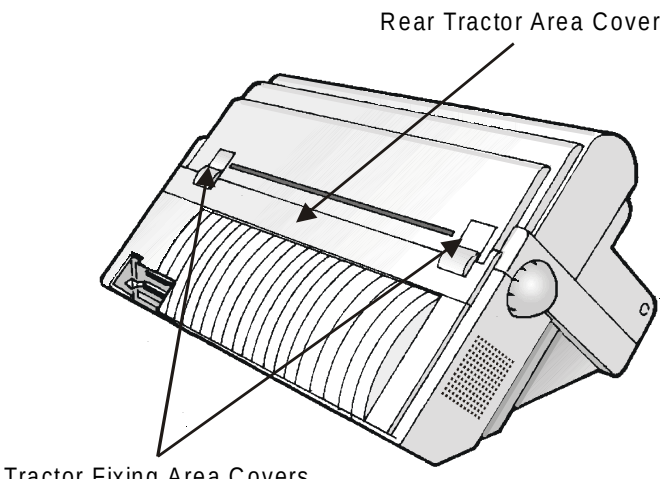

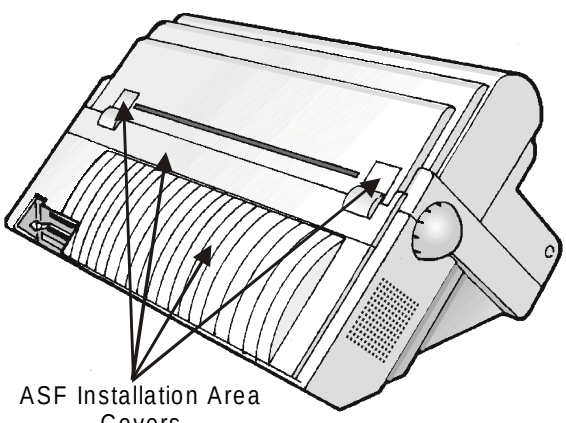

The above openings must always be protected with their cover when the corresponding option is not installed. Do not touch inside and do not insert any object into these openings or into the gears.

Table of Contents

Safety Information iii
Table of Contents iv
Getting to Know Your Printer 1
Printer Features 1
Unpacking Your Printer 2
Printer Parts 3
Front View 3
Rear View 5
Setting Up Your Printer 6
Choosing a Suitable Location 6
Printer Assembly 7
Removal of the Shipment Locks 7
Ribbon Cartridge Installation 8
Upper Push Tractor Installation (9078D plus model only) 13
Host Computer Connection 15
Software Driver Selection 16
Power Connection 17
Selecting the Display Language 19
Configuring the Printer 20
Operator Panel Presentation 20
Display Messages 21
Indicators 25
Function Keys 26
Printer Setups 31
Entering the Printer Setups 31
Moving within the Printer Setups 31
Leaving the Printer Setups 32
Power-On Configuration 33
Entering the Power-On Configuration 33
Program Setup 65
Entering the Program Setup 65
How to Select the Paper Path 89
How to Use the Tear-Off Function 90
Selection of the Paper Size 90
Adjusting the Tear-Off Position 91
Selection of the Tear-Off Mode 92
How to Lock/Unlock the Access to the Printer Setups 93
How to Handle the Paper Parking 94
Paper Handling 99
Paper Paths 99
Paper Specifications 100
Fanfold Paper (9078 plus and 9078D plus models) 100
Envelopes (9078 plus model only) 100
Cut Sheets (9078 plus model only) 101
Cut Sheets 102
Cut Sheets Loading Modes 102
Loading Cut Sheets 103
Fanfold Paper 105
Loading Paper Using the Lower Tractor 105
Loading Paper Using the Upper Tractor 112
Loading Paper Using the Lower Push Tractor and the Rear Pull Tractor (option) 117
Printer Maintenance and Troubleshooting 120
Cleaning the Printer 120
Replacing the Ribbon Cartridge 121
Printing the Self Test 122
Error Handling 123

Getting to Know Your Printer

Printer Features

- 24 Needle Print Head
- 136 columns
- Draft printing at 700 cps, LQ printing at 133 cps
- IBM Proprinter XL24E/XL24,Personal Printer 2391+ and EPSON LQ 1050-2550 emulations
- Multiple copies (1 original and 7 copies)
- Automatic paper path selection
- Easy operability via operator panel menu and S/W commands
- Optional Automatic Sheet Feeder (120 sheets capability) which handles cut sheets, multicopies and envelopes, accepts up to two additional paper bins and includes paper stacker
- Optional color kit
- Optional cutter
- Usage of all specific features by means of the Specific Software Driver which is applicable to the most popular S/W Packages
- Plug & Play capability for Windows 95/98/2000®
- Bi-directional IEEE 1284 parallel interface and standard serial RS-232/C and RS-422/A interface for the standard printer. A dedicated model is available for the network connections through an integrated Ethernet 10/100 Base-T interface, that coexists with the parallel interface. Both models support the automatic switching between the available interfaces.

Unpacking Your Printer

Together with the *Installation Guide* and the CD-ROM with the *User Manual*, the following items are included in the box:

Notify any damage to your supplier.

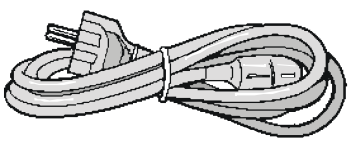

Power Cable

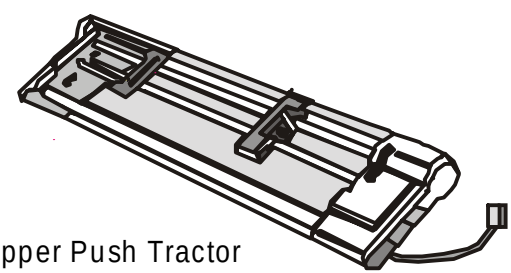

Upper Push Tractor
(9078D plus model only)

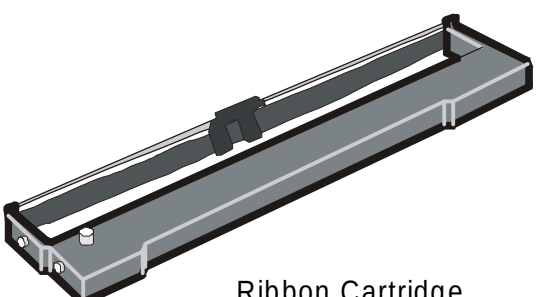

Ribbon Cartridge

Printer Parts

Front View

9078 plus model

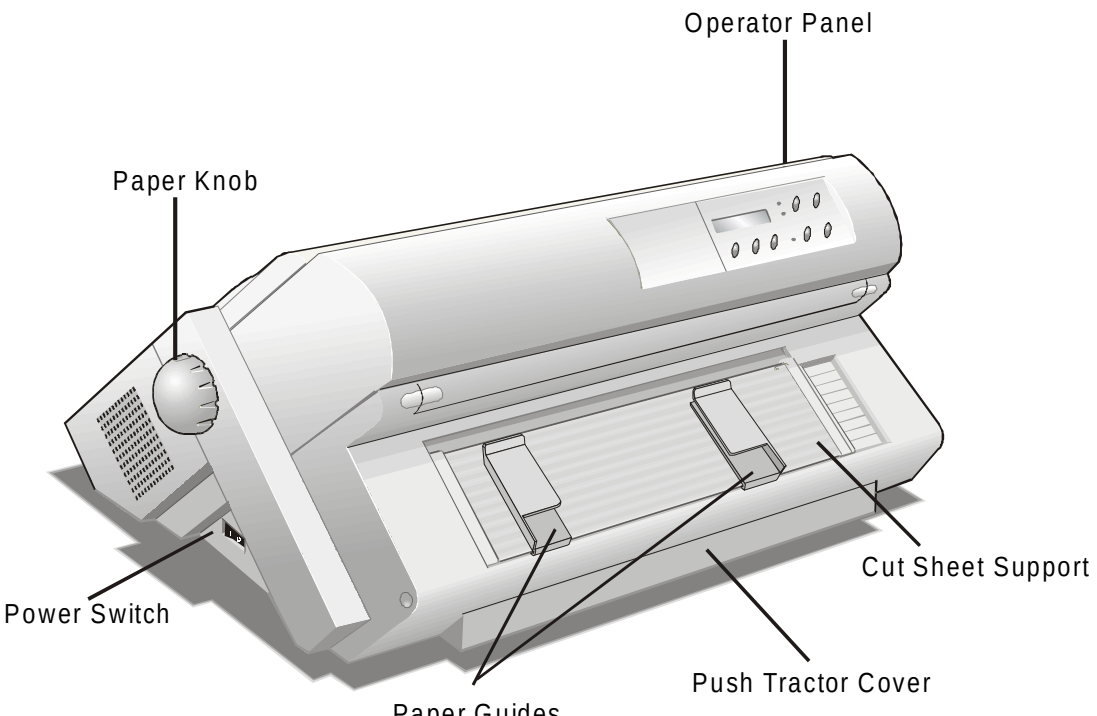

9078D plus model

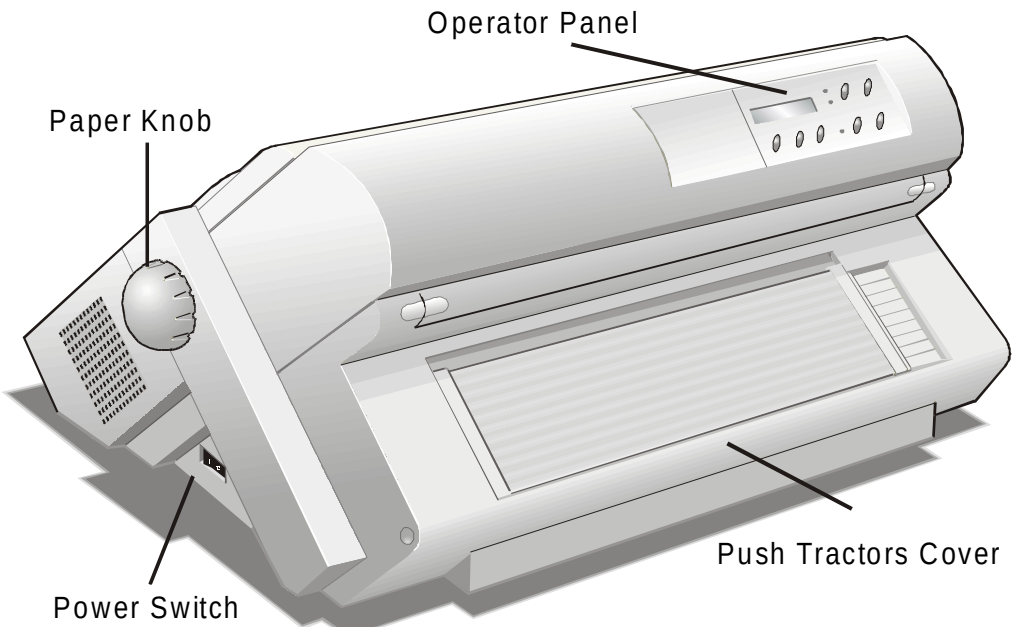

Rear View

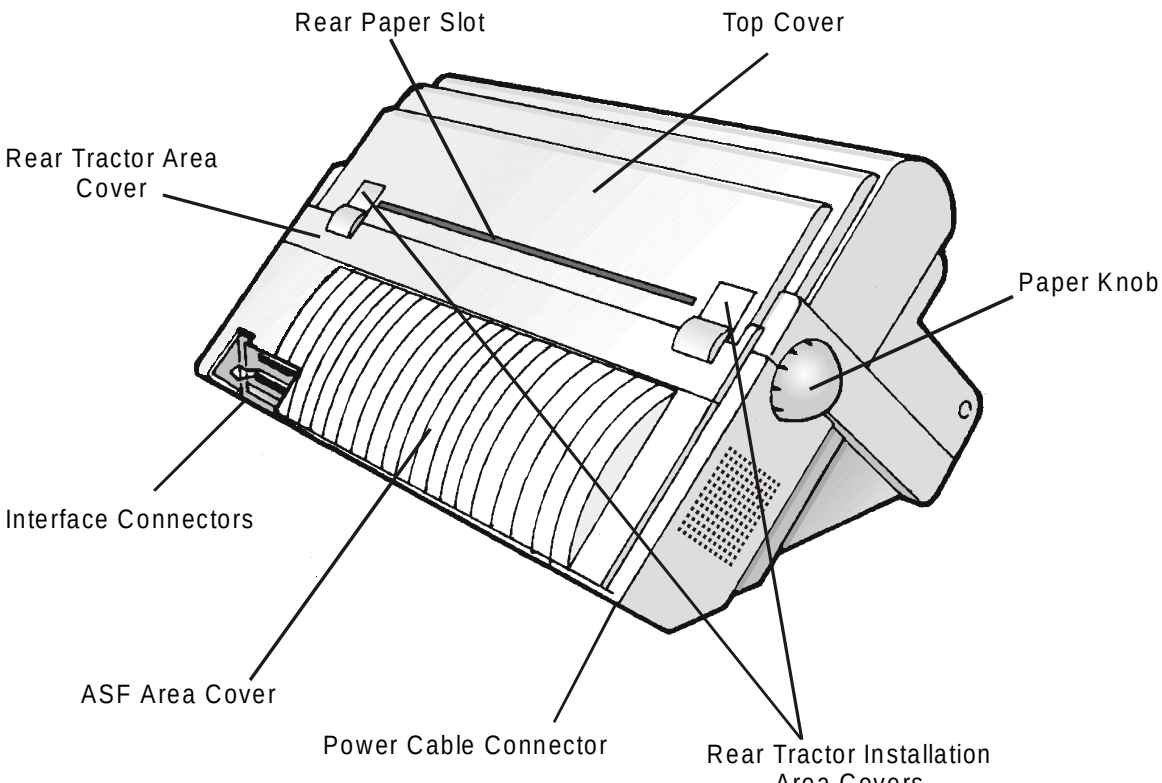
Rear Paper Slot
Top Cover
Rear Tractor Area Cover
Paper Knob
Interface Connectors
ASF Area Cover
Power Cable Connector
Rear Tractor Installation Area Covers

Setting Up Your Printer

Choosing a Suitable Location

Consider the following points when you choose the location for your printer:

- The distance between the printer and the host computer must not exceed the length of the interface cable;
- The location must be sturdy, horizontal and stable;
- Your printer must not be exposed to direct sunlight, extreme heat, cold, dust or humidity (see "Printer Specifications" later);
- You need an AC power outlet compatible with the plug of the printer's power cord. The voltage of the outlet <u>must</u> match the voltage shown on the printer's Rating Plate;

Additionally, you must make sure that when you install the printer in the selected location, there are sufficient clearances on all sides for easy operation. The required space is shown in the figure:

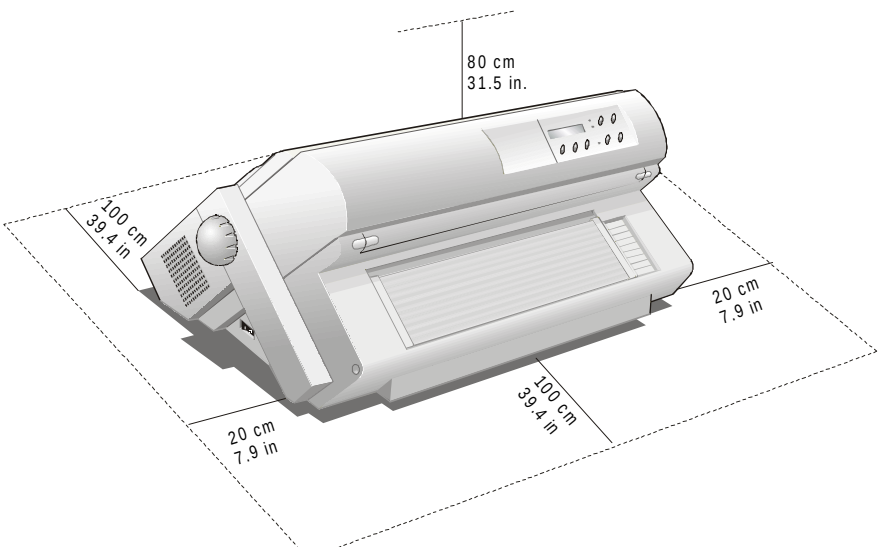

Printer Assembly

Removal of the Shipment Locks

Open all the printer covers and make sure that you remove all the shipment locks from the printer.

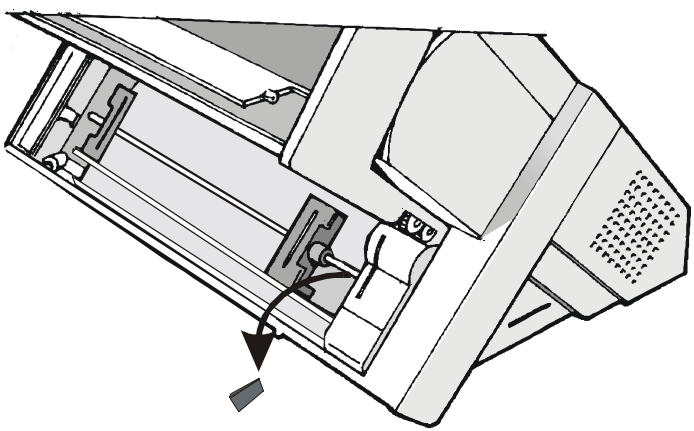

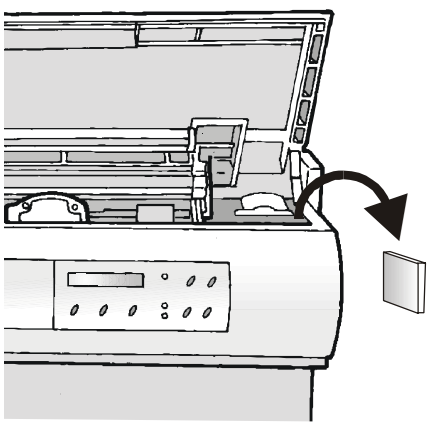

Ribbon Cartridge Installation

Two types of black ribbon cartridges are available for this printer, depending on whether the color kit is installed or not.

Make sure that you are using only Compuprint original consumables.

1. Make sure that the printer is turned off.
2. Find the ribbon cartridge among the accessories.

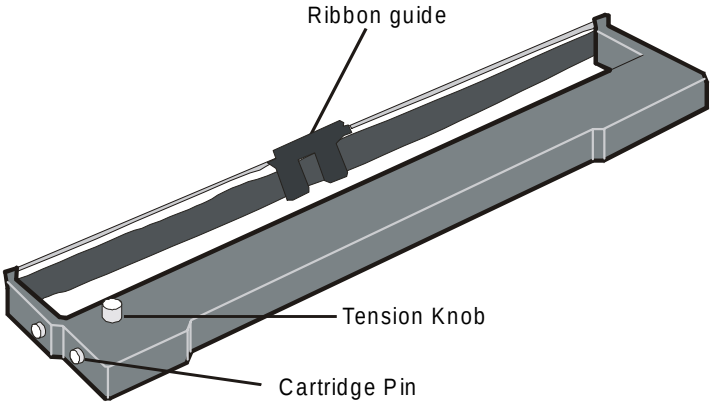

to be used, when the color kit option is not installed

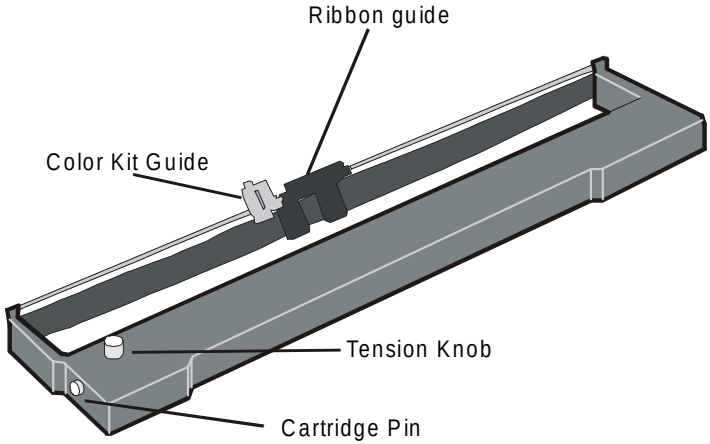

to be used, when the color kit option is installed

3. Open the top cover using the small handles on either side of the top cover.

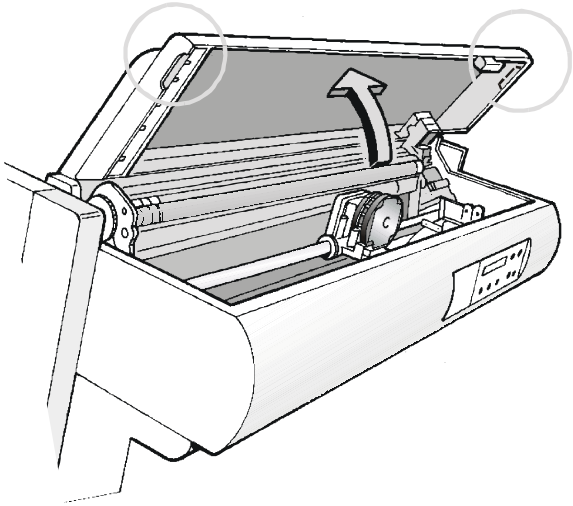

4. Turn the printer on. The print carriage prepares for ribbon cartridge installation.

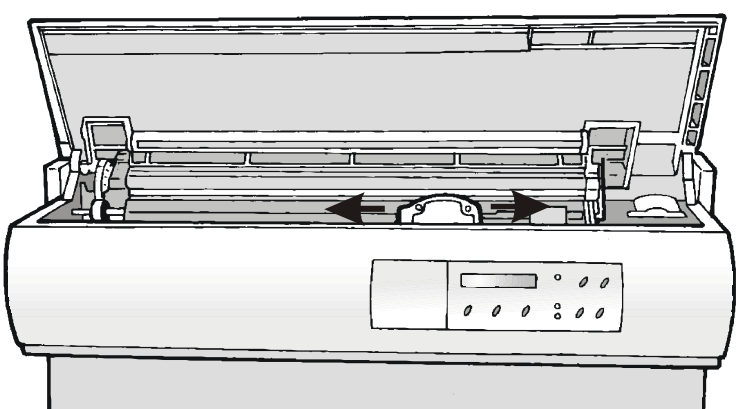

5. Before installing the ribbon cartridge turn the ribbon winding knob in the arrow direction (located on the cartridge) to take up slack in the ribbon.

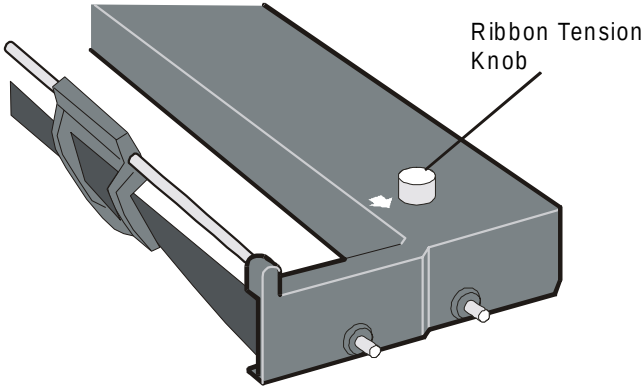

To avoid damage to the ribbon, do not turn the winding knob in the wrong direction.

6. Align the cartridge pins with the locking grooves on the left and right cartridge supports.

The cartridge (black “Long Life” or color) to be used when the color kit is installed has only one groove.

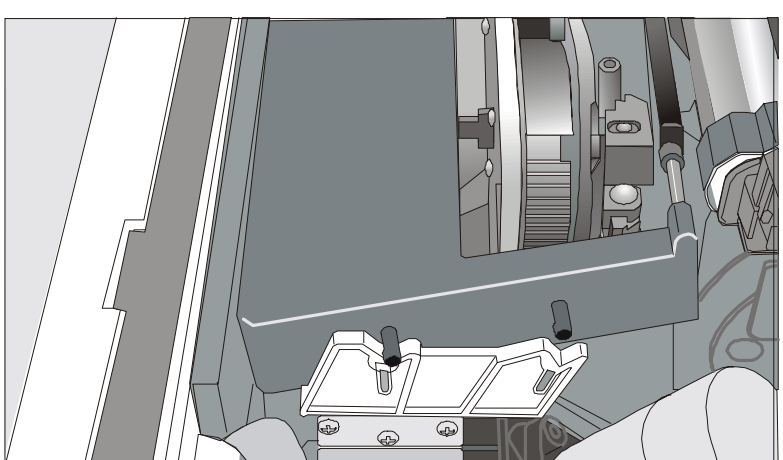

7. Slide and insert the ribbon guide between the print head and the ribbon guide mask holding it perpendicular to the print head.

Make sure that the ribbon is inserted correctly between the print head and the print head mask.

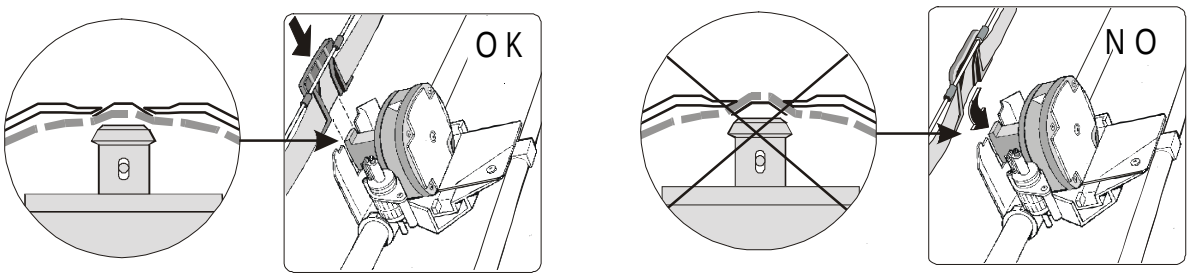

If the color kit option is installed on your printer insert the white plastic holder onto the color kit as shown in the following figure.

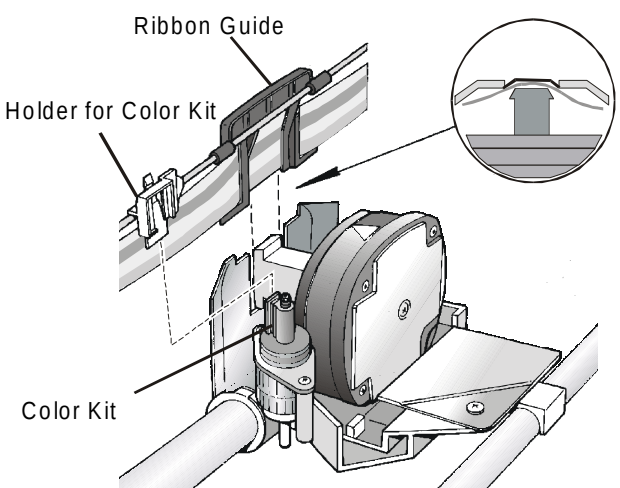

8. Turn the ribbon winding knob in the arrow direction (located on the cartridge) to take up slack in the ribbon.

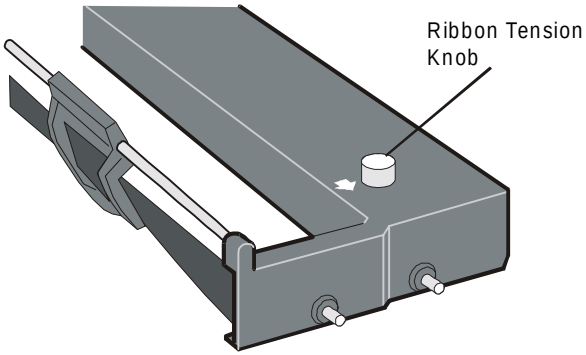

9. Push the cartridge down gently until it clips into place at all four locking points.

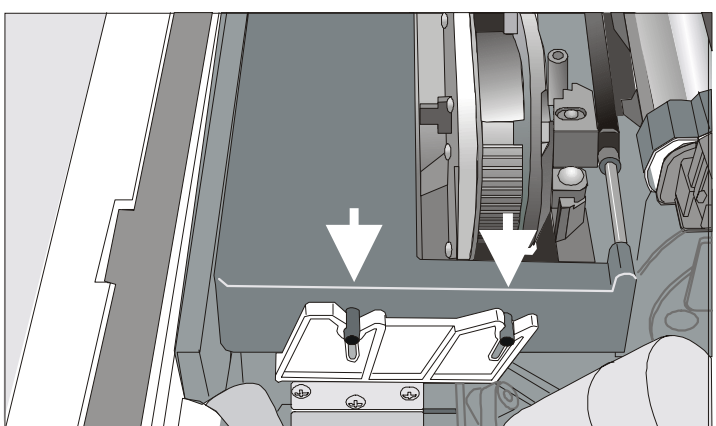

10. Turn the ribbon winding knob again in the direction of the arrow to take up slack in the ribbon.

11. To ensure that the ribbon guide runs freely along the ribbon, manually move the print carriage horizontally.

If you need to replace the used ribbon cartridge, see "Replacing The Ribbon Cartridge", later in this manual.

Upper Push Tractor Installation (9078D plus model only)

An additional push tractor is provided with the 9078D plus printer. This second push tractor unit can be installed in front position (on the lower push tractor).

1. Find the upper push tractor among the accessories.

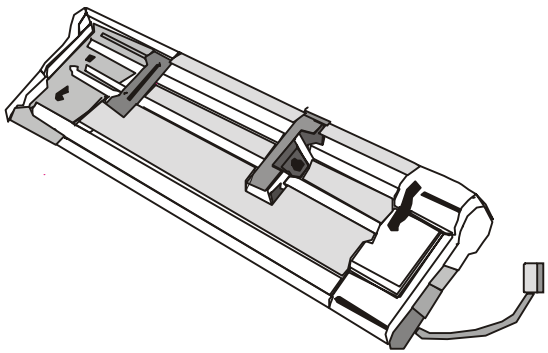

2. Install the upper push tractor aligning both its hooks with the lower push tractor pins and inserting them into the corresponding pins. Push the upper tractor until it is fully engaged. Insert the connector cable in the electrical connector located in the lower push tractor.

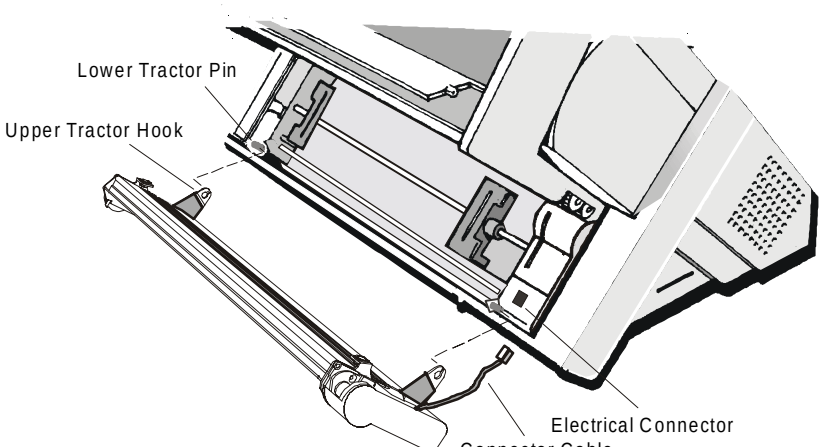

3. The upper push tractor must be installed as shown in figure.

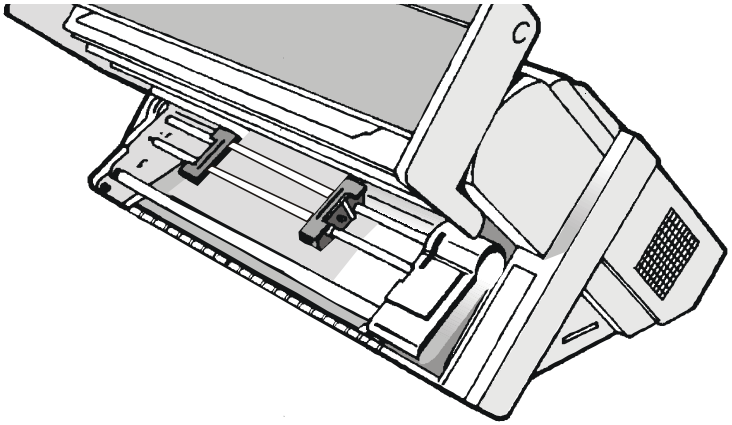

4. If you need to remove the upper push tractor, turn the printer off. Take the connector cable off and press on the push buttons (located in the upper push tractor hooks) to disengage the tractor.

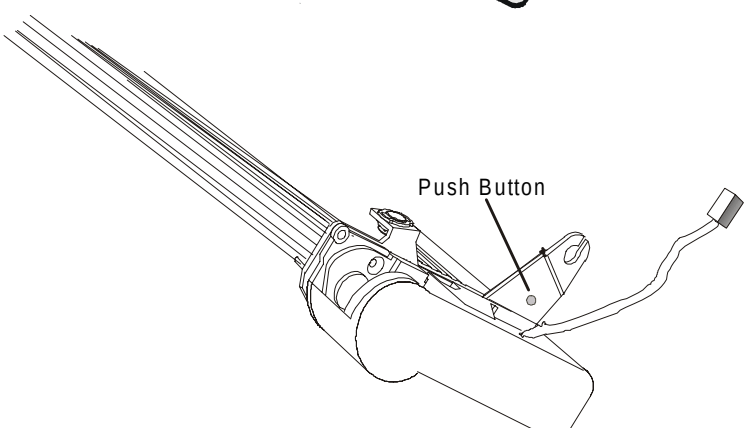

Host Computer Connection

This printer can be connected to your host computer via two available interfaces. The interface connectors are located on the rear of the printer.

- A bidirectional IEEE1284 parallel interface
- A RS-232/C or RS-422/A serial interface

Before connecting the interface cable, make sure that the printer and the host computer are turned OFF .

Insert the *parallel interface cable* into the parallel connector and fasten it by means of the clips.

Insert the *serial interface cable* into the serial connector, and fasten it by means of the two screws (use the screwdriver).

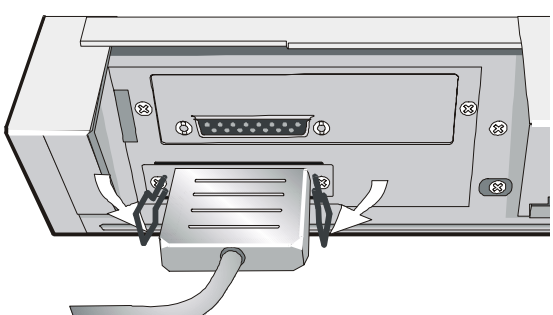

Parallel interface

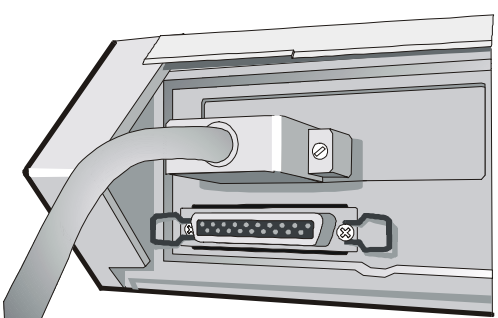

Serial interface

Software Driver Selection

At this point it is necessary to configure your printer for your application package. The installation procedures depend upon the host environment.

Follow the instructions in the *readme* file you find on the CD-ROM.

In a WINDOWS 95/98/2000® environment the printer supports the Plug & Play feature.

The printer drivers of all Compuprint printers can be found at the Internet Address http://www.compuprint.net/driver

Power Connection

Make sure that the power outlet matches the power rating of the printer. See the name plate of the printer, that you find under the rear ASF cover.

In case the power rating does not correspond DO NOT CONNECT THE PRINTER TO THE MAINS. Consult your dealer for help.

1. Make sure the power outlet is near the printer location and easily accessible.

Always use a grounded outlet.

2. Make sure that the power switch is in *0 position* (OFF).

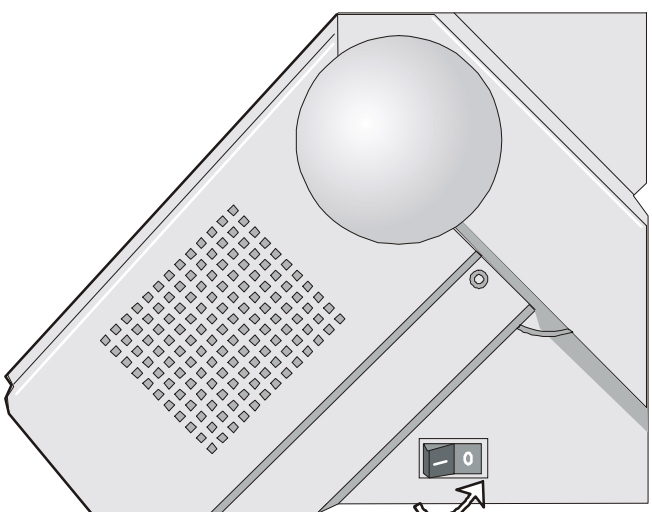

3. Insert the power cable plug into the printer connector and the other power cable end into a convenient outlet (the figure shows the European version).

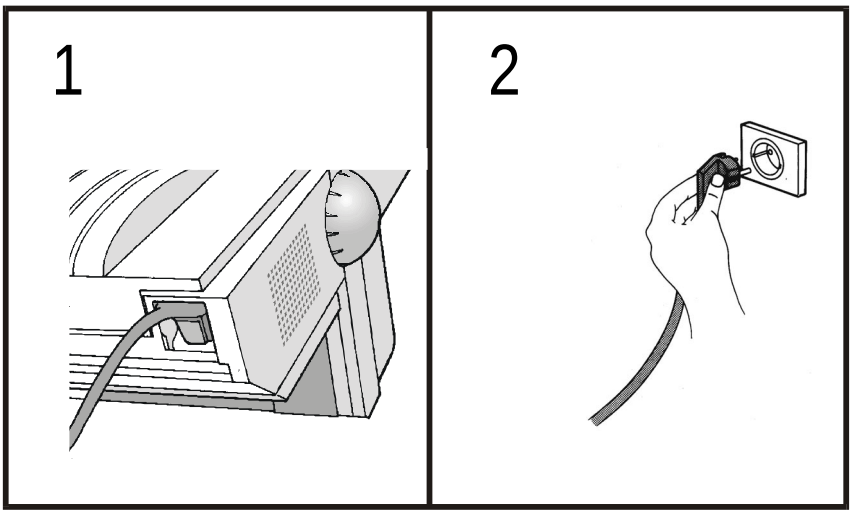

4. If you need to turn the printer on, press the power switch in the *I position* (ON).

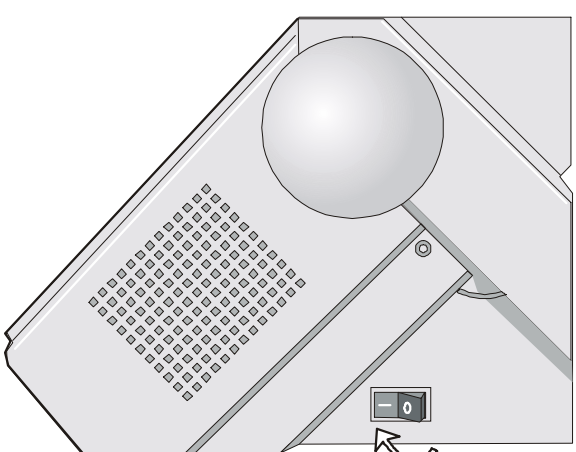

Selecting the Display Language

The display messages for this printer can be displayed in five different languages: English (Default), French, German, Italian and Spanish. To select the language, that you prefer, proceed as follows:

1. Press the PROGRAM key and keep it pressed while powering on the printer until the following message will be displayed:

   `RELEASE KEY`

2. When you release the PROGRAM key, the following messages will be displayed:

   `9078 plus` or `9078D plus`

   then,

   `PRINT OUT? NO`

3. Press the ↓ key to enter the setup. The first setup item is displayed:

   `LOW. JAM SENS. Y`

4. Press the ↓ key until the language first level function is displayed:

   `FUNCTIONS`

5. Press the → key to pass to the second level functions:

   `PAPER OVERLY? NO` for the 9078 plus model

   or

   `SEQUENCE NONE` for the 9078D plus model

6. Press the ↓ key until the setup language is displayed:

   `MENU ENGLISH`

7. Press the → key to scroll the setup languages. When the desired language is displayed, press the PROGRAM key to select it. The printer exits the setup. From now on the display messages appear in the selected language.

Configuring the Printer

Operator Panel Presentation

The operator panel enables you to perform many of the printer functions including paper path selections, font selection and the printer setup.

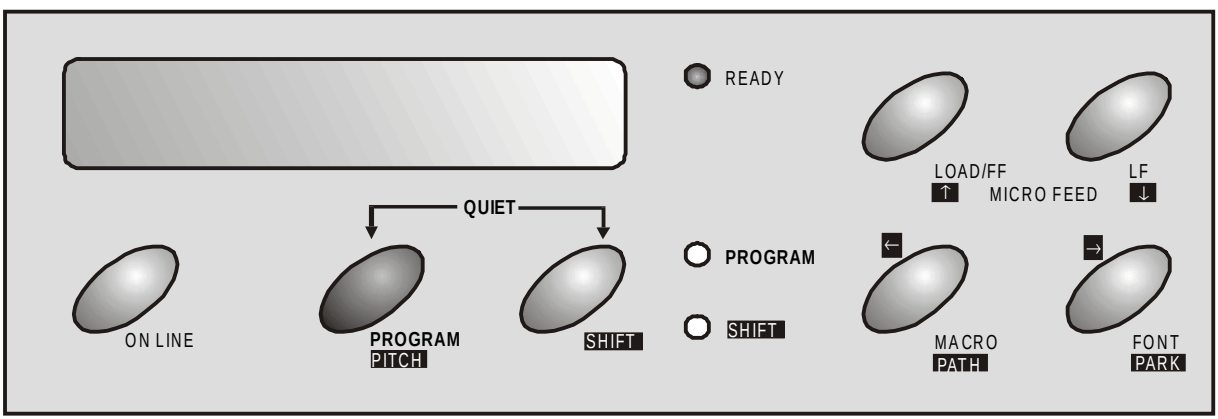

The operator panel consists of:

- A 16 character display (Liquid Crystal Display)
- Three function mode indicators
- Seven function keys

Display Messages

The printer display is used to indicate the printer status or to request an user intervention and gives the following information:

- when paper is already loaded and the printer is off line (READY indicator unlit):

```
M1 - Lower Push E
```

Current Macro
Current Paper Path
Current Emulation

- when paper is already loaded and the printer is on line (READY indicator lit):

```
M1 - Lower Push
```

Current Macro
Current Paper Path

where:

M1, M2, M3, M4	Indicate which of the four User Macros is currently used.
ASF1 ASF2 ASF3 LOWER PUSH UPPER PUSH PUSH-PULL LOW.PUSH&MF PSH-PLL&MF MANUAL FORM	Indicates which Paper Path is currently used. The printer displays only the messages related to the installed devices. LOW.PUSH&MF: The lower push paper path and manual single sheet path are selected (9078 plus model only). PSH-PLL&MF: The push-pull paper path and manual single sheet path are selected (9078 plus model only). MANUAL FORM: The manual single sheet path is selected (9078 plus model only).
E, I	This acronym indicates the Emulation currently used. E indicates the EPSON emulation, whereas I indicates the IBM emulation.

- when there is no paper loaded and the printer is off line (READY indicator unlit):

```
Load Lower Push
```

Current Paper Path

- when there is no paper loaded and the printer is on line (READY indicator lit):

```
M1 - Lower Push
```

Current Macro

Current Paper Path

where:

M1, M2, M3, M4	Indicate which of the four User Macros is currently used.
LOAD ASF1 LOAD ASF2 LOAD ASF3 LOAD LOWER PUSH LOAD UPPER PUSH LOAD LOW.PUSH&MF LOAD MANUAL FORM LOAD PSH-PLL&MF LOAD PUSH-PULL	Indicates that the currently selected paper path is out of paper. The messages are displayed only for the available paper paths, according to the installed devices.
ASF1 ASF2 ASF3 LOWER PUSH UPPER PUSH PUSH-PULL LOW.PUSH&MF PSH-PLL&MF MANUAL FORM	Indicates which Paper Path is currently used. The printer displays only the messages related to the installed devices. LOW.PUSH&MF: The lower push paper path and manual single sheet path are selected (9078 plus model only). PSH-PLL&MF: The push-pull paper path and manual single sheet path are selected (9078 plus model only). MANUAL FORM: The manual single sheet path is selected (9078 plus model only).

The following messages appear to indicate other printer conditions or user intervention requests. The list is in alphabetical order:

Message	Description
COVER OPEN CLOSE COVER	When the printer cover is not closed correctly, the buzzer sounds and the display shows alternately these two messages.
EJECTING	The printer is ejecting the paper out of the printer.
LOAD ASF1 LOAD ASF2 LOAD ASF3 LOAD LOWER PUSH LOAD LOW.PUSH&MF LOAD MANUAL FORM LOAD PSH-PLL&MF LOAD PUSH-PULL LOAD UPPER PUSH	These messages are displayed when the corresponding paper path is out of paper. The printer displays **only** the messages related to the installed devices. LOW.PUSH&MF = Lower push and manual paper path. PSH-PLL&MF = Push-Pull and manual paper path.
LOCKED MENU	When the access to the Printer Setups has been locked at the power on, the printer displays this message.
MACRO CHANGING	The macro has been changed and the printer is updating the settings.
MICRO FEED DOWN ↓	The paper is fed in microsteps downwards when pressing the arrow key.
MICRO FEED UP ↑	The paper is fed in microsteps upwards when pressing the arrow key.
OPER. INTERRUPTED	This message is displayed if the SHIFT key has been pressed to interrupt a park procedure.
PARKING	The printer is parking the fanfold paper.
PATH CHANGING	The path has been changed and the printer is updating the settings.
PRESS A KEY NVM CHANGED	The NVM has been changed. Press any key to set the printer.
QUIET PRINT OFF	Printing at normal noise level.
QUIET PRINT ON	Printing at reduced noise level

Message	Description
RELEASE KEY	This message is displayed when you can release the PROGRAM key in the Self-test selection or in the Power-on Configuration procedure.
RESET & BREAK	When the input buffer is cleared an a break (250 msec.) on a serial interface is sent pressing the PROGRAM and then the ON LINE keys.
SELF TEST	The printer is printing the self-test page.
SHIFT FUNCTION	This message appears to indicate that the Shift functions of the operator panel keys have been selected pressing the SHIFT key.
TEAR IF NECESS. PARK PAPER	These messages are displayed when the printer receives a paper parking command. Tear off the fanfold then press the PARK key to park the paper.
TEAR IF NECESS. EJECT PAPER	These messages are displayed when the printer receives a paper parking command and the TEAR NO is selected for the tear-off function. Tear off the fanfold then press the PARK key to park the paper.
TEAR OFF PAPER PARK PAPER	These messages are displayed when the printer receives a paper parking command but was not able to execute it, because the paper to be parked is longer than 18 inch. Tear off the fanfold paper and then press the PARK key to park the paper.
TEAR OFF PAPER EJECT PAPER	These messages are displayed when the printer receives a paper ejecting command (TEAR NO has been selected for the tear-off function) but was not able to execute it, because the paper to be ejected is longer than 18 inch. Tear off the fanfold paper and then press the PARK key to eject the paper.
UNLOCKED MENU	When the access to the Printer Setups has been unlocked at the power on, the printer displays this message.

For the error messages see "Error Handling" later in this manual.

Indicators

READY	Lit when the printer can receive and print data (printer online). Blinks when there is data in the buffer and the printer is offline. Unlit, when the printer is disabled and the buffer does not contain any data, or during the initialization, setup or tests.
PROGRAM	Blinks when one of the printer setup procedures has been selected: *Program Configuration* or *Power-On Configuration*.
SHIFT	Lit when the alternate function of the keys has been enabled pressing the SHIFT key.

Function Keys

The function keys are enabled, when the printer is offline (READY indicator unlit). The function keys have three functions each.

Normal Function

The *normal* function of the keys does not require previous action to select it. This function is indicated in black characters beside the function keys.

Shift Function

The *alternate* function is selected pressing the SHIFT key.

The alternate functions of the keys are described on the gray areas beside the keys. The SHIFT indicator is lit and the display shows `SHIFT FUNCTION`.

This function is not enabled, if the printer is in setup mode.

Program Function

The *program* function is selected pressing the PROGRAM key, where:

- If you press the key while powering on the printer, the *Power-On Configuration* is selected.
- Pressing the key when the printer is enabled without printing or disabled (READY indicator unlit), the Program Setup is selected.

In the Program Setup mode only the four arrow keys and the PROGRAM key are enabled.

When the printer is in setup mode, the PROGRAM indicator blinks.

ON LINE Key

ON LINE	Normal Function	Enables or disables the printer. • If this key is pressed while powering the printer on, the self test is printed; the printout is stopped pressing this key again. • In an error condition, once the error cause has been removed, press this key to enable the printer. • If the Tear-Off Function in the *Program Setup* is set to Manual, press this key to position the paper for the Tear-Off.
	Program Function	Pressing this key, the input buffer is cleared an a break (250 msec.) on a serial interface is sent. The message `RESET & BREAK` is displayed.

PROGRAM Key

PROGRAM	Normal Function	Enables the printer setups as follows: • Pressing this key while powering on the printer, the *Power-On Configuration* is selected. • Pressing this key when the printer is enabled without printing or disabled (READY indicator unlit), the *Program Setup* is enabled.
PITCH	Shift Function	Selects the pitch to be used with the currently selected font. The selected pitch is valid until the printer is turned off.
	Program Function	Exits the current printer setup. See also "Leaving the Printer Setups", later in this section.

SHIFT Key

SHIFT	Normal Function	Enables the alternative key functions. If the printer is receiving print data, press the ON LINE key before pressing the SHIFT key. If no printing data are in the print buffer, pressing the SHIFT key, the printer goes offline. The display then shows `SHIFT FUNCTION` to indicate that the Shift Function of the keys is enabled. May be used to abort paper parking procedure. See also "How to Handle the Paper Parking", later in this manual.
	Shift Function	Disables the alternative key functions. If pressed after the PARK key, the parking procedure is interrupted.

LOAD/FF Key

LOAD/FF	Normal Function	Executes a Form Feed (FF): when paper is loaded into the printer, it advances to the following page; if no paper is loaded, it is positioned for printing.
↑	Shift Function	Moves the paper forward in microsteps. Keeping the key pressed the paper is moved continuously at increasing speed.
↑	Program Function	Scrolls the parameters of the functions or macros backwards.

LF Key

LF	Normal Function	Performs a line feed according to the current line spacing settings.
↓	Shift Function	Moves the paper backward in microsteps. Keeping the key pressed the paper is moved continuously at increasing speed.
↓	Program Function	Scrolls the setup and macro functions forward.

MACRO Key

MACRO	Normal Function	Selects one of the user macros (Macro 1, Macro 2, Macro 3 or Macro 4). If you want to select the displayed macro, wait for 2 seconds without pressing any key and the parameters of this macro will be set .
PATH	Shift Function	Selects one of the paper paths. The parameters of the displayed path are set pressing the SHIFT key or waiting for 2 seconds without pressing any key.
←	Program Function	Scrolls the setup and macro functions backward.

FONT Key

FONT	Normal Function	Selects the font to be used with the currently selected pitch. The selected font is valid until the printer is turned off.
PARK	Shift Function	Parks the paper in the currently selected paper path.
→	Program Function	Scrolls the setup and macro functions forward.

Key Combinations

PROGRAM + SHIFT	Normal Function	When the printer is on line without printing or printing data (READY indicator lit) or when the printer is unable to receive and print data but there is still data in the input buffer (READY indicator blinks) press these two keys contemporaneously, the printing noise level toggles between normal (`QUIET PRINT OFF`) and reduced noise level (`QUIET PRINT ON`). When the printer is off line (READY indicator unlit), the printing noise level function is disabled.
ONLINE + MACRO + SHIFT	Normal Function	Lock or unlock the access to the printer setups. See later "How to Lock/Unlock the Access to the Printer Setups" section.

Printer Setups

The main printer setup parameters can be selected via the operator panel. The setup parameters are divided into two printer setups, the *Power-On Configuration*, that allows a complete configuration at installation time according to the hardware and the emulation types, and the *Program Setup*, that allows you to set the functions that are the most useful in your daily job. This settings can be selected when the printer is online without printing or offline (READY indicator unlit). These settings can be stored in the NVM.

Entering the Printer Setups

- Press the PROGRAM key and keep it pressed at the printer power on until the `RELEASE KEY` message is displayed to select the *Power-On Configuration*.

- Press the PROGRAM key when the printer is online without printing or offline (READY indicator unlit) to select the *Program Setup*.

Moving within the Printer Setups

The arrow keys ↑, ↓, ← , → are used to move within the different functions inside the Printer Setups. See the following description of the setup items.

Leaving the Printer Setups

- Pressing the PROGRAM key in the *Power-On Configuration* the printer exits from the setup and the new settings will be automatically saved.

- Pressing the PROGRAM key in the *Program Setup*, the following choice is offered to store the values set:

`STORE? QUIT`	The new settings are not activated and the old settings remain valid.
`STORE? SAVE`	The new settings are stored permanently in the NVM (Non Volatile Memory).
`STORE? CURRENT`	The new settings remain valid until the printer is turned off.

Press the → or ← keys to scan these selections forward and backwards. When the desired setting is displayed, press the PROGRAM key to exit from the Setup.

Power-On Configuration

The default values of the various functions are indicated in bold.

Entering the Power-On Configuration

1. Make sure that the printer is turned off.

2. Press and hold the PROGRAM key pressed while powering on the printer until the `RELEASE KEY` message is displayed. As soon as the PROGRAM key gets released, the following message will be displayed:

9078 plus	or	9078D plus

then,

PRINT OUT? NO

The following figure shows the structure of the *Power-On Configuration* and how to move inside the Setup.

Main Structure

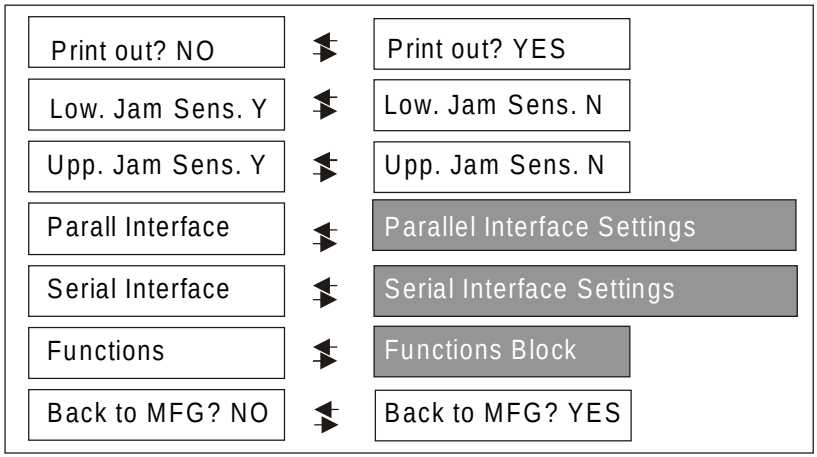

The functions concerning the interfaces group the parameters for the configuration of the interfaces.

The setup item `Functions` groups the following printer functions:

- Paper overlay (9078 plus model only),
- Paper loading sequence,
- Buzzer setting,
- Quick cut sheet loading (9078 plus model only),
- Ribbon type,
- Code bar density,
- Text printing direction,
- Graphics printing direction,
- Bar code printing direction,
- Paper path at power on,
- Language of the display messages.

Printout of the Printer Settings

PRINT OUT? NO → or ← PRINT OUT? YES

↓

LOW.JAM SENS.Y

PRINT OUT? NO	The Setup is not printed.
PRINT OUT? YES	The printer setup is printed showing the currently selected values. The printout starts as soon as you select this value.

Enable/Disable Lower Tractor Jam Sensor

PRINT OUT? NO

↑

LOW. JAM SENS. Y → or ←

LOW. JAM SENS. N → or ←

↓

UPP. JAM SENS. Y

LOW. JAM SENS. Y	Enables the paper jam sensor located in the Lower Push Tractor.
LOW. JAM SENS. N	Disables the paper jam sensor located in the Lower Push Tractor.

When the cutter option is used, the jam sensor should be enabled for higher cut precision.

Enable/Disable Upper Tractor Jam Sensor (only 9078D model)

LOW. JAM SENS. Y

↑

UPP. JAM SENS. Y	→ or ←
UPP. JAM SENS. N	→ or ←

↓

PARALL INTERFACE

UPP. JAM SENS. Y	Enables the paper jam sensor located in the Upper Push Tractor.
UPP. JAM SENS. N	Disables the paper jam sensor located in the Upper Push Tractor.

When the cutter option is used, the jam sensor should be enabled for higher cut precision.

Parallel Interface

This menu defines the use of the parallel interface and is structured according to the interface specific parameters.

Parallel Interface Parameters

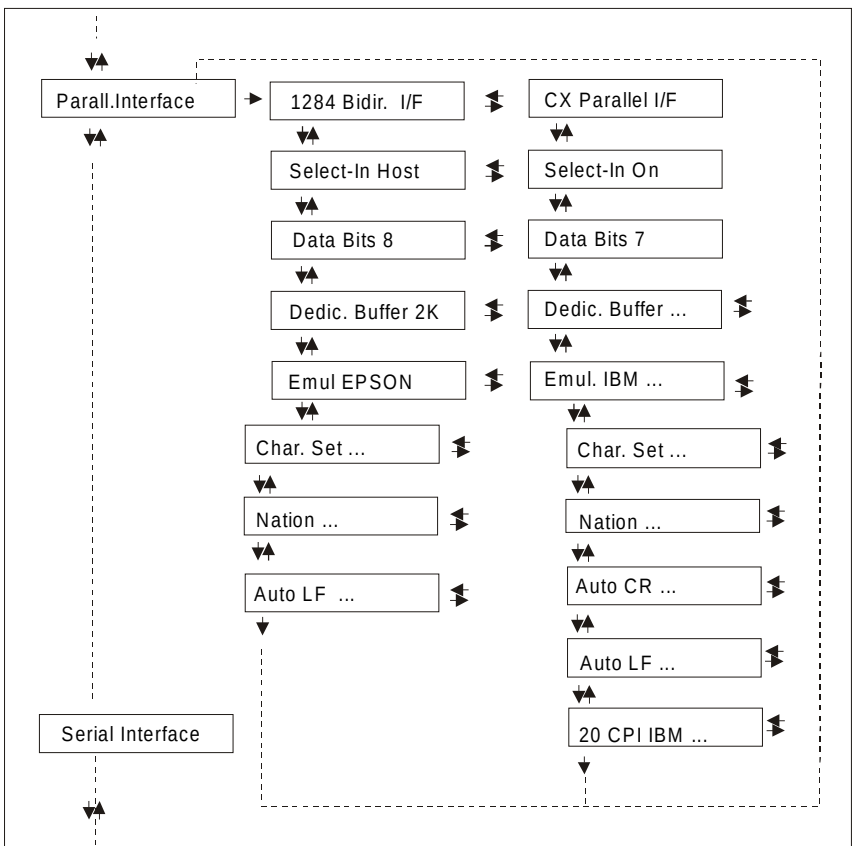

Interface Type

UPP. JAM SENSOR Y
↓
PARALL INTERFACE →
↓
SERIAL INTERFACE

PARALL INTERFACE
↑
1284 BIDIR I/F → or ←
CX PARALLEL I/F → or ←
↓
SELECT-IN HOST

1284 BIDIR i/F	Bidirectional IEEE 1284 parallel interface.
CX PARALLEL I/F	Centronics type parallel interface (monodirectional)

Setting the Select-In Signal

1284 BIDIR. I/F
↑
SELECT-IN HOST → or ←
SELECTIN ON → or ←
↓
DATA BITS 8

SELECT-IN ON	The SELECT-IN signal of the parallel interface is ignored and treated always as ON.
SELECT-IN HOST	The printer checks the SELECT-IN signal coming from the host.

Number of Data Bits

SELECT-IN HOST

↑

DATA BITS 8	→ or ←
DATA BITS 7	→ or ←

↓

DEDIC.BUFFER 2K

Selection of the number of data bits: 7 or 8

Input Buffer Size

DATA BITS 8

↑

DEDIC.BUFFER 256	→ or ←
DEDIC.BUFFER 2K	→ or ←
DEDIC.BUFFER 12K	→ or ←
DEDIC.BUFFER 32K	→ or ←
DEDIC.BUFFER 64K	→ or ←

↓

EMUL. EPSON LQ

Selects the input buffer size. If the input buffer is set to 64K, the DLL is not available.

Printer Emulation

DEDIC.BUFFER 2K

↑

EMUL. EPSON LQ	→ or ←
EMUL. IBM XL24	→ or ←
EMUL. IBM XL24AGM	→ or ←
EMUL. IBM 2391	→ or ←

↓

CHAR. SET CS2

EMUL. EPSON LQ	The printer uses the EPSON LQ 1050/2550 emulation.
EMUL. IBM XL24	The printer uses the IBM Proprinter XL24e emulation.
EMUL. IBM XL24AGM	The printer uses the IBM Proprinter XL24 AGM emulation.
EMUL. IBM 2391	The printer uses the IBM Personal 2391+ emulation.

EPSON Character Sets

EMUL. EPSON LQ

↑

CHAR. SET CS1	→ or ←
CHAR. SET CS2	→ or ←
CHAR. SET ITALIC	→ or ←

↓

NATION CP437

These items select the character set to be used in EPSON emulation.

IBM Character sets

EMUL. IBM xxx

↑

CHAR. SET CS1	→ or ←
CHAR. SET CS2	→ or ←

↓

NATION CP437

These items select the character set to be used in IBM Proprinter emulation.

EPSON National Character sets

CHAR. SET CS2

↑

NATION CP437	→ or ←
NATION ...	→ or ←
NATION LATIN A1	→ or ←

↓

AUTO LF NO

The following national character sets are available:

CP 437	CP437 G	96 GREEK	CP850	CP851	CP 852	CP 853	CP 855
CP 857	CP 858	CP 860	CP 862	CP 863	CP 864	CP 865	CP 866
CP 867	CP 876	CP 877	CP 1250	CP 1251	CP 1252	GOST	TASS
MAZOWIA	ISO 8859/1	ISO 8859/2	ISO 8859/3	ISO 8859/4	ISO 8859/5	ISO 8859/6	ISO 8859/7
ISO 8859/8	ISO 8859/9	ISO 8859/15	USA	FRANCE	GERMANY	ENGLAND	DENMARK1
SWEDEN	ITALY	SPAIN1	JAPAN	NORWAY	DENMARK2	SPAIN2	LATIN A1

The CP 858 and ISO 8859/15 character sets contain the Euro character.

IBM National Character Sets

CHAR. SET CS2

↑

NATION CP437	→ or ←
NATION ...	→ or ←
NATION 8859/15	→ or ←

↓

AUTO CR NO

The following national character sets can be selected:

CP 437	CP437 G	96 GREEK	CP850	CP851	CP 852	CP 853	CP 855
CP 857	CP 858	CP 860	CP 862	CP 863	CP 864	CP 865	CP 866
CP 867	CP 876	CP 877	CP 1250	CP 1251	CP 1252	GOST	TASS
MAZOWIA	ISO 8859/1	ISO 8859/2	ISO 8859/3	ISO 8859/4	ISO 8859/5	ISO 8859/6	ISO 8859/7
ISO 8859/8	ISO 8859/9	ISO 8859/15					

The CP 858 and ISO 8859/15 character sets contain the Euro character.

CR Code Behavior

These items are displayed only if the IBM emulation is selected.

NATION xxx

↑

AUTO CR NO	→ or ←
AUTO CR YES	→ or ←

↓

AUTO LF NO

AUTO CR NO	No automatic carriage return is performed after a LF, VT or ESCJ code.
AUTO CR YES	The printer performs an automatic carriage return after a LF, VT or ESCJ code .

LF Code Behavior

AUTO CR NO

or

NATION CP437

↑

AUTO LF NO	→ or ←
AUTO LF YES	→ or ←
AUTO LF HOST	→ or ←

↓

20 CPI IBM NO

or

PARALL INTERFACE

AUTO LF NO	No Automatic LF after CR.
AUTO LF YES	Automatic LF after CR.
AUTO LF HOST	Only in EPSON emulation. The printer checks the AUTOFEEDXT signal coming from the host and executes an automatic LF after CR, if the signal is low.

IBM Compressed Printing

These items are displayed only, if the IBM emulation is selected.

AUTO LF NO

↑

20 CPI IBM NO	→ or ←
20 CPI IBM YES	→ or ←

↓

PARALL INTERFACE

20 CPI IBM NO The compressed printing is performed at 17,1 cpi.

20 CPI IBM YES The compressed printing is performed at 20 cpi.

Serial Interface

This menu defines the use of the serial interface and is structured according to the interface specific parameters.

Serial Interface Parameters

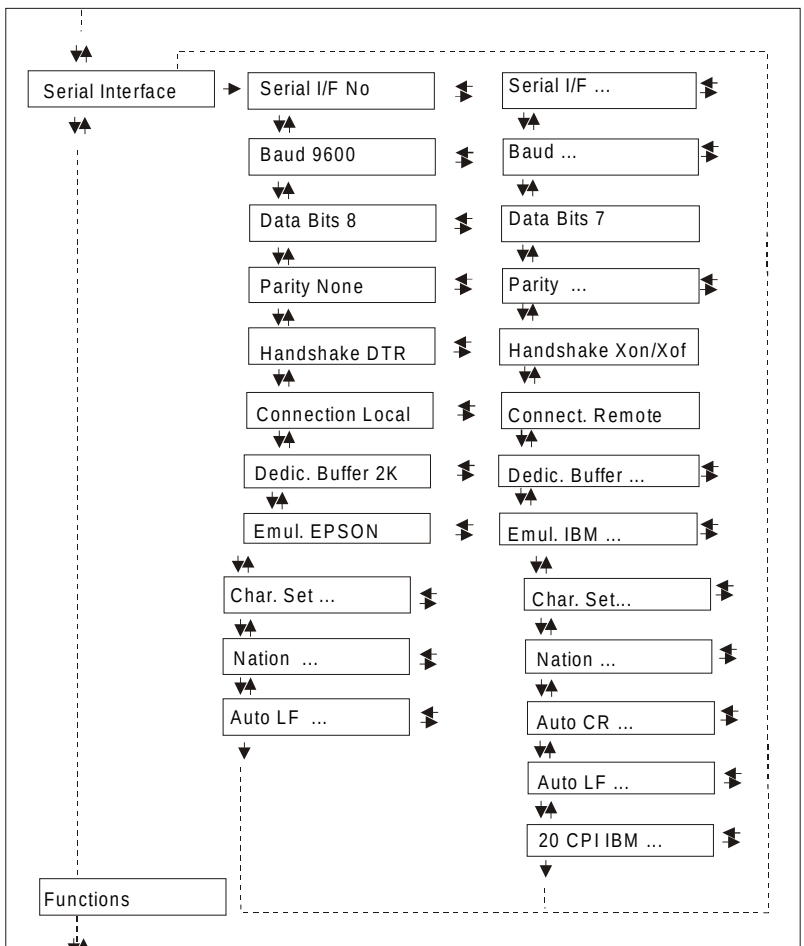

Interface Type

PARALL INTERFACE

↑

SERIAL INTERFACE →

↓

FUNCTIONS

SERIAL INTERFACE

↑

SERIAL I/F NO → or ←

SERIAL I/F 232 → or ←

SERIAL I/F 422 → or ←

↓

BAUD 9600

SERIAL I/F NO	The serial interface is disabled
SERIAL I/F 232	Defines the usage of the serial interface RS-232/C
SERIAL I/F 422	Defines the usage of the serial interface RS-422/A

Baud Rate

SERIAL I/F NO

↑

BAUD 300	→ or ←
BAUD 600	→ or ←
BAUD 1200	→ or ←
BAUD 2400	→ or ←
BAUD 4800	→ or ←
BAUD 9600	→ or ←
BAUD 19200	→ or ←
BAUD 38400	→ or ←

↓

DATA BITS 8

The baud rate is selected in bits per second. The above values can be selected.

Number of Data Bits

BAUD 9600

↑

DATA BITS 8	→ or ←
DATA BITS 7	→ or ←

↓

PARITY NONE

Selection of the number of data bits: 7 or 8.

Parity Check

DATA BITS 8

↑

PARITY NONE	→ or ←
PARITY ODD	→ or ←
PARITY EVEN	→ or ←
PARITY MARK	→ or ←
PARITY SPACE	→ or ←

↓

HANDSHAKE DTR

PARITY NONE	Data does not have a parity bit, i.e. 8 bit data are transferred and the parity check is disabled.
PARITY ODD	Parity check is enabled for odd parity.
PARITY EVEN	Parity check is enabled for even parity.
PARITY MARK	Parity check is disabled and the transmitted parity bit is always a Mark.
PARITY SPACE	Parity check is disabled and the transmitted parity bit is always a Space.

Handshake Protocol

PARITY NONE

↑

HANDSHAKE DTR	→ or ←
HANDSHAKE XONXOF	→ or ←

↓

CONNECTION LOCAL

HANDSHAKE DTR	The Handshake is performed using the DTR Protocol.
HANDSHAKE XONXOF	The Handshake is performed using the XON-XOFF Protocol.

Connection Type

HANDSHAKE DTR

↑

CONNECTION LOCAL	→ or ←
CONNECT. REMOTE	→ or ←

↓

DEDIC.BUFFER 2K

Selects the connection type: local or remote.

Input Buffer Size

DATA BITS 8

↑

DEDIC.BUFFER 256	→ or ←
DEDIC.BUFFER 2K	→ or ←
DEDIC.BUFFER 12K	→ or ←
DEDIC.BUFFER 32K	→ or ←
DEDIC.BUFFER 64K	→ or ←

↓

EMUL. EPSON LQ

Selects the input buffer size. If the input buffer is set to 64K, the DLL is not available.

Printer Emulation

DEDIC.BUFFER 2K

↑

EMUL. EPSON LQ	→ or ←
EMUL. IBM XL24	→ or ←
EMUL. IBM XL24AGM	→ or ←
EMUL. IBM 2391	→ or ←

↓

CHAR. SET CS2

EMUL. EPSON LQ	The printer uses the EPSON LQ 1050/2550 emulation.
EMUL. IBM XL24	The printer uses the IBM Proprinter XL24e emulation.
EMUL. IBM XL24AGM	The printer uses the IBM Proprinter XL24 AGM emulation.
EMUL. IBM 2391	The printer uses the IBM Personal 2391 + emulation.

EPSON Character Sets

EMUL. EPSON LQ

↑

CHAR. SET CS1	→ or ←
CHAR. SET CS2	→ or ←
CHAR. SET ITALIC	→ or ←

↓

NATION CP437

These items select the character set to be used in EPSON emulation.

IBM Character sets

EMUL. IBM xxx

↑

CHAR. SET CS1	→ or ←
CHAR. SET CS2	→ or ←

↓

NATION CP437

These items select the character set to be used in IBM Proprinter emulation.

EPSON National Character sets

CHAR. SET CS2

↑

NATION CP437	→ or ←
NATION ...	→ or ←
NATION LATIN A1	→ or ←

↓

AUTO LF NO

The following national character sets are available:

CP 437	CP437 G	96 GREEK	CP850	CP851	CP 852	CP 853	CP 855
CP 857	CP 858	CP 860	CP 862	CP 863	CP 864	CP 865	CP 866
CP 867	CP 876	CP 877	CP 1250	CP 1251	CP 1252	GOST	TASS
MAZOWIA	ISO 8859/1	ISO 8859/2	ISO 8859/3	ISO 8859/4	ISO 8859/5	ISO 8859/6	ISO 8859/7
ISO 8859/8	ISO 8859/9	ISO 8859/15	USA	FRANCE	GERMANY	ENGLAND	DENMARK1
SWEDEN	ITALY	SPAIN1	JAPAN	NORWAY	DENMARK2	SPAIN2	LATIN A1

The CP 858 and ISO 8859/15 character sets contain the Euro character.

IBM National Character Sets

CHAR. SET CS2

↑

NATION CP437	→ or ←
NATION ...	→ or ←
NATION 8859/15	→ or ←

↓

AUTO CR NO

The following national character sets can be selected:

CP 437	CP437 G	96 GREEK	CP850	CP851	CP 852	CP 853	CP 855
CP 857	CP 858	CP 860	CP 862	CP 863	CP 864	CP 865	CP 866
CP 867	CP 876	CP 877	CP 1250	CP 1251	CP 1252	GOST	TASS
MAZOWIA	ISO 8859/1	ISO 8859/2	ISO 8859/3	ISO 8859/4	ISO 8859/5	ISO 8859/6	ISO 8859/7
ISO 8859/8	ISO 8859/9	ISO 8859/15					

The CP 858 and ISO 8859/15 character sets contain the Euro character.

CR Code Behavior

These items are displayed only if the IBM emulation is selected.

NATION xxx

↑

AUTO CR NO	→ or ←
AUTO CR YES	→ or ←

↓

AUTO LF NO

AUTO CR NO	No automatic carriage return is performed after a LF, VT or ESCJ code.
AUTO CR YES	The printer performs an automatic carriage return after a LF, VT or ESCJ code .

LF Code Behavior

AUTO CR NO
or
NATION CP437

↑

AUTO LF NO	→ or ←
AUTO LF YES	→ or ←

↓

20 CPI IBM NO
or
SERIAL INTERFACE

AUTO LF NO	No Automatic LF after CR.
AUTO LF YES	Automatic LF after CR.

IBM Compressed Printing

These items are displayed only, if the IBM emulation is selected.

AUTO LF NO

↑

20 CPI IBM NO	→ or ←
20 CPI IBM YES	→ or ←

↓

SERIAL INTERFACE

20 CPI IBM NO The compressed printing is performed at 17,1 cpi.

20 CPI IBM YES The compressed printing is performed at 20 cpi.

Functions

This item groups various printer functions, with which you can configure the printer.

9078 plus model

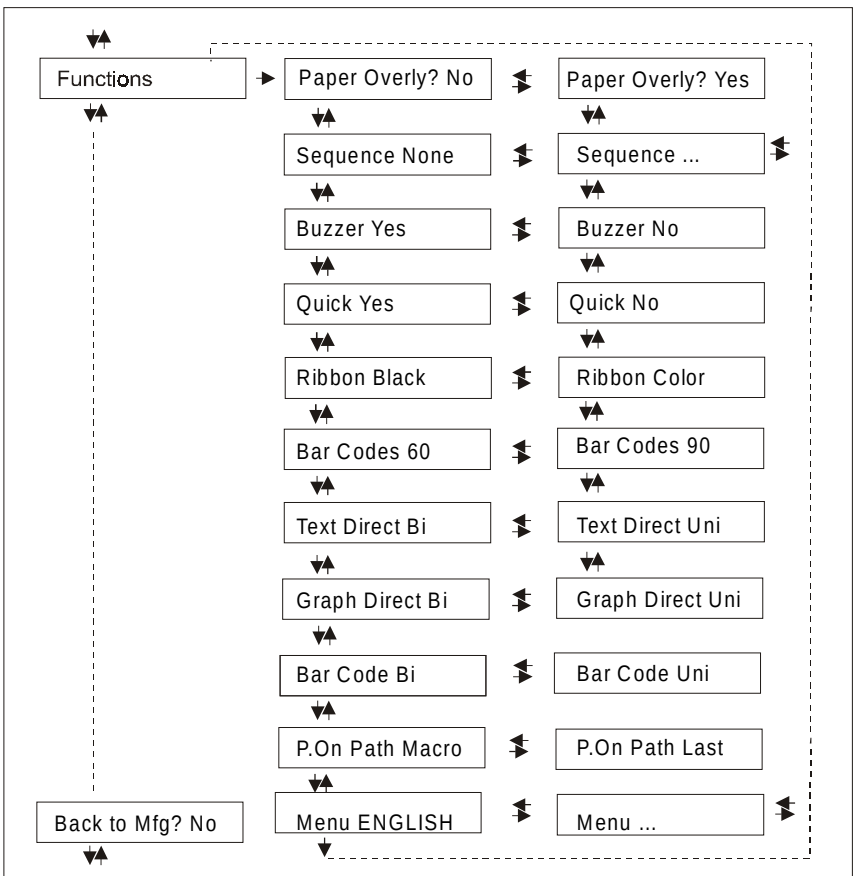

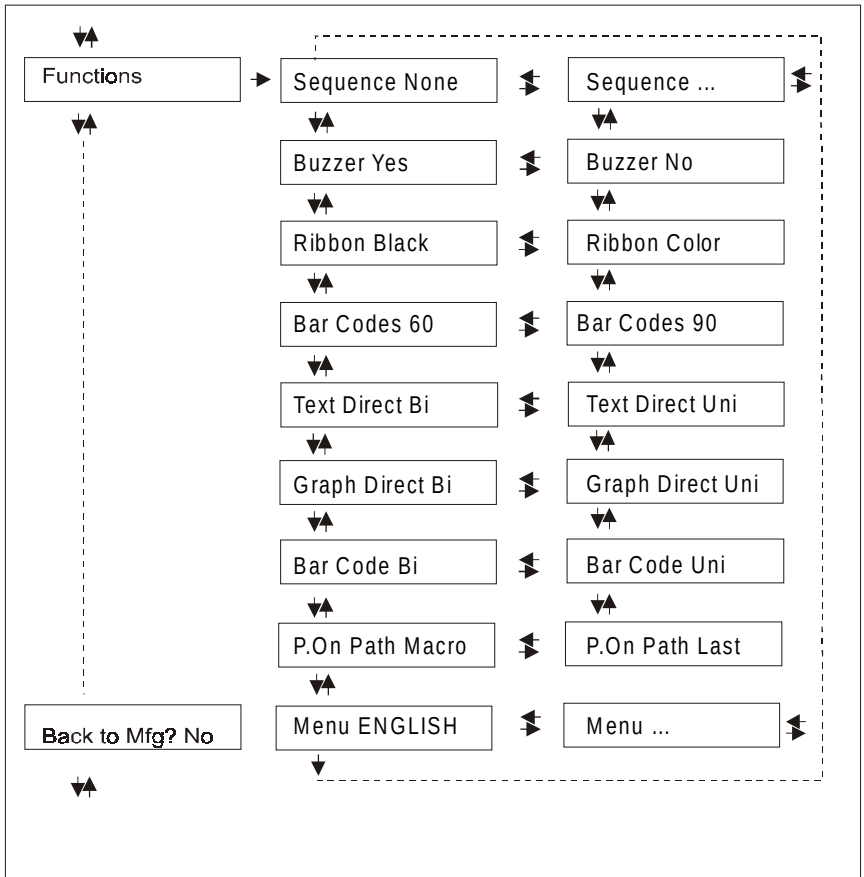
Functions
Sequence None
Sequence ...
Buzzer Yes
Buzzer No
Ribbon Black
Ribbon Color
Bar Codes 60
Bar Codes 90
Text Direct Bi
Text Direct Uni
Graph Direct Bi
Graph Direct Uni
Bar Code Bi
Bar Code Uni
P.On Path Macro
P.On Path Last
Back to Mfg? No
Menu ENGLISH
Menu ...

Setting the Functions Group Items

SERIAL INTERFACE		FUNCTIONS	
↑		↑	
FUNCTIONS	→	PAPER OVERLY NO	9078 plus
		SEQUENCE NONE	9078D plus
↓		↓	
BACK TO MFG: NO		SEQUENCE NONE or BUZZER YES	9078 plus 9078D plus

Paper Overlapping (9078 plus model only)

FUNCTIONS

↑

PAPER OVERLY NO	→ or ←
PAPER OVERLY YES	→ or ←

↓

SEQUENCE NONE

PAPER OVERLY NO	When feeding a cut sheet through the manual entry slot, the fanfold paper must be parked.
PAPER OVERLY YES	A single sheet can be fed simultaneously with a fanfold.

If the printer is using the Push Pull paper feed mode the Overlay Function cannot be selected. Only the `Paper Overly No` item appears.

Paper Loading Sequence

FUNCTIONS (9078D plus model)
or
PAPER OVERLY NO (9078 plus model)

↑

SEQUENCE NONE	→ or ←
SEQ. L + U PUSH (9078D plus model only)	→ or ←
SEQUENCE ASF1+2	→ or ←
SEQUENCE ASF123	→ or ←

↓

BUZZER YES

These items are displayed only, if the accessories to which they refer are installed.

SEQUENCE NONE	The paper is fed only through the path selected by operator panel.
SEQ. L + U PUSH	The paper is fed firstly through the lower push path and successively through the upper push path (9078D plus model only).
SEQUENCE ASF1+2	This item appears only, if the automatic sheet feeder is installed. The paper is fed from the first bin until this bin is out of paper. Then the paper is fed from the second bin.
SEQUENCE ASF123	This item appears only, if the automatic sheet feeder is installed. The paper is fed from the first bin until this bin is out of paper. Then the paper is fed from the second bin and finally from the third bin.

Enable/Disable the Buzzer

SEQUENCE NONE

↑

BUZZER YES	→ or ←
BUZZER NO	→ or ←

↓

QUICK YES (9078 plus model)

or

BLACK RIBBON (9078D plus model)

Enable or disables the buzzer.

Quick Manual Loading through the Manual Slot (9078 plus model only)

BUZZER YES

↑

QUICK NO	→ or ←
QUICK YES	→ or ←

↓

RIBBON BLACK

QUICK NO	The single sheet in the manual path is loaded by the operator. The printer is then disabled.
QUICK YES	The single sheet in the manual path is loaded automatically. The printer is then enabled.

Ribbon Type Selection

QUICK YES (9078 plus model)

or

BUZZER YES (9078D plus model)

↑

RIBBON BLACK	→ or ←
RIBBON COLOR	→ or ←

↓

BAR CODE 60DPI

Selects the ribbon type to be used with the printer: black or color.

Bar Code Density

RIBBON BLACK

↑

BAR CODE 60DPI	→ or ←
BAR CODE 90DPI	→ or ←

↓

TEXT DIRECT BI

Selects the bar code print density: 60 or 90 dpi.

Text Print Direction

BAR CODE 60DPI

↑

TEXT DIRECT BI	→ or ←
TEXT DIRECT UNI	→ or ←

↓

GRAPH DIRECT BI

Selects the print direction for text: bidirectional or unidirectional.

Graphics Print Direction

TEXT DIRECT BI

↑

GRAPH DIRECT BI	→ or ←
GRAPH DIRECT UNI	→ or ←

↓

BARCODES DIR.UNI

Selects the print direction for graphics: bidirectional or unidirectional.

Bar Codes Print Direction

GRAPH DIRECT BI

↑

BARCODES DIR.BI	→ or ←
BARCODES DIR.UNI	→ or ←

↓

P. ON PATH MACRO

Selects the print direction for bar codes: bidirectional or unidirectional.

Paper Path at Power-On

BARCODES DIR.UNI

↑

P. ON PATH MACRO	→ or ←
P. ON PATH LAST	→ or ←

↓

MENU ENGLISH

P. ON PATH MACRO	The paper path at power-on is the one from the default Macro.
P. ON PATH LAST	The paper path at power-on is the last one that was selected before the printer was powered off.

Selection of the Language of the Display Messages

P. ON PATH MACRO

↑

MENU ENGLISH	→ or ←
MENU ITALIANO	→ or ←
MENU FRANCAIS	→ or ←
MENU ESPANOL	→ or ←
MENUE DEUTSCH	→ or ←

↓

FUNCTIONS

These items are self explaining.

See also "Selecting the Display Language" before in this manual.

Resetting to Factory Default Values

With the BACK TO MFG function it is possible to reset all items in the Power On Configuration and in the Program Setup to their factory default values. This may be useful if you do not remember the values you set in the menus, or because you simply changed you mind about the settings you have just done. The default values for the menu items are indicated in bold

FUNCTIONS

↑

BACK TO MFG: NO	→ or ←	BACK TO MFG: YES

↓or PROG

PRINT OUT ? NO

If you want to select BACK TO MFG:YES, you have to exit from this item using the ↑ or the ↓ key, in order to confirm the selection of this value.

At this point, the *Power On Configuration* Setup procedure is finished. If you exit pressing the ↓ and the PROGRAM key, the new settings will be saved.

Do not power off the printer before all data have been written into the NVM and the printer has returned online.