Program Setup

The default values of the various functions are indicated in bold.

Entering the Program Setup

Press the PROGRAM key when the printer is turned on and is offline or online without printing. The following message will be displayed:

```
PRINT OUT? NO
```

The following figure shows the structure and how to move inside the Program Setup.

Main Structure

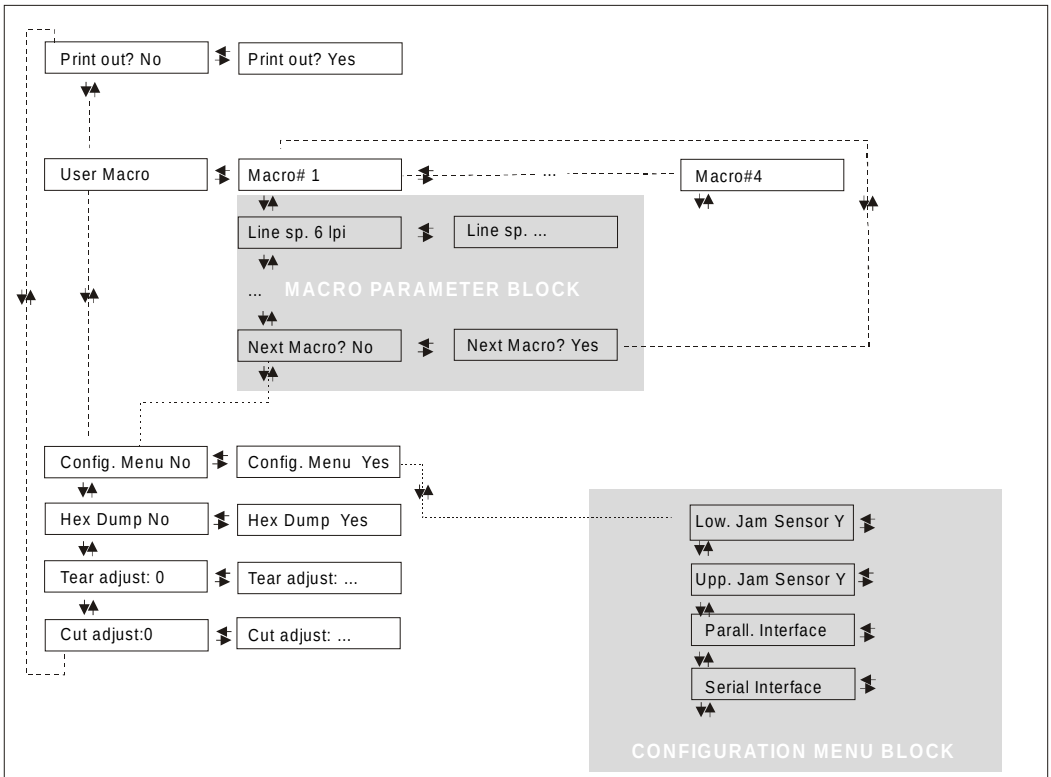

The items define the following parameters:

- Four user macros
- The direct access to the Power-On Configuration
- Hexadecimal printout
- Tear-Off adjustment
- Cut adjustment

Printout of the Printer Settings

PRINT OUT? NO → or ← PRINT OUT? YES

↓

USER MACRO

PRINT OUT? NO	The Setup is not printed.
PRINT OUT? YES	The printer setup is printed. The printout starts as soon as you select this value.

NOTE: The Program setup printout indicates:

- the currently selected values,
- the current selected macro is marked with the #x# symbols (`USER MACRO #x#`),
- the current firmware release.

USER MACRO

The `USER MACRO` item allows to prepare four printing environments (`MACRO#1`, `MACRO#2`, `MACRO#3` and `MACRO#4`). Each macro is composed of a group of parameters which define a configuration that can then be recalled to easily set the printer for four printing environments.

SELECTION OF THE USER MACRO

PRINT OUT? NO

↓

USER MACRO →

↓

CONFIG MENU NO

USER MACRO

↑

MACRO # 1 → or ←

MACRO # 2 → or ←

MACRO # 3 → or ←

MACRO # 4 → or ←

↓

LINE SP. 6 LPP

Selection of the macro for which you intend to set the parameters.

When a new macro is selected and the fanfold paper is present in the paper path set in the previous macro, it will be automatically parked (`TEAR IF NECESS/PARK PAPER` is displayed). Tear off this fanfold paper to avoid paper jams and press PARK key.

USER MACRO PARAMETERS

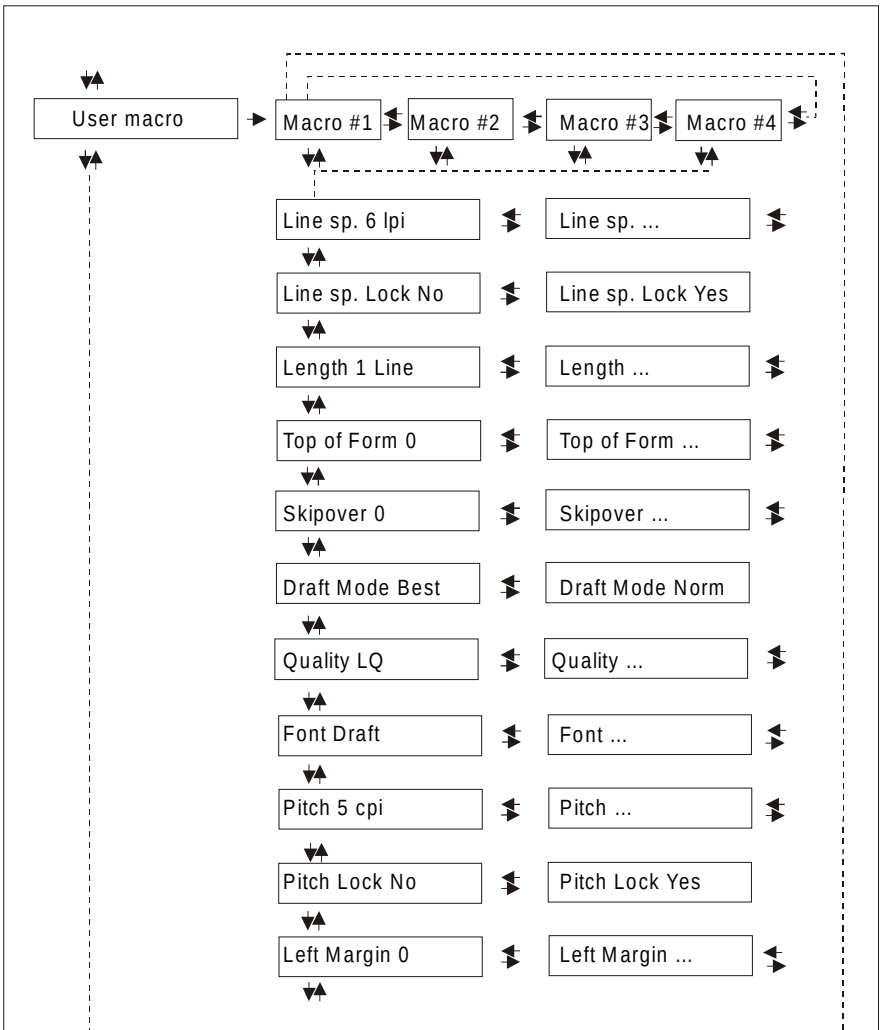

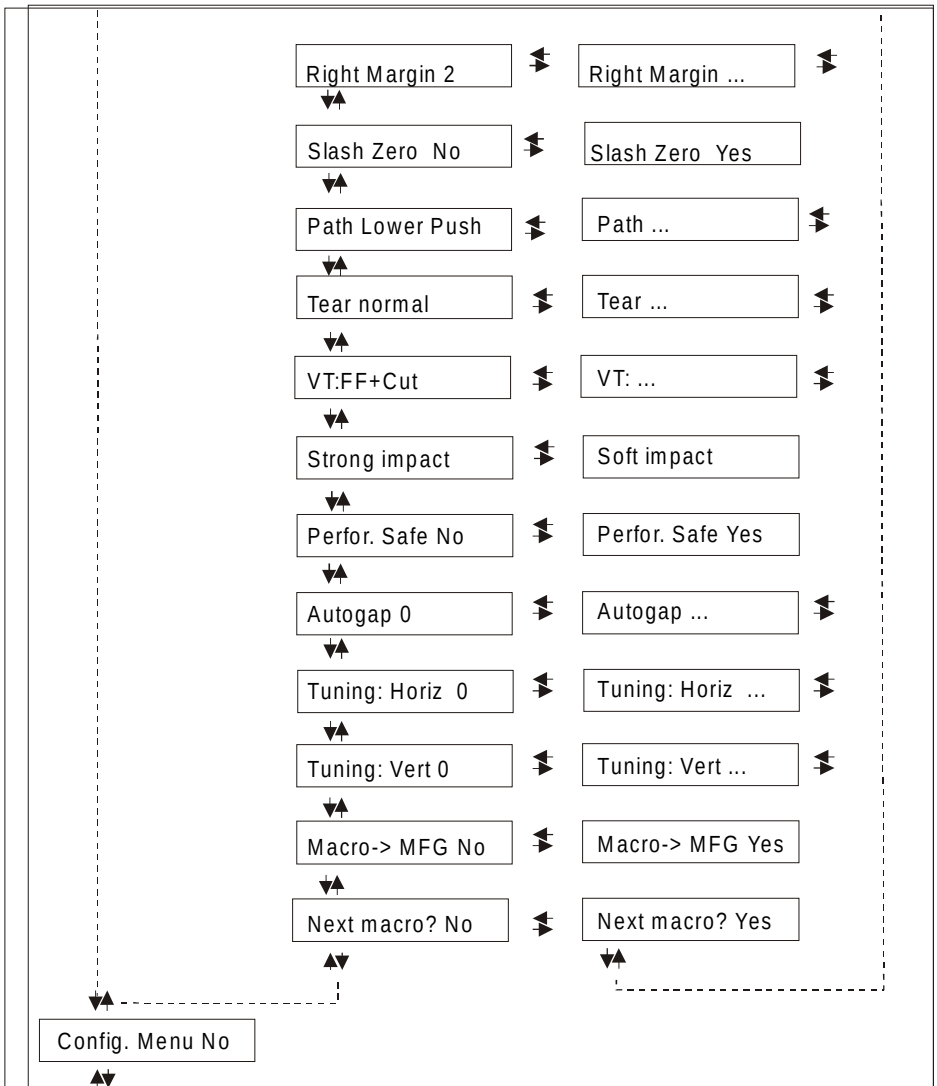
Right Margin 2
Right Margin ...
Slash Zero No
Slash Zero Yes
Path Lower Push
Path ...
Tear normal
Tear ...
VT:FF+Cut
VT: ...
Strong impact
Soft impact
Perfor. Safe No
Perfor. Safe Yes
Autogap 0
Autogap ...
Tuning: Horiz 0
Tuning: Horiz ...
Tuning: Vert 0
Tuning: Vert ...
Macro-> MFG No
Macro-> MFG Yes
Next macro? No
Next macro? Yes
Config. Menu No

Line Spacing

MACRO # 1

↑

MACRO# 1	→	**LINE SP. 6 LPI**	→ or ←
		LINE SP. 8 LPI	→ or ←
		LINE SP. 12 LPI	→ or ←
		LINE SP 3L/30MM	→ or ←
		LINE SP 4L/30MM	→ or ←
		LINE SP 6L/30MM	→ or ←
		LINE SP 8L/30MM	→ or ←
		LINE SP 12L/30MM	→ or ←

↓

LINE SP LOCK NO

These values define the line spacing in lines/inch (6, 8, 12) or in lines per 30 mm (3, 4, 6, 8, 12).

Line Spacing Lock

LINE SP. 6 LPI

↑

LINE SP. LOCK NO	→ or ←
LINE SP. LOCK YES	→ or ←

↓

LENGTH xxx

LINE SP. LOCK NO	Setting this item, the value set for vertical spacing can be changed by software or operator panel.
LINE SP. LOCK YES	Setting this item, the value set for vertical spacing cannot be changed by software but only by operator panel.

Page Length

LINE SP. LOCK NO

↑

LENGTH 1 LINE	→ or ←
LENGTH . .. LINES	→ or ←
LENGTH 244 LINES	→ or ←
LENGTH A5	→ or ←
LENGTH A4	→ or ←
LENGTH A3	→ or ←
LENGTH A2	→ or ←
LENGTH LEGAL	→ or ←
LENGTH LETTER	→ or ←

↓

TOP OF FORM 0

These items set the page length for fanfold paper in number of lines depending on the current vertical spacing. For the single sheets the page format can be specified in number of lines or the standard formats LETTER, LEGAL, A2, A3, A4, A5. Default value is **66 lines**.

Top of Form

LENGTH Xx

↑

TOP OF FORM 0	→ or ←
TOP OF FORM ...	→ or ←
TOP OF FORM xxx	→ or ←

↓

SKIPOVER 0

These items set the top of form. The values range between 0 and the page length - 1.

Skip Over Perforation

TOP OF FORM 0

↑

SKIPOVER 0	→ or ←
SKIPOVER ...	→ or ←
SKIPOVER xxx	→ or ←

↓

DRAFT MODE NORM

These items set the skipover perforation. The values range between 0 and the page length - 1.

Draft Print Mode

SKIPOVER 0

↑

DRAFT MODE NORM	→ or ←
DRAFT MODE BEST	→ or ←

↓

QUALITY LQ

DRAFT MODE NORM	The printer performs the draft printing at high speed.
DRAFT MODE BEST	The printer performs the draft printing at low speed to obtain better quality print.

Quality Print Mode

DRAFT MODE NORM

↑

QUALITY LQ	→ or ←
QUALITY HS_ LQ	→ or ←
QUALITY NLQ	→ or ←
QUALITY HS_ NLQ	→ or ←

↓

FONT Draft

QUALITY LQ	The printer performs the Letter Quality printing.
QUALITY HS_ LQ	The printer performs the Letter Quality printing at high speed.
QUALITY NLQ	The printer performs the Near Letter Quality printing.
QUALITY HS_ NLQ	The printer performs the Near Letter Quality printing at high speed.

Font Selection

QUALITY LQ

↑

FONT Draft	→ or ←
FONT Courier	→ or ←
FONT Gothic	→ or ←
FONT OCR-B	→ or ←
FONT OCR-A	→ or ←
FONT Script	→ or ←

↓

PITCH 10 CPI

Selects the fonts. OCR-A is displayed only if a non proportional pitch has been selected.

Pitch Selection

FONT Draft

↑

PITCH 5 CPI	→ or ←
PITCH 6 CPI	→ or ←
PITCH 7.5 CPI	→ or ←
PITCH 8.5 CPI	→ or ←
PITCH 10 CPI	→ or ←
PITCH 12 CPI	→ or ←
PITCH 15 CPI	→ or ←
PITCH 17.1 CPI	→ or ←
PITCH 20 CPI	→ or ←
PITCH 24 CPI	→ or ←
PITCH PROP	→ or ←

↓

PITCH LOCK NO

These items set the horizontal spacing in characters per inch. The PROP item sets proportional character spacing.

Pitch Lock

PITCH 10 CPI

↑

PITCH LOCK NO	→ or ←
PITCH LOCK YES	→ or ←

↓

LEFT MARGIN 0

PITCH LOCK NO	Setting this item, the pitch can be changed by software or operator panel.
PITCH LOCK YES	Setting this item, the pitch can be changed ONLY by operator panel.

Left Margin

PITCH LOCK NO

↑

LEFT MARGIN 0	→ or ←
LEFT MARGIN ...	→ or ←
LEFT MARGIN xxx	→ or ←

↓

RIGHT MARGIN 136

The Left Margin is set in number of columns (depending on the current pitch) starting from the physical left edge.

Right Margin

LEFT MARGIN 0

↑

RIGHT MARGIN. 2	→ or ←
RIGHT MARGIN. ...	→ or ←
RIGHT MARGIN. xxx	→ or ←

↓

SLASH ZERO NO

The Right Margin is set in number of columns (depending on the current pitch) starting from the physical left edge. The default value is **136**.

Zero Character Printing

RIGHT MARGIN 136

↑

SLASH ZERO NO	→ or ←
SLASH ZERO YES	→ or ←

↓

PATH LOWER PUSH

You can select the Zero character printing with or without a slash.

Paper Path Selection

This function defines the default paper path for the current macro.

SLASH ZERO NO

↑

PATH LOWER PUSH	→ or ←
PATH UPPER PUSH (9078D plus only)	→ or ←
PATH MANUAL FORM (9078 plus only)	→ or ←
PATH PUSH PULL	→ or ←
CUT + LOWER PUSH (9078 plus only)	→ or ←
CUT + FRONT PSHPUL (9078 plus only)	→ or ←
PATH ASF 1	→ or ←
PATH ASF 2	→ or ←
PATH ASF 3	→ or ←

↓

TEAR NORMAL

PATH LOWER PUSH	Paper loading with the lower push tractor.
PATH UPPER PUSH	Paper loading with the upper push tractor (9078D plus model only).
PATH MANUAL FORM	Paper loading using the manual single sheet path (9078 plus model only).
PATH PUSH PULL	Paper loading using the lower push tractor and the rear pull tractor.
CUT + LOWER PUSH	Paper loading using the manual paper path in overlay over the paper loaded with the lower push tractor. The paper overlay function must be set to `PAPER OVERLY YES` (9078 plus model only).
CUT + FRONT PSHPUL	Paper loading using the manual paper path in overlay over the paper loaded with the push-pull tractors. The paper overlay function must be set to `PAPER OVERLY YES` (9078 plus model only).
PATH ASF1	Paper loading from the first bin of the ASF, if installed.
PATH ASF2	Paper loading from the second bin of the ASF, if installed.
PATH ASF3	Paper loading from the third bin of the ASF, if installed.

Tear-Off Mode

PATH LOWER PUSH

↑

TEAR NORMAL	→ or ←
TEAR AUTOMATIC	→ or ←
LABEL	→ or ←
TEAR NO	→ or ←
ENABLE CUTTER	→ or ←

↓

VT: FF+CUT

TEAR NORMAL	The Tear-Off Function is performed pressing the ONLINE key when the printer is offline.
TEAR AUTOMATIC	When the printer is not receiving any data, the paper is moved to the Tear-Off position. It is returned to the Tear-Off position as soon as it receives printing data.
LABEL	This item must be set when printing on labels, in order to avoid paper jams. The paper does not execute any backward movement. When pressing the PARK key, the paper is ejected.
TEAR NO	The paper does not execute any backward movement.
ENABLE CUTTER	This selection enables the cutter option and appears only, if the cutter option is installed.

See also "How to Use the Tear-Off Function" later in this chapter.

Cutter mode

This selection appears only if the cutter option is installed.

TEAR NORMAL

↑

VT: FF + CUT	→ or ←
VT: LF+CUT	→ or ←
VT: VT	→ or ←
CUT EACH PAGE	→ or ←
CUT PAPER CHANGE	→ or ←

↓

STRONG IMPACT

VT: FF + CUT	When the printer receives a VT command, it performs a form feed and then cuts the paper.
VT: LF + CUT	When the printer receives a VT command, it performs a line feed and then cuts the paper.
VT: VT	When the printer receives a VT command, it performs a vertical tabulation.
CUT EACH PAGE	Selecting this item, the printer cuts the paper at the end of each page according to the selected page length.
CUT PAPER CHANGE	Selecting this item, the printer cuts the paper when it receives a paper path change command and passes over to the new paper path.

Print Impact Strength

VT: FF + CUT

↑

STRONG IMPACT	→ or ←
SOFT IMPACT	→ or ←

↓

PERFOR. SAFE NO

STRONG IMPACT	The impact strength of the print head is set for printing on multicopy paper.
SOFT IMPACT	The impact strength of the print head is set for printing on single paper or few copies. The printing noise is reduced.

Paper Perforation

This function allows to move the print head aside the paper when the fanfold paper perforation passes between the mylar and the print bar, to avoid paper jams. If the use of single sheets is selected, this item is not displayed.

STRONG IMPACT

↑

PERFOR. SAFE NO	→ or ←
PERFOR. SAFE YES	→ or ←

↓

AUTOGAP 0

PERFOR. SAFE NO	The function is disabled. The print head remains in its position, when the perforation of the paper passes.
PERFOR. SAFE YES	The function is enabled. The print head is moved aside, when the perforation passes.

Adjusting the Print Head Distance

PERFOR. SAFE NO

↑

AUTOGAP -5	→ or ←
AUTOGAP ...	→ or ←
AUTOGAP +3	→ or ←
MANUAL GAP	→ or ←
FIXED GAP 0.3	→ or ←
FIXED GAP ...	→ or ←
FIXED GAP 9.3	→ or ←

↓

TUNING.HORIZ 0

AUTOGAP xxx	Selecting one of these values sensing the paper thickness. Negative values reduce the distance between the print head and the paper. Default value is **AUTOGAP 0**.
MANUAL GAP	Selecting this item, the print head must be adjusted manually.
FIXED GAP xxx	Selecting one of these values the printer adjusts the print head gap to a fixed distance.

Horizontal Character Tuning

AUTOGAP 0

↑

TUNING.HORIZ 0	→ or ←
TUNING.HORIZ ...	→ or ←
TUNING.HORIZ 60	→ or ←

↓

TUNING.VERT 0

These values adjust the distance between the left paper margin and the first print character. The values correspond to 1/120 inch units, i.e. the tuning ranges between 0 and 0,5 inch.

Vertical Character Tuning

TUNING.HORIZ 0

↑

TUNING.VERT. -30	→ or ←
TUNING.VERT. ...	→ or ←
TUNING.VERT. 360	→ or ←

↓

MACRO -> MFG NO

These values adjust the distance between the top paper margin and the first printable line. The values correspond to 1/180 inch units, i.e. the tuning ranges between -1/6 and 2 inch. **0** is the default value.

Resetting the Macro Parameters to the Factory Defaults

TUNING.VERT. 0

↑

MACRO -> MFG NO	→ or ←
MACRO -> MFG YES	→ or ←

↓

NEXT MACRO? NO

MACRO -> MFG NO	The new values set for the macro parameters will be the used.
MACRO -> MFG YES	The values set for the macro parameters will be reset to their factory defaults.

Selecting Another Macro

MACRO -> MFG NO

↑

NEXT MACRO? NO → or ← NEXT MACRO? YES

↓ ↓

CONFIG MENU NO MACRO # 1

To pass over to another macro, select `NEXT MACRO YES`. Pressing the ↓ or ↑ key the item `MACRO#1` is displayed, then press the → key to pass over to `MACRO#2` (`MACRO CHANGING` is displayed) .

When passing over from one macro to another, the fanfold paper loaded from the paper path, selected in the previous macro, will be automatically parked (`TEAR IF NECESS/PARK PAPER` is displayed). Tear off this fanfold paper and press the PARK key.

You can now set the parameters for Macro#2 as described above. In this way you prepare the second printing environment .

Passing over from one macro to the other then sets two different printing environments.

Passing over to the Power-On Configuration

At this point of the menu, it is possible to pass over to the Power On Configuration Functions Setting.

NEXT MACRO NO
↑
CONFIG MENU NO → or ← CONFIG MENU YES
↓ ↓
HEX DUMP NO PARALL INTERFACE

These items are self-explaining.

Hexadecimal Dump

CONFIG MENU NO
↑
HEX DUMP NO → or ← HEX DUMP YES
↓
TEAR ADJUST: xxxx

If you select `HEX DUMP YES`, press the PROGRAM key to set this item. The hexadecimal printing continues, until the `HEX DUMP NO` item is selected, entering again into the Program Setup.

Adjusting the Tear-Off Position

HEX DUMP NO

↑

TEAR ADJUST: - 30	→ or ←
TEAR ADJUST: ...	→ or ←
TEAR ADJUST: +360	→ or ←

↓

CUT ADJUST xxx

TEAR ADJUST: xxxx — These values adjust the distance between the Tear-Off Perforation and the Tear-Off Bar. The values correspond to 1/180 inch units, i.e. the tuning ranges between -1/6 and 2 inch. **0** is the default value.

See also "How to Use the Tear-Off Function", later in this Chapter.

Adjusting the Cut Position

This selection appears only if the cutter option is installed.

TEAR ADJUST xxx

↑

CUT ADJUST: - 30	→ or ←
CUT ADJUST: ...	→ or ←
CUT ADJUST: +360	→ or ←

↓

STORE? QUIT

CUT ADJUST: xxxx — These values adjust the position in which the paper is cut. The values correspond to 1/180 inch units, i.e. the tuning ranges between -1/6 and 2 inch. **0** is the default value.

Storing the values

CUT ADJUST: xxxx

↑

STORE? QUIT	→ or ←
STORE? SAVE	→ or ←
STORE? CURRENT	→ or ←

PROG

EXIT

STORE? QUIT	This setting does not save any of the new values set. The values set previously will be used.
STORE? SAVE	The values set are stored permanently (in the NVM) and will be used until they are changed by the operator.
STORE? CURRENT	The values set are valid until the printer is turned off. When you turn the printer on again, the values set in the preceding menu setup will be used.

At this point the Program Configuration Setup is finished. You exit pressing the PROGRAM key.

How to Select the Paper Path

The paper can be loaded into the printer using different paper paths. The messages indicating the paper paths are shown only if the corresponding loading device is installed on the printer.

Proceed as follows:

1. Press the READY key to put the printer offline (the READY indicator is unlit).
2. Press the PATH key, according to the installed devices the following messages are displayed:

LOAD LOWER PUSH	For the lower push tractor paper path.
LOAD UPPER PUSH	For the upper push tractor paper path (9078D Model only).
LOAD MANUAL	For the manual cut sheet paper path (9078 Model only).
LOAD PUSH-PULL	For the paper path using the lower push tractor and the optional rear pull tractor.
LOAD ASF1	Loading a cut sheet from the first bin of the automatic sheet feeder.
LOAD ASF2	Loading a cut sheet from the second bin of the automatic sheet feeder.
LOAD ASF3	Loading a cut sheet from the third bin of the automatic sheet feeder.

- To load fanfold paper go to "Loading Paper Using the Lower Tractor" or "Loading Paper Using the Upper Tractor".
- To load manual cut sheets go to "Loading Cut Sheets".
- For using paper with the Automatic Sheet Feeder option, consult the documentation you receive together with the option.

When a new paper path is selected, the paper loaded in the printer is automatically parked/ejected.

How to Use the Tear-Off Function

This function is used to match the paper perforation with the tear-off bar. For this function the following values must be set:

Selection of the Paper Size

1. Press the PROGRAM key when the printer is disabled or enabled without printing to enter the Program Setup.

2. Press the ↓ key and the following message appears:

```
USER MACRO
```

3. Press the → key to select the macro for which you want to set the paper size (MACRO#1, MACRO#2, MACRO#3 or MACRO#4).

4. Once the desired macro is displayed press the ↓ key until the following parameter is displayed:

```
LENGTH xx
```

5. Press the → or ← key until the desired page size is displayed.

6. Press again the PROGRAM key to exit the menu end set the new value.

Adjusting the Tear-Off Position

The default value for the Tear-Off Function is `TEAR NORMAL`. To check the Tear-Off Position proceed as follows:

1. To move the paper to the Tear-Off position, press the ON LINE key when the printer is disabled or enabled without printing.
2. Check if the paper perforation matches the tear-off bar on the printer.

If it does not:

1. Press the PROGRAM key to enter the *Program Setup*.
2. Press the ↓ key until the following message appears:

USER MACRO

3. Press the → key until the macro for which you want to adjust the tear-off is displayed (`#1`, `#2`, `#3` or `#4`):

MACRO # x

4. Press the ↓ key until the following message is displayed:

TEAR ADJUST xxx

5. Press the → or ← key to scroll the values of this function.

The values below 0 move the tear-off position downwards, values above 0 move the paper upwards. The values can be set between -30 and 360 at 1/180 inches (-1/6 to 2 inches).

6. When the desired value is displayed, press the PROGRAM key. The storage options are displayed.
7. Press the → or ← key, until the following message is displayed:

STORE? SAVE

8. Press the PROGRAM key to exit from the menu.

Selection of the Tear-Off Mode

It is now possible to select the Tear-Off Mode.

1. Press the PROGRAM key when the printer is disabled or enabled without printing to enter the *Program Setup*.
2. Press the ↓ key. The following message is displayed:

USER MACRO

3. Press the → key to select the macro for which you want to set the tear-off mode `MACRO#1`, `MACRO#2`, `MACRO#3` or `MACRO#4`).
4. Press the ↓ key, until the following message is displayed:

TEAR NORMAL

Pressing the → or ← key it is now possible to decide how to execute the tear off function:

TEAR NORMAL	Pressing the ON LINE key the paper is moved to the tear-off position. Pressing again the ON LINE key, the paper is moved to the printing position. If the ON LINE key is not pressed for 10 seconds, the paper moves automatically back to the print position.
TEAR AUTOMATIC	If the printer is not receiving data, the paper is moved automatically to the tear position.
LABEL	The ON LINE key is disabled for the tear-off function. This selection is useful when printing on labels. Pressing the PARK key, the printer ejects the paper towards the back of the printer.
TEAR NO	The Tear-Off function is disabled

5. Press the PROGRAM key to exit the setup.

How to Lock/Unlock the Access to the Printer Setups

To prevent not expertise persons changing the printer setup parameters, it is possible to lock/unlock the access to the printer setups as follows:

- Press ON LINE, MACRO and SHIFT keys at the same time and keep them pressed while powering the printer on. As soon as these keys are released, the following messages will be displayed:

9078 plus	or	9078D plus

then,

LOCKED MENU

Now the access to the printer setups is locked. If the PROGRAM key is pressed, the LOCKED MENU message is displayed (the PROGRAM key is disabled).

- If you decide to unlock the printer setup, turn the printer off, then press the ON LINE, MACRO and SHIFT keys at the same time and keep them pressed while powering the printer on again. As soon as these keys are released, the following messages will be displayed:

9078 plus	or	9078D plus

then,

UNLOCKED MENU

How to Handle the Paper Parking

According to the setting of the TEAR item in the Program Setup, the paper parking procedure is performed in different ways. See the following description:

If TEAR NO is selected:

- When the paper is positioned at the first printable line and the paper path is changed (changing the Macro or pressing the PATH key) or the PARK key is pressed, the printer performs automatically the parking procedure.

- If at least one line has been printed, or the paper has been fed forward at least 1 line and the paper path is changed (changing the Macro or pressing the PATH key) or the PARK key is pressed, the display shows TEAR IF NECESS./PARK PAPER.
  If the paper to be parked is longer than 18" tear it off and press the PARK key again to perform the parking procedure.

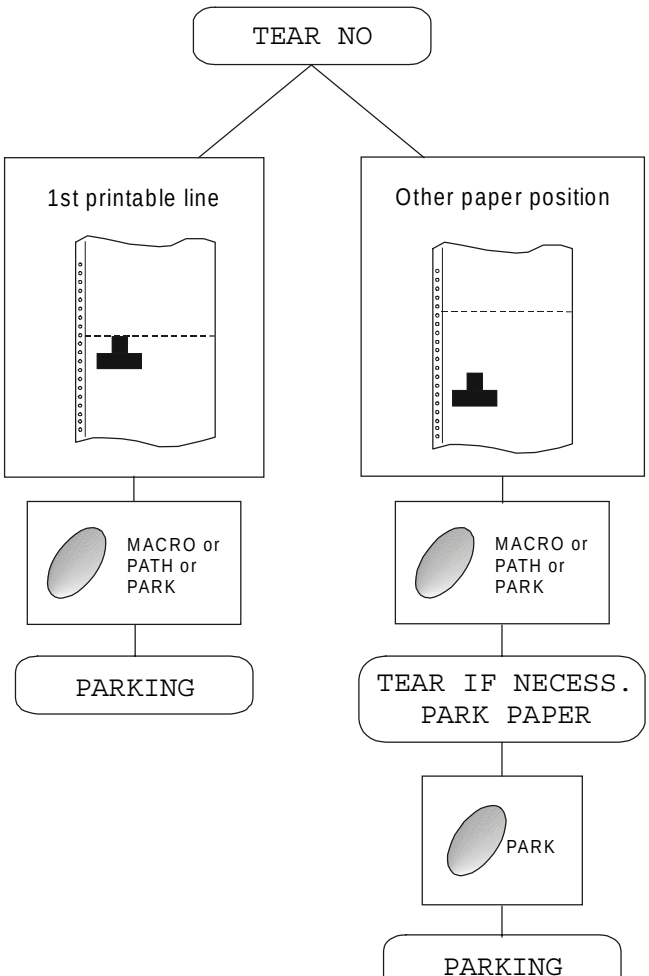

If TEAR NORMAL is selected:

- When the paper is positioned at the first printable line and the paper path is changed (changing the Macro or pressing the PATH key) or the PARK key is pressed, the printer performs automatically the parking procedure.

- If at least one line has been printed, or the paper has been fed forward at least 1 line and the paper path is changed (changing the Macro or pressing the PATH key) or the PARK key is pressed, the paper is moved to the tear-off position and the display shows TEAR IF NECESS./PARK PAPER. If the paper to be parked is longer than 18" tear it off and press the PARK key again to perform the parking procedure.

- If the ON LINE key is pressed after a print job and the paper has moved in the tear-off position, when pressing the PARK key the printer performs automatically the parking procedure.

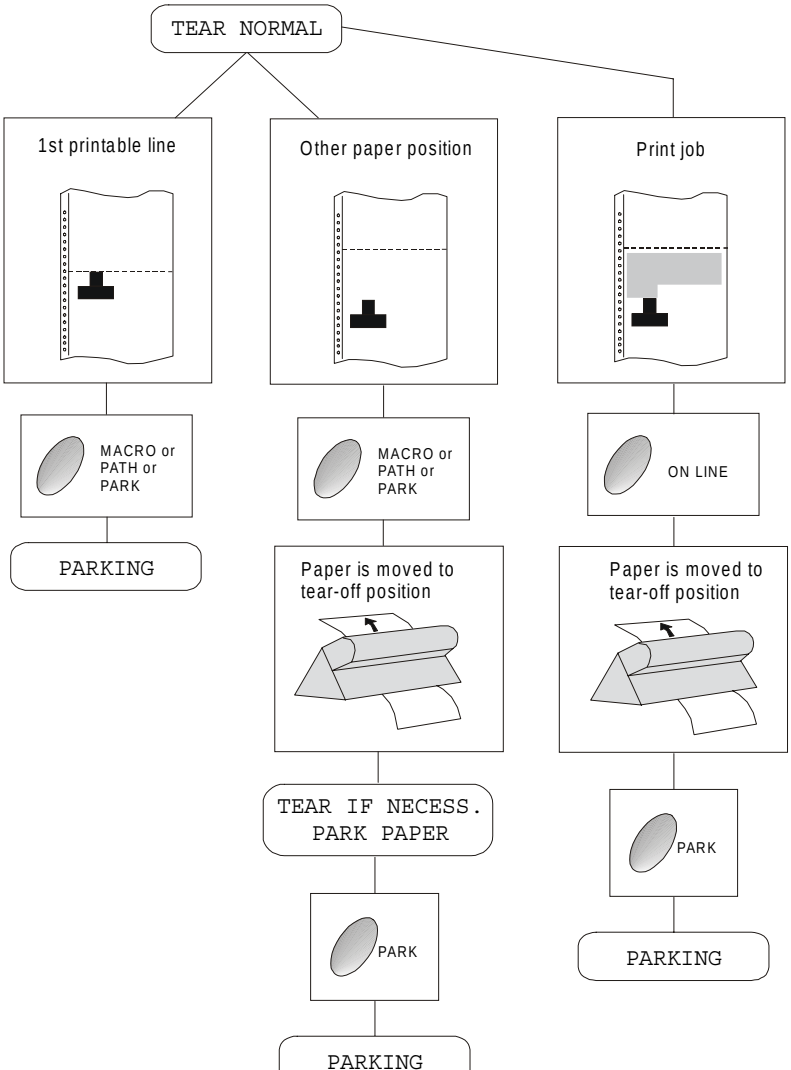

If TEAR AUTOMATIC is selected:

- When the paper is positioned at the first printable line and the paper path is changed (changing the Macro or pressing the PATH key) or the PARK key is pressed, the printer performs automatically the parking procedure.
- If at least one line has been printed, or the paper has been fed forward at least 1 line and the paper path is changed (changing the Macro or pressing the PATH key) or the PARK key is pressed, when the paper did not yet move to the tear position, the display shows TEAR IF NECESS./ PARK PAPER. If the paper to be parked is longer than 18" tear it off and press the PARK key again to perform the parking procedure.
- If at least one line has been printed, or the paper has been fed forward at least 1 line and the paper path is changed (changing the Macro or pressing the PATH key) or the PARK key is pressed when the paper is already in the tear position, the printer performs automatically the parking procedure.

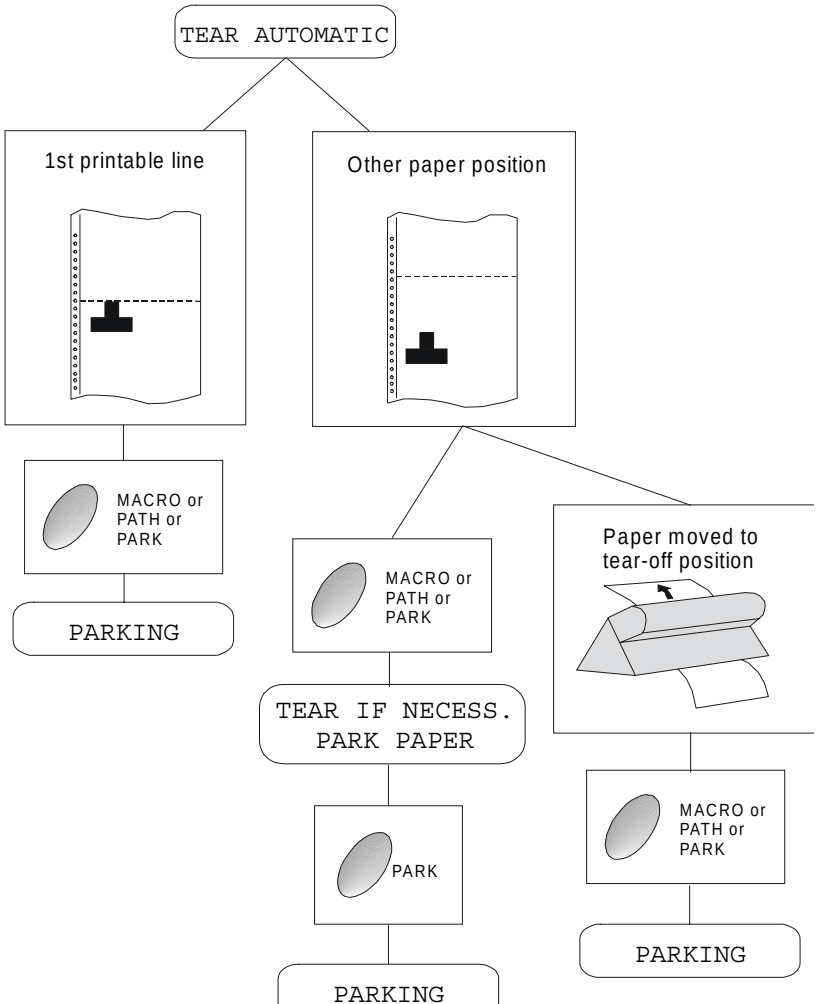

If LABEL is selected:

- When the paper is positioned at the first printable line and the paper path is changed (changing the Macro or pressing the PATH key), or the PARK key is pressed the printer automatically ejects the paper towards the rear of the printer.

- If at least one line has been printed, or the paper has been fed forward at least 1 line and the paper path is changed (changing the Macro or pressing the PATH key) or the PARK key is pressed, the display shows TEAR IF NECESS./EJECT PAPER. If the paper to be ejected is longer than 18" tear it off and press the PARK key again to perform the paper ejection.

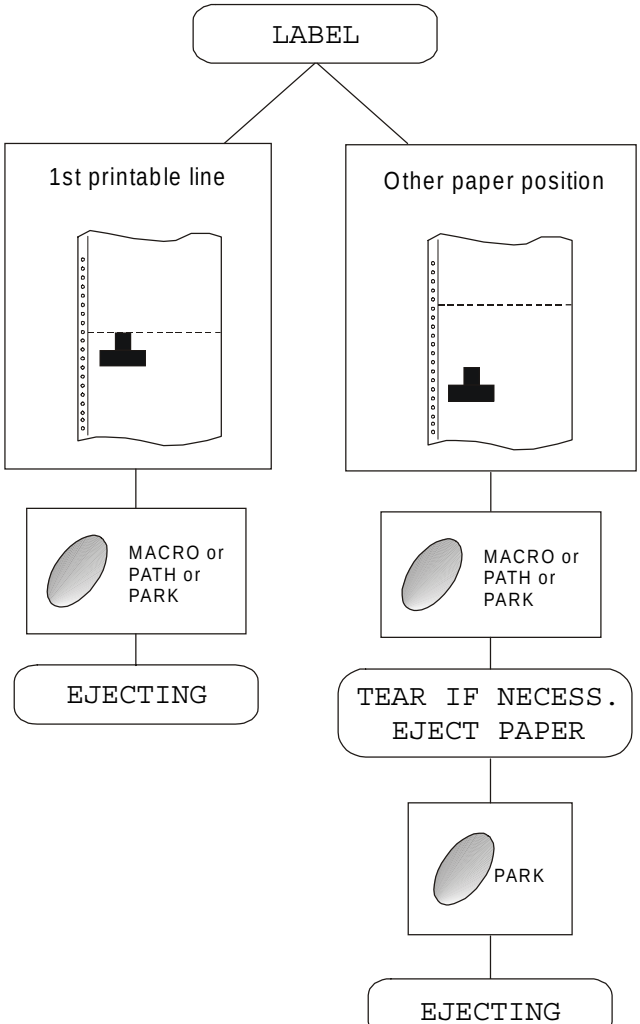

If at power on the paper is already loaded in a paper path that is different to the paper path used by the macro which is valid at power-on, independently from the setting of the TEAR function, the display shows TEAR IF NECESS./EJECT PAPER. If the paper to be ejected is longer than 18" tear it off and press the PARK key again to perform the paper ejection.

In all the above cases the parking procedure may be interrupted pressing the SHIFT key. The display shows OPER. INTERRUPTED.

If in any of the above cases you do not tear off the paper and the printer is not able to park it, because it is too long, the display shows TEAR OFF PAPER/PARK PAPER. Tear off the paper and press again the PARK key.

During the parking procedure the display shows PARKING. If the printer is ejecting the paper (see LABEL selection) the display shows EJECTING.

Paper Handling

Paper Paths

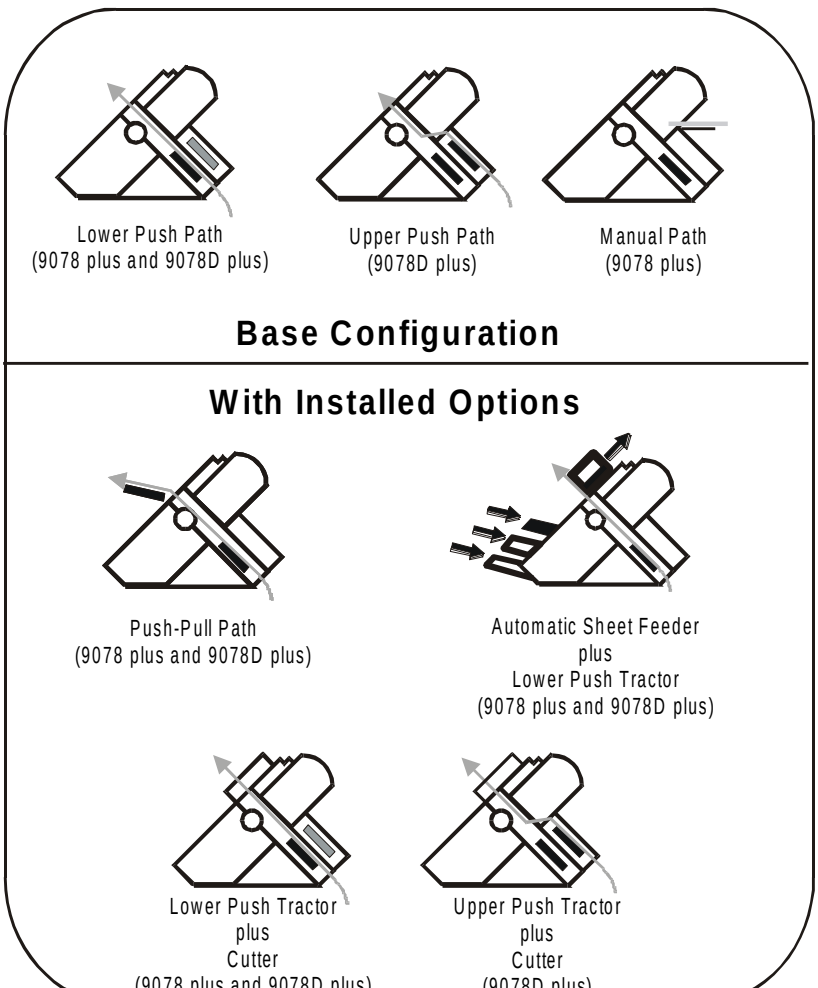

Paper Specifications

It is important to use the correct paper for obtaining the best performance. See the information table below:

Fanfold Paper (9078 plus and 9078D plus models)

Loading Mode	Lower Tractor	Upper Tractor (9078D plus only)	Push-Pull (option)
Width	76 to 432 mm 3 to 17 inches	76 to 432 mm 3 to 17 inches	76 to 432 mm 3 to 17 inches
Length	76 to 609 mm 3 to 24 inches	76 to 609 mm 3 to 24 inches	76 to 609 mm 3 to 24 inches
Thickness	max.0.635 mm 0.025 inches	max. 0.635 mm 0.025 inches	max. 0.635 mm 0.025 inches
Copies	1 + 7	1 + 7	1 + 7
Weight (g/m^2):			
- Original	55 to 150	55 to 150	55 to 150
- Other sheets	45 to 75	45 to 75	45 to 75
- Carbon Paper	35	35	35

Envelopes (9078 plus model only)

Loading Mode	Manual Feeding
Length	102 to 559 mm (4 to 22 inches)
Thickness	Max. variations 3 mm (0.013 inches)
Types	USA 6 (165 x 92 mm)
	USA 10 (241 x 105 mm)

Cut Sheets (9078 plus model only)

Loading Mode	Manual Loading		
Width	114 to 432 mm (4.5 to 17 inches)		
Length	101 to 559 mm (4 to 22 inches)		
Weight	Original:	50-120 g/m^2	
	Multiparts:	First Sheet:	55-75 g/m^2
		Other Sheets:	45 - 75 g/m^2
		Carbon Paper:	14 - 35 g/m^2
Formats	A5	149 x 210 mm	Portrait & Landscape
	A4	210 x 297 mm	Portrait & Landscape
	A3	297 x 420 mm	Portrait & Landscape
	A2	420 x 554 mm	Portrait
	Letter	8.5 x 11 inches	Portrait & Landscape
	Legal	8.5 x 14 inches	Portrait & Landscape
	Executive	7.25 x 10.5 inches	Portrait & Landscape
Thickness	max. 0.635 mm (0.025 inches)		
Copies	1 Original + 7 Copies		

Cut Sheets

Cut Sheets Loading Modes

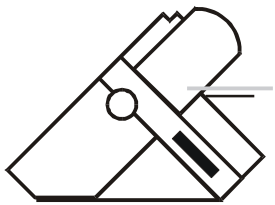

9078 plus model

Cut sheet loading mode is only available for the 9078 plus model.

Cut sheets can be loaded *manually*, one at a time using the front manual paper path (manual or automatic loading) or automatically using the ASF option for large quantities of paper.

Inserting a cut sheet, the fanfold paper is automatically parked with a reverse movement (if the overlapping is not selected).

Loading Cut Sheets

1. Lift the cut sheets support until it locks in horizontal position.

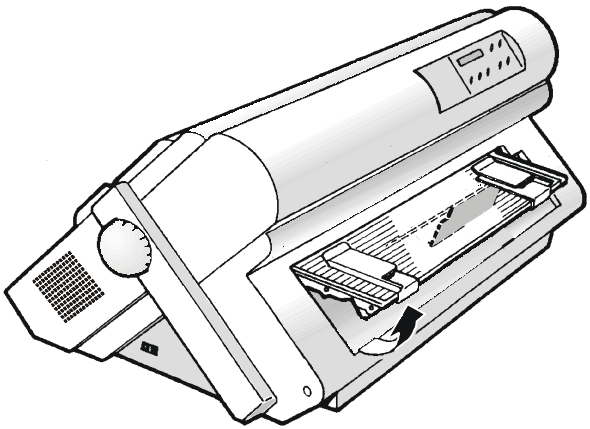

2. Position the left paper guide on the cut sheet support for the first printing column (position 0).

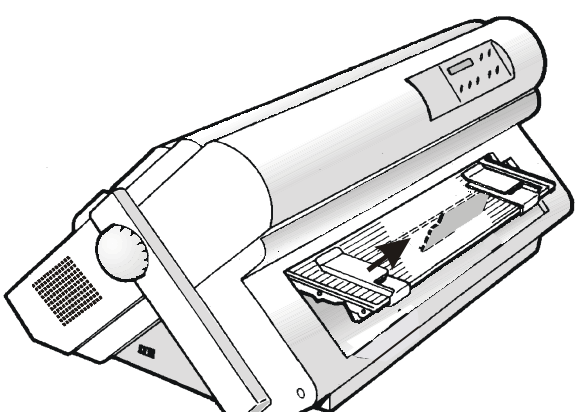

3. Insert a cut sheet along the left paper guide. Match the right paper guide with the sheet margin.

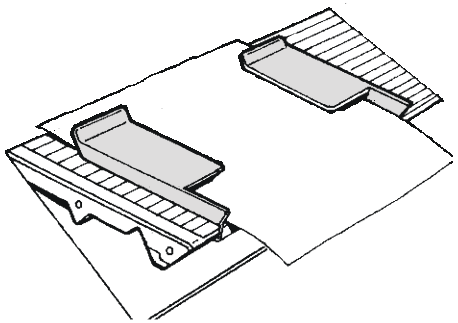

4. The loading mode of the cut sheet depends on the value set for the `QUICK` function in the Power-On Configuration:

Manual loading mode (`QUICK NO`)	Make sure that the printer is disabled. Insert a cut sheet onto the front paper support and press the LOAD/FF key to feed the paper. Press the ON LINE key to enable the printer.
Automatic loading mode (`QUICK YES`)	Insert a cut sheet onto the front paper support, the paper will be loaded automatically after 2 seconds. The LOAD/FF key can be used to load the paper into the printer, before the 2 seconds have passed.

5. To lower the paper feed support, free the paper support holder below the support and replace the support in its initial position.

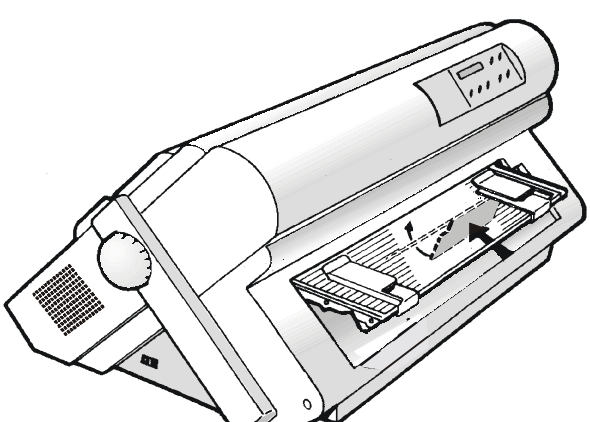

Fanfold Paper

Loading Paper Using the Lower Tractor

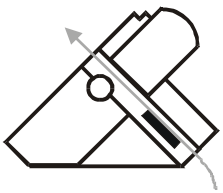

9078 plus model

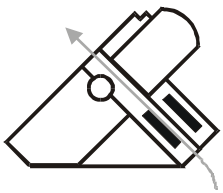

9078D plus model

If your printer is the 9078 plus model, make sure that the cut sheets support is closed before loading the fanfold paper.

1. To select the lower tractor paper path press the PATH key until the display shows:

   LOAD LOWER PUSH

   - If you have been using a different path, the display shows:

     PATH CHANGING

   - If you have been using fanfold paper in the upper tractor paper path (9078D model only), the printer automatically starts the parking procedure. The display shows alternately:

     TEAR IF NECESS. and PARK PAPER

   - Tear off the fanfold loaded with the upper tractor (if it is longer than 18 inches) and press the PARK key. The display shows:

     PARKING

     followed by

     LOAD LOWER PUSH

2. Open the tractor area cover turning is upwards and lay it on the top of the printer.

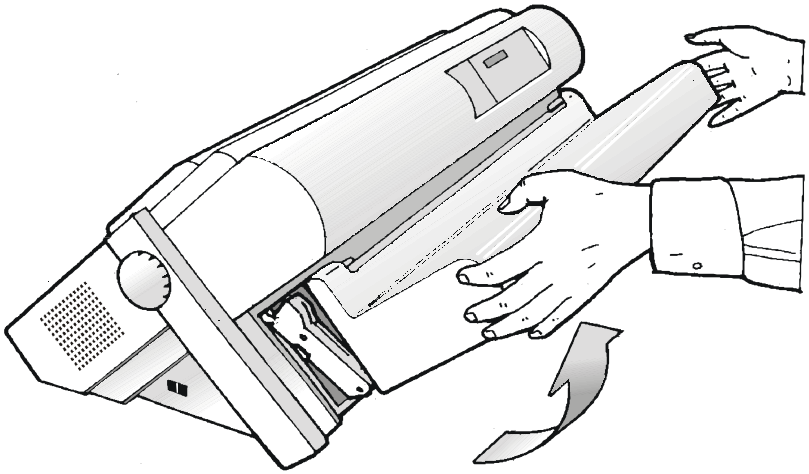

- If your printer is the 9078D plus model and it is installed the upper tractor, rotate the upper tractor out of the printer.

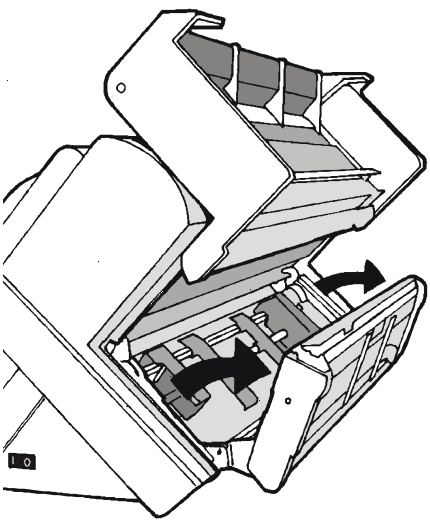

3. Unlock the sprockets of the Lower tractor moving the sprocket levers up. Slide the left sprocket to the first printing column.

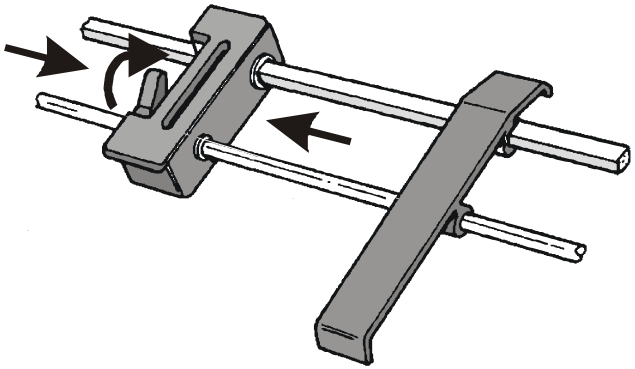

4. Space the paper guides along the tractor bar. Open the sprocket covers of the left and right sprocket

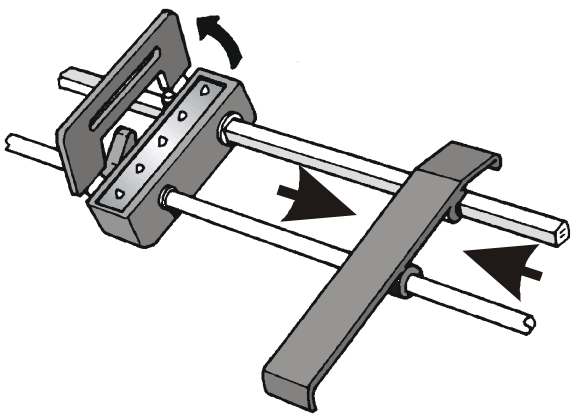

- If your printer is the 9078D plus model, insert the fanfold paper between the lower and the upper tractor.

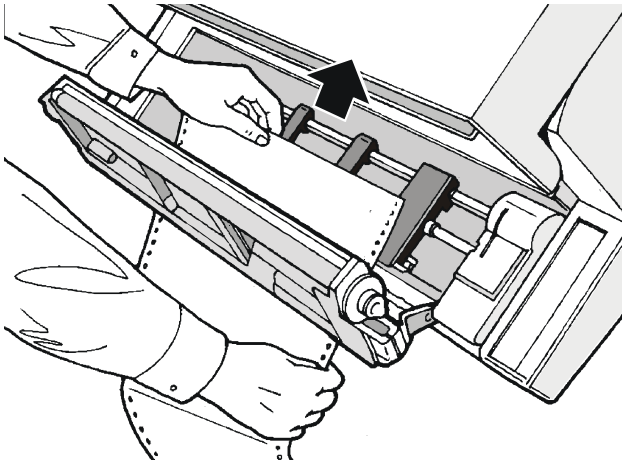

5. Hold the fanfold paper in front of the sprockets and insert the paper perforation on the left sprocket pins and close the sprocket cover.

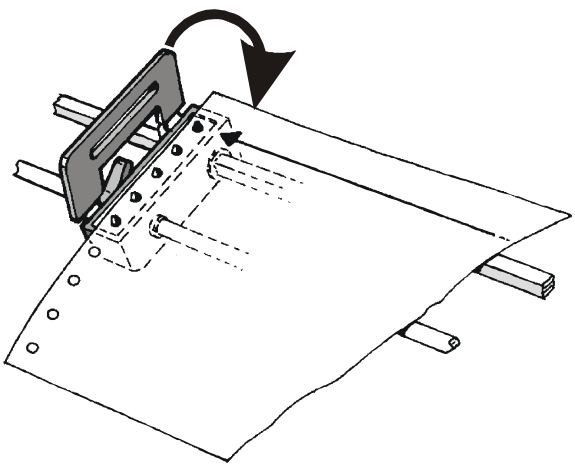

6. Insert the paper on the right sprocket pins, make sure the paper goes under the paper sensor and close the sprocket cover.

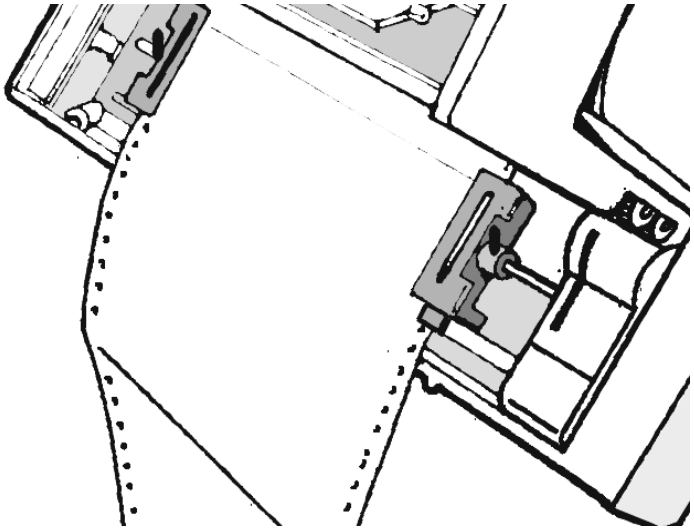

7. Match the left sprocket for the first printing position with the ninth position and lock it in place. Adjust the right sprocket gently to remove slack from the paper.

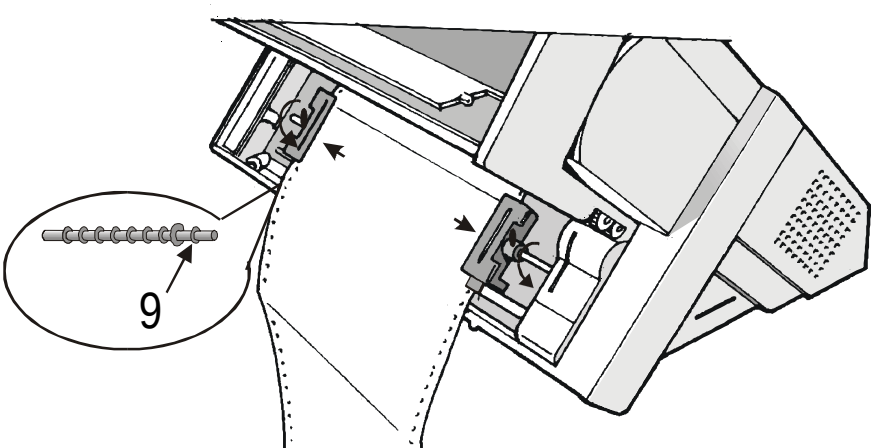

- If your printer is the 9078D plus model, reposition the upper tractor in its initial position

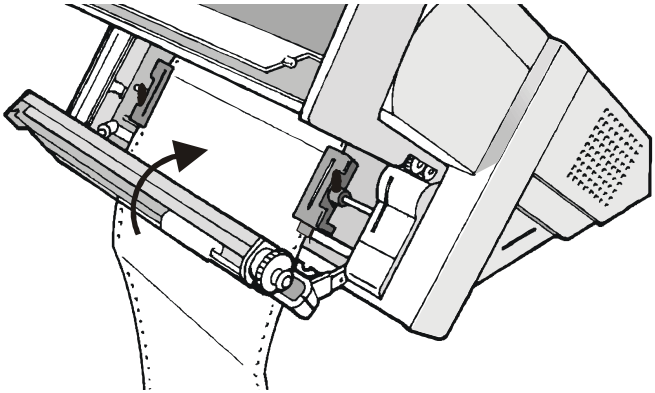

8. Close the tractor area cover. Press the LOAD/FF key to load the paper into the printer.

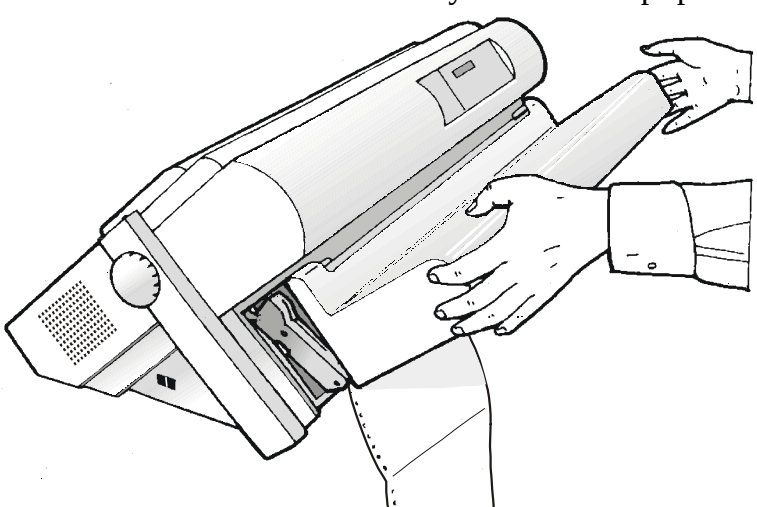

9. The paper must be loaded as shown in figure (i.e. 9078D plus model).

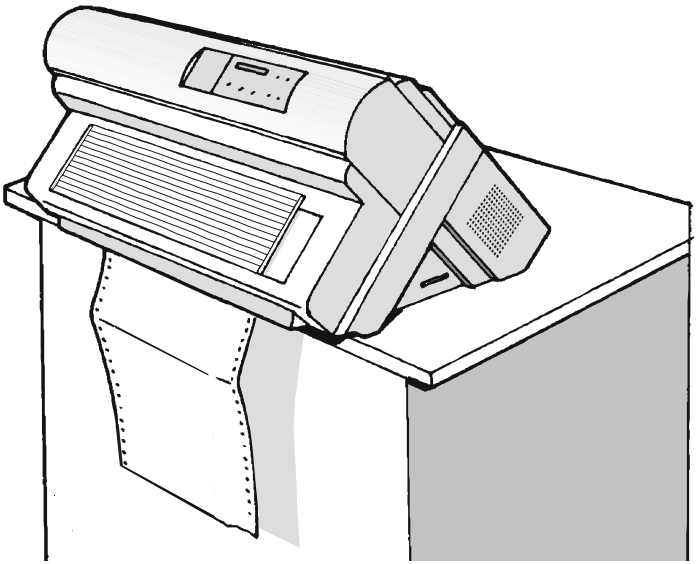

Loading Paper Using the Upper Tractor

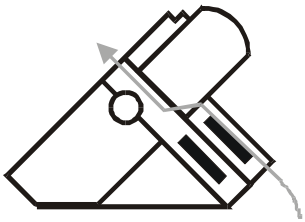

9078D plus model

Fanfold paper loading mode through the upper tractor is only available for the 9078D plus model. To load paper in this way, it is necessary to install the upper tractor. See before "Upper Push Tractor Installation" section.

1. To select the upper tractor paper path press the PATH key until the display shows:

```
LOAD UPPER PUSH
```

- If you have been using a different path, the display shows:

```
PATH CHANGING
```

- If you have been using fanfold paper in the lower tractor paper path, the printer automatically starts the parking procedure. The display shows alternately:

```
TEAR IF NECESS.
```

and

```
PARK PAPER
```

- Tear off the fanfold loaded with the lower tractor (if it is longer than 18 inches) and press the PARK key. The display shows:

```
PARKING
```

followed by

```
LOAD UPPER PUSH
```

2. Open the tractor area cover turning is upwards and lay it on the top of the printer.

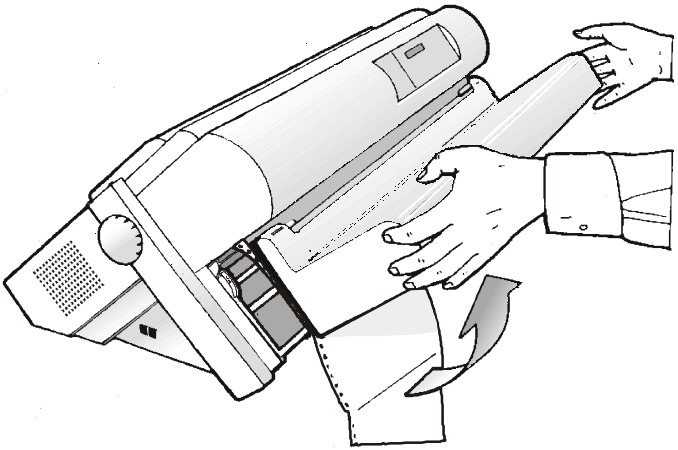

3. Unlock the upper tractor sprockets moving the sprocket levers up. Slide the left sprocket to the first printing column.

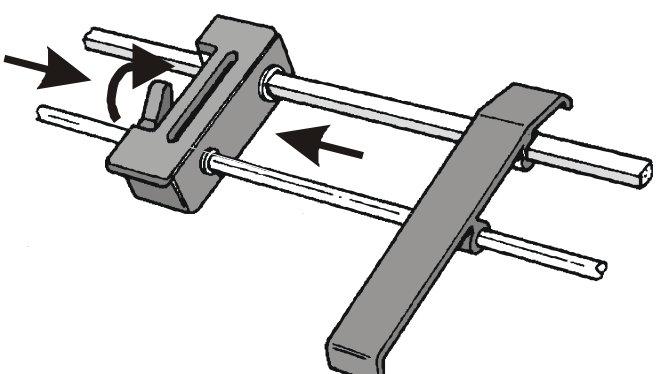

4. Space the paper guides along the tractor bar. Open the sprocket covers of the left and right sprocket.

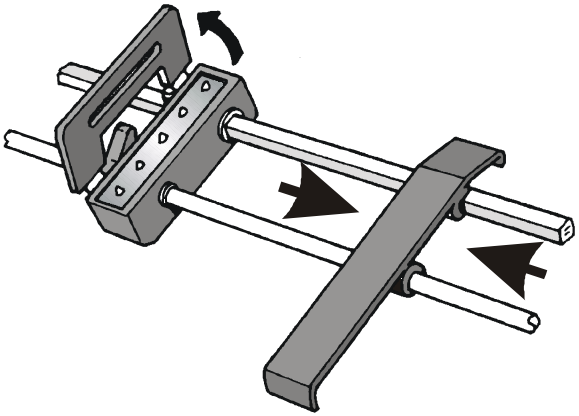

5. Hold the fanfold paper in front of the sprockets and insert the paper perforation on the left sprocket pins and close the sprocket cover.

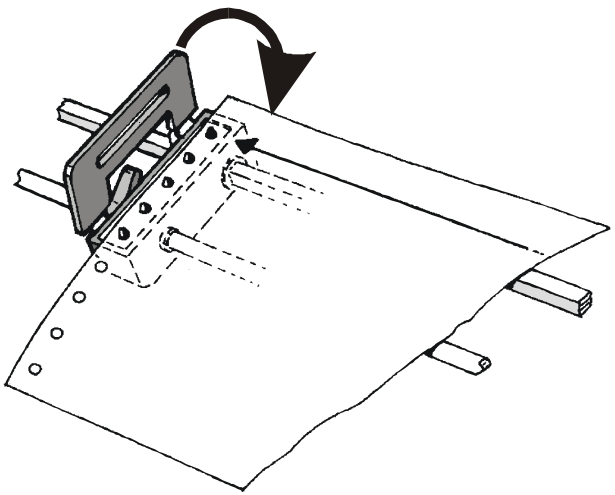

6. Insert the paper on the right sprocket pins, make sure the paper goes under the paper sensor and close the sprocket cover.

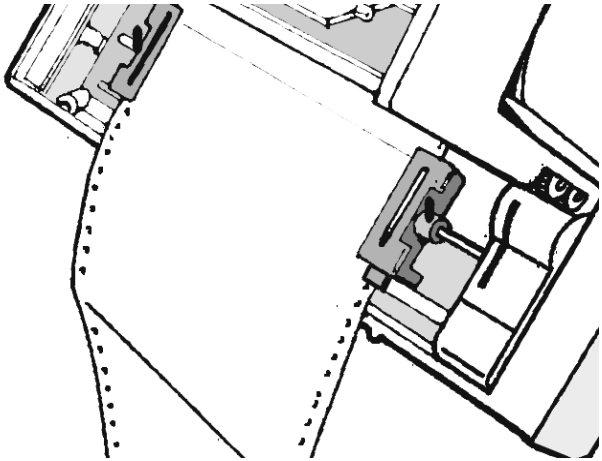

7. Position the left sprocket for printing and lock it in place. Adjust gently the right sprocket to remove slack from the paper.

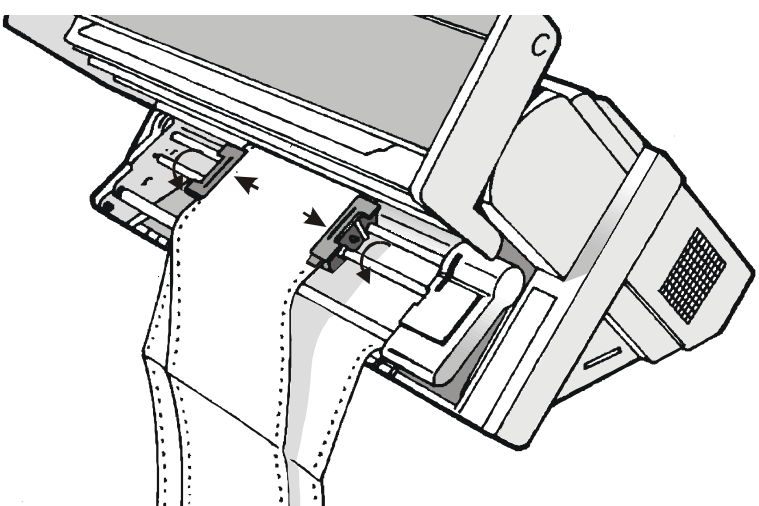

8. Close the tractor area cover. Press the LOAD/FF key to load the paper into the printer.

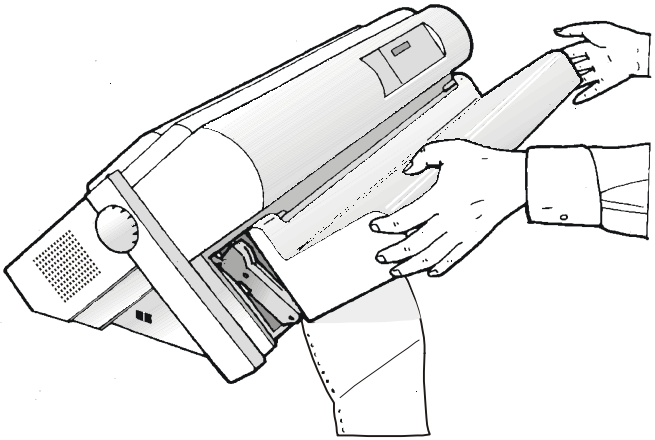
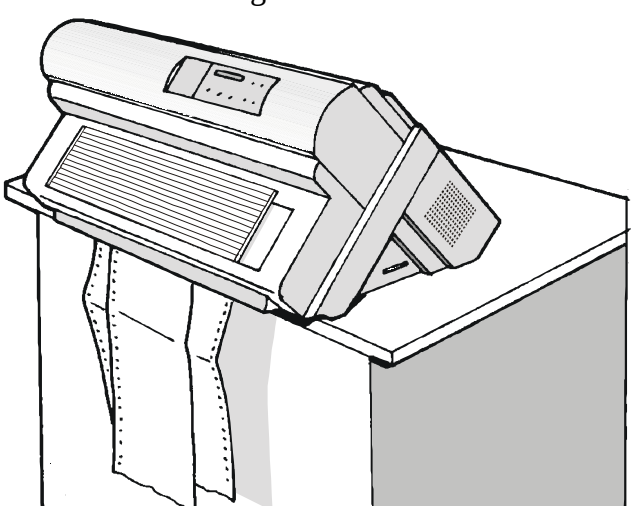
9. The paper must be loaded as shown in figure.