Loading Paper Using the Lower Push Tractor and the Rear Pull Tractor (option)

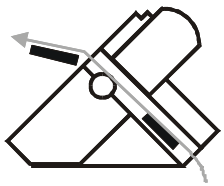

9078 plus model

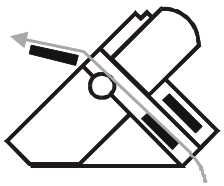

9078D plus model

For loading paper in this way, it is necessary to install the optional rear pull tractor. See later "Options" section.

With this paper path configuration paper is loaded contemporaneously with the lower front push tractor and the rear pull tractor. In this way it is possible to handle stronger paper.

Once the rear pull tractor is installed, the fanfold paper can be loaded only in push-pull mode.

1. To select the push-pull tractor paper path press the PATH key until the display shows:

```
LOAD PUSH-PULL
```

- If you have been using a different path, the display shows:

```
PATH CHANGING
```

- If you have been using fanfold paper in the upper tractor paper path, the printer automatically starts the parking procedure. The display shows alternately:

```
TEAR IF NECESS.
```

and

```
PARK PAPER
```

- Tear off the fanfold loaded with the upper tractor (if it is longer than 18 inches) and press the PARK key. The display shows:

PARKING

followed by

LOAD PUSH-PULL

2. To load the fanfold paper on the lower push tractor, follow the sequence Loading Paper Using the Lower Tractor described before.

3. Take up the slack of the paper exiting from the rear paper slot and rotate the sprocket bar to align the sprocket pins of the rear tractor with the paper perforation.

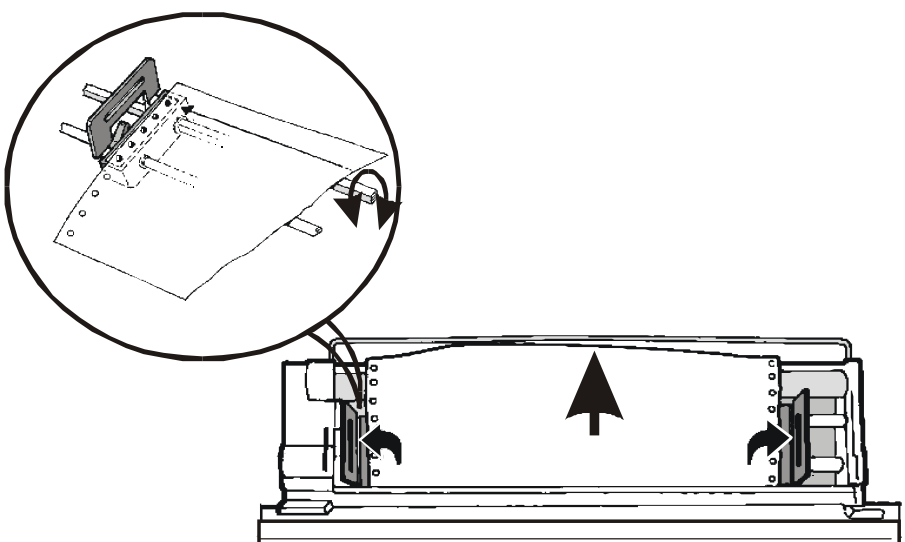

4. Lock the sprocket covers and lower the sprocket levers.

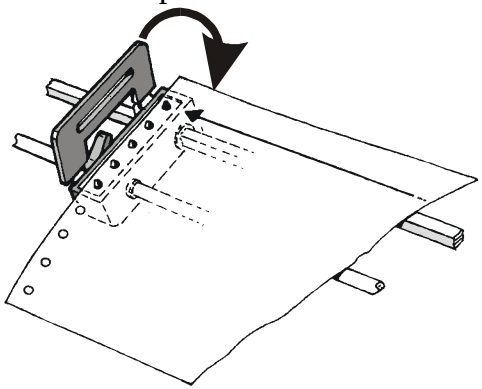

5. Press the ON LINE key to confirm that the paper loading is finished. The rear tractor engages.

6. The figure shows the correct paper loading.

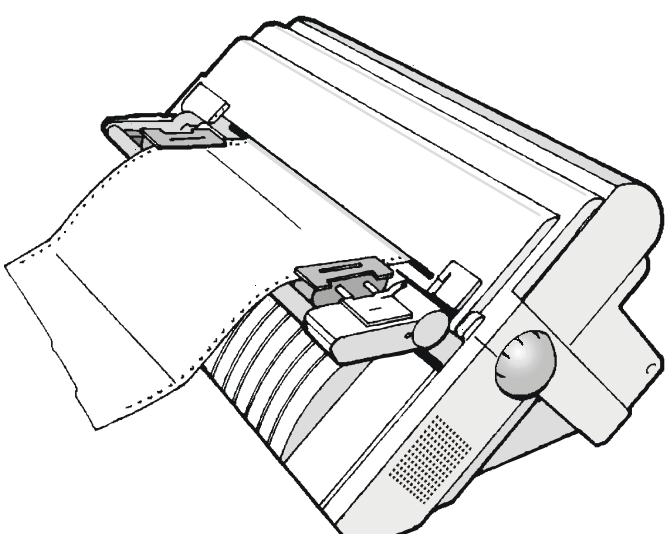

Cleaning the Printer

Make sure the printer has been turned off for at least 15 minutes before starting any cleaning operations.

Periodic cleaning will help keep your printer in top condition so that it will always provide optimal performance.

- Use a neutral detergent or water solution on a soft cloth to clean dirt and grease from the cabinet of the printer.
- Do not use an abrasive cloth, alcohol, paint thinner or similar agents because they may cause discoloration and scratching.
- Be especially careful not to damage the electronic and mechanical components.

Replacing the Ribbon Cartridge

1. Make sure that the printer is turned off for at least 15 minutes.

Pay attention to the print head because it becomes hot during operation.

2. Open the top printer cover.
3. Slide the ribbon guide out of the print head. If the color kit is installed on the printer, unlock the white slider pressing and holding the lever on the slider towards the back of the printer and contemporaneously lifting the slider off the color mechanism.

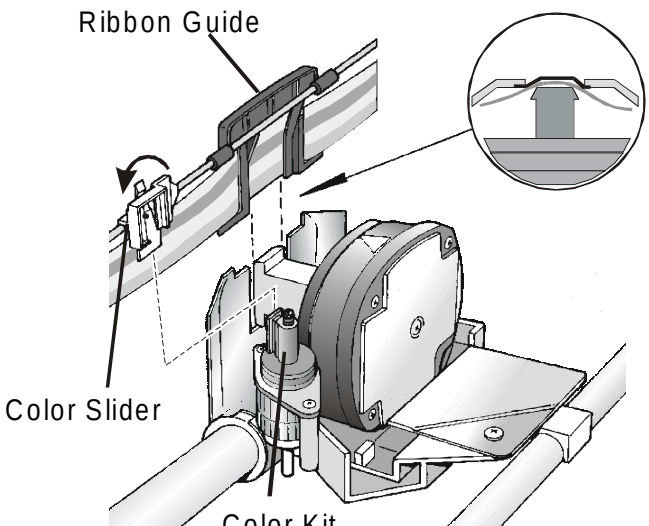

4. Remove the used ribbon cartridge by lifting it up.

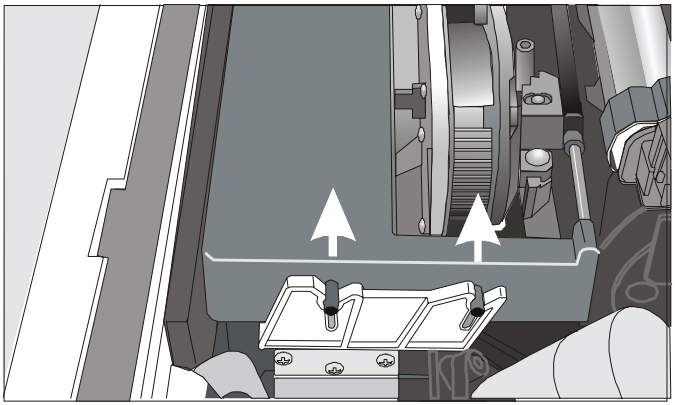

Now, you are ready to insert the new ribbon cartridge. See before "Ribbon Cartridge Installation"

Printing the Self Test

If you need to know any printer setting, and to check if the printer is working well, print the self-test.

Proceed as follows:

1. Keep the ON LINE key pressed while powering on the printer until the display shows `RELEASE KEY`.
2. When you release the key, the printer starts the self-test printout.
3. To stop the self-test printing, press the ON LINE key again. The printer is offline.

Error Handling

When an error condition occurs:

- the printer is disabled;
- the first message on the display indicates the error, while the second message gives more details concerning the error conditions.

Press always the ON LINE key to reset the error condition.

Error Message Description

Messages	Indication	Solution
A.G.A NOT OPER ADJUST THE GAP	The automatic gap adjustment (A.G.A) is not enabled.	Press the ON LINE key to reset the error condition. Adjust the print head gap to a fixed distance. Select the print head fixed gap adjustment function in the *Program Menu*. • Press the PROGRAM key when the printer is disabled (READY indicator unlit) to enter the *Program Setup* • Press the ↓ key until the `USER MACRO` function is displayed. Press the → key until the desired macro is displayed (`MACRO#`*x*). Press the → key to enter the macro parameters. Press the ↓ key until the `FIXED GAP` parameter is displayed. Press the → o ← keys to select the fixed gap adjustment values. From `FIXED GAP 1` (simple fanfold paper) to `FIXED GAP 4` (multipart fanfold paper).
BUFFER OVERFLOW CHARACTER LOST	A buffer overflow condition occurred (for the serial interface).	Turn the printer off and on again, or press the PROGRAM and ON LINE key successively to clear the buffer.
CUT NOT ALLOWED NUM. LINES < 12	An error occurred with the optional cutter.	The paper to be cut is shorter than 12 lines. Turn the printer off and on again. If the error is not solved, call the Customer Support.

Messages	Indication	Solution
DATA SET OFF	The DSR Signal is not connected to the printer and is not ready for data transfer (if the serial interface is selected). This condition may happen in a remote connection (via modem) and the DSR (DATA SET READY) signal is missing.	Press the ON LINE key to reset the error condition.
INTERLOCK ERROR CHECK INSERTION	Neither the rear tractor nor the tractor cover are installed on the printer.	Install the rear tractor or the tractor cover on the printer.
JAM LOWER PATH CHECK PAPER	A paper jam error condition occurred in the paper path	Check the paper path and remove the jammed paper. Press the ON LINE key to reset the error condition.
JAM UPPER PATH CHECK PAPER	A paper jam error condition occurred in the paper path	Check the paper path and remove the jammed paper. Press the ON LINE key to reset the error condition.
NO PATH AVAILABLE PATH CHANGING	An electromechanical failure occurs in the lower tractor paper path. The printer changes automatically to the cut sheet paths (Manual or ASF).	Call Service.

Messages	Indication	Solution
NVM CHANGE REMOVE PAPER	If this error is displayed during the printer power on, an NVM error condition occurred.	Turn the printer off and then on again. If the problem is not solved call Service
PAPER JAM CHECK ALL PATHS	A paper jam error condition occurs in one of the paper paths.	Check all the paper paths and remove the jammed paper. Press the ON LINE key to reset the error condition.
PRINT INTEGRITY	Anomalous print out because of a possible print carriage blocking	¬ Do not move the platen knob. Press the ON LINE key to reset the error condition
RIBBON BLOCKED CHECK RIBBON	The ribbon of the cartridge is blocked	Check that the ribbon is correctly inserted. Turn the tension knob to make sure that the ribbon is not jammed. Press the ON LINE key to reset the error condition.
UNKNOWN TRACTOR	A tractor type that is not recognized has been mounted on the printer.	Check that the installed tractor is compatible with the printer.

The Rear Pull Tractor

The rear pull tractor is useful to handle particularly heavy paper.

Installing the Rear Pull Tractor

1. Turn the printer off.
2. Remove the ASF cover, the rear tractor area cover and the two small tractor fixing area covers.

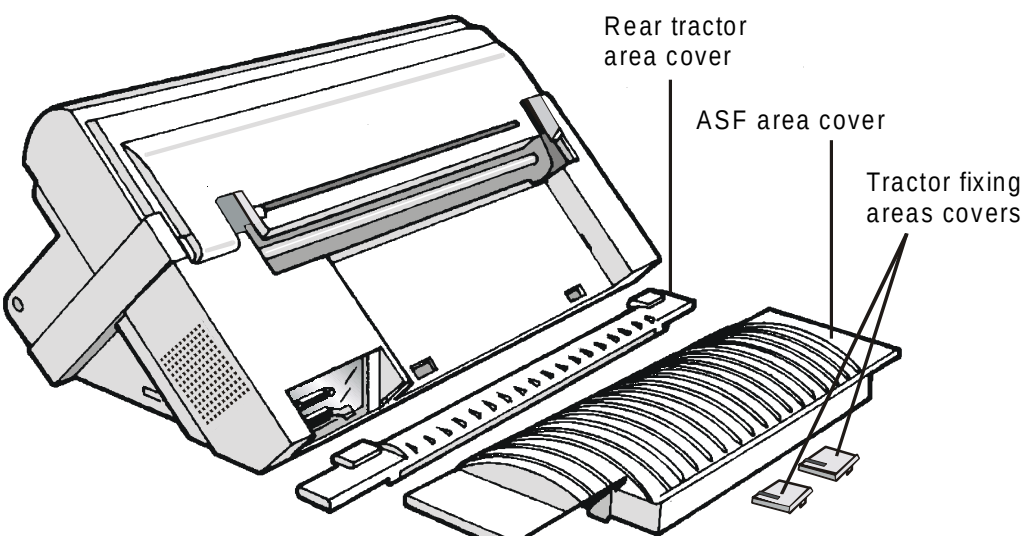

Keep the covers in a safe place, as they must be reinstalled if the rear tractor is removed.

3. Replace the ASF cover.

4. Open the top cover, free (1) the paper bail and remove (2) it from the hooks on both sides of the printer. Then install the rear pull tractor. Close the top cover

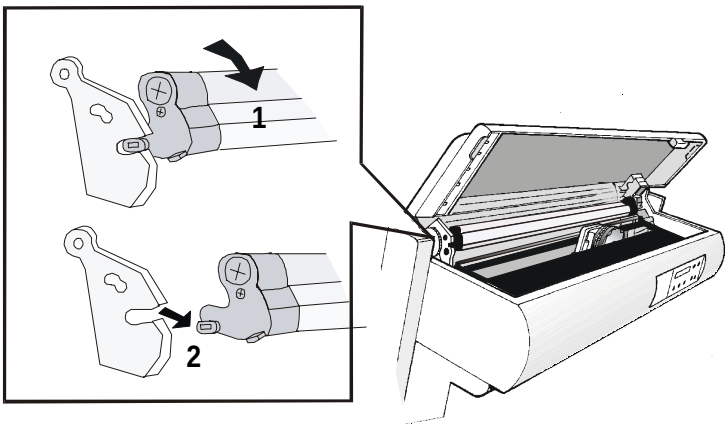

5. Insert the rear pull tractor and the corresponding fixing area covers (with the slot) as shown in figure.

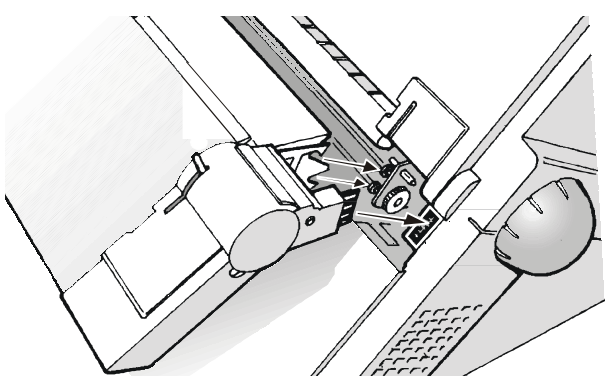

6. Turn the printer on.

The paper can be loaded in push-pull mode. See before "Loading Paper Using the Lower Push Tractor and the Rear Pull Tractor".

Removing the Rear Pull Tractor

1. Push the lever on the rear pull tractor down and lift the tractor out of the printer.

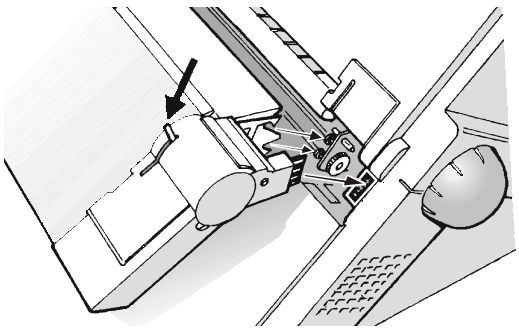

2. Insert the rear tractor cover and make sure that the interlock connector is correctly inserted.

If the cover is not inserted, the printer is blocked.

3. Open the top cover. Move the print carriage to the right most position, then insert (1) the paper bail pins into the hooks on both sides of the printer. Rotate (2) the paper bail upwards and gently push it on both sides towards the back of the printer until it clicks into place.

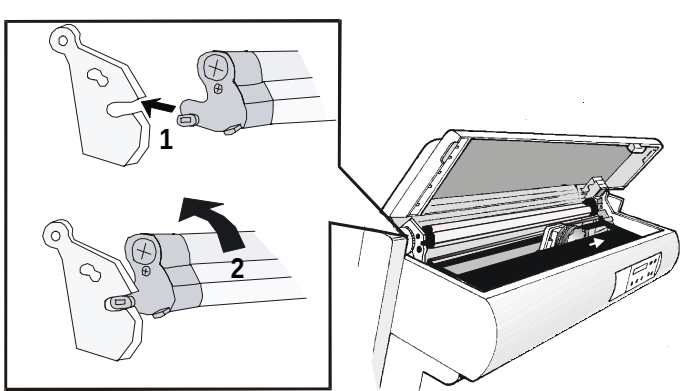

Printer Specifications

Printing Characteristics

Print Head	
Matrix	24 pins - 0.25 mm
Print Head Life	700 mil characters (draft)

Print Speed (cps)					
	Draft		Quality		
10 cpi	Normal	700	LQ		133
	Best	400	NLQ		266
			Best	LQ	200
			Best	NLQ	400

Throughput (pages/hour)					
ECMA 132	Draft		Quality		
10 cpi	Normal	540	LQ		220
	Best	470	NLQ		310
			Best	LQ	290
			Best	NLQ	430

Print Matrix (horizontal x vertical)		
	Draft	Quality
10 cpi	12 x 12	36 x 24
12 cpi	10 x 12	30 x 24
15 cpi	12 x 12	24 x 16
17.1 cpi	12 x 12	36 x 24
20 cpi	12 x 12	30 x 24
24 cpi	12 x 12	24 x 16

Print Density (characters per inch)	
Normal	10 - 12 - 15 - 17.1 - 20 - 24
Enlarged	5 - 6 - 7.5 - 8.55
Proportional	

Line Length (number of characters)			
10 cpi	136	17.1 cpi	233
12 cpi	163	20 cpi	272
15 cpi	204	24 cpi	326

Vertical Spacing
6, 8, 12 lpi
3, 4, 6, 8, 12 lines/30 mm N/72, n/144, n/216, n/360

Print Styles
Draft, Courier, OCR-B, Gothic, OCR-A, Script

Print Attributes
Sub-Superscript, Underline, Overscore, Italics, Emphasized

Graphic Resolution (dots per inch)	
horizontal	60, 80, 90, 120, 180, 240, 360
vertical	60, 72, 180

Characters Sets	
International character sets ASCII	Normal and Slanted
Standard PC IBM Character Sets	CS1 and CS2
EPSON National Variations	USA, France, Germany, United Kingdom, Denmark-1, Sweden, Italy, Spain-1, Japan, Norway, Denmark-2, Spain-2, Latin America
IBM and EPSON Character Sets	USA (CP437), Greek (CP437-G), Multilingual (CP850), Greek (CP851), Eastern Europe (CP852), Turkish (CP 853), Cyrillic (CP855), Turkish (CP857), Euro PC Multilingual (CP858), Portugal (CP860), Hebrew (CP862), Canada/France (CP863), Arabic (CP864), Denmark/Norway (CP865), Russian (CP866), Turkish2 (CP867), OCR-A (CP876), OCRB (CP877), Central Europe (CP1250), Cyrillic (CP 1251), Windows Latin 1 Ansi (CP 1252) 96 GREEK, GOST, TASS, MAZOWIA
ISO Character Sets	8859/1 (Latin1), 8859/2 (Latin2), 8859/3 (Latin3), 8859/4 (Latin4), 8859/5 (Latin/Cyrillic), 8859/6 (Latin/Arabic), 8859/7 (Latin/Greek), 8859/8 (Latin/Hebrew), 8859/9 (Latin5). 8859/15 (Latin9)

Bar Codes
EAN-8, EAN-13, UPC-A, UPC-E, UPC/EAN 2, UPC/EAN 5, Code GP, C25-3BAR, Code BCD, MSI Plessey, Code 11, Code 93, 2/5 Bidirectional, 2/5 Interleaved, 2/5 Industrial, 2/5 Matrix, Code 39, Codabar, Code 128, Postnet

Emulations	
- EPSON LQ 1050-2550 (ESC/P)	- IBM Proprinter XL24E/XL24 AGM
	- IBM Personal Printer 2391+

Paper Handling

9078 plus model Base Configuration			
Fanfold Paper			
1	LOWER PUSH TRACTOR		
	Fanfold width:	76 to 432 mm	(3 to 17 inches)
	Copies:	1 original + 7 copies	Max. thickness 0,635 mm
Cut Sheets (loaded through the manual slot)			
	Sheet width:	114 to 432 mm	(4,5 to 17 inches)
	Standard formats:	A5 - A4 - A3 - A2 in portrait Letter - Legal - Executive	
	Copies:	1 original + 7 copies	Max. thickness 0,635 mm

9078D plus model Base Configuration			
Fanfold Paper			
1	LOWER PUSH TRACTOR		
	Fanfold width:	76 to 432 mm	(3 to 17 inches)
	Copies:	1 original + 7 copies	Max. thickness 0,635 mm
1	UPPER PUSH TRACTOR		
	Fanfold width:	76 to 432 mm	(3 to 17 inches)
	Copies:	1 original + 7 copies	Max. thickness 0,635 mm

With the pull tractor option
Push-Pull Feeding
Front fanfold insertion with lower tractor in front push mode and rear tractor in pull mode.

Automatic Sheet Feeder Option	
First tray	Single sheets, envelopes and postcards
Second and third tray	Single Sheets
Paper stacker	
- Tray capacity	120 sheets (80 g/m^2)
- Sheet width	88,9 to 304,8 mm (3,5 to 12 inches)
Copies	1 original + 2 copies
Coexisting with manual sheet (9078 plus model only) Coexisting with fanfold in push mode	

Standard Functions
• Automatic print head gap adjustment (AGA)
• Automatic paper path switching via operator panel or S/W commands
• Paper parking
• Plug & Play capability
• Bar Code printing
• Automatic fanfold positioning for tear-off
• Setting and storage of paper format and print conditions for each paper path in the non volatile memory

Physical and Electrical Characteristics

Interfaces	
Parallel	Centronics Compatible Bi-directional (IEEE-1284) nibble and byte modes - 36 pin Amphenol connector
	Receive Buffer: max. 64 Kbytes
Serial	RS-232/C and RS-422/A - dB 25 connector
	Baud Rate: 300 to 38400 bps
Automatic interface switching	

Reliability	
MTBF	Mean Time between failure: 10000 hours at 25% DC
MTTR	Mean Time To Repair: 30 minutes
Workload	43000 pages/month (ECMA 132 - 4 hours for 20 days)

Power Supply	
120 V/ 60 Hz	USA power cable
220 - 240 V / 50 Hz	European power cable
	UK power cable
Power Consumption	Standby: 28W ---- Average Printing: 90 W

Noise Level
54 dBA

Environment Conditions		
Storage Conditions		
	Temperature	-40° to 50° C
	Relative Humidity	10%t o 90% RH (non condensing)
Operating Conditions		
	Temperature	10° to 38° C
	Relative Humidity	10 % to 90 % RH (non condensing)
Paper Conditions		
	Temperature	16° to 24° C
	Relative Humidity	40% to 60% RH (non condensing)

Physical dimensions	
Height	315 mm (12,21 inches)
Width	670 mm (26,18 inches)
Depth	390 mm (15,35 inches)
Weight	18 kg (44,15 lbs)