REV	DESCRIPTION	RELEASE NUMBER
A	PRODUCTION UNIT RELEASE	TCP-20-018

GENERAL NOTES:

1. GENERAL REQUIREMENTS:

   A. APPLY GENERAL REQUIREMENTS AS PER ZIMMER CAS STD-GEN- 01, UNLESS OTHERWISE SPECIFIED ON THIS DRAWING

   B. INSPECTION AS PER ZIMMER CAS STD-INS-01,UNLESS OTHERWISE SPECIFIED ON THIS DRAWING

2. TOTAL THICKNESS, EXCLUDING LINER AND DIMPLES MUST BE 0.74mm +/- 0.1mm

3. MOUNTING PART MUST HAVE HOLES MATCHING GRAPHIC MATERIAL

4. UNSPECIFIED DIMENSIONS:

   A. THIS IS A LIMITED CONTENT DRAWING. REFER TO 3D PART: 20-8011-500-14 REV A.X_T

   B. GENERAL FORM TOLERANCE : ⌓ 0.254

5. PACKAGING/LABELING:

   A. BULK, DOUBLE POLY-BAG, WITH TIE OR HEAT SEAL.

   B. PART MUST PACKAGE AS PER STD-PAC-01. AFFIX BAG LABELS TO INNER BAG (TO INCLUDE: P.O. NUMBER, PART DESCRIPTION, PART NUMBER, PART REVISION, QTY PER BAG, & LOT NUMBER)

   C. ALL PARTS MUST BE CLEAN, FREE OF DUST, GREASE AND OTHER FLUIDS

6. CERTIFICATIONS REQUIRED:

   A. MATERIAL CERTIFICATION.

   B. CERTIFICATION OF CONFORMANCE (TO INCLUDE: P.O. NUMBER, PART DESCRIPTION, PART NUMBER, PART REVISION, QTY PER BAG, & LOT NUMBER)

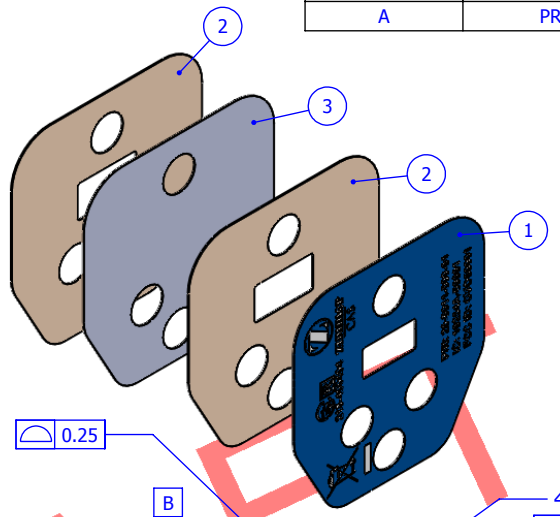

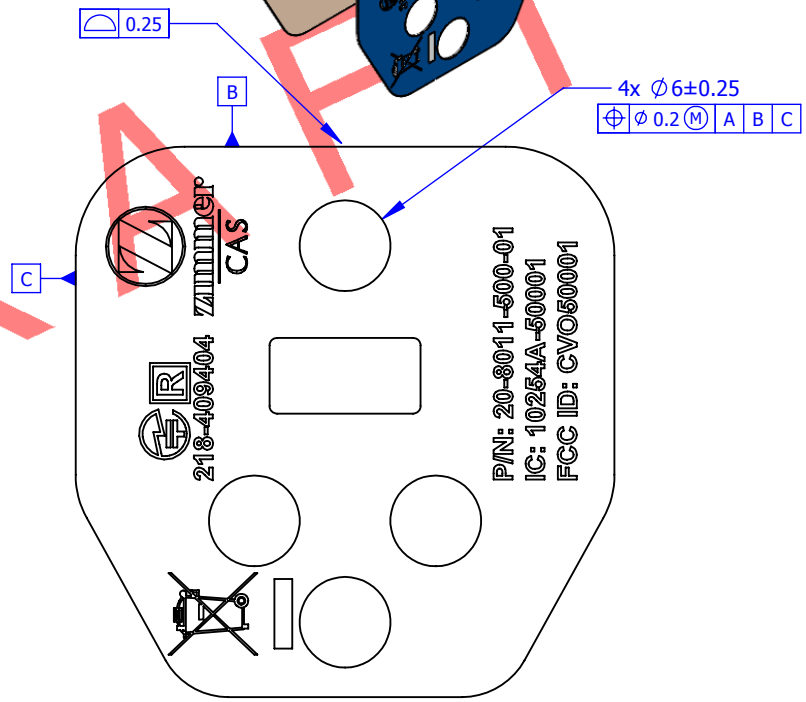

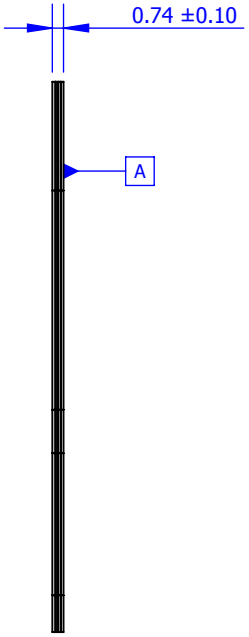

DRAFT

ITEM	QTY	DRAWING NUMBER	REVISION	DESCRIPTION	MATERIAL
1	1	20-8011-500-14.01	A	POD V2 GRAPHIC OVERLAY BACK STICKER REFERENCE	Refer to drawing
2	2	20-8011-500-12.02	A	POD V2 BOTTOM LABEL ADHESIVE	Refer to drawing
3	1	20-8011-500-12.03	A	TYVEK POD V2 BACK STICKER	Refer to drawing

zimmer | CAS
75 Queen, Suite 3300, Montréal, QC, Canada, H3C 2N6

UNLESS OTHERWISE SPECIFIED
TOLERANCES
METRIC
> 0 ... 150 ± 0.5
> 150... 600 ± 0.8
> above 600 ± 1.5
ANGLE: ± 2°
UNLESS OTHERWISE SPECIFIED, ALL DIMENSIONS ARE IN MILLIMETERS

REMOVE ALL BURRS AND SHARP EDGES
0.5 MAX

DIMENSIONING AND TOLERANCING PER ASME Y14.5M-2009

MATERIAL: SEE BOM
THIRD ANGLE PROJECTION: 3RD

THE INFORMATION CONTAINED IN THIS DRAWING IS PROPRIETARY TO ZIMMER CAS ANY REPRODUCTION IN PART OR AS A WHOLE WITHOUT THE WRITTEN PERMISSION OF ZIMMER CAS IS PROHIBITED.

MASS (g): 0.75
ENV. (-): -
X -
X -

DESIGNED BY: Ismail Moussaoui
VERIFIED BY:
APPROVED BY:

DATE: 01-DEC-2020
DATE:
DATE:

PART NAME: POD V2 BACK STICKER REFERENCE
PART NUMBER: 20-8011-500-14
SCALE: 2:1
SHEET: 1/1

REV	DESCRIPTION	RELEASE NUMBER
A	PRODUCTION UNIT RELEASE	TCP-20-018

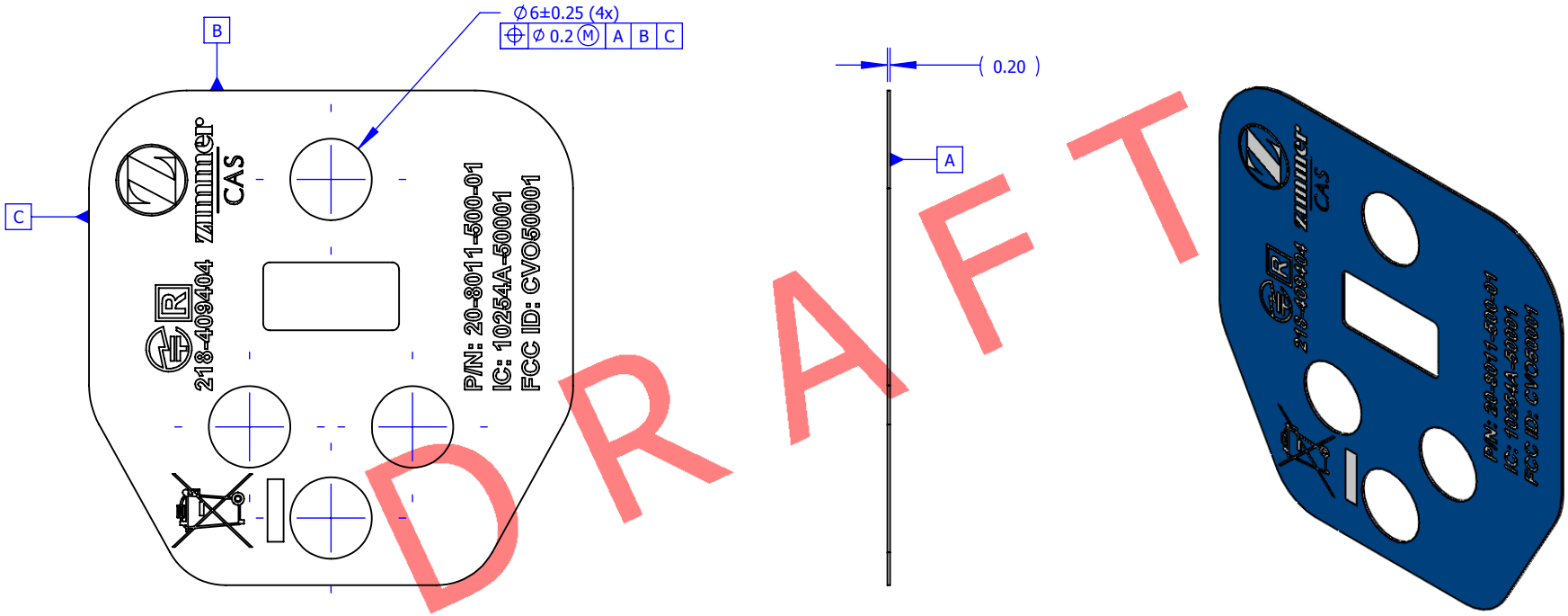

GENERAL NOTES:

1. GENERAL REQUIREMENTS:

   A. APPLY GENERAL REQUIREMENTS AS PER ZIMMER CAS STD-GEN- 01,UNLESS OTHERWISE SPECIFIED ON THIS DRAWING

2. MATERIAL: AUTOTEX V207 , VELVET TEXTURE

3. UNSPECIFIED DIMENSIONS:

   A. THIS IS A LIMITED CONTENT DRAWING. REFER TO 3D PART: 20-8011-500-14.01 REV A.X_T
   B. GENERAL FORM TOLERANCE : 0.254

zimmer | CAS
75 Queen, Suite 3300, Montréal, QC, Canada, H3C 2N6

UNLESS OTHERWISE SPECIFIED		MATERIAL	MASS (g)	DESIGNED BY	DATE	PART NAME
TOLERANCES METRIC > 0 ... 150 ± 0.5; > 150... 600 ± 0.8; > above 600 ± 1.5; ANGLE: ± 2°	REMOVE ALL BURRS AND SHARP EDGES 0.5 MAX	See notes	0.20	Ismail Moussaoui	01-DEC-2020	POD V2 GRAPHIC OVERLAY BACK STICKER REFERENCE
UNLESS OTHERWISE SPECIFIED, ALL DIMENSIONS ARE IN MILLIMETERS	DIMENSIONING AND TOLERANCING PER ASME Y14.5M-2009	THIRD ANGLE PROJECTION 3RD	ENV. (-) -	VERIFIED BY	DATE	PART NUMBER 20-8011-500-14.01
		THE INFORMATION CONTAINED IN THIS DRAWING IS PROPRIETARY TO ZIMMER CAS ANY REPRODUCTION IN PART OR AS A WHOLE WITHOUT THE WRITTEN PERMISSION OF ZIMMER CAS IS PROHIBITED.	X - X -	APPROVED BY	DATE	SCALE 2:1 / SHEET 1/2

Color Notes:

1. Dark BLUE: PANTONE REFLEX BLUE C
2. Light Blue: PANTONE 270 C

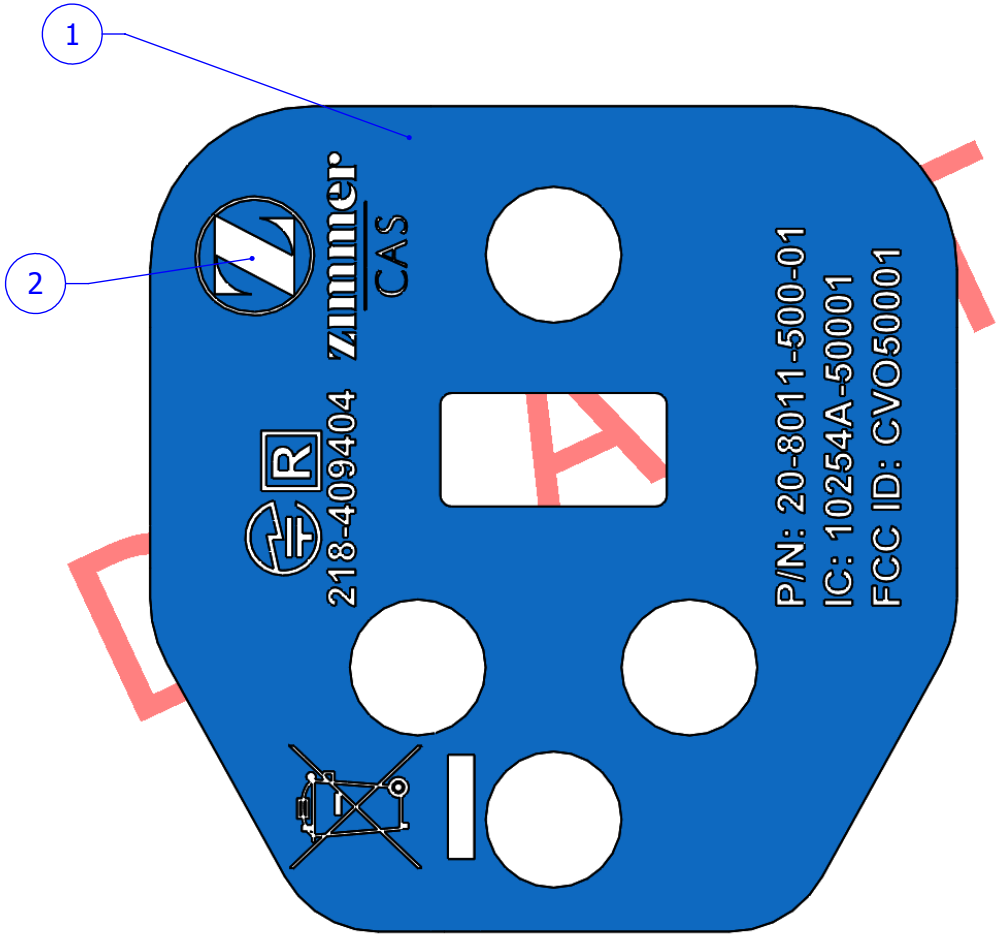

zimmer | CAS 75 Queen, Suite 3300, Montréal, QC, Canada, H3C 2N6	UNLESS OTHERWISE SPECIFIED TOLERANCES **METRIC** **> 0 ... 150 ± 0.5** **> 150... 600 ± 0.8** **> above 600 ± 1.5** **ANGLE: ± 2°** UNLESS OTHERWISE SPECIFIED, ALL DIMENSIONS ARE IN MILLIMETERS	REMOVE ALL BURRS AND SHARP EDGES **0.5 MAX** DIMENSIONING AND TOLERANCING PER ASME Y14.5M-2009	MATERIAL See notes THIRD ANGLE PROJECTION 3RD THE INFORMATION CONTAINED IN THIS DRAWING IS PROPRIETARY TO ZIMMER CAS ANY REPRODUCTION IN PART OR AS A WHOLE WITHOUT THE WRITTEN PERMISSION OF ZIMMER CAS IS PROHIBITED.	MASS (g) 0.20 ENV. (-) - X - X -	DESIGNED BY Ismail Moussaoui VERIFIED BY APPROVED BY	DATE 20-APR-2020 DATE DATE	PART NAME POD V2 GRAPHIC OVERLAY BACK STICKER REFERENCE PART NUMBER 20-8011-500-14.01	SCALE 2:1	SHEET 2/2

REV	DESCRIPTION	RELEASE NUMBER
A	PRODUCTION UNIT RELEASE	TCP-20-018

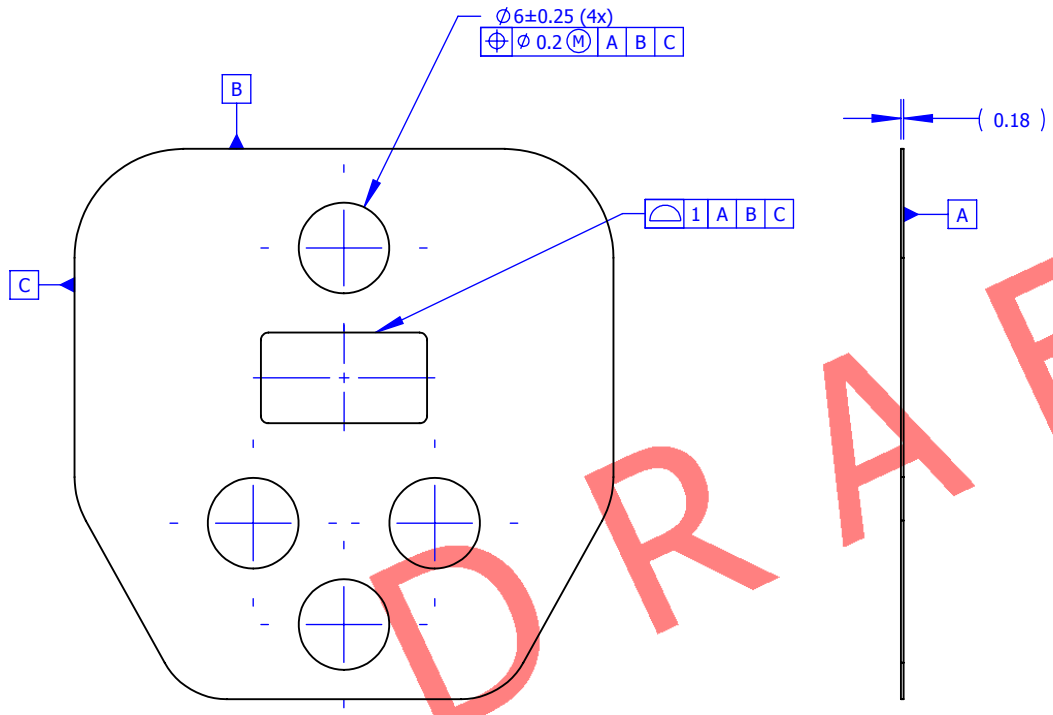

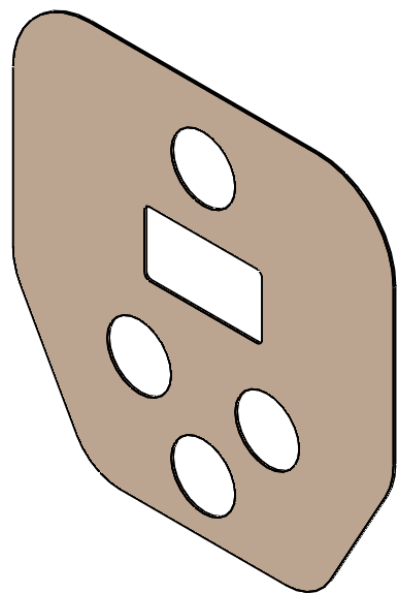

DRAFT

GENERAL NOTES:

1. GENERAL REQUIREMENTS:

   A. APPLY GENERAL REQUIREMENTS AS PER ZIMMER CAS STD-GEN- 01,UNLESS OTHERWISE SPECIFIED ON THIS DRAWING

2. MATERIAL: BLACK 3M 7957M

3. UNSPECIFIED DIMENSIONS:

   A. THIS IS A LIMITED CONTENT DRAWING. REFER TO 3D PART: 20-8011-500-12.02 REV A.X_T
   B. GENERAL FORM TOLERANCE : 0.254

zimmer | CAS
75 Queen, Suite 3300, Montréal, QC, Canada, H3C 2N6

UNLESS OTHERWISE SPECIFIED		MATERIAL	MASS (g)	DESIGNED BY	DATE	PART NAME
TOLERANCES METRIC > 0 ... 150 ± 0.5; > 150... 600 ± 0.8; > above 600 ± 1.5; ANGLE: ± 2°; UNLESS OTHERWISE SPECIFIED, ALL DIMENSIONS ARE IN MILLIMETERS	REMOVE ALL BURRS AND SHARP EDGES 0.5 MAX	See notes	0.18	Ismail Moussaoui	01-DEC-2020	POD V2 BOTTOM LABEL ADHESIVE
		THIRD ANGLE PROJECTION 3RD	ENV. (-) -	VERIFIED BY	DATE	
	DIMENSIONING AND TOLERANCING PER ASME Y14.5M-2009	THE INFORMATION CONTAINED IN THIS DRAWING IS PROPRIETARY TO ZIMMER CAS ANY REPRODUCTION IN PART OR AS A WHOLE WITHOUT THE WRITTEN PERMISSION OF ZIMMER CAS IS PROHIBITED.	X - X -	APPROVED BY	DATE	PART NUMBER 20-8011-500-12.02 / SCALE 2:1 / SHEET 1/1

REV	DESCRIPTION	RELEASE NUMBER
A	PRODUCTION UNIT RELEASE	TCP-20-018

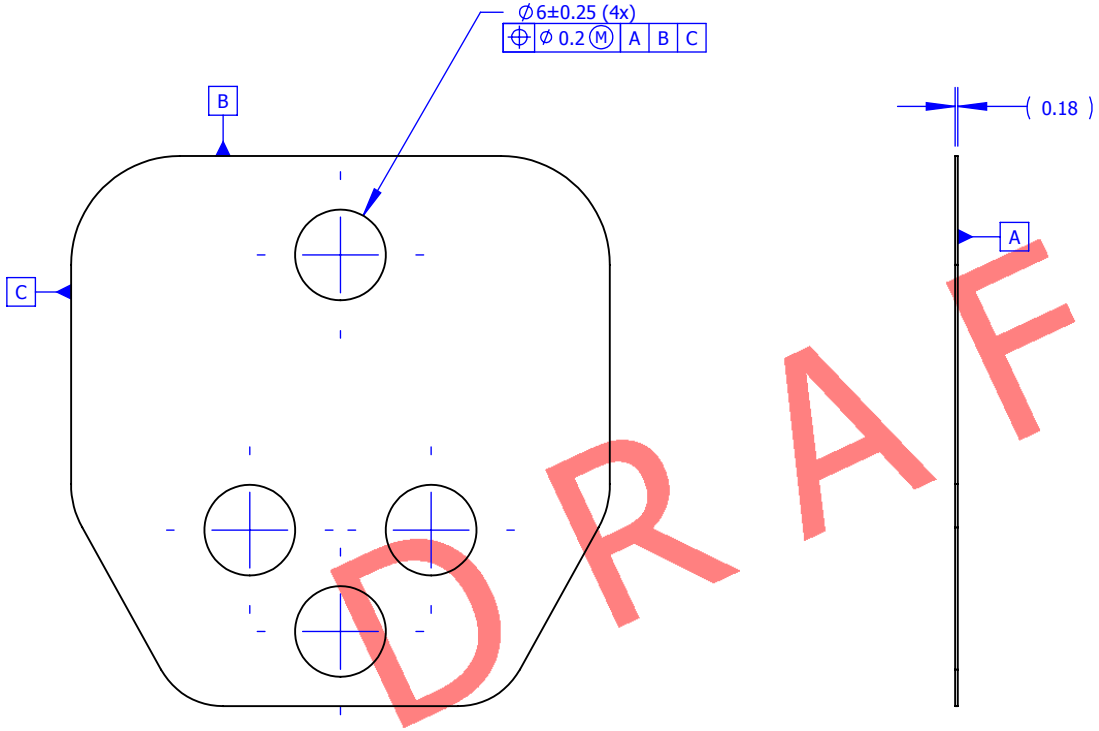

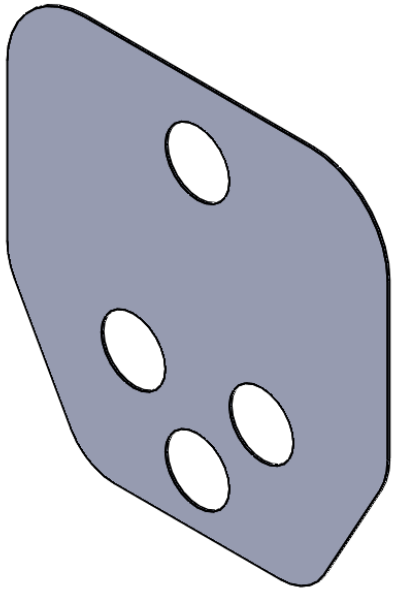

DRAFT

GENERAL NOTES:

1. GENERAL REQUIREMENTS:

   A. APPLY GENERAL REQUIREMENTS AS PER ZIMMER CAS STD-GEN- 01,UNLESS OTHERWISE SPECIFIED ON THIS DRAWING

2. MATERIAL: TYVEK 1073B

3. UNSPECIFIED DIMENSIONS:

   A. THIS IS A LIMITED CONTENT DRAWING. REFER TO 3D PART: 20-8011-500-12.03 REV A.X_T
   B. GENERAL FORM TOLERANCE : ⌓ 0.254

zimmer | CAS
75 Queen, Suite 3300, Montréal, QC, Canada, H3C 2N6

UNLESS OTHERWISE SPECIFIED		MATERIAL	MASS (g)	DESIGNED BY	DATE	PART NAME
TOLERANCES METRIC > 0 ... 150 ± 0.5 > 150... 600 ± 0.8 > above 600 ± 1.5 ANGLE: ± 2° UNLESS OTHERWISE SPECIFIED, ALL DIMENSIONS ARE IN MILLIMETERS	REMOVE ALL BURRS AND SHARP EDGES 0.5 MAX	See notes	0.19	Ismail Moussaoui	01-DEC-2020	TYVEK POD V2 BACK STICKER
		THIRD ANGLE PROJECTION 3RD	ENV. (-) -	VERIFIED BY	DATE	
	DIMENSIONING AND TOLERANCING PER ASME Y14.5M-2009	THE INFORMATION CONTAINED IN THIS DRAWING IS PROPRIETARY TO ZIMMER CAS ANY REPRODUCTION IN PART OR AS A WHOLE WITHOUT THE WRITTEN PERMISSION OF ZIMMER CAS IS PROHIBITED.	X - X -	APPROVED BY	DATE	PART NUMBER 20-8011-500-12.03 / SCALE 2:1 / SHEET 1/1