ZIMMER BIOMET
Your progress. Our promise.®

iASSIST® Knee

2-Pod Version

Surgical Technique

Table of Contents

Overview 2
- Indication for Use 2
- Training 2
- Implant Indications 2
- Contraindications 2
- Complications 2
- Target Population and Clinical Peformance 2
- Reporting Problems 2

Preoperative Guide 3
- iASSIST V2 Tablet Setup 3
- Application Launch and Patient Side Selection 5
- Buttons, Icon and Pod Status Bar 6

Intraoperative Guide 8
- Instrument Assembly 8
- Powering On the Pods and Intraoperative Calibration 10
- Pod Assembly 12
- Femur Procedure 13
- Tibia Procedure 22
- Alternate Techniques to Prepare Tibia Cut 34
- Surgical Technique for Bilateral Procedure 43
- Surgical Transition (Stop Button) 44
- Pod Replacement (Sterility Compromised - Faulty Pod) 44

Postoperative Guide 45
- Connection to the Internet 45
- Case Date Manager 46
- Updating the System 48
- Date, Time and Regulatory Region 50
- Shutdown the iASSIST V2 Tablet 50

Equipment Inventory and Cleaning/Sterilization Methods 51
- Sterilization Parameters 52
- iASSIST Knee Master Instrument Kit 53
- Disposables 59
- iASSIST V2 Tablet Kit 60
- General Equipment Information 60
- Product Specifications and Regulatory Notices 65
- Symbols and Icons 74

For iAssist Knee error information, please reference the iAssist Knee Error Guide.

1.Overview

1.1 Indication for Use

The iASSIST™ Knee System is a computer assisted stereotaxic surgical instrument system to assist the surgeon in preparing the bone surfaces for positioning orthopedic implant system components intra-operatively. It involves surgical instruments and inertial sensors to determine alignment axes in relation to anatomical landmarks and to precisely position alignment instruments and cut guides relative to these axes.

The present iASSIST Knee System is designed for Total Knee Arthroplasty.

1.2 Training

Prior to using the system, surgeons should follow a training given by Zimmer CAS or the distributor for the given applications. Contact your local Zimmer Biomet representative.

Warning: The system should only be used by trained surgeons.

1.3 Implant Indications

The prosthesis implanted with the system must be used in accordance with the appropriate package insert labeling.

The procedure is to be performed in accordance with the corresponding surgical technique published by the manufacturer for the specific implant.

The iASSIST Knee System has only been verified for use with Zimmer Biomet NexGen Knee and Persona Knee implant lines.

Warning: The system should only be used with the instruments provided by Zimmer CAS or by the distributor for the given application.

1.4 Contraindications

1.4.1 Clinical

The system should not be used:

- In cases of hip pathology severely limiting range of motion (e.g. arthrodesis, severe contractures, chronic severe dislocation);
- In cases of hip joint pathology or knee pathology with significant bone loss (e.g. avascular necrosis of the femoral head with collapse, severe dysplasia of the femoral head or the acetabulum, femoral condyle collapse);
- For femoral anterior cut first surgical techniques;
- For total knee arthroplasty using the Quad-Sparing™ technique; or
- For any other contraindicated case, as given by the implant manufacturer.

1.4.2 General

The system should not be used:

- On a moving vehicle, or any mobile platform; or
- To perform surgical procedures other than those specified in the surgical technique defined in this document.

1.5 Complications

Possible complications associated with the use of the system may include but are not limited to the following:

- Infection; and
- Misplacement of the implants potentially leading to dislocation, impingement or leg length discrepancy.

The occurrence of one of these complications may affect the patient's mobility.

1.6 Target Population and Clinical Performance

The iASSIST Knee System is designed for use on a skeletally mature patient population.

The system is designed to provide an HKA (Hip-Knee-Ankle) angle within ±3° of the surgical plan cut decided by the surgeon intra-operatively in 90% of the cases.

1.6 Reporting Problems

The user and/or patient should report any suspected serious incident related to the device by informing the manufacturer and the competent authority of the member state in which the serious incident has occurred.

2.Preoperative Guide

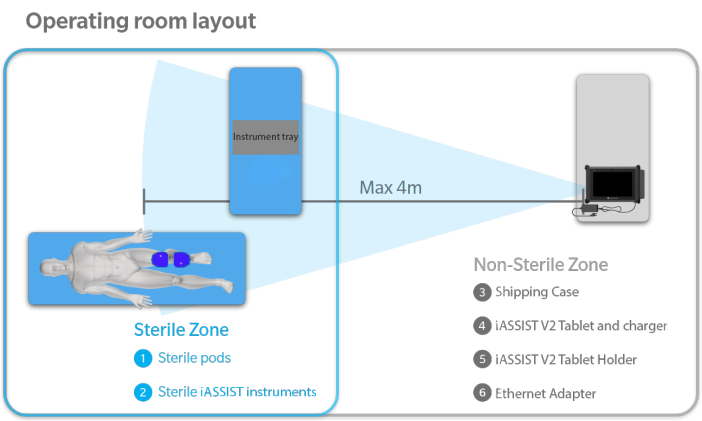

Figure 2.0
Operationg Room Setup

Warning: The surgical procedure must take place in an operating room theater with temperatures ranging from 15°C to 30°C (59°F to 86°F). Ensure that the Pods are maintained in this temperature range before being use in a surgical procedure. Otherwise, the system will indicate that the Pods are outside their operational temperature range and the Pods cannot be used until they reach an adequate temperature.

Ensure that an iASSIST Knee Pod Kit is not used for another surgical procedure. The user must exit and restart the application with a new pod kit to begin another surgical procedure. A bilateral knee procedure is considered as one procedure. As a backup, a second iASSIST Knee Pod Kit should be brought in the operating room theater.

The iASSIST V2 Tablet should remain in the iASSIST V2 Tablet Shipping case during transportation.

Note: A full set of the implant system's standard instrumentation is needed to perform a surgery in conjunction with the iASSIST system and in case the iASSIST components cannot be used. Effects that may prevent use of the iASSIST system include the unlikely possibility of unresolvable interference effects with the wireless communication of the system.

2.1 iASSIST V2 Tablet Setup

1. Open the iASSIST V2 Tablet Shipping Case.
2. Take out the iASSIST V2 Tablet and position it on the Tablet Holder on a stable flat surface outside the sterile zone at a maximum distance of four meters from the instruments and OR tables. Then take out the top level to access the components on the bottom level.

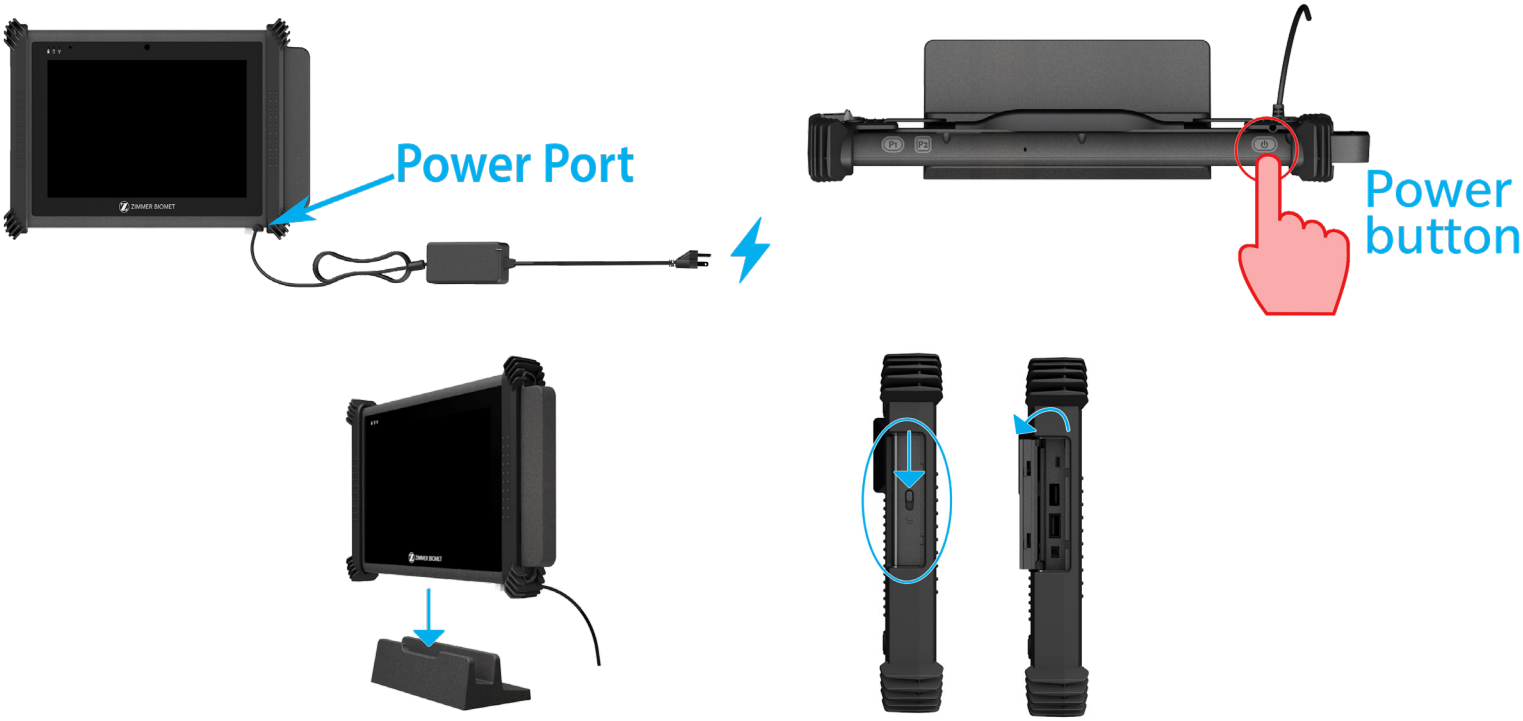

Figure 2.1
iASSIST V2 Tablet Setup

3. Lift the white silicon lid located on the bottom right side of the tablet and connect the power supply to the Tablet port. Then connect the power cord to the power supply and plug it into an AC outlet.

   Warning: The iASSIST V2 Tablet is: a. not intended to be used in the sterile zone; and b. to be connected to an AC outlet during the entire procedure. The Tablet must not be placed in a sterile bag as it might overheat.

4. Press the power button located at the top right hand corner of the iASSIST V2 Tablet to turn on the computer. The home screen will be displayed after boot-up is completed.

   Warning: Do not turn off the iASSIST V2 Tablet without having closed the application. Once the application or the tablet is closed, the Pods will be permanently deactivated. Once deactivated, the Pods cannot be restarted.

5. If necessary, see the "Connection to the Internet" section to know how to connect the Tablet to the Internet. It is not necessary to connect to the Internet to do an iASSIST procedure. This connection can be used, for example, to download system updates.

6. A strap can be installed on the shipping case to facilitate transport.

7. Two other buttons are located at the top left of the iASSIST V2 Tablet. The "P2" button activates and deactivates the Wi-Fi.

   Note: The Internet connection will be deactivated while the iASSIST application is open.

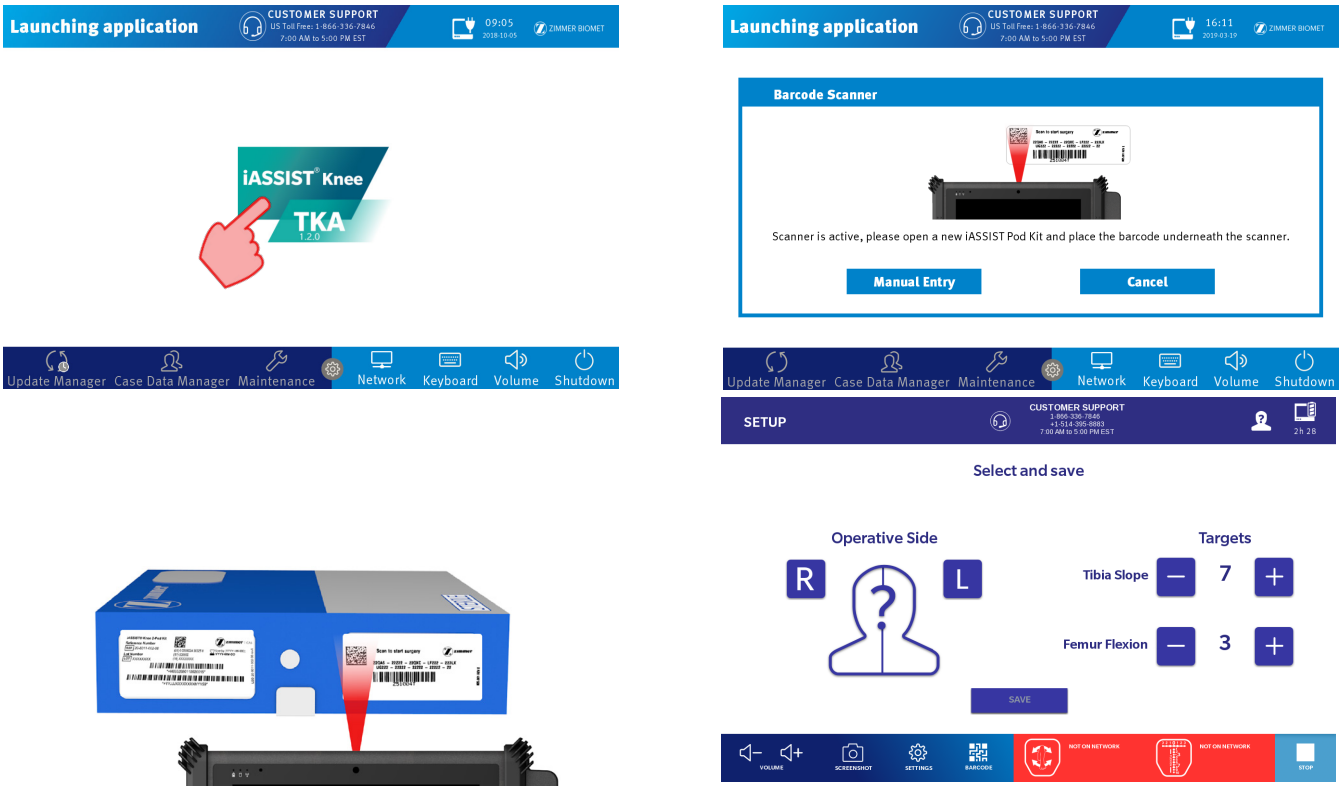

Figure 2.2
Application Launch

2.2 Application Launch and Patient Side Selection

1. Press the green iASSIST icon displayed on the iASSIST V2 Tablet home screen. The barcode scanner window will open and the barcode scanner will start automatically and stay active for 30 seconds.

2. Place the barcode in the barcode scanner field of view. Press on the "Scan" button to restart the scanner if needed.

   Note: If the 2D barcode cannot be read, the barcode can be entered manually by pressing the "Manual Entry" button on the screen.

   Warning: After having scanned the barcode and powered on the Pods, do not exit the application unless the surgical procedure has ended. When exiting the application, the Pods will be permanently deactivated. Once deactivated, the Pods cannot be restarted.

3. If desired, enter a patient ID and press on the continue button. The application will launch and the Tablet will emit a confirmation sound.

4. The Setup window will be displayed. Select the operative side and adjust the target angles for the procedure. Click save to continue.

   Note: If the wrong patient side is selected at the beginning of the surgery, the "Settings" button will be accessible once the Pods have joined the network. It will then be possible to change the patient side.

   Warning: Ensure to enter a de-identified patient ID so that the patient cannot be identified from the data.

Figure 2.3.1
Settings and Screenshot buttons

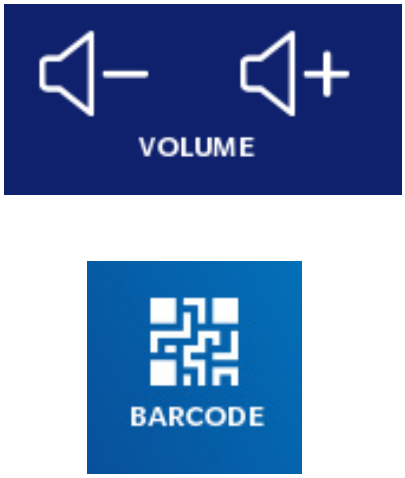

Figure 2.3.3
Audio and Barcode buttons

2.3 Buttons, Icon and Pod Status Bar

2.3.1 Settings Button

Click the "Settings" button located at the bottom of the iASSIST V2 Tablet screen to modify the operative side or enter the desired cut targets for "Tibia Slope Target" and "Femur Flexion Target". These settings can be modified either before or during a surgical procedure. Settings will remain in the system for following surgical procedures.

2.3.2 Screenshot Button

Click the "Screenshot" button located at the bottom of the iASSIST V2 Tablet screen to record a picture of the entire computer screen. This action can be performed at any time during the surgical procedure. All images will be saved in the surgery report found in the "Case Data Manager" (Refer to section 4.2).

Note: If a problem is encountered during the surgery, it is recommended to take a screenshot of the screen. This could be used in the instance when a complaint has to be filed.

2.3.3 Audio Button

Click on the "Volume down" or the "Volume up" buttons to adjust the volume of the Tablet.

2.3.4 Barcode Button

Click the "Barcode" button located at the bottom of the iASSIST V2 Tablet screen if a new set of Pods have to be connected to the Tablet. The user will then be able to scan or manually enter the new barcode.

Figure 2.3.5
Patient Side Icon: Right, Left, Undetermined

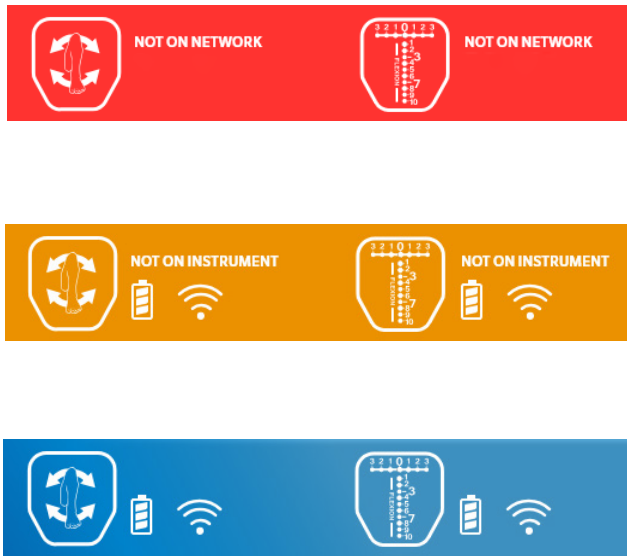

Figure 2.3.6
Pod Status Bar

Buttons, Icon and Pod Status Bar (cont.)

2.3.5 Patient Side Icon

The patient side is indicated at the top of the iASSIST V2 Tablet screen. When the patient side is set, the icon and letter are white on the selected side. If the patient side is not determined the icon is entirely white with a "?" sign. Click on the "Settings" button to change the patient side if necessary (for a bilateral procedure, for example).

2.3.6 Pod Status Bar

The "Pod Status Bar" is displayed at the bottom of the iASSIST V2 Tablet screen. The bar displays the status of each Pod used in the procedure showing its user interface.

A Pod which is not joined to the network is displayed in red.

A Pod which has joined the network but is not connected to an instrument is displayed in orange.

A Pod which has joined the network and is connected to an instrument is displayed in blue.

Status of the Pods battery life or communication is displayed on the Pod Status Bar.

3. Intraoperative Guide

Note: Through this surgical technique, images from a left knee procedure are shown.

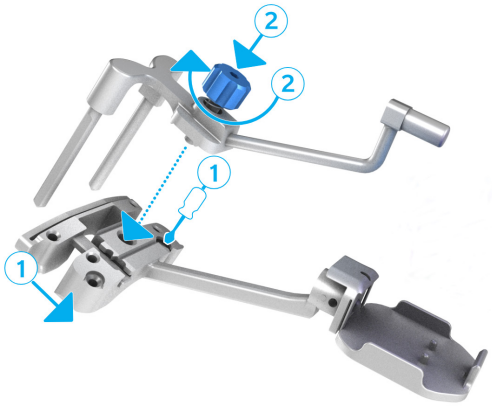

Figure 3.1.1
Femur Instrument Assembly

3.1 Instrument Assembly

3.1.1 Femur Instrument Assembly

1. Insert the Femoral Saw Slot into the Femoral Distal Cut Guide and tighten it at the "0" position with a 3.5 mm hex head screwdriver.

   Note: The Femoral Saw Slot, when secured at the "0" position on the Femoral Distal Cut Guide, resects 10 mm off the most distal condyle.

2. Assemble the Femoral A/P Slider to the Femoral Distal Cut Guide by tightening the blue screw.

   Note: Specific A/P slider and distal femoral Cut Guide are also available to fit high BMI patients. Refer to part numbers:.

   20-8011-027-50 HBMI Distal Femoral Cut Guide
   20-8011-028-50 HBMI Femoral A/P Slider

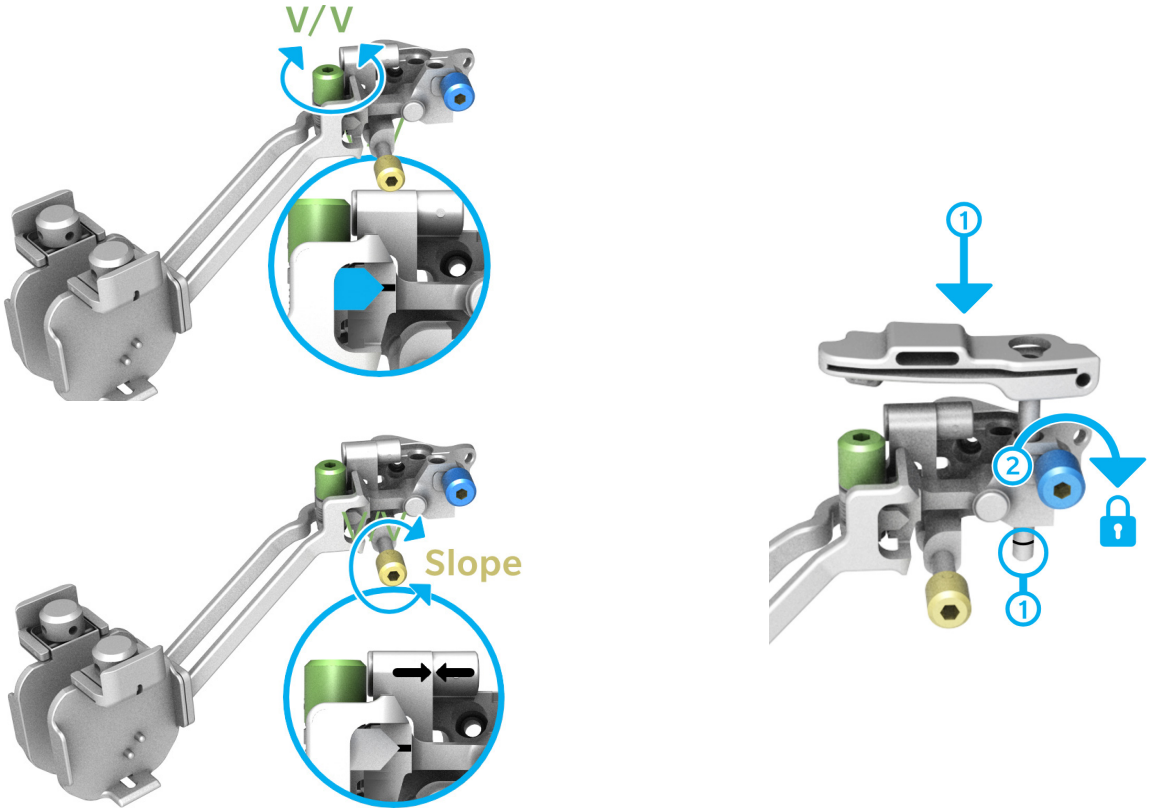

Figure 3.1.2
Tibia Instrument Assembly

3.1 Instrument Assembly (cont)

3.1.2 Tibia Instrument Assembly

Note: There are three different techniques for tibia resection. The first one is the Freehand Positioning of the Tibial Adjustment Mechanism and will be described here. Two more techniques will be described in section "Alternative Techniques to Prepare For Tibia Cut".

The Tibial Right/Left Cut Guides are side specific and must be used per the corresponding Tibial Right/Left Adjustment Mechanism. Depending on the patient side, choose the right or left Cut Guide and Adjustment Mechanism.

1. Using the green screw, set the varus/valgus of the Tibial Adjustment Mechanism to the neutral position by aligning the arrow with the laser marking (v/v). (See figure 3.1.2)
2. Using the gold screw, set the tibia slope of the Tibial Adjustment Mechanism to the neutral position by aligning the laser marked arrows (slope) respectively. (See figure 3.1.2)
3. Insert the Tibial Cut Guide elevator rod into the Tibial Adjustment Mechanism until the lowest line increment is aligned with the bottom edge of the insertion point.
4. Lock the Tibial Cut Guide by hand tightening the blue screw on the Tibial Adjustment Mechanism.

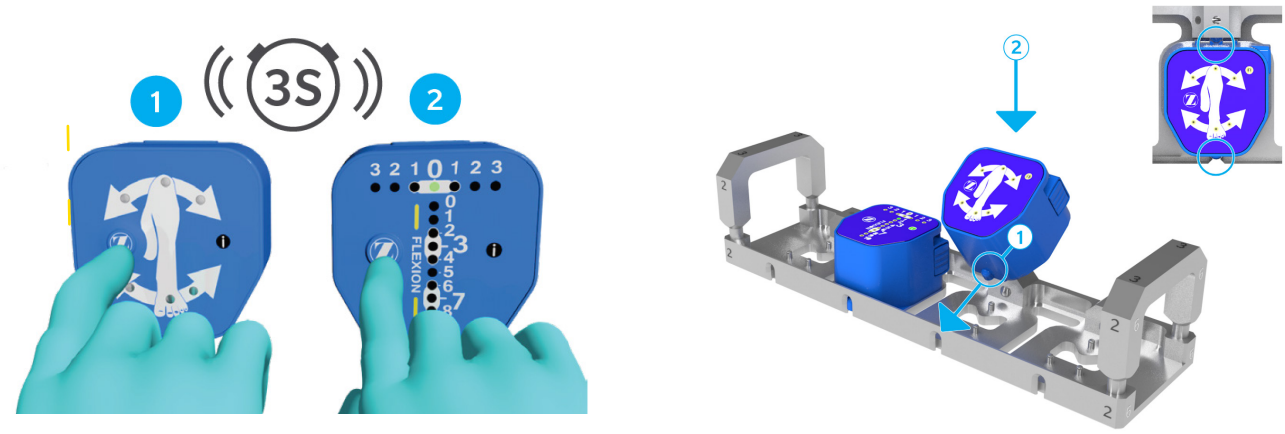

Figure 3.2
Powering-On Pods and intraoperative Calibration

3.2 Powering On the Pods and Intraoperative Calibration

Warning: Verify that the packaging is not damaged. A damaged package may affect the sterility of the Pods. If damage to the sterile packaging is observed, discard the damaged Pod kit and open another iASSIST Knee Pod Kit.

1. Open an iASSIST Knee Pod Kit and remove the Pods from the Pod Tray. Place them on the sterile instrument table.

2. Power-ON each of the Pods by pressing their "Z" button during 3 seconds. The green status LED (Light Emitting Diode) of each Pod will blink quickly.

   Warning: The powering on of the Pods must be performed wearing sterile attire.

   Warning: Make sure to power-on the Pods at the appropriate time i.e. five minutes before the start of the intraoperative calibration. Intraoperative calibration should be performed before incising the patient. After power-on, the Pods will function for approximately two hours. While very unlikely, if a Pod drains its battery before the end of a surgical procedure, the Pod can be replaced by another one following the instructions described in section "iASSIST Knee Pod Kit" without restarting the application.

   As a backup, a second iASSIST Knee Pod Kit should be brought in the operating room theater.

3. Wait for the green status LED of all of the Pods to start blinking slowly before continuing with the intraoperative calibration.

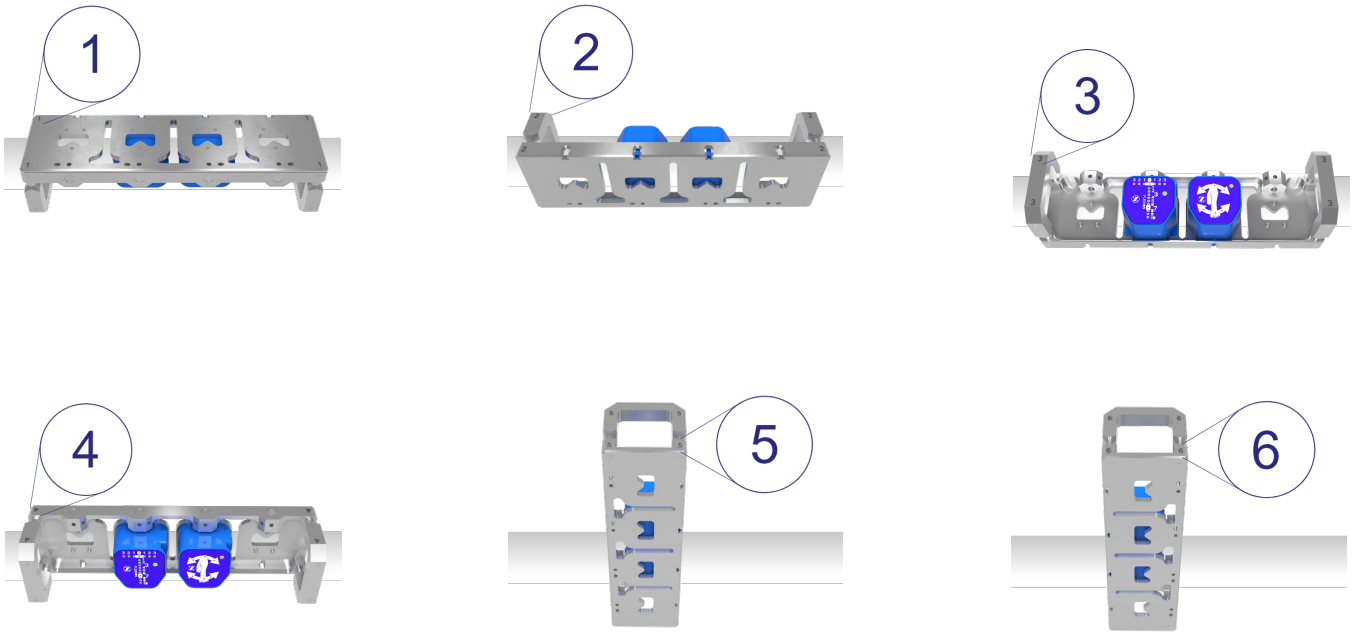

Figure 3.2
Powering-On Pods and intraoperative Calibration (cont)

3.2 Powering-On Pods and Intraoperative Calibration (cont)

Warning: The calibration process including the Pod Calibration Jig handling must be performed wearing sterile attire.

The Pods need to be calibrated on a flat, approximately horizontal surface to ensure optimal performance. This surface must be sterile and free of any movement or vibrations.

4. Clip the Pods to the Pod Calibration Jig by identifying the nose and inserting it in the corresponding recess, then press down on the other side of the Pod. When successfully clipped, the status LED on the Pods will turn solid green.

5. Begin by placing face 1 of the Pod Calibration Jig upwards on a sterile table. The numbers corresponding to each step of the calibration are laser-marked on the jig on the face that should face upwards for this step. Keep the jig steady until a sound is triggered. Continue the sequence by positioning the jig in its remaining five positions (2 through 6). Wait for the confirmation sound to confirm the acquisition between each position. When the calibration is completed, the green status LED of each Pod will blink.

   Note: The green LEDs on the flexion/extension axis of the "Cut Guide" Pod indicate the expected position (1 through 6) of the Pod Calibration Jig during calibration.

6. Unclip all Pods from the Pod Calibration Jig.

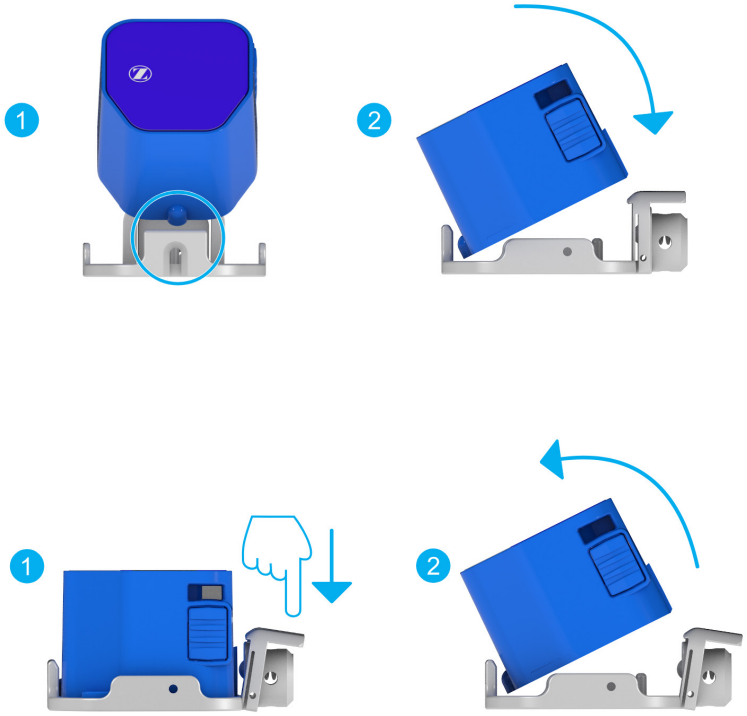

Figure 3.3
Assembling a Pod to an Instrument

3.3 Pod Assembly

To clip and unclip a Pod on any of the iASSIST Knee instruments (except the calibration jig) with the user interface of the Pod facing upwards;

1. Identify the nose on the narrow side of the Pod and insert it in the corresponding recess.
2. Clip the other side of the Pod on the instrument until the spring holder engages. The system will automatically monitor any improper physical connections between the Pods and the instruments.
3. To unclip the Pod, press on the locking lever and pull on the Pod to disengage the spring holder.

Warning: Throughout the surgery, always ensure that the Pods are properly assembled to their corresponding instruments before use.

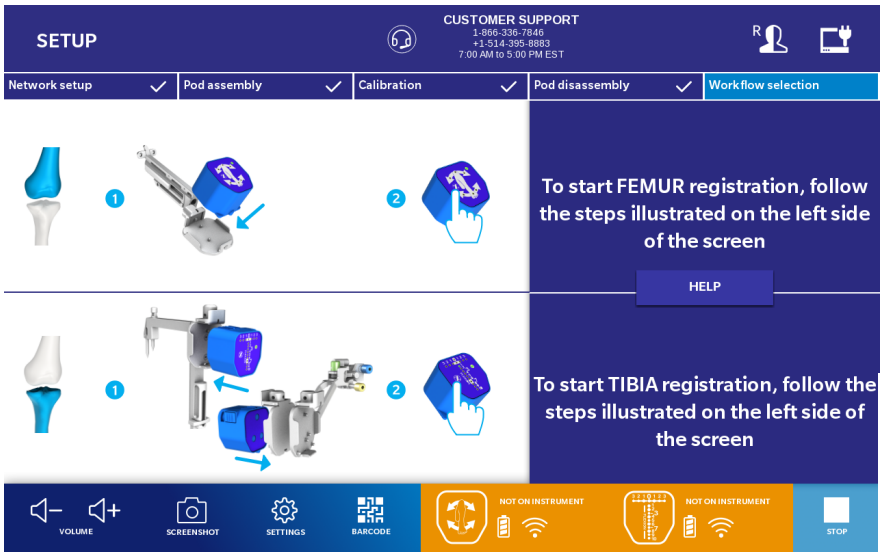

Figure 3.4.1
Workflow Selection

3.4 Femur Procedure

The iASSIST Knee system is compatible with Femur first and Tibia first procedure. See the "Tibia Procedure" section to start with the tibia.

3.4.1 Workflow Selection for Femur

To Start a femur first procedure:

1. Clip the "Reference" Pod to the Femoral Reference.
2. Identify the femur mechanical axis entry point.
3. Impact the Femoral Spike into the distal femur mechanical axis entry point, aiming at the femoral head. Ensure that the star-shaped end is well inserted and stable into the bone.

   Warning: The spike should be aligned within 15° of the mechanical axis of the femur. This alignment is required because of the mechanical adjustment limit of the Femoral Adjustment Mechanism.

Figure 3.4.1
Workflow Selection (cont)

3.4 Femur Procedure (cont)

4. Slide the Femoral Reference onto the spike.
5. Align the Femoral Reference in a neutral rotation position.

   Note: The femoral rotation may be set by: a. Aligning the indicator arrow at the end of the Femoral Reference to Whiteside's line; b. Aligning a pin inserted in the dedicated medial-lateral hole on the body of the Femoral Reference to the epicondyles.

6. Affix the Femoral Reference on the bone with one 3.5 x 38 mm Hex Head Screw in one of the anterior fixation holes.
7. Clip the reference pod to the femoral reference.

   Note: As provided by Zimmer Biomet, the 500 RPM adaptor of the Zimmer Biomet® Universal Power System Surgical Instruments can be used to secure the screw.

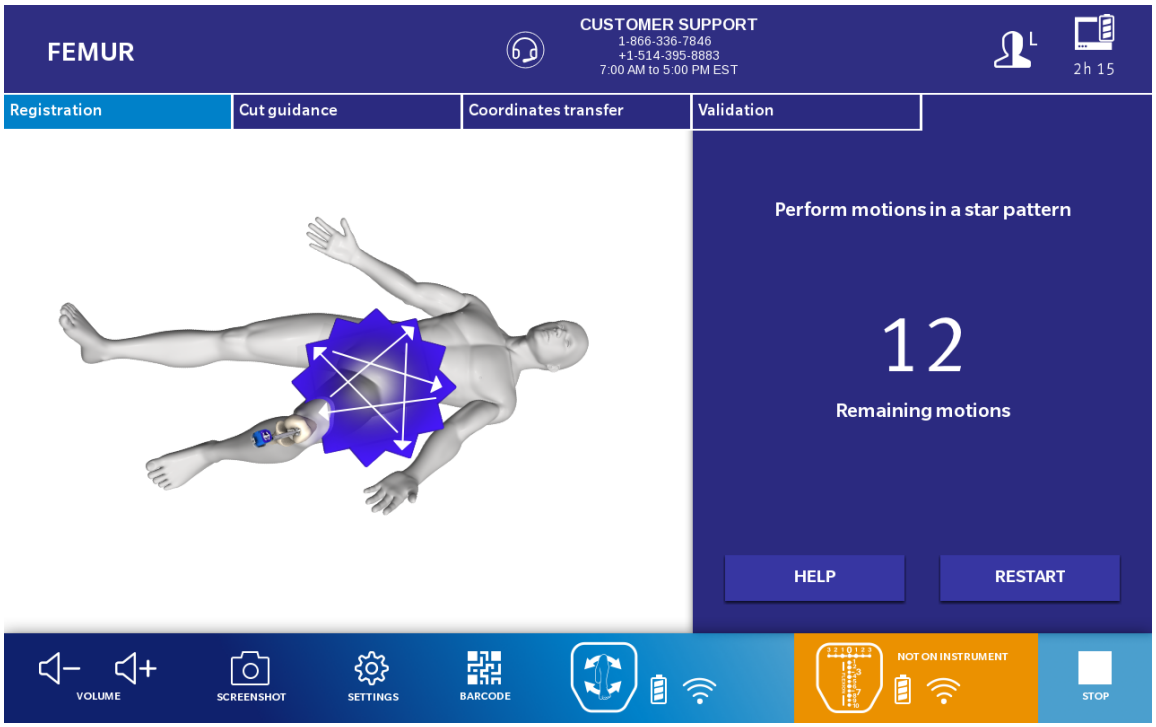

Figure 3.4.2
Femoral Registration

3.4.2 Femoral Registration

Warning: From registration to validation, the instruments must remain stable and properly fixated to the bone to ensure accuracy of the system.

1. Press the "Z" button on the Pod attached to the Femoral Reference to initiate the registration procedure.

2. Acquire 13 stable positions by accelerating and stopping the leg to create a star-shaped pattern. An audio feedback will be generated from the iASSIST V2 Tablet after each acquisition until completion. The LEDs on the Pod will blink sequentially until completion of the acquisition.

   Note: To restart the femoral registration, press the "Z" button on the Pod attached to the Femoral Reference or on the "Restart" button on the tablet screen.

   If needed, click on the "Help" button to watch a video that explains the recommended pattern for the femoral registration movements.

Warning: The pelvis must remain immobile during the femoral registration.

Do not perform the femoral registration by moving the leg in a uniaxial direction, i.e. only in a flexion/extension, abduction/adduction and/or combination of both motions (e.g. T-shape).

Do not perform the registration by making circles with the leg.

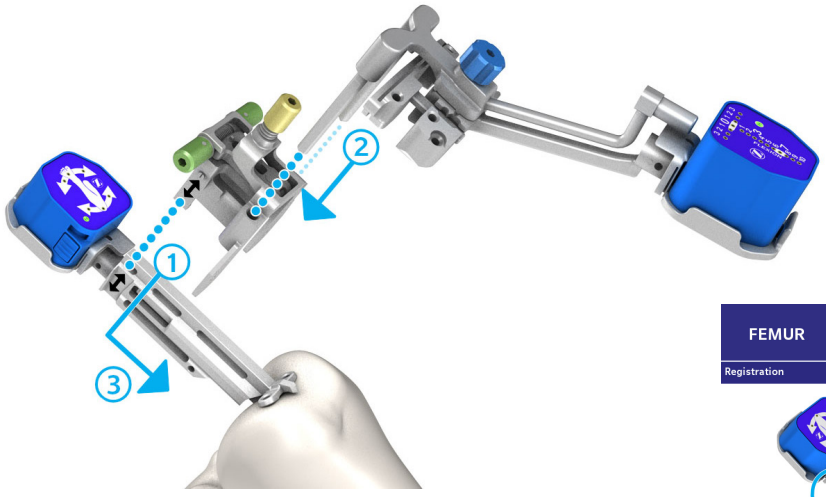

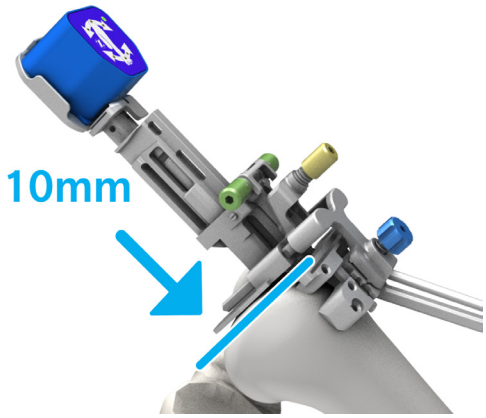

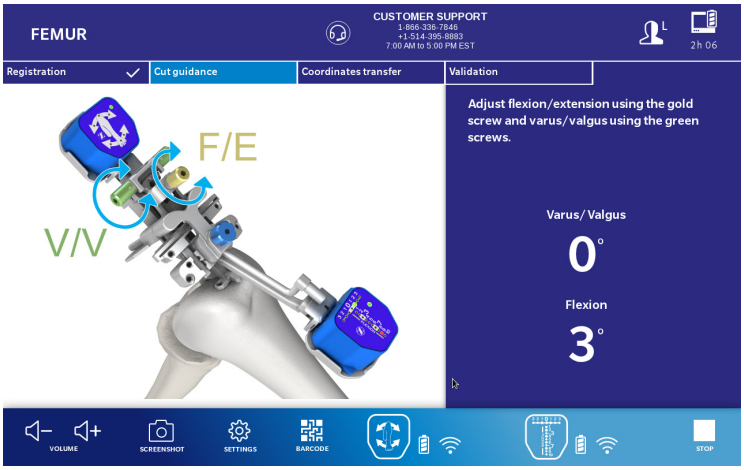

Figure 3.4.3
Distal Femur Cut

3.4.3 Distal Femoral Cut Guidance

1. Install the Femoral Adjustment Mechanism on the anterior side of the Femoral Reference by aligning the arrows laser-marked on the instruments.

2. Clip the Cut Guide Pod on the Cut Guide and insert the two long pegs of the Femoral A/P Slider into the Femoral Adjustment Mechanism.

3. Slide the Femoral Adjustment Mechanism down towards the distal condyles to the half way mark.

4. Adjust flexion/extension and varus/valgus angles using the gold screw for flexion/extension and green screw for varus/valgus.

   Note: The navigated values will be displayed on the Cut Guide Pod: the LEDs will be green when the angle is less than two degrees off from the target angle, and red when the angle is two degrees off or more from the target angle. The navigated values will also be displayed on the iASSIST V2 Tablet: the numbers will be white when the angle is one degree in range of the target, and red when the angle is out of this range.

   Warning: It is suggested to colorblind users to rely on the numbers on the Pod and Tablet displays.

   Warning: The leg should be elevated to obtain more than 45° flexion (in relation to the operating table plane) in order for the system to be able to compute angle values.

5. Once the adjustment is completed, slide the Femoral Adjustment Mechanism towards the femur until it is fully seated on the most distal condyle.

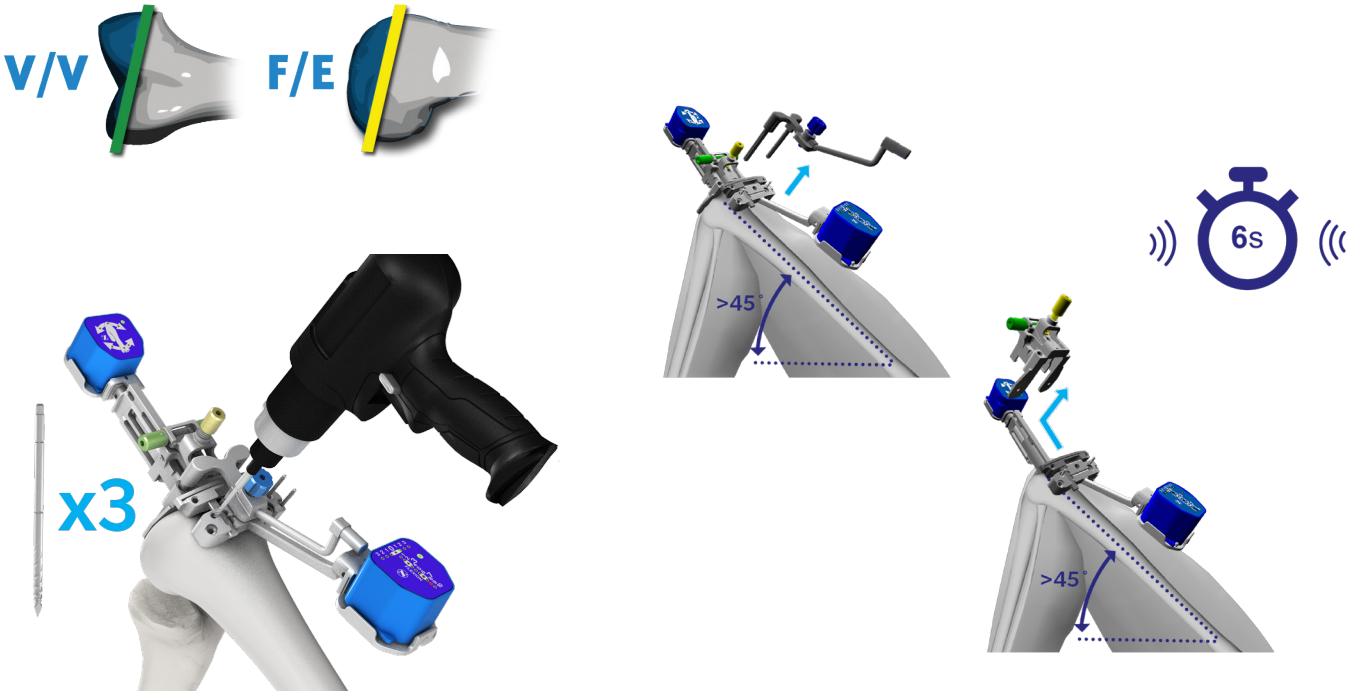

Figure 3.4.3
Distal Femur Cut

3.4.3 Distal Femoral Cut Guidance (cont)

6. Insert three 3.2 mm Headless Trocar Drill Pins in the base of the Femoral Distal Cut Guide using both parallel holes and one diagonal hole in the body of the guide.

7. With the knee stable and flexed more than 45°, unlock the Femoral A/P Slider using the blue screw and remove it from the assembly. Hold the knee steady until the coordinate transfer confirmation sound is heard.

   Warning: When the A/P slider is removed, it indicates to the system that there's a commitment to a cut and prepares for the removal of the distal reference to enable the cut. It is therefore important to remain stable, hold the knee steady, in neutral rotation and flexed 45 degrees (in relation to the surgical table plane) when disconnecting the assembly. This allows for the information of the "Reference" Pod (being removed) to transfer to the "Cut Guide" Pod (staying on the bone). A confirmation sound is heard when the disconnection and the information transfer has been completed between the two Pods. This operation could take up to 6 seconds. If this step is not performed properly, the distal cut can be performed, though the cut validation won't be possible.

8. Once the coordinates transfer is completed, slide the Femoral Adjustment Mechanism away from the distal femur so both arrows are aligned and pull it off the assembly.

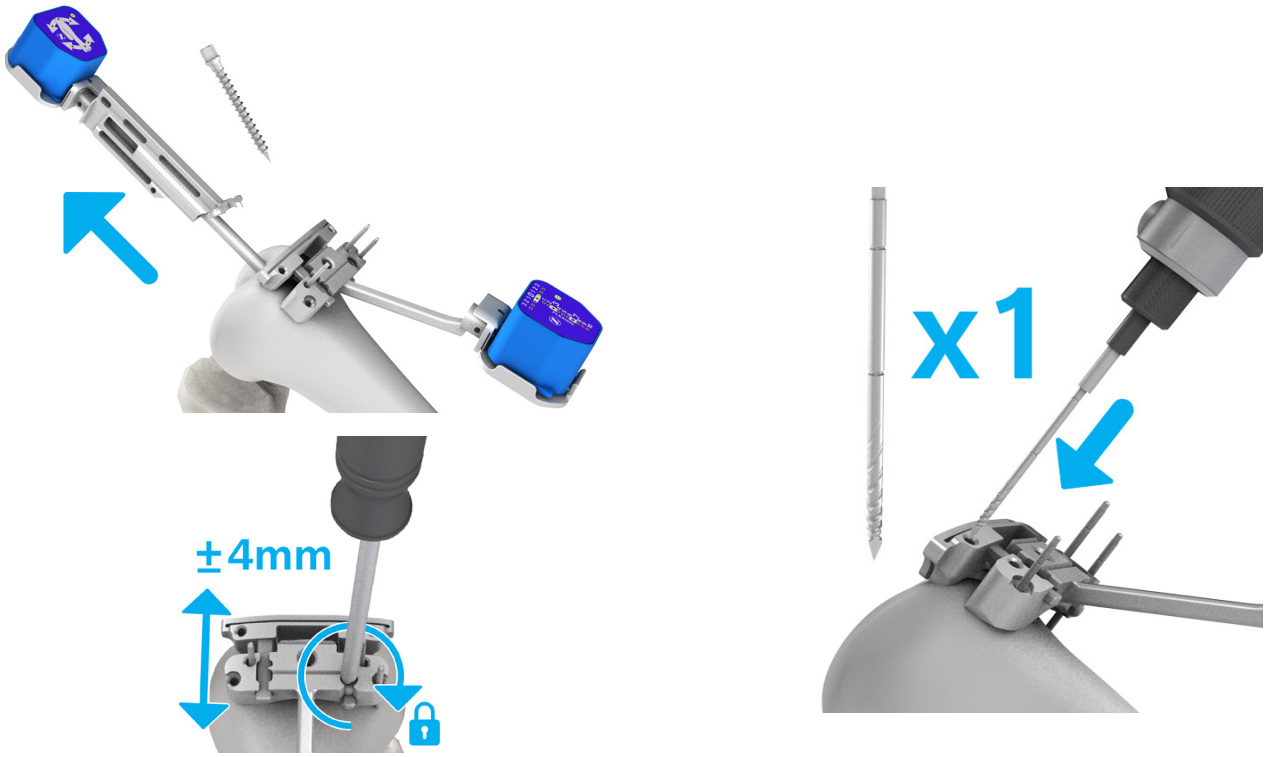

Figure 3.4.3
Distal Femur Cut (cont)

3.4.3 Distal Femoral Cut Guidance (cont)

9. Remove the 3.5 x 38 mm Hex Head Screw and the Femoral Reference.

10. Remove the Femoral Spike using a slaphammer.

    Note: The Persona® Slaphammer and the The NexGen® Slaphammer Extractor can be used to remove the Femoral Spike.

11. Manually adjust the resection level if desired. Loosen the screw on the Femoral Distal Cut Guide to increase/decrease resection by 2 or 4 mm, then tighten the screw.

    Note: The Femoral Saw Slot when secured at the "0" position on the Femoral Distal Cut Guide resects 10 mm off the most distal condyle.

12. Insert a 3.2 mm Headless Trocar Drill Pin in the Femoral Saw Slot using the angular hole in the body of the saw slot to secure it to the bone.

    Warning: The 3.2 mm Headless Trocar Drill Pin used to secure the Femoral Distal Cut Guide and the Femoral Saw Slot to the bone has to be inserted carefully to avoid perforating the second cortex.

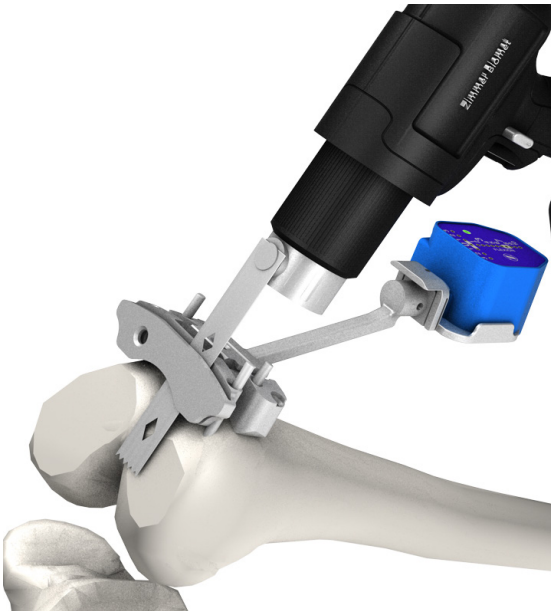

Figure 3.4.3
Distal Femur Cut (cont)

3.4.3 Distal Femoral Cut Guidance (cont)

13. Optionally, a drop rod can be used to check the varus/valgus orientation of the cut before performing the resection. Insert the paddle section of the Alignment Arch into the Femoral Saw Slot. Make sure that the arm of the Alignment Arch is aligned with the A/P plane of the femur. Then, slide a drop rod in the body of the Alignment Arch.

    Note: The Alignment Rod with Coupler can be used to verify the cut.

14. Resect the distal femur.

    Warning: The saw has to be inserted in the Femoral Saw slot and not on top of it. The Femoral Saw Slot is compatible with saw blades of 1.27 mm (0.05 inch) thickness.

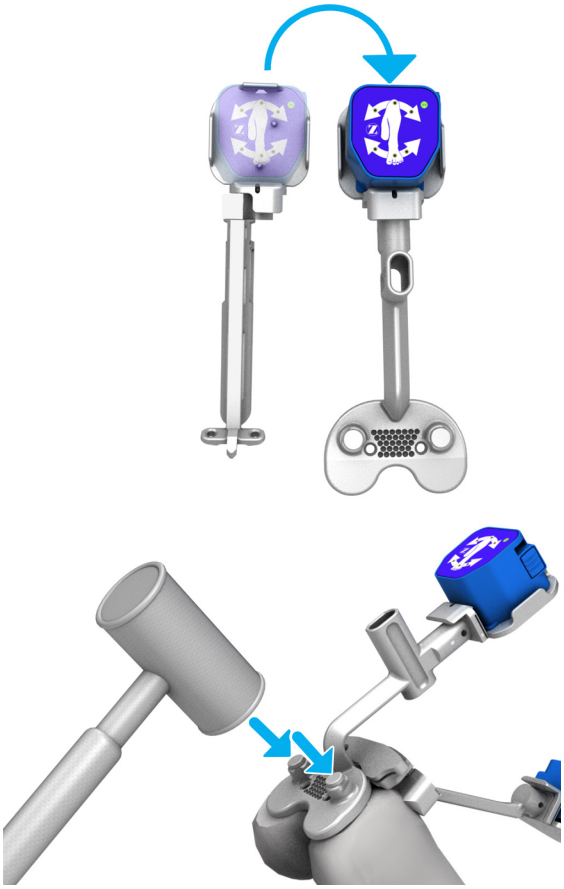

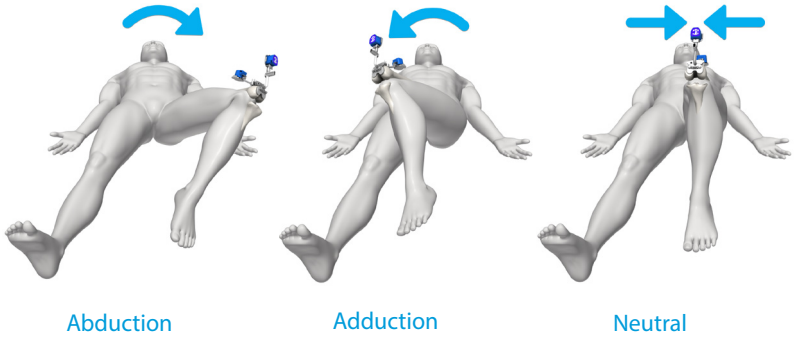

Figure 3.4.4
Distal Femur Cut – Validation

3.4.4 Distal Femoral Cut Validation

1. Remove the Pod attached to the Femoral Reference and clip it to the Validation Tool.

2. Position the flat surface of the Validation Tool onto the distal femoral cut.

3. Secure the Validation Tool on the distal femoral cut by gently impacting the captive spikes. Additionally two 3.5 x 38 mm Hex Head Screw can be used for more stability.

   Warning: Care must be taken when impacting the spikes of the Validation Tool to avoid potential interference between the spikes and the pins used to secure the Femoral Distal Cut Guide and the Femoral Saw Slot. If interference is felt, the Validation Tool should be shifted medio-laterally by 10 mm

For steps 4-6, follow the feedback on the Pod attached to the Validation Tool. The iASSIST V2 Tablet will also provide audio and visual feedback. The number of degrees to the target range for validation movements will be displayed on the Tablet. Ensure adequate stability of the validation tool on the distal femoral cut by manually holding it in place.

4. Bring the leg into abduction until the green LED stops blinking and then hold the knee steady until the acquisition sound is heard.

5. Bring the leg into adduction until the green LED stops blinking and then hold the knee steady until the acquisition sound is heard.

6. Bring the leg into neutral position until the green LED stops blinking and then hold the knee steady until the acquisition sound is heard.

7. The distal femur cut values are displayed on the Pod attached to the Femoral Distal Cut Guide and on the iASSIST V2 Tablet screen.