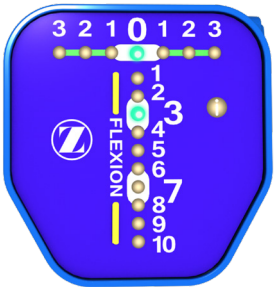

Figure 3.4.4
Distal Femur Cut – Validation (cont)

3.4.4 Distal Femoral Cut Validation (cont)

Note: To restart the distal femur cut validation, press the "Z" button on the Pod attached to the Validation Tool or the "Restart" button on the bottom right of the iASSIST Tablet Screen.

8. A drop rod can optionally be inserted in the handle of the Validation Tool to check the varus/valgus orientation of the cut. Make sure that the arm of the Validation Tool is aligned with the A/P plane of the femur.

   Warning: The Femoral Distal Cut Guide must not have moved in reference to the bone to perform an accurate distal cut validation. When setting femoral rotation after the cut is validated, pay attention not to use the holes created by the validation tool as they may have the same distance between pegs as other femoral rotational setting instruments

9. If two 3.5 x 38 mm Hex Head Screw were used, remove those screws. Remove the Validation Tool by lifting the tool off of the bone by hand, straight away from the cut plane.

10. Remove the 3.2 mm Headless Trocar Drill Pins, the Femoral Saw Slot, and the Femoral Distal Cut Guide.

    Note: If the femur cut needs to be corrected, it is possible to navigate the orientation of the Cut Guide in order to execute the cut again. To do so: 1. Remove the "Reference" Pod attached to the Validation Tool and clip it to the Femoral Reference. 2. Press the "Quit" button, then the "Workflow" button and then "Confirm". 3. Proceed with Femoral Workflow Selection and Registration.

11. Proceed with the tibia registration if continuing with the proximal tibia cut. Refer to the Workflow Selection section for more details.

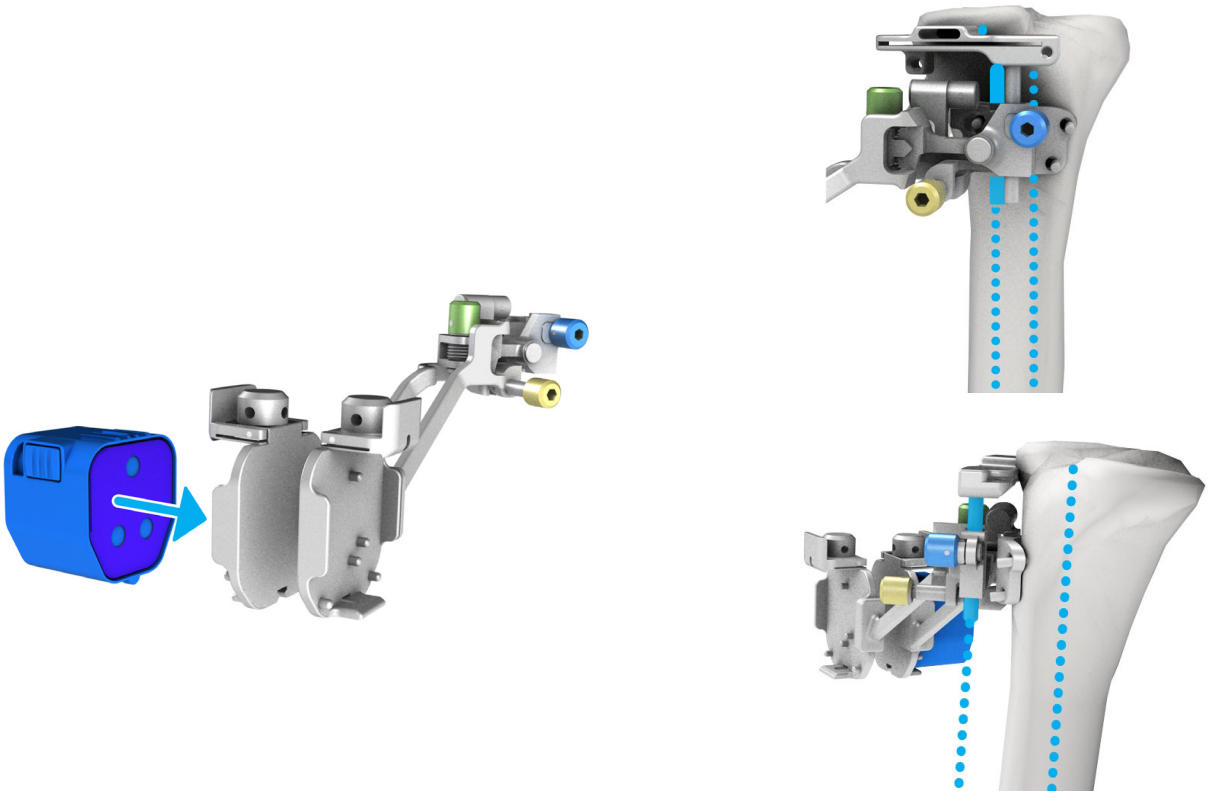

Figure 3.5.1
Tibia Workflow Selection

3.5 Tibia Procedure

Warning: At patient draping, take care to leave the malleoli accessible to the surgeon.

The iASSIST Knee system is compatible with Femur first and Tibia first procedure. See the "Femur Procedure" section to start with the femur.

Note: There are three different techniques for tibia resection. The first one is the Freehand Positioning of the Tibial Adjustment Mechanism and will be described here. Two more techniques will be described in section "Alternative Techniques to Prepare For Tibia Cut".

3.5.1 Workflow Selection for Tibia

1. To Start a Tibia first procedure: For a left knee procedure, clip the "Reference" Pod to the back receptacle of the Tibial Left Adjustment Mechanism.

   For a right knee procedure, clip the "Reference" Pod to the back receptable of the Tibial Right Adjustment Mechanism.

2. Position the Tibial Adjustment Mechanism so that the concave shape at the rear of the instrument hugs the convex ridge of the tibial tubercle. Ensure the position is low enough for the Tibial Cut Guide to attain the desired level of resection.

   Note: As the tubercle may be obscured by the Tibial Adjustment Mechanism, the medial third of the tubercle can be marked with a surgical marking pen in order to ease the rotational alignment of the Tibial Alignment Guide later on.

3. Visually align the elevator rod of the Tibial Cut Guide with the tibial mechanical axis in both the frontal and lateral planes aiming to achieve a neutral orientation.

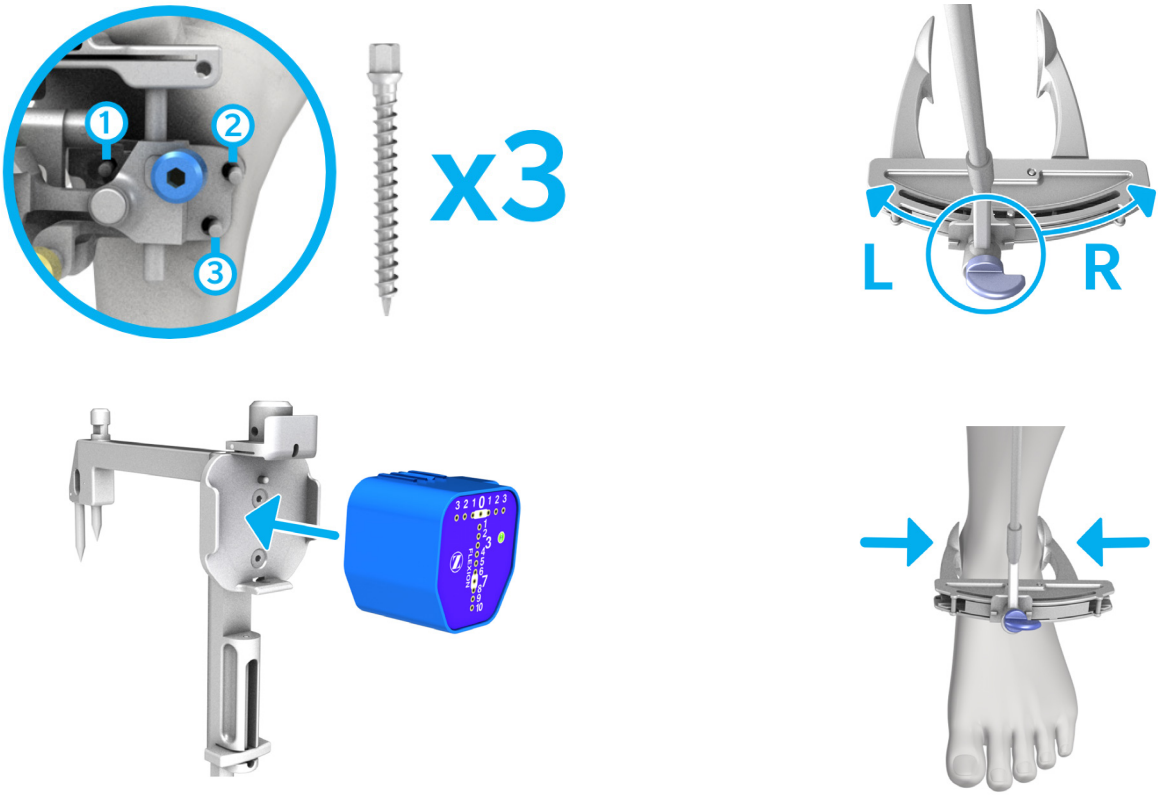

Figure 3.5.1
Tibia Workflow Selection (cont)

3.5.1 Workflow Selection for Tibia (cont)

4. Use three 3.5 x 38 mm Hex Head Screw to secure the Tibial Adjustment Mechanism to the bone by securing a screw in the (1) medial hole, (2) upper lateral hole, (3) lower lateral hole.

   Warning: Control the speed of the power tool or finish tightening the screws manually to avoid stripping the cortex of the tibia. As provided by Zimmer, the 500 RPM adaptor of the Zimmer Universal Power System Surgical Instruments can be used to secure screws.

   Warning: From registration to validation, the instruments must remain stable and properly secured to the bone to ensure accuracy of the system.

5. Clip the "Cut Guide" Pod to the Tibial Alignment Guide and loosen the blue knob on the distal part of the Tibial Alignment Guide.

   Position the rod of the Tibial Alignment Guide to an initial starting orientation per the preset position (L or R) on the distal part of the Tibial Alignment Guide. For a left knee procedure, the preset position is L. For a right knee procedure, the preset position is R.

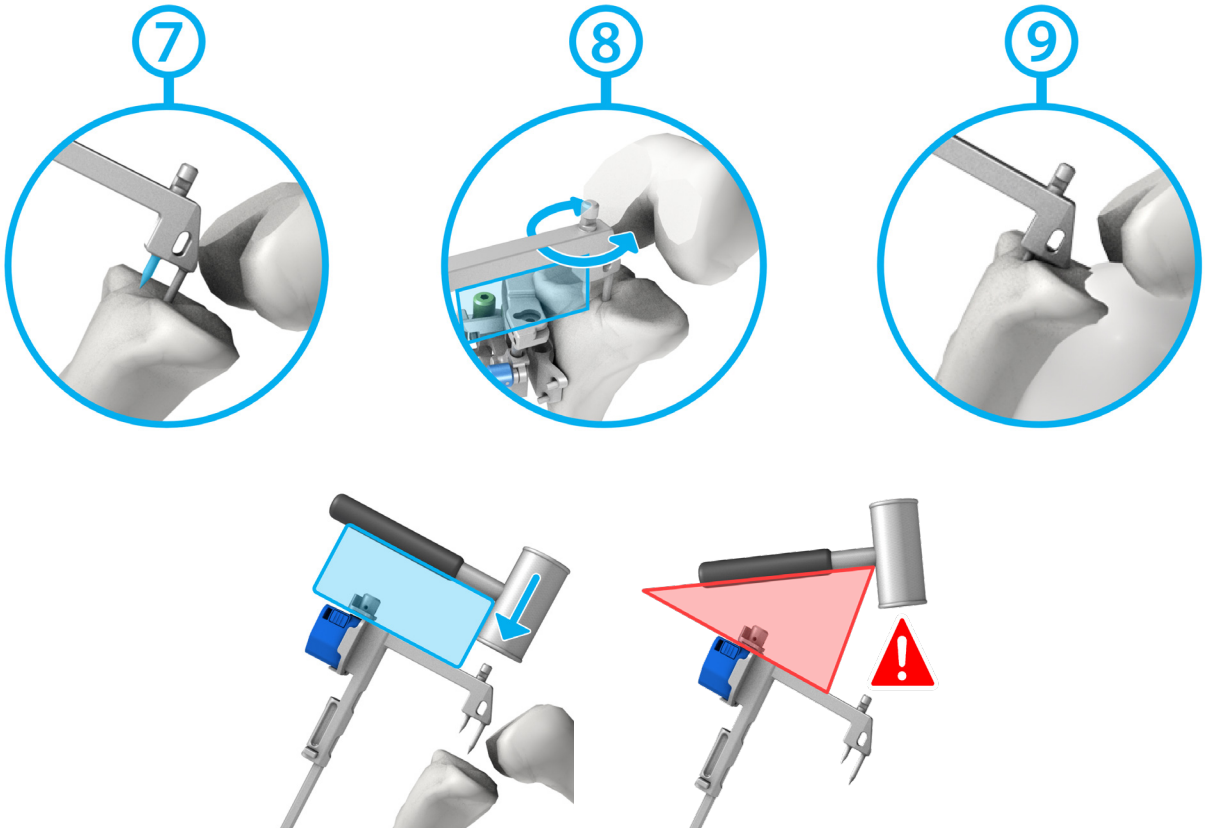

Figure 3.5.1
Tibia Workflow Selection (cont)

3.5.1 Workflow Selection for Tibia (cont)

7. Install the distal part of the Tibial Alignment Guide on the ankle by firmly gripping the distal clamps around the malleoli.

   Note: The Tibial Alignment Guide is designed to be self-centered when placed around the malleoli.

   Warning: Care must be taken when impacting the spikes of the Tibial Alignment Guide to avoid potential interference between the spikes and the screws used to secure the Tibial Adjustment Mechanism.

   Impact the Tibial Alignment Guide in-line with the spikes of the instrument. Off-axis impaction may result in bending of the spikes. The two spikes of the Tibial Alignment Guide must be positioned and inserted carefully in order to avoid loosening.

8. While continuing to firmly grip the distal clamps around the malleoli, partially insert (2-3 mm) the longer spike of the proximal part of the Tibial Alignment Guide into the mechanical axis entry point, without engaging the shorter spike.

9. While continuing to firmly grip the distal clamps around the malleoli, set rotation using the Tibial Alignment Guide. Orient the instrument shaft to align with the medial third of the tubercle.

   Warning: If the medial third of the tubercle was previously marked with a surgical marking pen, the instrument shaft can be aligned with this reference.

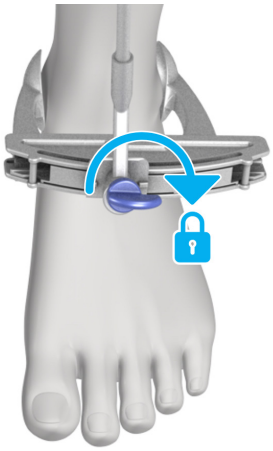

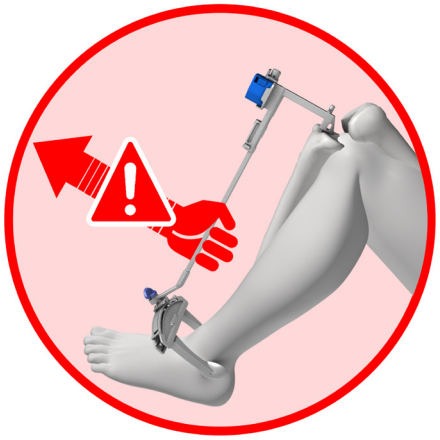

Figure 3.5.1
Tibia Workflow Selection (cont)

3.5.1 Workflow Selection for Tibia (cont)

Warning: Do not pull on the distal part of the Tibial Alignment Guide once both spikes have been inserted into the tibia. Doing so may result in bending of the spikes.

10. While continuing to firmly grip the distal clamps around the malleoli, impact the instrument until both spikes are fully inserted in the tibia.

11. Ensure the distal clamps of the Tibial Alignment Guide remain securely positioned on the malleoli. If a re-adjustment is necessary, ensure the shaft of the guide remains immobile and in proper alignment. Adjust by rotating the distal part of the guide and re-secure the clamps around the malleoli.

12. Lock the blue knob on the distal Tibial Alignment Guide.

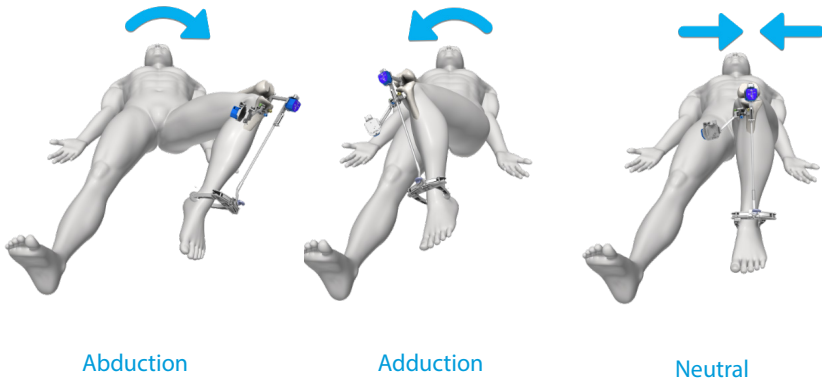

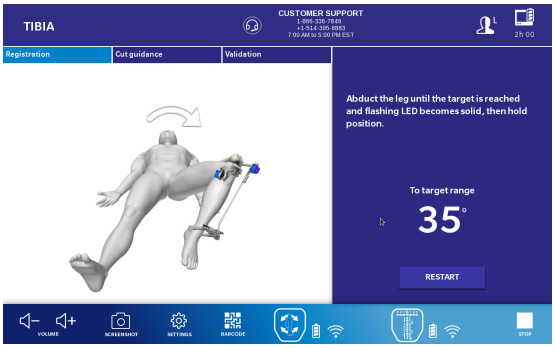

Figure 3.5.2
Proximal Tibia Cut – Tibial Registration

3.5.2 Tibial Registration

1. Ensure the "Cut Guide" Pod is clipped to the Tibial Alignment Guide.
2. Press the "Z" button on the Pod attached to the Tibial Alignment Guide to initiate the registration procedure.

For steps 3-5, follow the feedback on the Pod attached to the Tibial Alignment Guide. The iASSIST V2 Tablet will also provide audio and visual feedback. The number of degrees to the target range for registration movements will be displayed on the Tablet.

3. Bring the leg into abduction until the green LED stops blinking and then hold the knee steady until the acquisition sound is heard.
4. Bring the leg into adduction until the green LED stops blinking and then hold the knee steady until the acquisition sound is heard.
5. Bring the leg into neutral position until the green LED stops blinking and then hold the knee steady until the acquisition sound is heard.

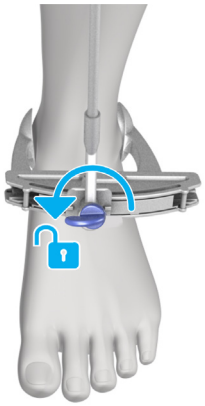

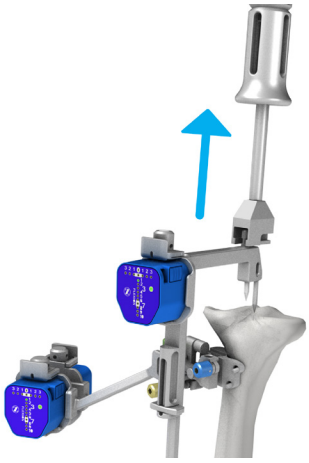

Figure 3.5.2
Proximal Tibia Cut – Tibial Registration

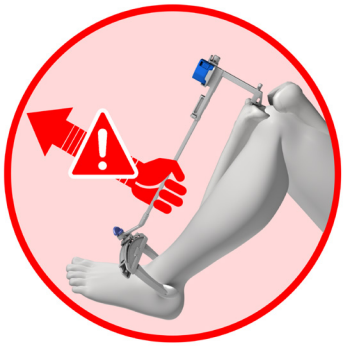

3.5.2 Tibial Registration (cont)

Note: To restart the tibial registration, press the "Z" button on the Pod attached to the Tibial Aligment Guide or the "Restart" button on the bottom right of the iASSIST V2 Tablet Screen.

6. Loosen the blue knob on the distal end of the Tibial Alignment Guide

7. Unspike the proximal part of the Tibial Alignment Guide from the tibia using a slaphammer.

Note: The Persona Slaphammer or the NexGen Slaphammer Extractor can be used to remove the Tibial Alignment Guide.

8. Remove the distal part of the Tibial Alignment Guide from the malleoli.

Note: Do not pull on the distal part of the Tibial Alignment Guide until both spikes are disengaged from the tibia. Doing so may result in bending of the spikes.

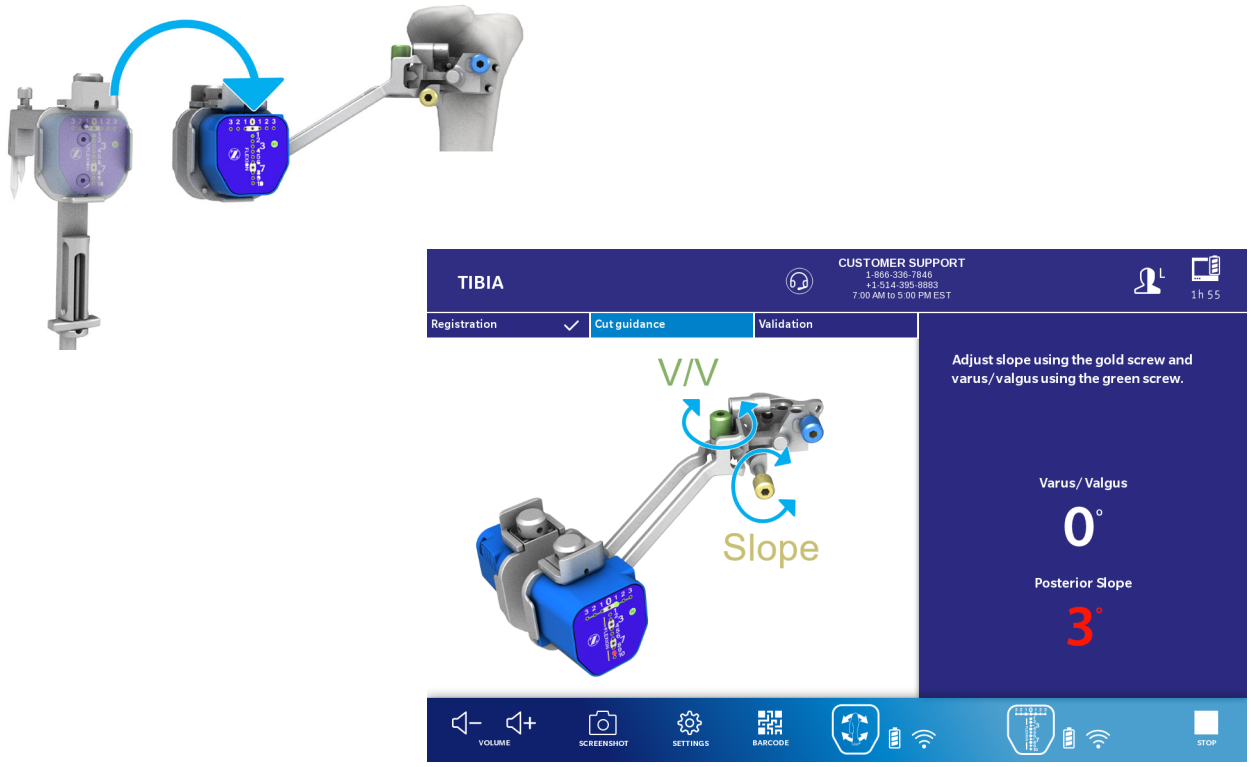

Figure 3.5.3
Proximal Tibial Cut

3.5.3 Proximal Tibial Cut Guidance

1. Unclip the "Cut Guide" Pod from the Tibial Alignment Guide and clip it to the front receptable of the Tibial Adjustment Mechanism.

2. Follow feedback (red and green LEDs) on the "Cut Guide" Pod attached to the Tibial Adjustment Mechanism and adjust tibia slope and varus/valgus using the gold and green screws respectively.

3. Insert a stylus in the Tibial Cut Guide.

   Warning: The leg should be elevated to obtain more than 45° flexion (in relation to the operating table plane) in order for the system to be able to compute angle values.

   Note: The Zimmer Biomet NexGen Posterior Referencing Instruments 2/10 mm or 4/6 mm Tibial Depth Resection Stylus or the NexGen Tibial Depth Resection Stylus can be used to set the resection.

4. Insert the Tibial Cut Guide elevator rod into the Tibial Adjustment Mechanism.

   Note: The Tibial Right/Left Cut Guides are side specific and must be used per the corresponding Tibial Right/Left Adjustment Mechanism.

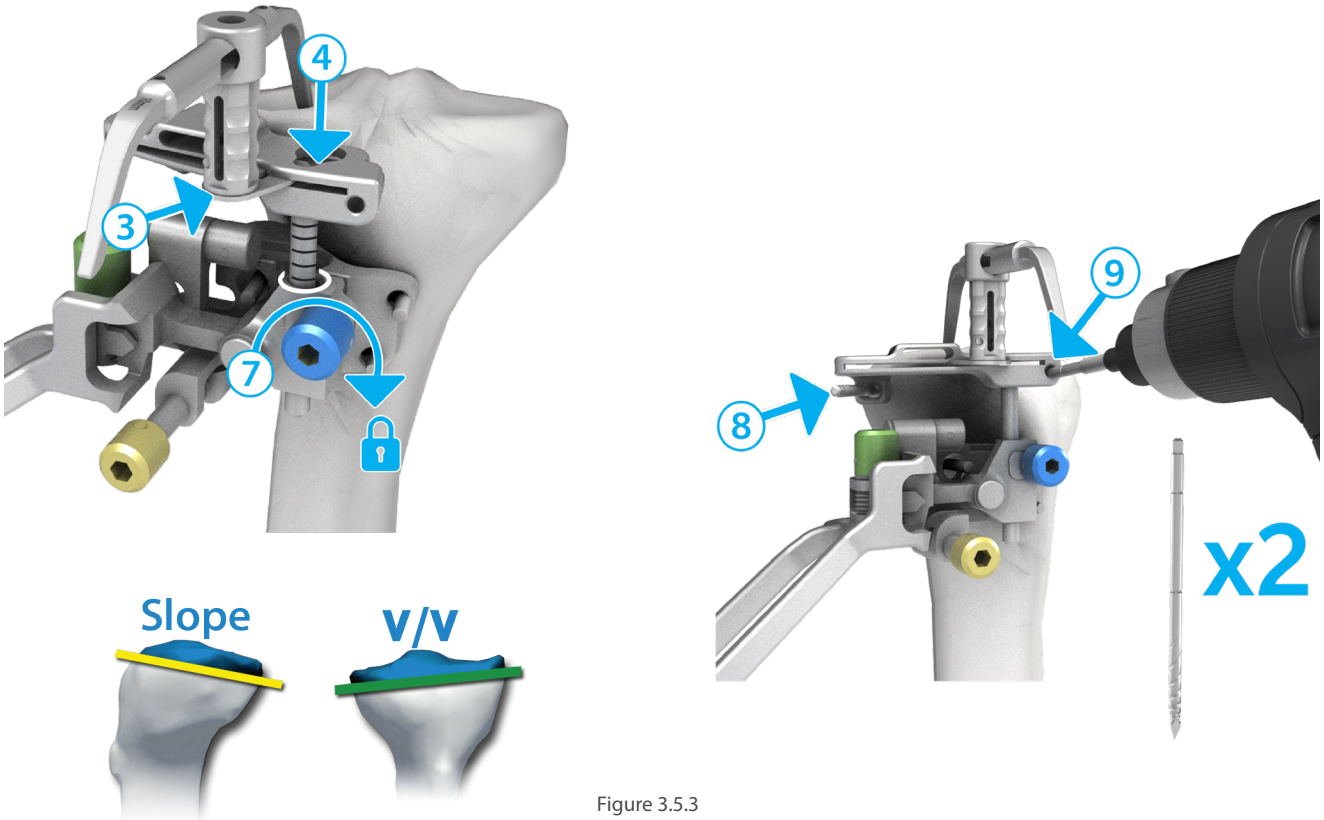

Figure 3.5.3
Proximal Tibial Cut (cont)

3.5.3 Proximal Tibial Cut Guidance (cont)

Note: Each line increment on the elevator rod measures 2 mm.

5. Set the resection level in accordance with the standard surgical technique.

6. Ensure that the Tibial Cut Guide is well seated on the anterior contour of the tibia (i.e. medial side of the Tibial Cut Guide must be in contact with the tibia).

7. Lock the Tibial Cut Guide in place by hand-tightening the blue screw on the Tibial Adjustment Mechanism.

8. Secure the Tibial Cut Guide onto the tibia by inserting a 3.2 mm Headless Trocar Drill Pin in the medial hole.

9. Further stabilize the Tibial Cut Guide onto the tibia by inserting a 3.2 mm Headless Trocar Drill Pin in the lateral hole.

   Warning: The fasteners used to secure the Tibial Cut Guide to the bone must be inserted carefully to avoid perforating the second cortex and to avoid potential interference with the screws used to secure the Tibial Adjustment Mechanism.

   Note: Alternatively, a 3.5 x 38 mm Hex Head Screw can be inserted in the medial hole instead of the 3.2 mm Headless Trocar Drill Pin. When using a 3.5 x 38 mm Hex Head Screw, the screw must only be inserted halfway as to avoid movement of the Tibial Cut Guide.

10. Remove the stylus.

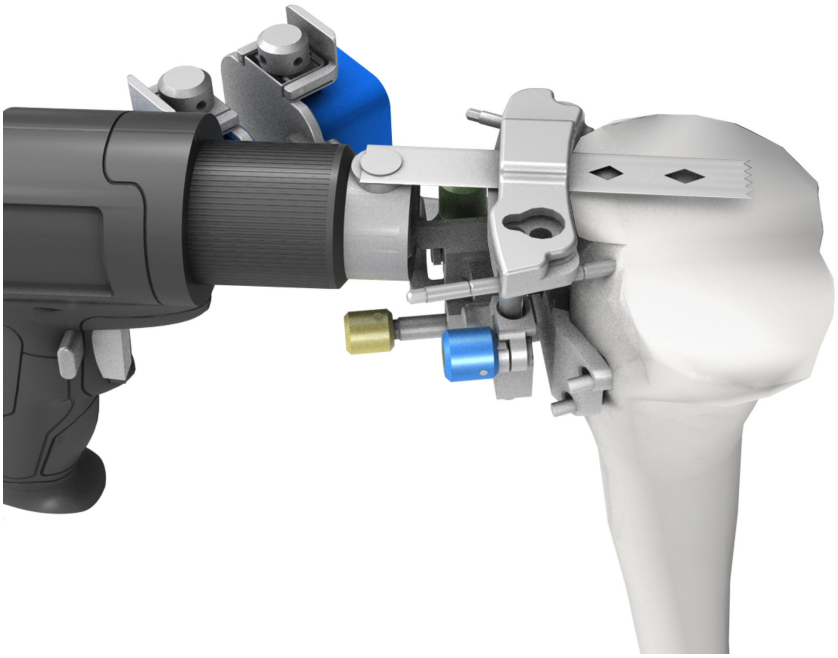

Figure 3.5.3
Proximal Tibial Cut (cont)

3.5.3 Proximal Tibial Cut Guidance (cont)

Warning: If the Tibial Adjustment Mechanism is not fixed securely or moves, the tibia registration should be performed again. Repeat the steps described in the "Tibia Registration" section.

11. A drop rod can optionally be used to check the varus/valgus orientation of the cut before performing the resection. Insert the paddle section of the Alignment Arch in the Tibial Cut Guide. Make sure that the arm of the Alignment Arch is aligned with the A/P plane of the tibia. Then, slide a drop rod in the body of the Alignment Arch.

Note: The Alignment Rod with Coupler can be used to verify the cut.

12. If a drop rod and an Alignement Arch were used, remove them from the Tibial Cut Guide.

13. Resect the proximal tibia.

Warning: The saw has to be inserted in the Tibial Cut Guide saw slot and not on top of it. The Tibial Cut Guide is compatible with saw blades of 1.27 mm (0.05 inch) thickness.

Figure 3.5.4
Proximal Tibial Cut – Validation

3.5.4 Proximal Tibial Cut Validation

1. Remove the "Cut Guide" Pod attached to the front receptacle of the Tibial Adjustment Mechanism and clip it to the Validation Tool.
2. Position the flat surface of the Validation Tool on the proximal tibia cut.
3. Secure the Validation Tool on the proximal tibia cut by gently impacting the captive spikes. Additionally, two 3.5 x 38 mm Hex Head Screw can be used for more stability. The validation procedure will automatically start.

Warning: Care must be taken when impacting the spikes of the Validation Tool to avoid potential interference between the spikes and the screws used to secure the Tibial Adjustment Mechanism and the Tibial Cut Guide. If interference is felt, the Validation Tool should be shifted by 10 mm mediolaterally.

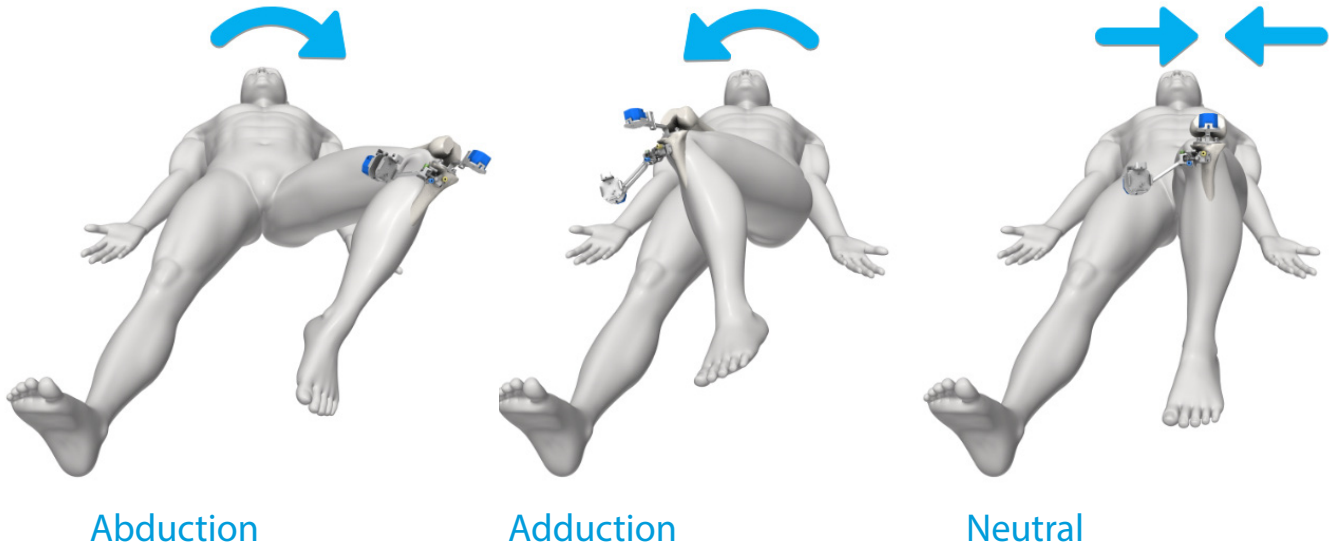

Figure 3.5.4
Proximal Tibial Cut – Validation

3.5.3 Proximal Tibial Cut Guidance (cont)

For steps 4-6, make sure to hold the Validation Tool in place with one hand while performing the validation steps and follow the feedback on the Pod attached to the Validation Tool. The iASSIST V2 Tablet will also provide audio and visual feedback. The number of degrees to the target range for validation movements will be displayed on the Tablet.

4. Bring the leg into abduction until the green LED stops blinking and then hold the knee steady until the acquisition sound is heard.

5. Bring the leg into adduction until the green LED stops blinking and then hold the knee steady until the acquisition sound is heard.

6. Bring the leg into neutral position until the green LED stops blinking and then hold the knee steady until the acquisition sound is heard.

7. The proximal tibia cut values are displayed on the Pod attached to the Validation Tool and on the iASSIST V2 Tablet screen.

   Note: To restart the proximal tibia cut validation, press the "Z" button on the Pod attached to the Validation Tool or the "Restart" button on the bottom right of the iASSIST V2 Tablet Screen.

8. A drop rod can optionally be inserted in the handle of the Validation Tool to verify the varus/valgus orientation of the cut. Make sure that the arm of the Validation Tool is aligned with the A/P plane of the tibia.

9. If two 3.5 x 38 mm Hex Head Screw were used, remove those screws. Remove the Validation Tool by lifting the tool off of the bone by hand, straight away from the cut plane.

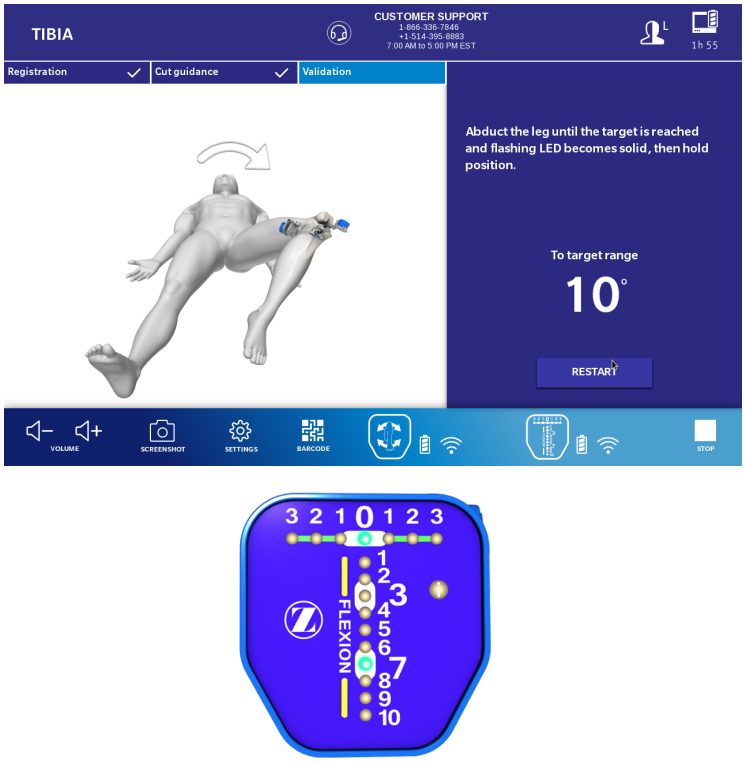

Figure 3.5.4
Proximal Tibial Cut – Validation

3.5.3 Proximal Tibial Cut Guidance (cont)

Warning: Ensure to hold the Tibial Adjustment Mechanism while removing the 3.5 x 38 mm Hex Head Screws from it. Make sure to remove those screws in the angular orientation of the initial hole. Removing the last scew that was put in first (first screw in, last screw out) can help to keep the right orientation.

Note: If the proximal tibial cut needs to be corrected, it is possible to navigate the orientation of the Cut Guide in order to execute the cut again. To do so: 1. Remove the "Cut Guide" Pod attached to the Validation Tool and clip it to the front receptacle of the Tibial Adjustment Mechanism. 2. Press the "Z" button on the pod attached to the front receptacle of the tibial adjustment mechanism. 3. Follow feedback (red and green LEDs) on the pod attached to the tibial adjustment mechanism and adjust tibia slope and varus/valgus using the gold and green screws respectively.

10. Remove the 3.2 mm Headless Trocar Drill Pins, the Tibial Cut Guide, the 3.5 x 38 mm Hex Head Screws and the Tibial Adjustment Mechanism.

11. Proceed with the femur registration if continuing with the distal femur cut. Refer to the Workflow Selection section for more details.

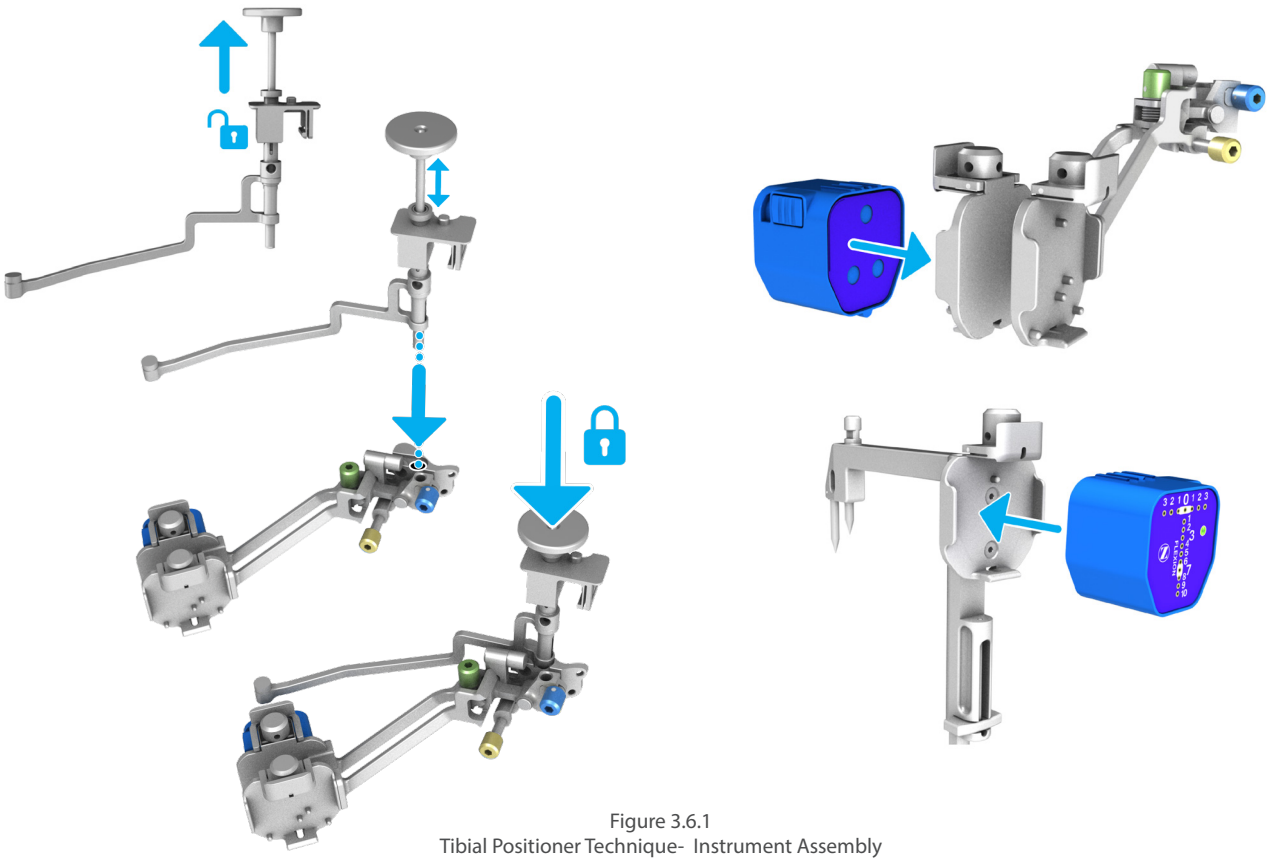

Figure 3.6.1
Tibial Positioner Technique- Instrument Assembly

3.6 Alternate Techniques to Prepare Tibia Cut

The following section describes two alternate techniques for positioning the Tibial Adjustment Mechanism on the tibia.

3.6.1 Tibial Positioner Technique

Instrument assembly

Note: The Tibial Positioners are side specific and must be used with the corresponding Tibial Adjustment Mechanism. Ensure to pick the appropriate instruments according to the patient side.

1. Pull out the handle of the Tibial Positioner.
2. Connect the Tibial Positioner to the Tibial Adjustment Mechanism while still pulling on the handle.
3. Push on the handle of the Tibial Positioner to lock the mechanism in place.
4. Clip the "Reference" Pod to the back receptacle of the Tibial Adjustment Mechanism.
5. Clip the "Cut Guide" Pod to the Tibial Alignment Guide.

Workflow Selection

1. Loosen the blue knob on the distal part of the Tibial Alignment Guide.
2. Position the rod of the Tibial Alignment Guide to an initial starting orientation per the preset position (L or R) on the distal part of the Tibial Alignment Guide. For a left knee procedure, the preset position is L. For a right knee procedure, the preset position is R.

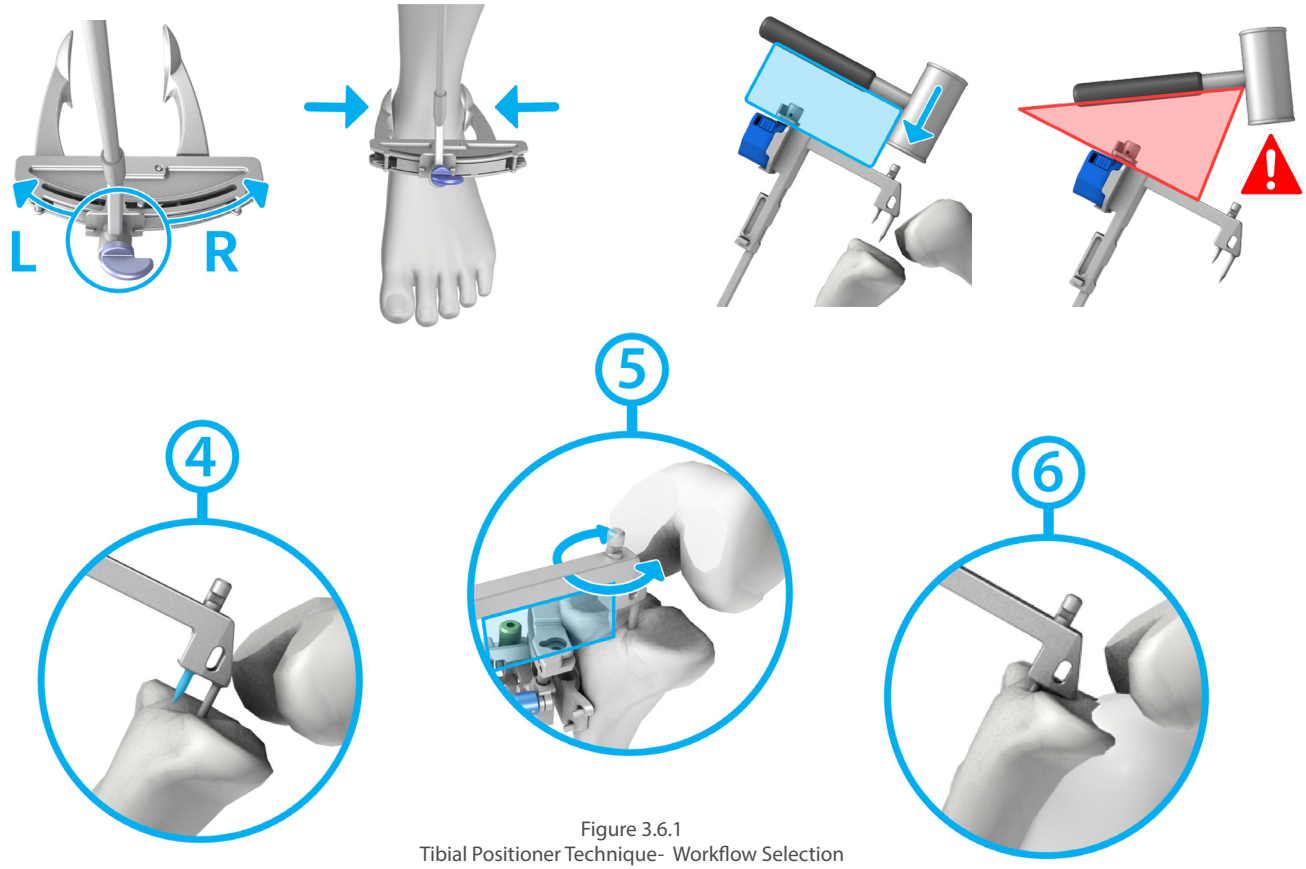

Figure 3.6.1
Tibial Positioner Technique- Workflow Selection

3.6.1 Tibial Positioner Technique (cont)

3. Install the distal part of the Tibial Alignment Guide on the ankle by firmly gripping the distal clamps around the malleoli.

   Note: The Tibia Alignment Guide is designed to be self-centered when placed around malleoli.

   Warning: After wrapping/preparing the ankle, the surgeon should still be able to palpate the malleoli.

4. While continuing to firmly grip the distal clamps around the malleoli, partially insert (2-3 mm) the longer spike of the proximal part of the Tibial Alignment Guide through the mechanical axis entry point, without engaging the shorter spike.

5. While continuing to firmly grip the distal clamps around the malleoli, set rotation using the Tibial Alignment Guide. Orient the instrument shaft to align with the medial third of the tubercle.

6. While continuing to firmly grip the distal clamps around the malleoli, impact the instrument until both spikes are fully inserted in the tibia.

7. Ensure the distal clamps of the Tibial Alignment Guide remain securely positioned on the malleoli. If a readjustment is necessary, ensure the shaft of the guide remains immobile and in proper alignment. Adjust by rotating the distal part of the guide and re-secure the clamps around the malleoli.