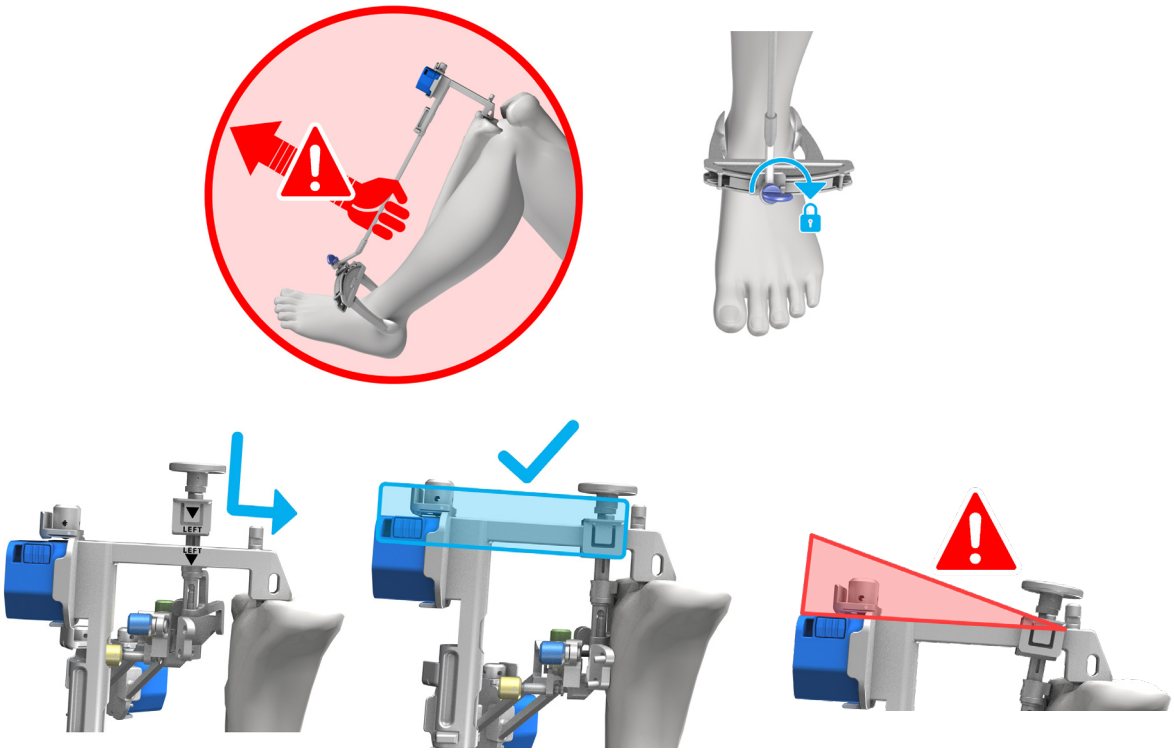

Figure 3.6.1
Tibial Positioner Technique- Workflow Selection (cont)

3.6.1 Tibial Positioner Technique (cont)

Workflow Selection (cont)

- Warning: Impact the Tibial Alignment Guide in-line with the spikes of the instrument. Off-axis impaction may result in bending of the spikes. The two spikes of the Tibial Alignment Guide must be positioned and inserted carefully in order to avoid loosening.

- Warning: Do not pull on the distal part of the Tibial Alignment Guide until both spikes have been fully removed from the tibia. Doing so might result in bending of the spikes.

8. Lock the blue knob on the distal Tibial Alignment Guide.

9. Attach the Tibial Positioner and the Tibial Adjustment Mechanism assembly onto the proximal part of the Tibial Alignment Guide by aligning the arrows laser-marked on the instruments.

10. Slide the Tibial Positioner towards the bone until the Tibial Adjustment Mechanism sits on the anterior cortex of the tibia.

    - Warning: Ensure that the Tibial Positioner is well seated on the horizontal shaft of the Tibial Alignment Guide.

    - Warning: For a small size tibia, the Tibial Adjustment Mechanism should be placed on the tubercle. In this case, care must be taken when securing the Tibial Adjustment Mechanism to the bone using the 3.5 x 38 mm Hex Head Screw to avoid potential interference between the screws and the spikes of the Tibial Alignment Guide.

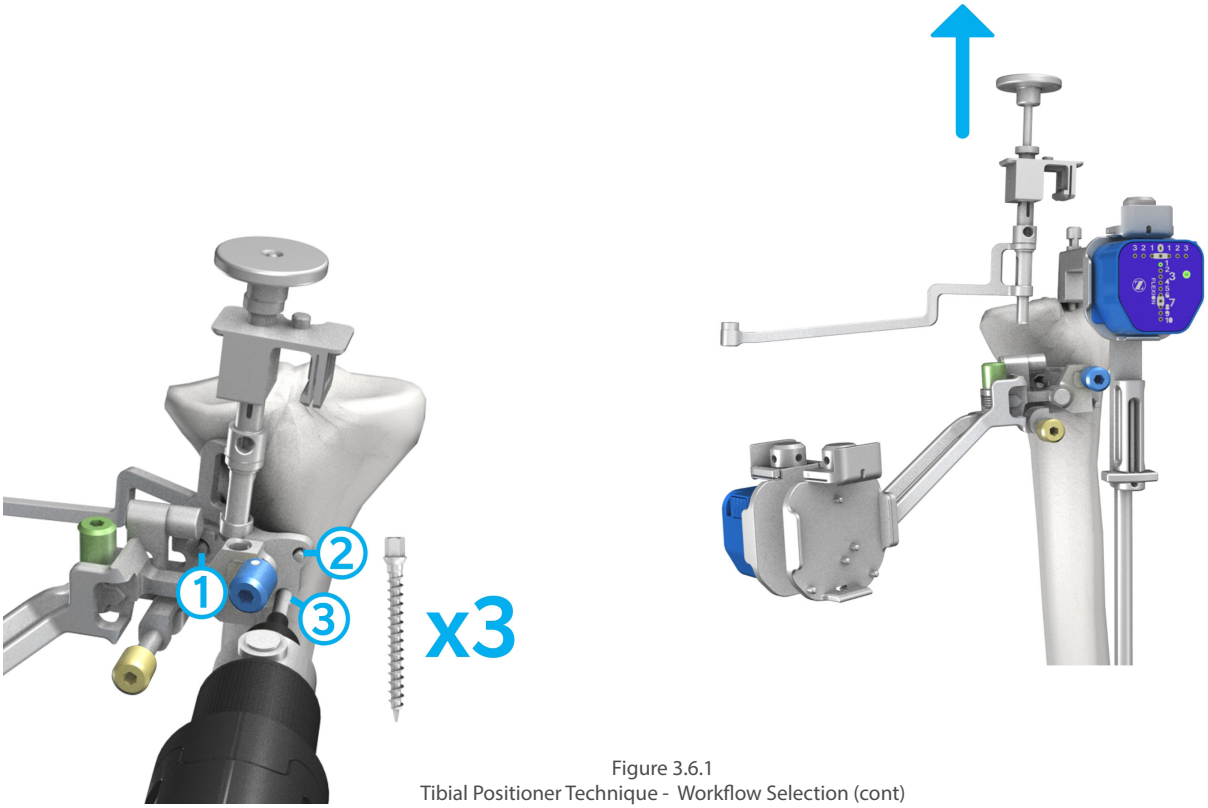

Figure 3.6.1
Tibial Positioner Technique - Workflow Selection (cont)

3.6.1 Tibial Positioner Technique (cont)

Workflow Selection (cont)

11. Use three 3.5 x 38 mm Hex Head Screw to secure the Tibial Adjustment Mechanism to the bone. Secure the Tibial Adjustment Mechanism to the bone by first securing screws in the medial hole, secondly in the upper lateral hole, and finally in the lateral lower hole.

12. To initiate the tibial registration, release the Tibial Positioner from the Tibial Adjustment Mechanism by pulling upwards on the Tibial Positioner handle.

13. To complete the procedure, resume from step 1 of the "Tibia Registration" section.

Warning: Control the speed of the power tool or finish fixating the screws manually to avoid stripping the cortex of the tibia. As provided by Zimmer, the 500 RPM adaptor of the Zimmer Universal Power System Surgical Instruments can be used to secure screws. From registration to validation, the instruments must remain stable and properly fixated to the bone to ensure accuracy of the system.

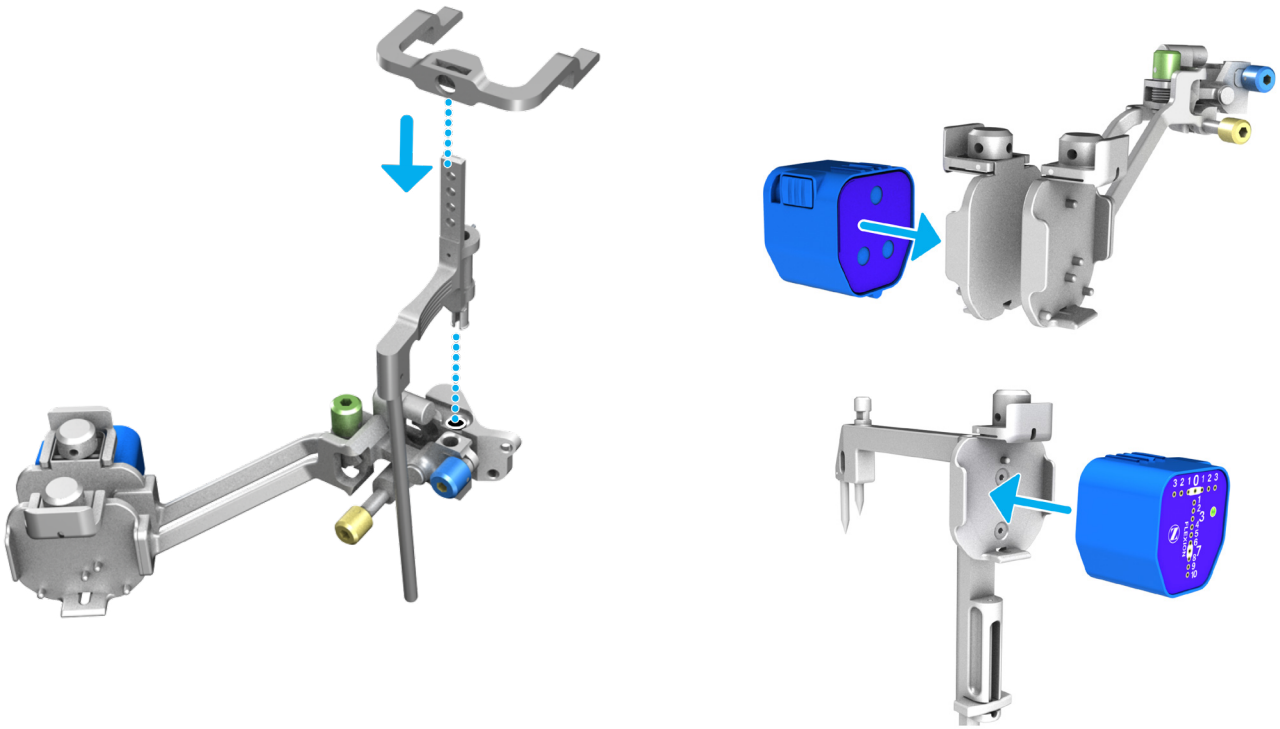

Figure 3.6.2
Tibial Aligner Technique - Instruments Assembly

3.6.2 Tibial Aligner Technique

The following section describes an alternate technique for positioning the Tibial Adjustment Mechanism on the tibia using the Tibial Aligner rather than the Tibial Positioner.

Warning: After wrapping/preparing the ankle, the surgeon should still be able to palpate the malleoli.

Instruments Assembly

1. For a left knee procedure, clip the "Reference" Pod to the back receptacle of the Tibial Left Adjustment Mechanism. For a right knee procedure, clip the "Reference" Pod to the back receptable of the Tibial Right Adjustment Mechanism.
2. Clip the "Cut Guide" Pod to the Tibial Alignment Guide.
3. Assemble the Tibial Aligner by aligning the markings of the Tibial Aligner Upper Assembly and the Tibial Aligner Lower Assembly.

   Note: If desired, the Tibial Aligner can be used without the upper assembly.
4. Connect the Tibial Aligner to the Tibial Adjustment Mechanism.

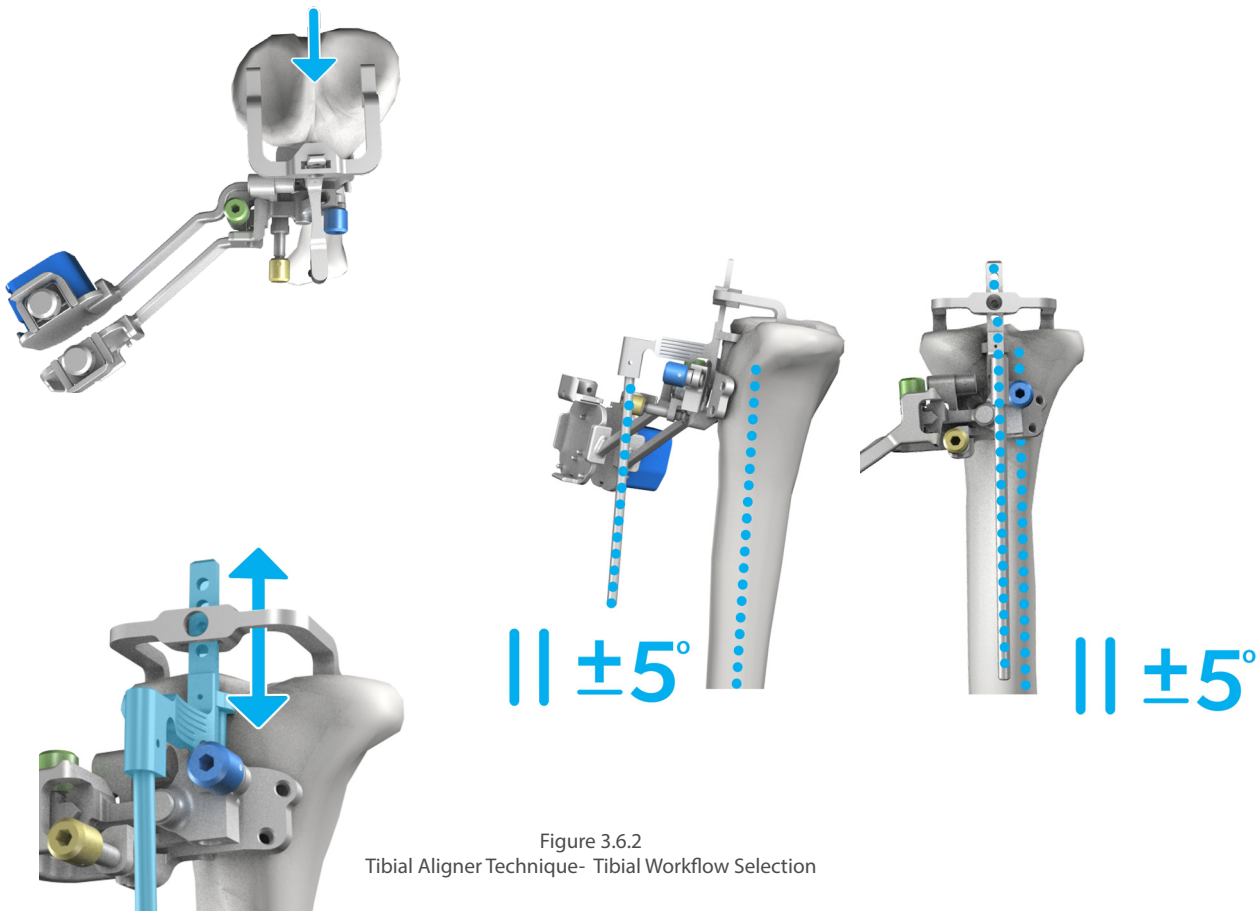

Figure 3.6.2
Tibial Aligner Technique- Tibial Workflow Selection

Tibial Workflow Selection

1. Place the pegs of the Tibial Aligner on the proximal tibial plateau and sit the Tibial Adjustment Mechanism on the anterior cortex of the tibia.

2. Preset the height of the Tibial Adjustment Mechanism by moving the lower part of the Tibial Aligner up or down.

   Note: Each position represents 6 mm increments.

3. Position the Tibial Adjustment Mechanism so that the concave shape at the rear of the instrument hugs the convex ridge of the tibial tubercle. Ensure the position is low enough for the Tibial Cut Guide to attain the desired level of resection.

   Note: As the tubercle may be obscured by the Tibial Adjustment Mechanism, the medial third of the tubercle can be marked with a surgical marking pen in order to ease the rotational alignment of the Tibia Alignment Guide later on.

4. Visually align the Tibial Adjustment Mechanism in varus/valgus and in tibia slope by aligning the rod of the Tibial Aligner parallel to the tibial mechanical axis in both the frontal and sagittal planes.

   Note: The rod of the Tibial Aligner has a built-in slope of 5°.

   Warning: Ensure that the Tibial Adjustment Mechanism is positioned within the specified ranges. Not doing so may result in potential interference between the screws and the spikes of the Tibial Alignment Guide when the spikes of the latter instrument are impacted into the tibia.

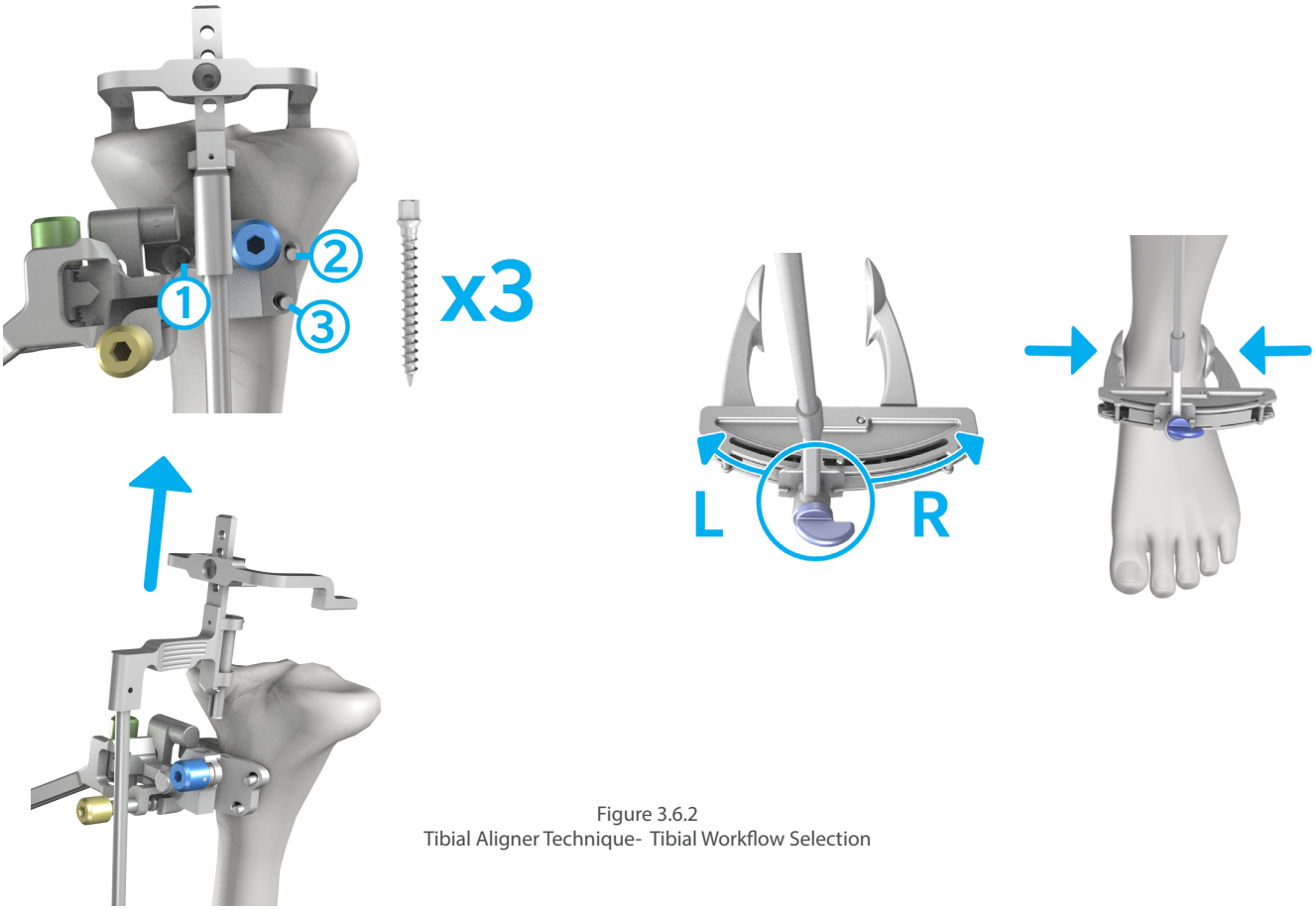

Figure 3.6.2
Tibial Aligner Technique- Tibial Workflow Selection

Tibial Workflow Selection (cont)

5. Use three 3.5 x 38 mm Hex Head Screw to secure the Tibial Adjustment Mechanism to the bone, by first securing screws in the medial hole, secondly in the upper lateral hole and finally in the lower lateral hole.

   Warning: Control the speed of the power tool or finish fixating the screws manually to avoid stripping the cortex of the tibia. As provided by Zimmer, the 500 RPM adaptor of the Zimmer Universal Power System Surgical Instruments can be used to secure screws. From registration to validation, the instruments must remain stable and properly fixated to the bone to ensure accuracy of the system.

6. Disconnect the Tibial Aligner by grasping the instrument by the grip and pulling it up and away from the Tibial Adjustment Mechanism.

7. Loosen the blue knob on the distal part of the Tibial Alignment Guide.

8. Position the rod of the Tibial Alignment Guide to an initial starting orientation per the preset position (L or R) on the distal part of the Tibial Alignment Guide. For a left knee procedure, the preset position is L. For a right knee procedure, the preset position is R.

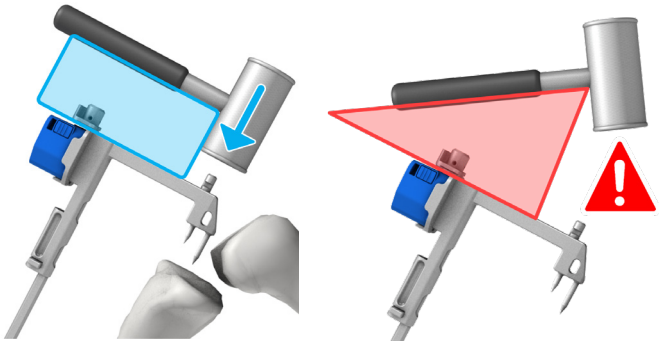

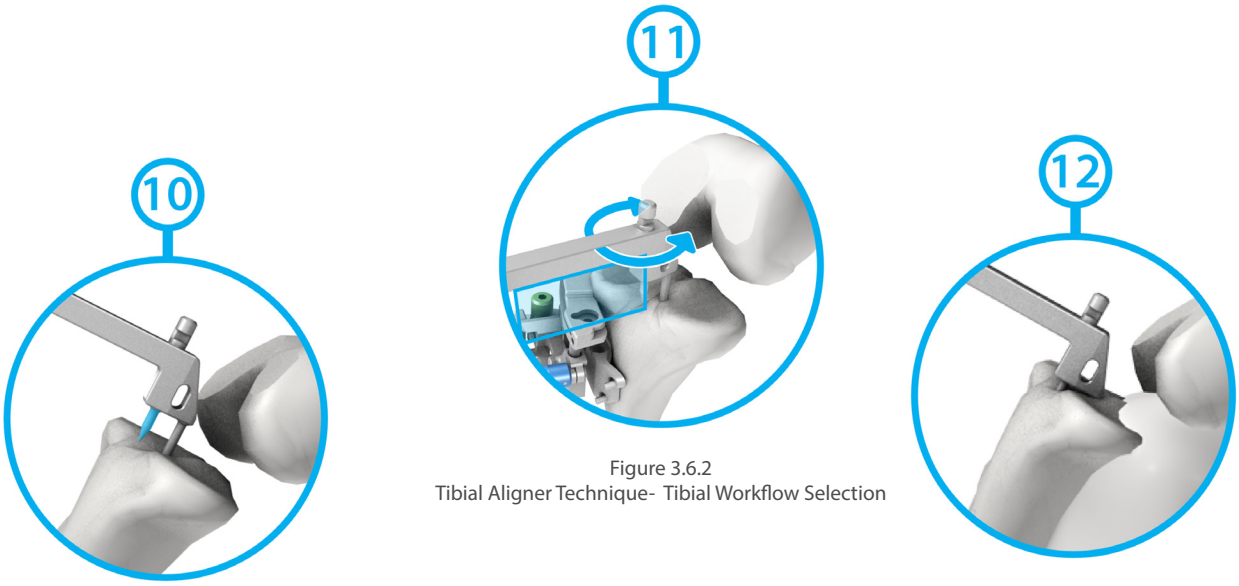

Figure 3.6.2
Tibial Aligner Technique- Tibial Workflow Selection

Tibial Workflow Selection (cont)

9. Install the distal part of the Tibial Alignment Guide on the ankle by firmly gripping the distal clamps around the malleoli until both spikes are fully inserted into the tibia.

   Note: The Tibial Alignment Guide is designed to be self-centered when placed around the malleoli.

10. While continuing to firmly grip the distal clamps around the malleoli, partially insert (2-3 mm) the longer spike of the proximal part of the Tibial Alignment Guide through the mechanical axis entry point, without engaging the shorter spike.

11. While continuing to firmly grip the distal clamps around the malleoli, set rotation using the Tibial Alignment Guide. Orient the instrument shaft to align with the medial third of the tubercle.

    Note: If the medial third of the tubercle was previously marked with a surgical marking pen, the instrument shaft can be aligned with this reference.

12. While continuing to firmly grip the distal clamps around the malleoli, impact the instrument until both spikes are fully inserted in the tibia.

    Warning: Impact the Tibial Alignment Guide in-line with the spikes of the instrument. Off-axis impaction may result in bending of the spikes. The two spikes of the Tibial Alignment Guide must be positioned and inserted carefully in order to avoid loosening.

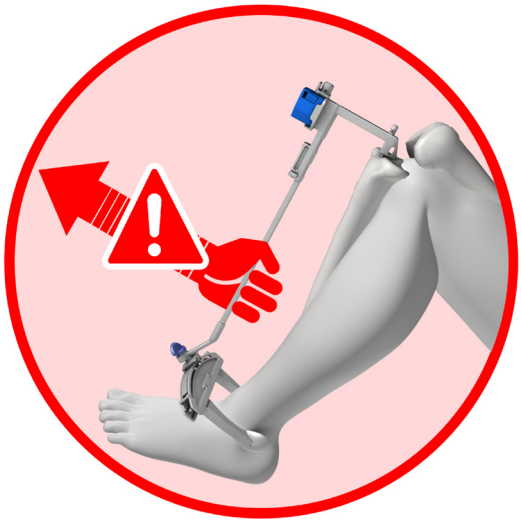

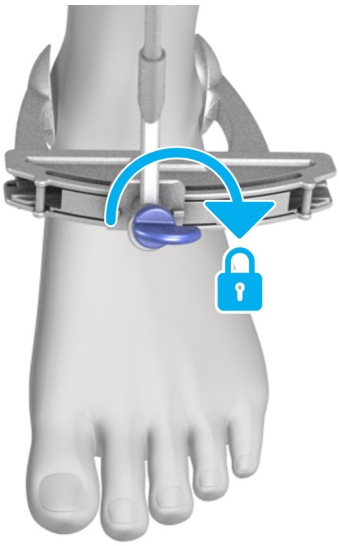

Figure 3.6.2
Tibial Aligner Technique- Tibial Workflow Selection

Tibial Workflow Selection (cont)

13. Ensure the distal clamps of the Tibial Alignment Guide remain securely positioned on the malleoli. If a re-adjustment is necessary, ensure the shaft of the guide remains immobile and in proper alignment. Adjust by rotating the distal part of the guide and re-secure the clamps around the malleoli.

    Warning: Do not pull on the distal part of the Tibial Alignment Guide once both spikes have been inserted into the tibia. Doing so may result in bending of the spikes.

14. Lock the blue knob on the distal Tibial Alignment Guide.

15. Press the "Z" button on the Pod attached to the Tibial Alignment Guide to initiate the registration procedure.

16. To complete the procedure, resume from step 1 of the "Tibia Registration" section.

Figure 3.7
Bilateral Procedure

3.7 Surgical Technique for Bilateral Procedure

Note: The same iASSIST Knee Pod Kit can be used only if the application was not closed. Intraoperative calibration does not have to be repeated if the same iASSIST Knee Pod Kit is used.

To perform a bilateral procedure, perform the following steps:

1. Once the cut and the validation have been performed on the first knee (distal femur and proximal tibia), unclip the Pods from the instruments to preserve battery life.

2. When ready to perform the second knee, press on the "Settings" button located at the bottom of the iASSIST V2 Tablet screen.

   Warning: Always ensure that an additional iASSIST Knee Pod Kit is available since battery life could be insufficient for a bilateral procedure. In this case follow the Pod replacement procedure detailed in the "Pod Replacement" section. Do not re-use the 3.2 mm Headless Trocar Drill Pins and the 3.5 x 38 mm Hex Head Screw. Use four new 3.2 mm Headless Trocar Drill Pins and four new 3.5 x 38 mm Hex Head Screw for the second leg since they are single-use.

3. Select the patient side by clicking on the "L" icon for the left knee or the "R" icon for the right knee.

4. Confirm by clicking the "Save" button.

5. Assemble the instruments and the Pods as described in section "Instrument Assembly".

6. Proceed with the Femur Registration or the Tibia Registration.

   Note: It is possible to get detailed instructions on the bilateral procedure by clicking on the "Stop" button and then clicking on the "Workflow" button.

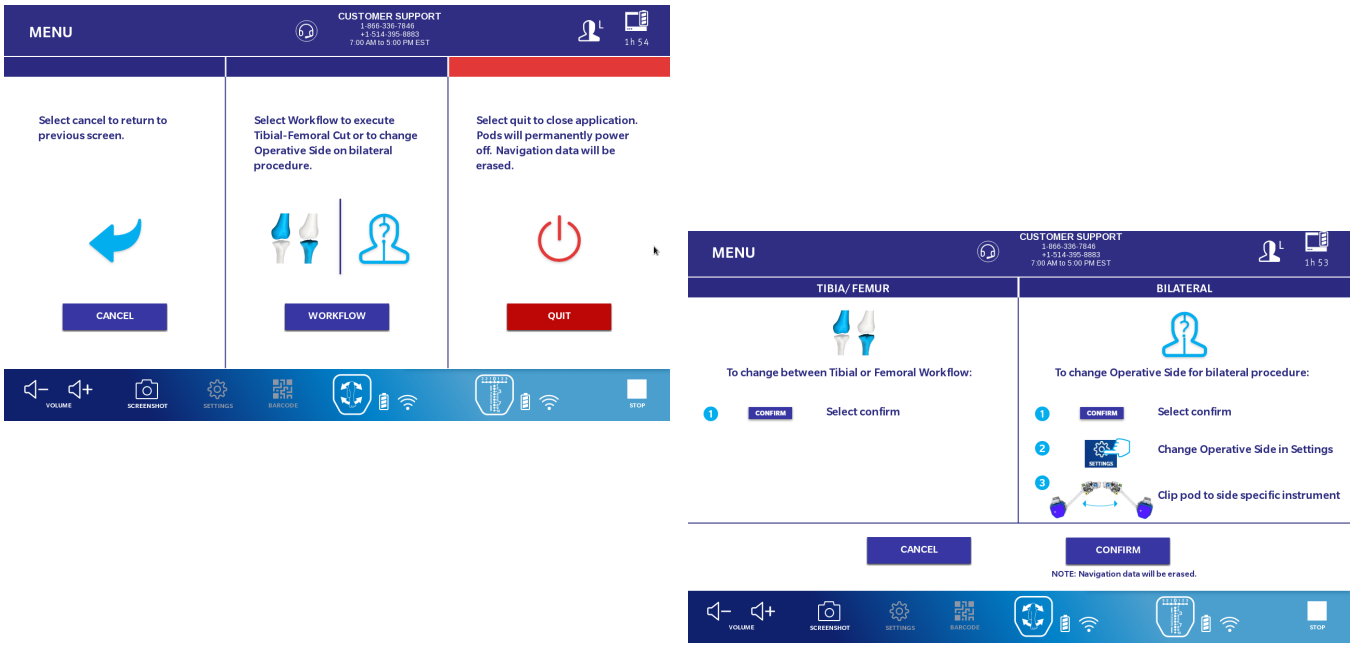

Figure 3.8
Stop Panel

3.8 Surgical Transition (Stop Button)

To stop and exit the application at the end of the surgery, click on the "Stop" button on the bottom right side of the iASSIST V2 Tablet screen. The Menu Panel will then be displayed with three different options.

3.8.1 Cancel

If the "Stop" button was clicked accidentally, it is possible to go back to the previous panel by clicking the "Cancel" button on the left of the screen.

3.8.2 Workflow Selection

To change operative side on a bilateral procedure or to change between Tibial or Femoral procedures, click on the "Worklow" button. A new panel will then open with the appropriate instructions.

3.8.3 Quit the application

To quit the application, click on the red "Quit" button on the right side of the screen.

Warning: The application must be restarted between two surgeries and a new Pod kit has to be used.

3.9 Pod Replacement (Sterility Compromised - Faulty Pod)

In the case a Pod drains its battery before the end of a surgical procedure or if a Pod gets contaminated, or malfunctions, it can be replaced by another one without restarting the application following these instructions:

1. Open another iASSIST Knee 2-Pod Kit.
2. Press on the barcode button.
3. Scan the 2D barcode located on the iASSIST Knee Pod Kit.
4. Power-on each of the new Pods.
5. Once all the Pods have joined the network, perform the intraoperative calibration as described in the "Powering-On Pods and Intraoperative Calibration" section.
6. Once the new Pods are calibrated, discard the drained or contaminated Pod and replace it with the same type of Pod from the newly calibrated Pods (for example, if a "Reference" Pod attached to the Validation Tool has drained its battery, remove the Pod from the Validation Tool and attach the newly calibrated Pod to the instrument).
7. Continue the surgical procedure where it was stopped to replace Pod.

4. Postoperative Guide

All the operations described in this section must be performed from the Tablet home screen.

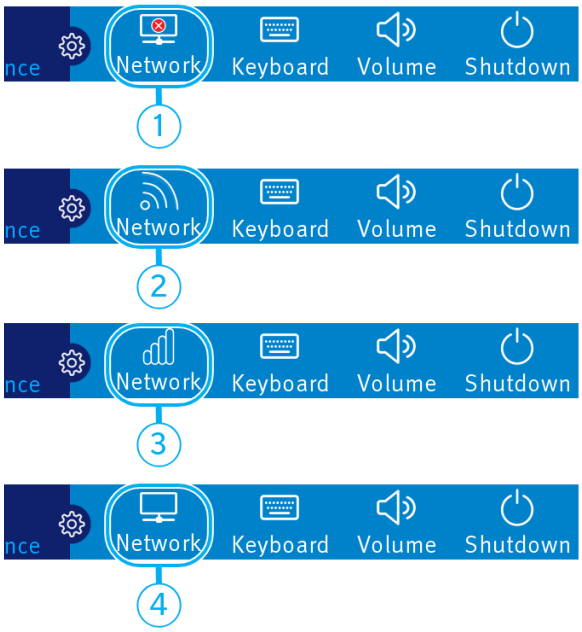

1) The iASSIST V2 Tablet is not connected to the Internet or the Internet is deactivated

2) The iASSIST V2 Tablet is trying to connect to the Wi-Fi

3) The iASSIST V2 Tablet is connected to the Internet via Wi-Fi

4) The iASSIST V2 Tablet is connected to the Internet via Ethernet cable

Figure 4.1
Internet Connection

4.1 Connection to the internet

Although it is not necessary to perform an iASSIST case, the iASSIST V2 Tablet can be connected to the Internet either by Ethernet cable or by Wi-Fi. This connection can be used, for example, to download system upgrades.

Note: The Internet connection will be deactivated while the iASSIST application is open.

4.1.1 Connection by Ethernet Cable

1. Open the hatch on the left side of the iASSIST V2 Tablet (See figure 2.1) to connect the Ethernet adapter (which is included in the iASSIST V2 Tablet Shipping Case) to one of the two USB slots.
2. Connect the Ethernet adapter to the Tablet and to the local Ethernet cable.

4.1.1 Connection by Wi-Fi

In order to connect the system via Wi-Fi:

1. From the home menu, ensure the Wi-Fi is activated on the tablet (see figure 4.1 for explanations on the network status). If not, press on the "P2" button on the top left side of the iASSIST V2 Tablet.
2. Click on the Network button.
3. Select an available network. If needed, enter appropriate credentials for the chosen network, then click on the "Connect" button.

Warning: It is strongly recommended to protect against malicious unauthorized use by ensuring that the iASSIST V2 Tablet is never left unattended while powered on. Only Zimmer Biomet Representatives are authorized to update the system with approved software. Zimmer Biomet takes no responsibility for malicious activity that may result from lack of current, appropriate IT security practices.

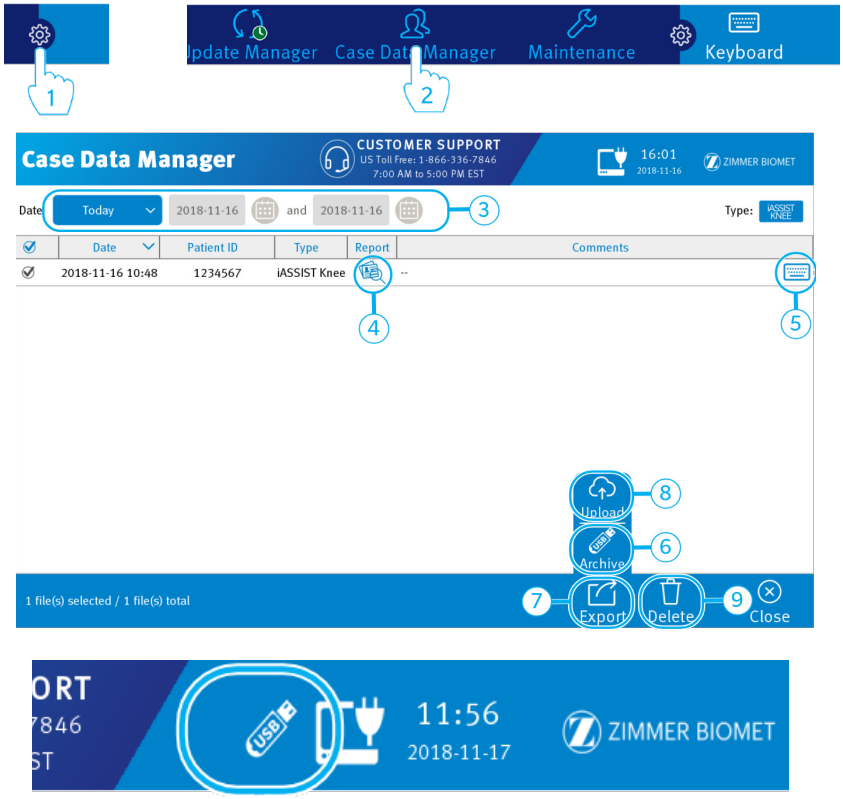

Figure 4.2
Case Data Manager

4.2 Case Data Manager

The Case Data manager is used to store, access, archive and upload surgery related information on cases treated with the system.

4.2.1 Starting the Case Data Manager

1. After turning on the system, click the "Gear" icon (1) on the left bottom of the screen to open the System Utilities menu.

2. Click on the "Case Data Manager" icon (2).

4.2.2 Navigating the Case Data Manager

Displayed cases can be sorted by date, patient ID or case selection by clicking the appropriate header. Cases can be filtered by date using the date selection (3). Surgical information about a case can be displayed by clicking the "Report" icon (4). The Type Selector enables to display the cases performed with the iASSIST Knee application.

Comments can be entered about a case by clicking the "Keyboard" icon (5).

4.2.3 Archiving cases on a USB key

To archive a case on a USB key:

1. Ensure that a USB key is connected to the iASSIST V2 Tablet and that its icon is displayed on the top right corner of the computer screen. To connect a USB key, open the hatch on the left side of the Tablet (See figure 2.1) to connect it to one of the two USB slots.

2. Select the cases to archive by clicking their checkboxes .

3. Click the "Export" icon (7) and then click the "Archive" icon (6). All information relative to the selected cases will be archived on a USB key in a compressed folder.

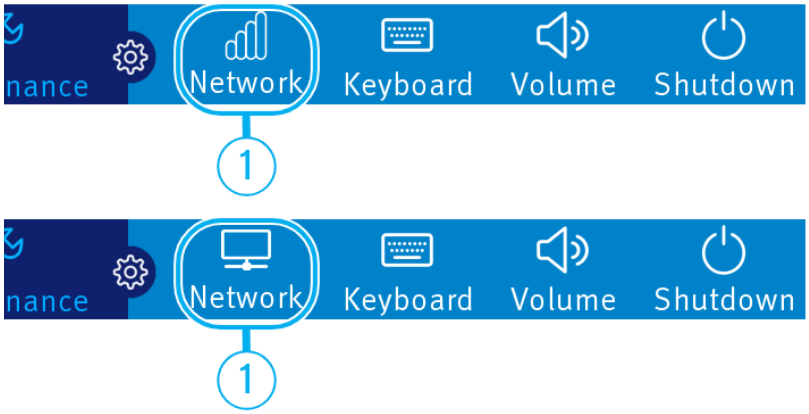

Figure 4.2
Case Data Manager (cont)

4.2 Case Data Manager (cont)

4.2.4 Uploading cases on the Zimmer Biomet Case Database

To upload cases on the Zimmer Biomet case database, when reporting an incident or to collect information related to a PER when filing a complaint:

1. Ensure that the system has an active Internet connection.
2. Select the cases to upload by clicking their checkboxes.
3. Click the "Export" icon (7) and then click the "Upload" icon (8). All information relative to the selected cases will be uploaded to the Zimmer Biomet case database.

4.2.5 Deleting cases

To delete cases:

1. Select all cases to delete by clicking their checkboxes.
2. Click the "Delete" icon.

To exit the Case Data manager, click on the "Close" button on the bottom right of the screen.

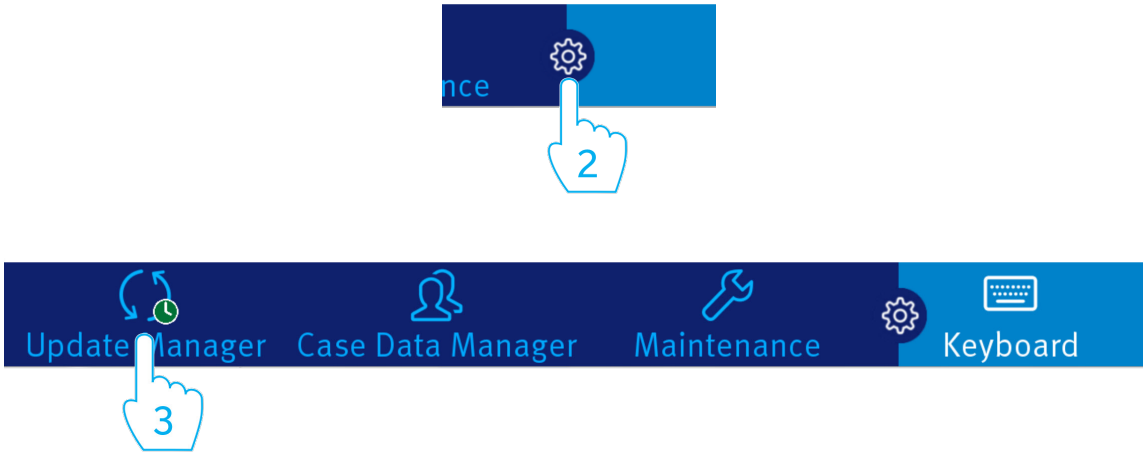

Figure 4.3
Updating the System

4.3 Updating the System

System updates must be performed by sales representatives.

4.3.1 Update via Internet Connection

1. Before starting the installation process, ensure that the system has an active Internet connection, and that the system is connected to an AC outlet.

   Note: Public networks using captive portals to enable Internet connection are not supported.

2. Click the "Gear" icon to open the System Utilities menu and click the "Update Manager" icon.

4.3.2 Update via USB Key

If no Internet connection is available, contact customer support to obtain a USB key containing the installation files and an installation license key.

1. Before starting the installation process, ensure that the USB key is connected to the system and that its icon is displayed on the top right corner of the computer screen; also ensure that the system is connected to an AC outlet. To connect a USB key, open the hatch on the left side of the iASSIST V2 Tablet (See figure 2.1) to connect it to one of the two USB slots.

2. Click the "Gear" icon to open the System Utilities menu and click the "Update Manager" icon. Available operating system updates are installed automatically and a reboot might be required to complete the installation. The release reports for available application updates are then displayed for review.

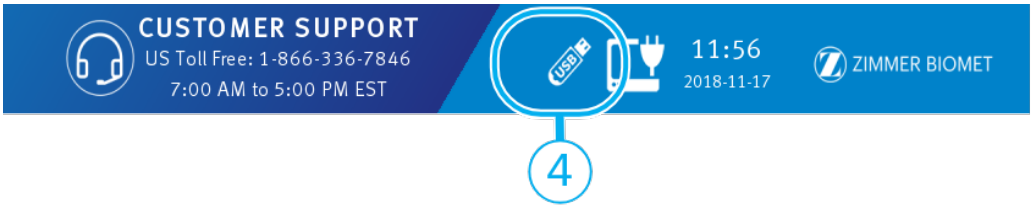

Figure 4.3
Updating the System (cont)

4.3 Updating the System (cont)

4.3.2 Update via USB Key (cont)

3. To update the application, click on "Accept" and enter the installation license key in the dialog box that opens.

   Warning: When prompted to install an application update, it is important to review the associated release report to determine if the changes are understood well enough to continue using the system. If training has not yet been received by all users of the system, it is recommended to decline installation and contact customer support to request training.

Warning: In rare cases, where the use of the product could have serious negative impacts on the user or patient health and a field action is in effect, application updates will be mandatory and the user will have five days to update the system with this application. After those five days, there will be no possibility to decline. If training has not yet been received by all user of the system, contact customer support to arrange for training a soon as possible.

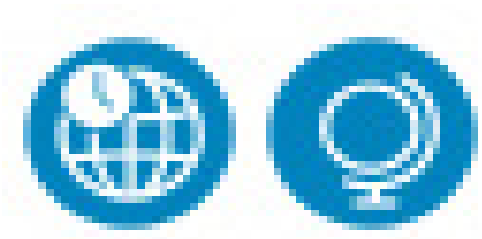

Figure 4.4
Date, Time and Regulatory Region

4.4 Date, Time and Regulatory Region

The system is configured for a specific regulatory region. If it changes, the region should be updated through the regulatory region button in the maintenance mode.

It is also possible to change the date and time of the Tablet through the maintenance mode button. Contact customer support to obtain the password needed to access the maintenance mode.

4.5 Shutdown of the iASSIST V2 Tablet

1. Exit all applications in use, if any.
2. Click on the "Shutdown" button in the bottom right of the home screen or press the power button on the top right hand corner of the iASSIST V2 Tablet.
3. Confirm by clicking the "OK" button.

Warning: Do not unplug the power cord from the Tablet or try to force close it by long pressing on the power button to initiate a shutdown as it may result in loss of data or cause hardware damage. The proper way to turn off the computer requires exiting all applications in use before initiating the shutdown task.