5. Equipment Inventory and Cleaning/Sterilization Methods

The "iASSIST Knee Master Instruments Kit" section below lists the instruments supplied by Zimmer CAS and Zimmer Biomet for iAssist TKA surgeries and describes the sterilization and specific cleaning instructions recommended for each instrument.

Reusable instruments must be cleaned after use prior to sterilization. They should not be sterilized in the protective bag or packaging supplied with them. All sterilizations should be performed using standard and regularly maintained equipment. For cleaning, reusable instruments require a manual or automated process. All multi-component instruments must be disassembled before cleaning.

Manual cleaning process

Prepare the enzymatic cleaning solution (per the manufacturer's recommendations). Immerse the instrument in the prepared cleaning solution and allow to soak for a minimum of 5 minutes, and at least 10 minutes for the instruments with difficult to access areas.

Thoroughly clean the instrument with a soft bristled brush, paying particular attention to crevices and other hard to clean areas until all visible soil is removed. Use a syringe to flush hard to clean areas. Lumens should be cleaned with a long, narrow, soft-bristled brush (i.e. pipe cleaner).

Prepare the enzymatic cleaning solution (per manufacturer's recommendations) in an ultrasonic cleaner. Immerse the instrument in prepared cleaning solution and allow to sonicate for a minimum of 10 minutes.

Rinse the instrument with purified water for a minimum of 1 minute ensuring all visible evidence of detergent is removed. Dry article with a clean, soft cloth.

Screws and other mechanisms should be checked and lubricated with a medical grade surgical lubricant normally after each cleaning as determined upon inspection. The above instructions that are instrument type dependent are indicated in the iASSIST Knee Master Instruments Kit section below.

Automated cleaning process

Disassemble any multi-component instrument under cold running tap water for 2 minutes. Submerge instruments in an enzyme solution and soak for 10 minutes.

After the 10-minute soak, use a soft bristle brush to remove any visible soil. Pay special attention to crevices, mated surfaces and hard to reach areas. Lumens should be cleaned with a long, narrow, softbristled brush (i.e. pipe cleaner).

Prepare an enzyme solution (per manufacturer's recommendations) in a sonication unit. Completely submerge the instrument in the cleaning solution and sonicate for 10 minutes. Rinse the instruments in purified water for at least 1 minute.

Place instruments in a suitable washer/disinfector basket and process through a standard instrument washer/disinfector cleaning cycle and follow instructions in Table 1 or Table 2 on the next page.

Table 5.1 Typical US Automated Washer/ Disinfector Cycle for Surgical Instruments

Step	Description
1	2 minutes prewash with cold tap water
2	20 seconds enzyme spray with hot tap water
3	1 minute enzyme soak
4	15 seconds cold tap water rinse (X2)
5	2 minutes detergent wash with hot tap water (64-66°C/146-150 °F)
6	15 seconds hot tap water rinse
7	2 minutes thermal rinse (80-93 °C/176-200°F)
8	10 seconds purified water rinse with optional lubricant (64-66°C/146-150 °F)
9	7 to 30 minutes hot air drying (116°C/240°F)

⚠ Warning: The washer/disinfector manufacturer's instructions should be strictly adhered to. Use only cleaning agents recommended for the specific type of automated washer/ disinfector. A washer/disinfector with approved ecacy (e.g. CE mark, FDA approval, and validation according to ISO 15883) should be used.

Table 5.2 Typical European Automated Washer/ Disinfector Cycle for Surgical Instruments

Step	Description
1	5 minutes prewash with cold tap water
2	10 minutes alkaline cleaning agent wash at 55°C
3	2 minutes rinse with neutralizer
4	1 minute rinse with cold tap water
5	Disinfection at 93°C with hot purified water until A0 3000 is reached (approx. 10 minutes)
6	40 minutes hot air drying at 110°C

⚠ Warning: Before every surgery the user must:

1. Verify that all instruments have been sterilized.

2. Verify that the instruments are in good condition to perform the operation. If any signs of fatigue or deterioration are noticed, do not use the iAssist Knee System and contact the technical support.

5.1 Sterilization Parameters

Steam Sterilization (Autoclave)

Cycle Type	Temperature[1]	Exposure Time[1]	Minimum Dry Time[2]	Minimum Cool Time[3]
Pre-Vacuum	132 °C (270 °F)	4 minutes	40 minutes	30 minutes

[1] Both the given cycle temperature and time can be increased to 134°C + 3°C (273.2°F + 5.4°F) and 18 minutes according to local requirements outside of the United States such as in the European Union.

[2] Drying times vary according to load size and should be increased for larger loads.

[3] Cooling times vary according to the type of sterilizer used, device design, temperature and humidity of ambient environment, and type of packaging used. Cooling process should comply with ANSI/AAMI ST79.

The methodology, "Combination Cleaning and Disinfection Instructions", described in the Reprocessing Manual, available at http://www.zimmerbiomet.com, is also applicable.

5.2 iASSIST Knee Master Instruments Kit

Additional specific cleaning instructions as defined in the text are indicated as applicable to each instrument as follows:

- A Requires disassembly
- B Requires water jet to flush difficult to access areas
- C Screw/unscrew components while flushing the area
- D Requires a minimum 10 minutes ultrasonic cleaning cycle in an enzymatic solution
- E Screw/mechanism should be checked and lubricated with a medical grade surgical lubricant normally after each cleaning as determined upon inspection

Description	Product ID	Qty	Sterilization and Specific Cleaning Instructions	Additional Notes
Femoral Spike 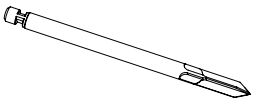	20-8011-051-00	1	Autoclave	
Tibial Alignment Guide 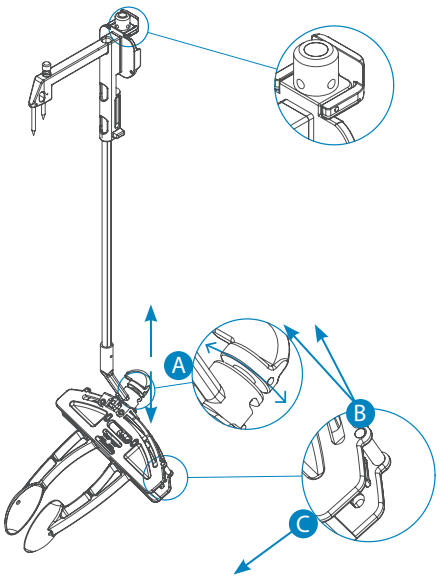	20-8011-013-00	1	Autoclave Additional specific cleaning requirements: A B C D E	

Description	Product ID	Qty	Sterilization and Specific Cleaning Instructions	Additional Notes
Tibial Left Adjustment Mechanism Tibial Right Adjustment Mechanism (Left instrument displayed) 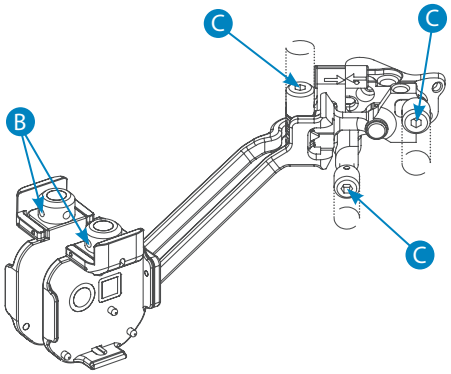 	20-8011-017-00 20-8011-018-00	1	Autoclave Additional specific cleaning requirements: B C D E	
Tibial Left Cut Guide Tibial Right Cut Guide (Left instrument displayed) 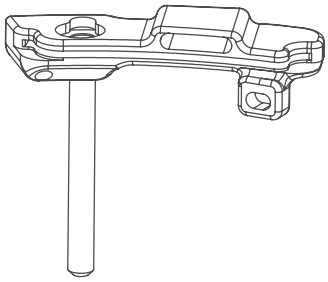	20-8011-019-00 20-8011-020-00	1	Autoclave	Cut guides are compatible with saw blades of 1.27 mm (0.05”) thickness
Validation Tool 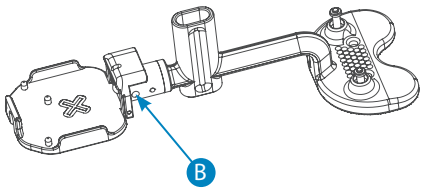 	20-8011-021-00	1	Autoclave Additional specific cleaning requirements: B D	
Alignment Arch 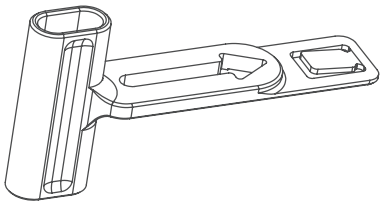	20-8011-022-00	1	Autoclave	

Description	Product ID	Qty	Sterilization and specific cleaning instructions	Additional Notes
Femoral Adjustment Mechanism 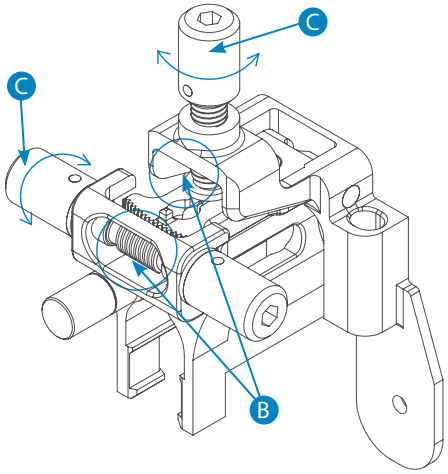 	20-8011-025-00	1	Autoclave Additional specific cleaning requirements: B C D E	
Femoral Reference 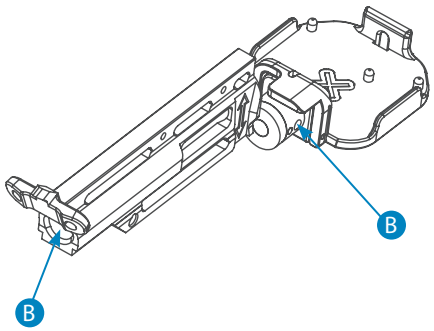 	20-8011-026-00	1	Autoclave Additional specific cleaning requirements: B D	
Femoral Distal Cut Guide HBMI Femoral Distal Cut Guide 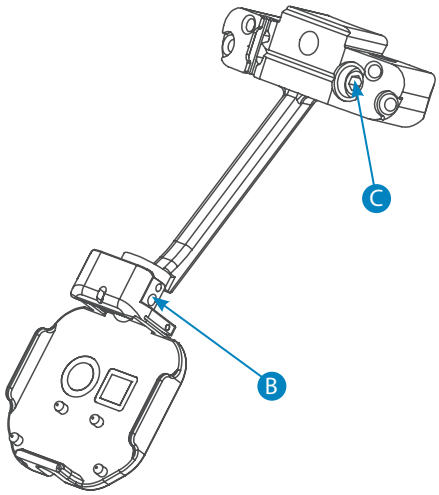 	20-8011-027-00 20-8011-027-50	1	Autoclave Additional specific cleaning requirements: B C D E	

Description	Product ID	Qty	Sterilization and specific cleaning instructions	Additional Notes
Pod Calibration Jig 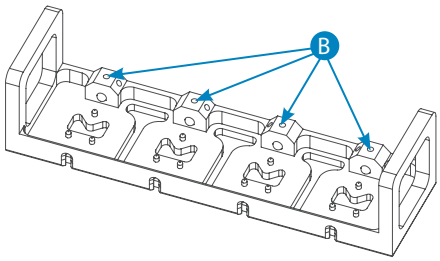 	20-8011-048-00	1	Autoclave Additional specific cleaning requirements: B D	
Femoral A/P Slider HBMI Femoral A/P Slider 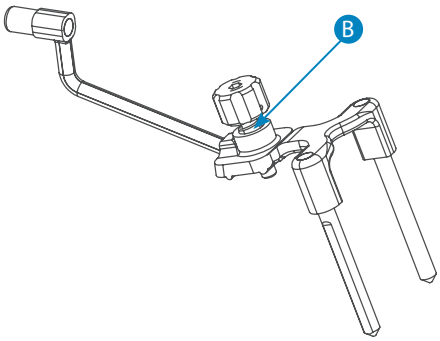 	20-8011-028-00 20-8011-028-50	1	Autoclave Additional specific cleaning requirements: B	

Do not apply excessive force to the instruments as this may cause deformation or breakage.

Description	Product ID	Qty	Sterilization and specific cleaning instructions	Additional Notes
Tibial Left Positioner Tibial Right Positioner (Left instrument displayed)	20-8011-040-00 20-8011-041-00	1	Autoclave Additional specific cleaning requirements: B D E	

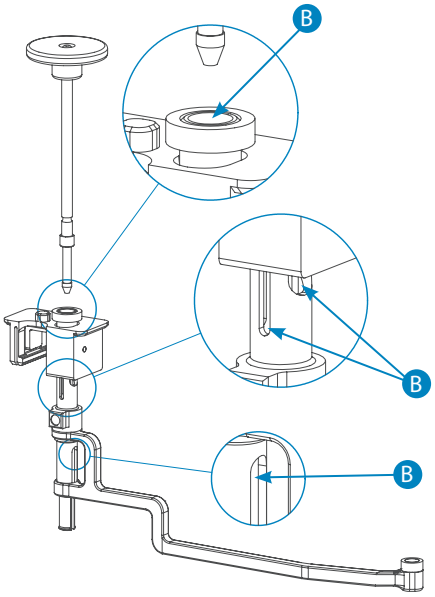

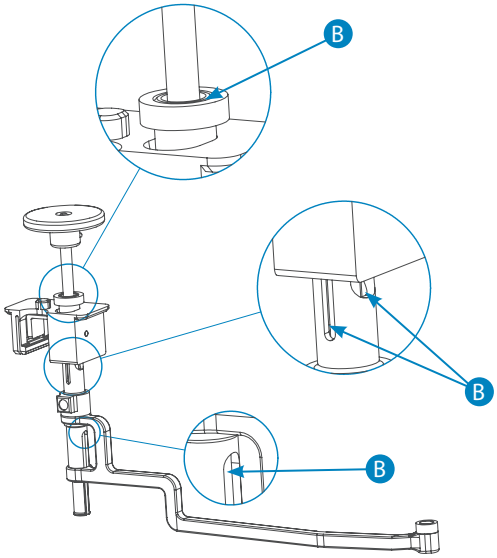

Description	Product ID	Qty	Sterilization and specific cleaning instructions	Additional Notes
Femoral Saw Slot 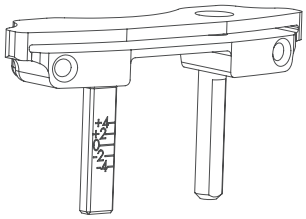	20-8011-042-00	1	Autoclave	Saw slot is compatible with saw blades of 1.27 mm (0.05”) thickness
Tibial Aligner - Upper Assembly 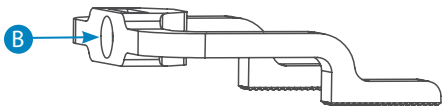	20-8011-056-51	1	Autoclave Additional specific cleaning requirements: B D	
Tibial Aligner - Lower Assembly 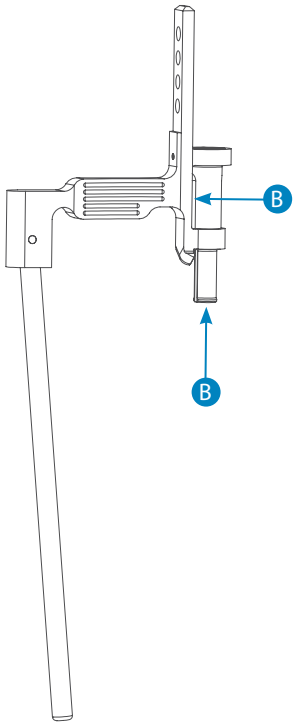	20-8011-056-52	1	Autoclave Additional specific cleaning requirements: B D	

5.3 Disposables

Instrument	Product ID	Qty	Sterilization and specific cleaning instructions	Additional Notes
iASSIST Knee V2 Pod Kit	20-8011-501-00	1	Not Applicable (provided sterile (ETO), do not re-sterilize)	Single use Provided sterile
3.5 x 38mm Hex Head Screw	20-8000-000-18	4	Autoclave for first use	Single use Provided non-sterile
3.2 mm Headless Trocar Drill Pin x 1[a]	20-8000-000-16	4	Autoclave for first use	Single use Provided non-sterile
Headless trocar drill pin, 75 mm[a] Note: This pin is manufactured by Zimmer (not Zimmer CAS). It should be ordered directly from Zimmer.	00-5901-020-00	4	See package insert for re-sterilization instructions if permissible	Single use Provided sterile
iASSIST Pin and Screw Pack	20-8000-000-20	1	Not applicable (provided sterile (irradiation), do not re-sterilize)	Single use Provided sterile

[a] These pins are equivalent in material and dimensions.

Do not use pins or any other fasteners than those recommended above.If a bilateral surgery is performed, ensure to user different pins ans screws for each side.

5.4 iASSIST V2 Tablet Kit

Before cleaning the iASSIST V2 Tablet kit, always unplug and power off the Tablet from the AC power outlet to prevent electrical shocks.

Clean the tablet screen only with a soft cloth dampened with 60% or more isopropyl alcohol or 60% or more ethyl alcohol. Wipe the screen and exterior with a soft, damp cloth moistened only with water. Do not use liquid or aerosol cleaners on the screen, as these will discolor the finish and damage the screen.

⚠ Warning: Disinfecting computer equipment with sprays is not recommended since the vapor can enter the equipment which may cause electrical short-circuits or corrosion. Never allow water or other liquids to enter the tablet since this may cause subsequent short-circuits or corrosion.

Hardware	Product ID	Qty	Cleaning Instructions
iASSIST V2 Tablet	20-8011-070-19	1	See above
iASSIST V2 Tablet Power Supply	20-8011-070-20	1	See above
iASSIST V2 Tablet Shipping Case	20-8011-070-21	1	See above
iASSIST V2 Tablet Holder	20-8011-070-23	1	See above

5.5 General Equipment Information

⚠ Warning: If one of the following situations arises, have the equipment verified by Zimmer CAS customer support personnel:

a. The equipment is not functioning properly;

b. The iASSIST V2 Tablet or the instruments have obvious/visible signs of breakage or fatigue;

c. The iASSIST V2 Tablet or the instruments have been dropped and are damaged;

d. Liquid has entered the Tablet;

e. The power cord or plug is damaged; or

f. If the date and time function of the Tablet stops functioning properly.

If an instrument marked with the below symbol is dropped, have the instrument verified by Zimmer CAS customer support personnel.

⚠ Note: When these instruments are dropped, their precision may be impaired. The mechanical deformity may be difficult to detect visually.

5.5.1 iASSIST V2 Tablet Kit

The iASSIST V2 Tablet has an internal battery that allows a minimum of 30 minutes of autonomy. This power backup is provided to prevent data loss if there is a main power outage.

If the Tablet needs to be shipped with a carrier, place it in the provided iASSIST V2 Tablet Shipping Case. The iASSIST V2 Tablet Shipping Case is specifically designed to withstand carrier shipping conditions.

The expected life of the tablet under normal usage conditions is three years.

⚠ Warning: Never open the casing of the iASSIST Tablet. The tablet does not contain replaceable parts. For safety reasons, only Zimmer CAS customer support personnel should open the equipment.

Protect the iASSIST Tablet from overheating. The openings on the enclosure are for ventilation purpose. Do not block the openings.

5.5.1 iASSIT Tablet Kit (cont.)

Never insert foreign objects in the iASSIST Tablet openings. This may cause electric shock or fire, or it may damage hardware components.

Make sure the computer is properly shutdown before closing the iASSIST V2 Tablet Shipping Case. If not, the system may overheat and be damaged.

The iASSIST Tablet must never be submerged in water or exposed to high level of humidity.

Do not leave the iASSIST Tablet in an uncontrolled environment where the storage temperature is below -10°C (14°F) or above 49°C (120°F), 90% relative humidity, non-condensing. This may damage the equipment.

Make sure that no objects, including wires, are left on the iASSIST Tablet screen when closing the iASSIST V2 Tablet Shipping Case. Any objects on the computer screen may damage it during transportation or storage.

The iASSIST Tablet should not be used adjacent to or stacked with other equipment. If adjacent or stacked use is necessary, the tablet should be observed to verify normal operation in the configuration in which it will be used.

For safety reasons, the iASSIST Tablet must be send to repair if the battery capacity is significantly reduced.

Because of risks related to lithium battery explosion, the iASSIST Tablet should not be exposed to extreme heat.

Do not use or store the iASSIST Tablet near a source of heat or dust.

Do not use another power supply, or cables other than the ones provided as this may negatively affect EMC performances.

Make sure that the power cord provided with the tablet is compatible with your local power requirements.

Do not step on or place anything on the power cord.

To avoid any damages to the power cables, make sure they are not bent at sharp angles.

Never force a cable connection..

Touchscreen Calibration

No calibration is necessary for the iAssist Tablet V2 touch screen.

5.5.2 iASSIST Knee Pod Kit

The Pods should be stored at normal ambient temperature (15°C to 30°C, 59°F to 86°F) and shipped within temperatures from –18°C (-0.4°F) up to +49°C (120°F), 80% relative humidity, non-condensing.

The Pods are packaged in a custom plastic tray ⚠ eventing activation prior to use.

Warning: Because of risks related to alkaline battery leaking, the pods should not be exposed to extreme heat such as an autoclave.

Care must be taken not to expose the pods to strong impacts. Strong magnetic fields should not approach the pods. This may erroneously trigger switches affecting the surgical flow (accuracy of sensors is not affected).

Functionality and accuracy of the pods may be affected if exposed to X-ray radiation.

Be careful to not expose the pods to water during the procedure. The pods can be wiped with a cloth damped with sterile NaCL 0,9%. Any excess water should be wiped off since it could affect wireless communication.

Colorblind users may rely on the numbers displayed next to navigation numbers. Also, the system controller computer screen displays more details.

Work Around

In some rare condition, it is known that the pods may lose network connection and may not be able to reconnect to the system controller computer. In this case, the user can re-scan the barcode, which will reinitialize the RF session allowing lost pods to reconnect the computer.

Tablet Disposal

The iASSIST V2 Tablet contains a battery that requires safe handling when disposal of the Tablet is necessary. It may leak or explode if exposed to heat or disposed of improperly. Dispose of the Tablet in accordance with applicable federal, state and local regulations as applicable in the United States of America, or equivalently as may be applicable in other countries.

Within the European Union, disposal of small amounts of portable batteries to landfills and incinerations are allowed under the Batteries Directive 2013/66/EC and Member State regulations. The iASSIST V2 Tablet battery must be removed (see Figure 5.1) before disposal.

As per directive 2012/19/EU on WEEE, the rest of the Tablet (without the battery) must be disposed of following regulations.

To find the appropriate treatment facility, please visit: http://www.weee.zimmer.eu

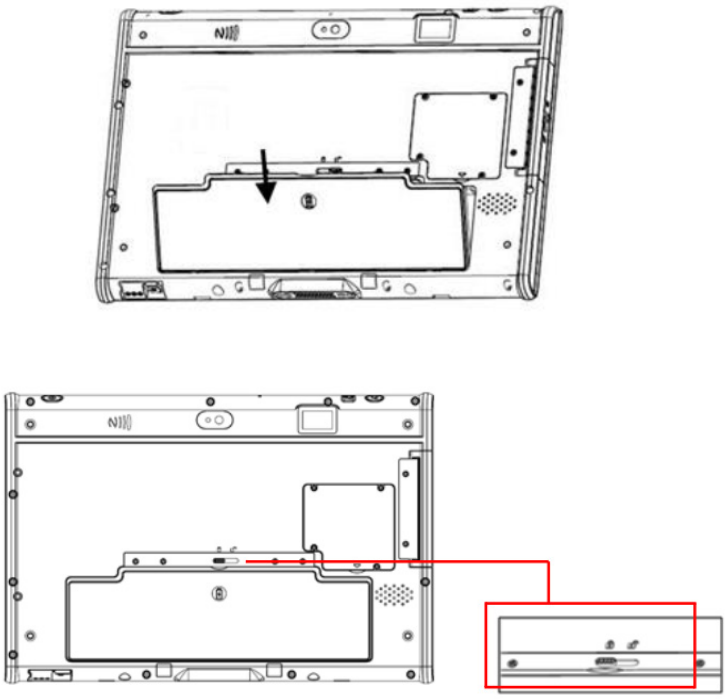

Figure 5.1
iASSIST V2 Tablet Battery Removal

LED Information

As illustrated in figure 5.2, the Pods each have an emplacement for the status/error LED and navigation LEDS. The status and error LEDs are at the same location and are distinguished by their color and general meaning (green for the status LED indicating normal functioning of the Pods and the system in general and red for the error LED indicating that an action is required from the user in order to proceed with the surgery).

The navigation LEDs display indication on the resection angles during navigation and on the manipulations needed from the user in the actual step.

Specific information on the LEDs' behavior is detailed in the following table (next page).

Pods User Interface

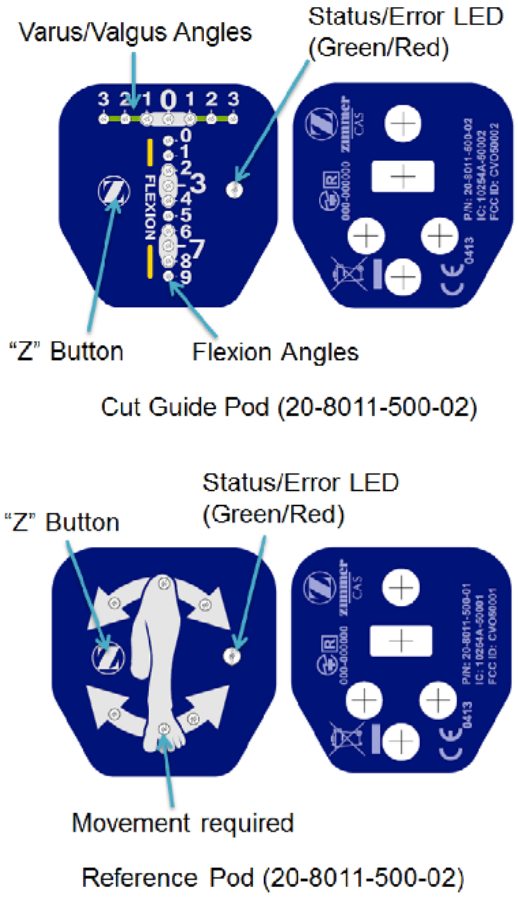

Figure 5.2
Pods User Interface

Status/Error LED	Navigation LEDs	Status	Required Action
Pod Power-Up			
Blinks rapidly (green)	N/A	The pods are trying to join the system network for procedure	Wait for the blinking to slow down, indicating that the network is up
Blinks slowly (green)	N/A	The network is up and ready for the procedure	Proceed with surgery
Solid Red	N/A	Pod has failed self-test	Open new pod kit
Calibration			
Blinking green	N/A	The pod needs to be clipped to the calibration jig for intraoperative calibration or intraoperative calibration is over and the pods can be unclipped from the calibration jig to proceed with surgery	Follow instructions onscreen to clip or unclip pods from the calibration jig
Solid green	N/A	The pods are adequately clipped to the calibration and ready for the calibration process	Proceed with surgery
N/A	Solid green	Indicates the expected calibration jig position for the intraoperative calibration	Position the calibration jig so that the face marked with that number is directed upward and wait for the acquisition to be completed
Registration and Validation			
N/A	Blinking green	Manipulations are needed to complete the registration / validation acquisitions	Use the pattern of the LEDs or the indications onscreen to perform necessary manipulation
N/A	Steady green	The leg is in the required orientation for the next acquisition	Stabilize the leg in the actual position until the registration sound is heard and another movement is needed
Blinking green	N/A	Successful computation after a sequence of acquisitions	No action needed. Continue with next step of surgery.
Cut Guidance			
N/A	Solid red	Resection angle is out of the pod's range.	Use the gold (F/E -Slope) and green (V/V) screws to adjust the resection angles.
N/A	Solid red	Resection angle is not aligned (+/- 2 degrees) with target	Use the gold (F/E -Slope) and green (V/V) screws to adjust the resection angles.
N/A	Solid green	Resection angle is aligned (+/- 1 degree) with target	Proceed with surgery
Anytime during procedure			
Solid red	N/A	Pod's battery level is low	If the Pod battery icon displays two bars instead of three, end of battery life within the next 30 minutes.
	N/A	System or pod error	Follow indications on the iASSIST V2 Tablet display in order to resolve the error.
	N/A	End of battery life	Consider opening a new iASSIST Knee Pod Kit or switching to conventional instrumentation.
Blinking green	N/A	Everything is working as it should	Proceed with surgery

Pod Battery Disposal

The pods contain batteries that require safe handling. They may leak if exposed to heat or disposed of improperly. Dispose of the batteries in accordance with applicable federal, state and local regulations as applicable in the United States of America, or equivalently as may be applicable in other countries.

Within the European Union, disposal of small amounts of portable batteries to landfills and incinerations are allowed under the Batteries Directive 2006/66/EC and Member State regulations.

Alternate instructions for safe battery removal to waste disposal is also possible but requires special decontamination steps as follow:

For safe battery removal at the end-of-life by a waste treatment facility, infected units should be decontaminated as per hospital procedure. However, alkaline battery risks (e.g. do not expose to autoclave because of risk of explosion) should be considered before they are sent for recycling. Instructions for decontamination are provided below. If it is not possible to decontaminate the pods before recycling, the hospital should not attempt to remove the batteries from the waste. Disposal of small amounts of portable batteries to landfills and incinerations are allowed under the Batteries Directive 2006/66/EC and Member State regulations.

Prior to sending electronic waste for recycling, the pods are required to go through a complete cleaning, disinfection and sterilization cycle. Before starting the cycle, make sure the pod battery is draned: pods no longer blink. The following steps are recommended:

1. The pod's outer surfaces are wiped down first.
2. Expose the pod to an Ethylene Oxide (ETO) sterilization cycle per the following parameters:
   a. Preconditioning set points:
      - Temperature: 100-125˚F (38-52˚C)
      - Relative humidity: 35-80%
      - Vacuum set point: 2.61 pounds per square inch
      - Preconditioning time: under 60 minutes
   b. Exposure:
      - Temperature: 105-145˚F (41-63˚C)
      - Relative humidity: 30-90%
      - EO gas concentration: 725 mg/L
      - 100% EO gas
      - Gas exposure time: 60 minutes
      - pressure: 3.8 - 4.8 HgA
   c. Aeration:
      - Aeration time: 8 hours
      - Aeration temperature: 51-59˚C
4. To find the appropriate pod treatment facility, please visit: http://www.weee.zimmer.eu

To remove the battery from the Pods, the following steps are recommended:

1. Remove the back sticker from the Pod by inserting any tool with a sharp end between the sticker and the bottom of the Pod.

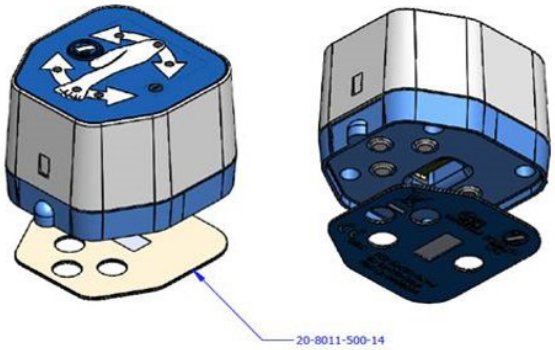

2. Use a torx screwdriver to remove the 4 screws on the bottom of the Pod
3. Remove the base casing.

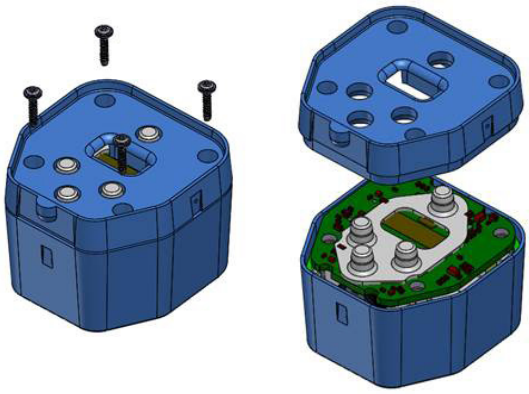

Figure 5.2
Pod Battery Disposal

4. Remove the grey rubber keybpad.

5. Remove the circuit board.

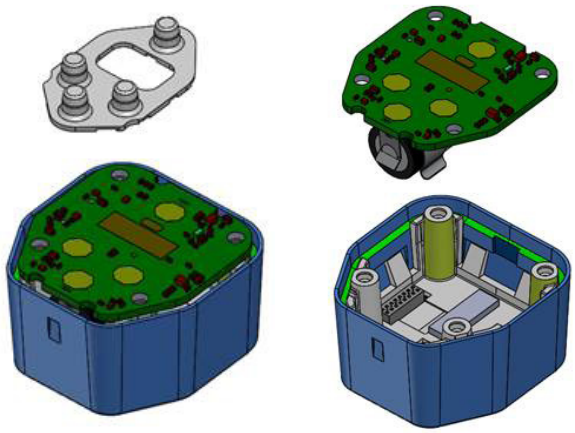

6. Remove the foam and the battery

5.6 Product Specifications and Regulatory Notices

5.6.1 Essential Performances for the System

The System is composed of the iASSIST V2 kit and the iAssist Knee Pod Kit. The iAssist Pod contains inertial sensors (accelerometers and gydroscopes) and instrument identification switches. The following performances have been identified as essential to the system:

1. iASSIST V2 Tablet display.

2. Communication between the iASSIST V2 Tablet and the Pods contains accurate data. Complete loss of communication is not considered an essential performance.

3. The accelerometer inclination measurements of the Pods on all axes are stable within ±1.0°.

4. The gyroscope rotation speed measurements of the Pods on all axes are stable within ±1.0°/sec.

5. Pod identification swtiches report accurate instrument connection.

6. Pod temperature changes are detected at ±1.0°C.

The essential performances 1, 3, 4,5 and 6 have been tested during electromagnetic immunity tests up to the levels shown in the tables in this section. Loss or degradation of essential performance can result in navigation errors and/or instruments misidentification.

5.6.2 iASSIST V2 Tablet Kit

Specifications

- Weight: About 1.42 kg
- Dimensions: 335 mm x 220 mm x 43 mm (irregular)
- Power: 100-240 VAC, 47-63 Hz, 1.62-0.72 A
- Operating conditions: 15°C (59°F) to 30°C (86°F), 20% to 90% relative humidity, 70 kPa to 106 kPa
- Transport conditions: -10°C (14°F) to 49°C (120°F) at 10 to 90% non-condensing relative humidity
- Storage conditions: -10°C (14°F) to 49°C (120°F) at 10 to 90% non-condensing relative humidity
- User devices: Touch screen, 2D barcode scanner

⚠ Warning: The iASSIST V2 Tablet has been tested and is in compliance with the EMC (Electro-Magnetic Compatibility) requirements for emissions. In some situations it is still possible that radiated electromagnetic fields such as those from portable and mobile devices may cause performance degradation. Portable and mobile RF communications equipment can affect the iASSIST Knee System. Turning off 2.4GHz band Radio Frequency (RF) devices around the system (such as Bluetooth, Wi-Fi) can improve communication performance between the Pods and the iASSIST Tablet.

Wireless Communications

The iASSIST V2 Tablet (20-8011-070-19) contains IEEE 802.15.4 RF transmitter with the following characteristics:
- Transmission frequency: 2.405 GHz to 2.48 GHz
- Modulation: Offset Quadrature Phase-Shift Keying (OQPSK)
- Coding: Direct Sequence Spread Spectrum (DSSS)
- Transmission bandwidth: 2 MHz
- Effective isotropic radiated power: 4 dBm

The iASSIST V2 Tablet contains IEEE 802.11 RF transmitter with the following characteristics:

• Transmission frequency: 2.4 and 5 GHz

• Network Standard: Compliant with IEEE 802.11a/b/g/n/ac

• Modulation: OFDM with BPSK, QPSK, 16 QAM, 64 QAM;DQPSK, CCK, G-FSK, π/4-DQPSK, 8-DPSK

• Effective isotropic radiated power: 19.06 dBm

• Transmission bandwidth: Depends on network standard

⚠ Warning: If the iASSIST V2 Tablet is not used for a long time, ensure the Tablet is recharged periodically.

⚠ Warning: Operation in the band 5150–5250 MHz is only allowed for indoor use to reduce the potential for harmful interference to co-channel mobile satellite systems

⚠ Avertissement: Operation dans la bande 5150-5250 MHz est autorisée uniquement pour un usage intérieur afin de réduire les risques d'interférence nuisible aux systèmes mobiles par satellite co-canal

FCC Notice

This equipment has been tested and found to comply with the limits for a Class A digital device, pursuant to part 15 of the FCC Rules. These limits are designed to provide reasonable protection against harmful interference when the equipment is operated in a commercial environment. This equipment generates, uses, and can radiate radio frequency energy and, if not installed and used in accordance with the instruction manual, may cause harmful interference to radio communications. Operation of this equipment in a residential area is likely to cause harmful interference in which case the user will be required to correct the interference at his own expense. However, there is no guarantee that interference will not occur in a particular installation.

If this equipment does cause harmful interference to radio or television reception, which can be determined by turning the equipment off and on, the user is encouraged to try to correct the interference by one or more of the following measures:
- Reorient or relocate the receiving antenna;
- Increase the separation between the equipment and receiver;
- Connect the equipment into an outlet on a circuit different from that to which the receiver is connected; and
- Consult the dealer or an experienced radio/TV technician for help.

This device complies with part 15 of the FCC Rules. Operation is subject to the following two conditions: (1) This device may not cause harmful interference, and (2) this device must accept any interference received, including interference that may cause undesired operation.

Caution: Changes or modifications not expressly approved by the party responsible for compliance could void the user's authority to operate this equipment.

IC Notice

This device complies with Industry Canada licence-exempt RSS standard(s). Operation is subject to the following two conditions: (1) this device may not cause interference, and (2) this device must accept any interference, including interference that may cause undesired operation of the device.

Cet appareil est conforme avec Industrie Canada exempts de licence standard RSS (s). Son fonctionnement est soumis aux deux conditions suivantes: (1) cet appareil ne doit pas provoquer d'interférences et (2) cet appareil doit accepter toute interférence, y compris celles pouvant causer un mauvais fonctionnement de l'appareil.

Health Canada RF Exposure Warning Statement

This device complies with Health Canada's Safety Code. The installer of this device should ensure that RF radiation is not emitted in excess of the Health Canada's requirement. Information can be obtained at http://www.hc-sc.gc.ca/ewh-semt/pubs/radiation/radio_guide-lignes_direct/index-eng.php

Cet appareil est conforme avec Santé Canada Code de sécurité 6. Le programme d 'installation de cet appareil doit s' assurer que les rayonnements RF n'est pas émis au-delà de l'exigence de Santé Canada. Les informations peuvent être obtenues: http://www.hc-sc.gc.ca/ewh-semt/pubs/radiation/radio_guide-lignes_direct/index-fra.php

Guidance and Manufacturer's Declaration

In order for the Tablet to attain its expected service life of three years, it must not be subjected to levels of electromagnetic disturbance higher than those specified in Tables 5.3, 5.4, 5.5 and 5.6. Failure to respect those levels may lead to a degradation of the system's basic safety and essential performances.

Table 5.3: Guidance and Manufacturer's Declaration - ELECTROMAGNETIC EMISSIONS

The iASSIST V2 Tablet is intended for use in the electromagnetic environment specified below. The customer or the user of the iASSIST Tablet should assure that it is used in such an environment.		
Emissions test	Compliance	Electromagnetic environment – guidance
RF emissions CISPR 11	Group 1	The iASSIST Tablet uses RF energy only for its internal function. Therefore, its RF emissions are very low and are not likely to cause any interference in nearby electronic equipment.
RF emissions CISPR 11	Class A	The emissions characteristics of this equipment make it suitable for use in industrial areas and hospitals (CISPR 11 class A). If it is used in a residential environment (for which CISPR 11 class B is normally required) this equipment might not offer adequate protection to radio-frequency communication services. The user might need to take mitigation measures, such as relocating or re-orienting the equipment. Caution: This equipment is not intended for use in residential environments and may not provide adequate protection to radio reception in such environments.
Harmonic emissions IEC 61000-3-2	Class D	
Voltage fluctuations/ flicker emissions IEC 61000-3-3	Complies	

Table 5.4: Guidance and Manufacturer's Declaration - ELECTROMAGNETIC IMMUNITY

The iASSIST V2 Tablet is intended for use in the electromagnetic environment specified below. The customer or the user of the iASSIST Tablet should assure that it is used in such an environment.			
IMMUNITY test	IEC 60601-1-2 test level	Compliance level	Electromagnetic environment – guidance
Electrostatic discharge (ESD) IEC 61000-4-2	± 8 kV contact ± 2 kV, ± 4 kV, ± 8 kV, ± 15 kV air	± 8 kV contact ± 2 kV, ± 4 kV, ± 8 kV, ± 15 kV air	Floors should be wood, concrete or ceramic tile. If floors are covered with synthetic material, the relative humidity should be at least 30 %.

Electrical fast transient/burst-IEC 61000-4-4	± 2 kV for input power port (a.c. and d.c) 100 kHz repetition frequency ± 1 kV for signal input/output parts 100 kHz repetition frequency	± 2 kV for input power port (a.c. and d.c) 100 kHz repetition frequency ± 1 kV for signal input/output parts 100 kHz repetition frequency	Mains power quality should be that of a typical commercial or hospital environment.
Surge IEC 61000-4-5	± 0.5 kV, ± 1 kV line-to line for input power port (a.c. and d.c.) ± 0.5 kV , ± 1 kV , ± 2 kV line-to-ground for input power port (a.c. and d.c.) ± 2 kV line-to-ground for signal input/output parts	± 0.5 kV, ± 1 kV line-to line for input power port (a.c. and d.c.) ± 0.5 kV , ± 1 kV , ± 2 kV line-to-ground for input power port (a.c. and d.c.) ± 2 kV line-to-ground for signal input/output parts	Mains power quality should be that of a typical commercial or hospital environment.

Table 5.5: Guidance and Manufacturer's Declaration - ELECTROMAGNETIC IMMUNITY

The iASSIST V2 Tablet is intended for use in the electromagnetic environment specified below. The customer or the user of the iASSIST Tablet should assure that it is used in such an environment			
IMMUNITY test	IEC 60601-1-2 test Level	Compliance level	
Conducted RF IEC 61000-4-6	3 Vrms 0.15 MHz - 80 MHz 6 VRMS in ISM bands between 0.15 mHz and 80 Mhz 80% AM at 1 kH	3 Vrms 0.15 MHz - 80 MHz 6 VRMS in ISM bands between 0.15 mHz and 80 Mhz 80% AM at 1 kH	
Radiated RF IEC 61000-4-3	3 V/m 80 MHz - 2,7 GHz 80% AM at 1 kHz	3 V/m 80 MHz - 2,7 GHz 80% AM at 1 kHz	
Proximity fields from RF wireless communications equipment IEC 61000-4-3	See Table 5.6	See Table 5.6	
Warning: Portable RF communications equipment (including peripherals such as antenna cables and external antennas) should be user no closer than 30 cm (12 inches) to any part of the iASSIST Tablet, including cables specified by the manufacturer. Otherwise, degradation of the performance of this equipment could result.			

Table 5.6: Guidance and Manufacturer's Declaration – Electromagnetic Immunity

The iASSIST V2 Tablet is intended for use in the electromagnetic environment specified below. The customer or the user of the iASSIST V2 Tablet should assure that it is used in such an environment.				
Immunity test	Test Frequency	Modulation	IEC 60601-1-2 test level	Compliance level
Proximity field from RF wireless communication equipment IEC 61000-4-3	385 MHz	Pulse Modulation : 18 Hz	27 V/m	27 V/m
	450 MHz	☐ FM ± 5 Hz deviation: 1kHz sine ☒ Pulse Modulation : 18Hz	28 V/m	28 V/m
	710 MHz 745 MHz 780 MHz	Pulse Modulation : 217Hz	9 V/m	9 V/m
	810 MHz 870 MHz 930 MHz	Pulse Modulation : 18 Hz	28 V/m	28 V/m
	1720 MHz 1845 MHz 1970 MHz	Pulse Modulation : 217 Hz	28 V/m	28 V/m
	2450 MHz	Pulse Modulation : 217 Hz	28 V/m	28 V/m
	5240 MHz 5500 MHz 5785 MHz	Pulse Modulation : 217 Hz	9 V/m	9 V/m

5.6.3 iASSIST Knee Pod Kit

Specifications

- Weight: 38 g
- Size: 42 mm x 40 mm x 30 mm
- Operating conditions:15°C to 30°C, 20% to 90% relative humidity, 70 kPa to 106 kPa
- Storage conditions: 15°C to 30°C
- Transport conditions: -18°C to +49°C, 80% relative humidity, non-condensing
- Battery duration: Approximately 2 hours
- Other: Single use, disposable.

The pods are rated IP21 according to the IEC 60529 standard for degree of protection provided by enclosure. External surfaces of the pods have been tested as applied parts type BF per IEC 60601- 1 ed 3.1.

Wireless Communications

The Pods contain IEEE 802.15.4 RF transmitters with the following characteristics:

- Transmission frequency: 2.405 GHz to 2.48 GHz
- Modulation: Offset Quadrature Phase-Shift Keying (OQPSK)
- Coding: Direct Sequence Spread Spectrum (DSSS)
- Transmission bandwidth: 2 MHz
- Effective isotropic radiated power: 0 dBm

⚠ Warning: The Pods have been tested and are in compliance with the EMC (Electro-Magnetic Compatibility) requirements for emissions. In some situations it is still possible that radiated electromagnetic fields such as those from portable and mobile devices may cause performance degradation. Portable and mobile RF communications equipment can affect the iASSIST Knee System. Turning off 2.4GHz band Radio Frequency (RF) devices around the system (such as Bluetooth, Wi-Fi) can improve communication performance between the Pods and the iASSIST Tablet.

FCC Notice

This equipment has been tested and found to comply with the limits for a Class A digital device, pursuant to part 15 of the FCC Rules. These limits are designed to provide reasonable protection against harmful interference when the equipment is operated in a commercial environment. This equipment generates, uses, and can radiate radio frequency energy and, if not installed and used in accordance with the instruction manual, may cause harmful interference to radio communications. Operation of this equipment in a residential area is likely to cause harmful interference in which case the user will be required to correct the interference at his own expense. However, there is no guarantee that interference will not occur in a particular installation.

If this equipment does cause harmful interference to radio or television reception, which can be determined by turning the equipment off and on, the user is encouraged to try to correct the interference by one or more of the following measures:

- Reorient or relocate the receiving antenna;
- Increase the separation between the equipment and receiver;
- Connect the equipment into an outlet on a circuit different from that to which the receiver is connected; and
- Consult the dealer or an experienced radio/TV technician for help.

This device complies with part 15 of the FCC Rules. Operation is subject to the following two conditions: (1) This device may not cause harmful interference, and (2) this device must accept any interference received, including interference that may cause undesired operation.

Caution: Changes or modifications not expressly approved by the party responsible for compliance could void the user's authority to operate this equipment.

IC Notice

This device complies with Industry Canada licence-exempt RSS standard(s). Operation is subject to the following two conditions: (1) this device may not cause interference, and (2) this device must accept any interference, including interference that may cause undesired operation of the device.

Cet appareil est conforme avec Industrie Canada exempts de licence standard RSS (s). Son fonctionnement est soumis aux deux conditions suivantes: (1) cet appareil ne doit pas provoquer d'interférences et (2) cet appareil doit accepter toute interférence, y compris celles pouvant causer un mauvais fonctionnement de l'appareil.

Health Canada RF Exposure Warning Statement

This device complies with Health Canada's Safety Code. The installer of this device should ensure that RF radiation is not emitted in excess of the Health Canada's requirement. Information can be obtained at http://www.hc-sc.gc.ca/ewh-semt/pubs/radiation/radio_guide-lignes_direct/index-eng.php

Cet appareil est conforme avec Santé Canada Code de sécurité 6. Le programme d 'installation de cet appareil doit s' assurer que les rayonnements RF n'est pas émis au-delà de l'exigence de Santé Canada. Les informations peuvent être obtenues: http://

www.hc-sc.gc.ca/ewh-semt/pubs/radiation/radio_guide-lignes_direct/index-fra.php

Guidance and Manufacturer's Declarations

In order for the Pod to attain its expected service life of three years, it must not be subjected to levels of electromagnetic disturbance higher than those specified in Tables 5.7, 5.8, 5.9 and 5.10. Failure to respect those levels may lead to a degradation of the system's basic safety and essential performances.

Table 5.7: Guidance and Manufacturer's Declaration – Electromagnetic Emissions

The pods are intended for use in the electromagnetic environment specified below. The customer or the user of the pods should assure that it is used in such an environment.		
Emissions test	Compliance	Electromagnetic environment – guidance
RF emissions CISPR 11	Group 1	The pods use RF energy only for its internal function. Therefore, its RF emissions are very low and are not likely to cause any interference in nearby electronic equipment.
RF emissions CISPR 11	Class A	The EMISSIONS characteristics of this equipment make it suitable for use in industrial areas and hospitals (CISPR 11 class A). If it is used in a residential environment (for which CISPR 11 class B is normally required) this equipment might not offer adequate protection to radio-frequency communication services. The user might need to take mitigation measures, such as relocating or re-orienting the equipment. Caution: This equipment is not intended for use in residential environments and may not provide adequate protection to radio reception in such environments.
Harmonic emissions IEC 61000-3-2	Notapplicable	
Voltage fluctuations/ flicker emissions IEC 61000-3-3	Notapplicable	

Table 5.8: Guidance and Manufacturer's Declaration – Electromagnetic Immunity

The pods are intended for use in the electromagnetic environment specified below. The customer or the user of the pods should assure that it is used in such an environment.			
Immunity test	IEC 60601-1-2 test level	Compliance level	Electromagnetic environment – guidance
Electrostatic discharge (ESD) IEC 61000-4-2	± 8 kV contact ± 2 kV, ± 4 kV, ± 8 kV, ± 15 kV air	± 2 kV, ± 4 kV, ± 8 kV contact ± 2 kV, ± 4 kV, ± 8 kV, ± 15 kV air	Floors should be wood, concrete or ceramic tile. If floors are covered with synthetic material, the relative humidity should be at least 30 %.
Electrical fast transient/burst IEC 61000-4-4	± 2 kV for input power port (AC and DC) 100 kHz repetition frequency ± 1 kV for signal input/output parts 100 kHz repetition frequency	Not applicable	Not applicable
Surge IEC 61000-4-5	± 0,5 kV, ± 1 kV line-to-line for input power port (AC and DC) ± 0,5 kV, ± 1 kV, ± 2 kV line-to-ground for input power port (AC and DC) ± 2 kV line-to-ground for signal input/output parts	Not applicable	Not applicable
Voltage dips, short interruptions and voltage variations on power supply lines IEC 61000-4-11	0 % U_T; 0,5 cycle At 0°, 45°, 90°, 135°, 180°, 225°, 270° and 315° 0 % U_T; 1 cycle and 70 % U_T; 25/30 cycles Single phase: at 0°	Not applicable	Not applicable
Voltage interruptions on power supply lines IEC 61000-4-11	0 % U_T; 250/300 cycles	Not applicable	Not applicable
Power frequency (50/60 Hz) magnetic field IEC 61000-4-8	30 A/m 50 Hz and 60 Hz (because it is battery powered)	30 A/m 50 Hz and 60 Hz (because it is battery powered)	Power frequency magnetic fields should be at levels characteristic of a typical location in a typical commercial or hospital environment.

NOTE: U_T is the AC mains voltage prior to application of the test level.

Table 5.9: Guidance and Manufacturer's Declaration – Electromagnetic Immunity

The pods are intended for use in the electromagnetic environment specified below. The customer or the user of the pods should assure that it is used in such an environment.			
Immunity test	IEC 60601-1-2 test level	Compliance level	
Conducted RF IEC 61000-4-6	3 VRMS 0,15 MHz – 80 MHz 6 VRMS in ISM bands between 0,15 MHz and 80 MHz 80 % AM at 1 kHz	Not applicable	
Radiated RF IEC 61000-4-3	3 V/m 80 MHz – 2,7 GHz 80 % AM at 1 kHz	3 V/m 80 MHz – 6 GHz 80 % AM at 1 kHz	
Proximity fields from RF wireless communications equipment IEC 61000-4-3	See table 5.10	See table 5.10	

WARNING: Portable RF communications equipment (including peripherals such as antenna cables and external antennas) should be used no closer than 30 cm (12 inches) to any part of the iASSIST Pod, including cables specified by the manufacturer. Otherwise, degradation of the performance of this equipment could result."

Table 5.10: Guidance and Manufacturer's Declaration – Electromagnetic Immunity

The pods are intended for use in the electromagnetic environment specified below. The customer or the user of the pods should assure that it is used in such an environment.				
Immunity test	Test Frequency	Modulation	IEC 60601-1-2 test level	Compliance level
Proximity field from RF wireless communication equipment IEC 61000-4-3	385 MHz	Pulse Modulation : 18 Hz	27 V/m	27 V/m
	450 MHz	☐ FM ± 5 Hz deviation: 1kHz sine ☒ Pulse Modulation : 18Hz	28 V/m	28 V/m
	710 MHz 745 MHz 780 MHz	Pulse Modulation : 217Hz	9 V/m	9 V/m
	810 MHz 870 MHz 930 MHz	Pulse Modulation : 18 Hz	28 V/m	28 V/m
	1720 MHz 1845 MHz 1970 MHz	Pulse Modulation : 217 Hz	28 V/m	28 V/m
	2450 MHz	Pulse Modulation : 217 Hz	28 V/m	28 V/m
	5240 MHz 5500 MHz 5785 MHz	Pulse Modulation : 217 Hz	9 V/m	9 V/m

Symbols and Icons

	Symbol for "Disposal of WEEE (Waste Electrical and Electronic Equipment)" In the EU, refer to www.weee.zimmer.eu for information.		Symbol for "Do not resterilize"
	Symbol for "Caution, consult operating instructions for use"		Symbol for "To be used by… (Year, Month)"
IPN$_1$N$_2$	Symbol for "Protection against harmful ingress of water or particulate matter"		Symbol for "Intentional Emitter of Non-Ionizing Radiation"
	Symbol for "Manufacturer"		Symbol for "Japan Radio Mark"
	Symbol for "Temperature Range"		Symbol for "UL Classification Mark"
EC REP	Symbol for "Authorized EC Representative"		Symbol for "Nemko Safety Mark"
	Symbol for "Humidity Range"		Certifies that the electromagnetic interference from the device is under limits approved by the Federal Communications Commission
Rx only	Symbol for "Caution: Federal (U.S.) law restricts this device to sale by or on the order of a physician."		Symbol for "RCM compliance mark"
STERILE EO	Symbol for "Sterile" and "Sterilized using ethylene oxide gas"		Symbol for "Type BF Applied Part"
NOT STERILE	Symbol for "Contents packed without sterilization"		Symbol for "European Conformity"
	Symbol for "Not to be reused"		Symbol for "Should not be used if the package has been damaged or opened"
NON STERILE	Symbol for "Non-Sterile"		Symbol for "Caution": Indicates the need for the user to consult theinstructions for use for important cautionary information such as warnings and precautions that cannot, for a variety of reasons, be presented on the medical device itself.
MD	Symbol for "Medical Device"		Symbol for "Double Sterile Barrier System"

UDI	Symbol for "Unique Device Identifier"	LOT	Symbol for "Batch Code"
REF	Symbol for "Catalogue Number"		Symbol for "Importer"
Complies with IMDA Standards DB107208	Symbol for "Compliance with Singapour's IMDA-Standards"		Symbol for "Consult instructions for use"
ICASA TA XXXX-YYYY APPROVED	Symbol for "Independent Communications Authority of South Africa"		

All content herein is protected by copyright, trademarks and other intellectual property rights, as applicable, owned by or licensed to Zimmer Biomet or its affiliates unless otherwise indicated, and must not be redistributed, duplicated or disclosed, in whole or in part, without the express written consent of Zimmer Biomet.

This material is intended for health care professionals. Distribution to any other recipient is prohibited.

For product information, including indications, contraindications, warnings, precautions, potential adverse effects and patient counseling information, see the package insert and www.zimmerbiomet.com.

Zimmer Biomet does not practice medicine. This technique was developed in conjunction with [a] health care professional[s]. This document is intended for surgeons and is not intended for laypersons. Each surgeon should exercise his or her own independent judgment in the diagnosis and treatment of an individual patient, and this information does not purport to replace the comprehensive training surgeons have received. As with all surgical procedures, the technique used in each case will depend on the surgeon's medical judgment as the best treatment for each patient. Results will vary based on health, weight, activity and other variables. Not all patients are candidates for this product and/or procedure. Caution: Federal (USA) law restricts this device to sale by or on the order of a surgeon. Rx only.

Check for country product clearances and reference product specific instructions for use.

Accel™ is a trademark of Diversey, Inc.

©2020 Zimmer Biomet

ZIMMER BIOMET
Your progress. Our promise.®

2643.1-GLBL-en

Legal Manufacturer
Zimmer CAS
75, Queen Street, Suite 3300
Montreal (Quebec) H3C 2N6
CANADA
Tel: 1 (514) 395-8883
Fax: 1 (514) 878-3801

www.zimmerbiomet.com

CE 2862 CE

CE mark on a surgical technique is not valid unless there is a CE mark on the product label.