This information : shall be kept confidential until [NDA]
is controlled as confidential by [ALAP]
can be stored in [Access controlled storage]
can be transferred with [Encrypted channel]
Confidential

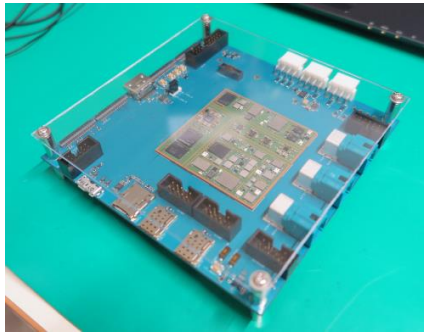

User’s Manual for UMNZ1A2

Sep. 2024

ALPSALPINE

UMNZ1A2 and EVB2 overview

ALPSALPINE
Confidential

UMNZ1A2 EVB2 (Evaluation board 2) has antenna connector, USB connector and SIM slots. The customer can check the operation of RF and software on this EVB2.

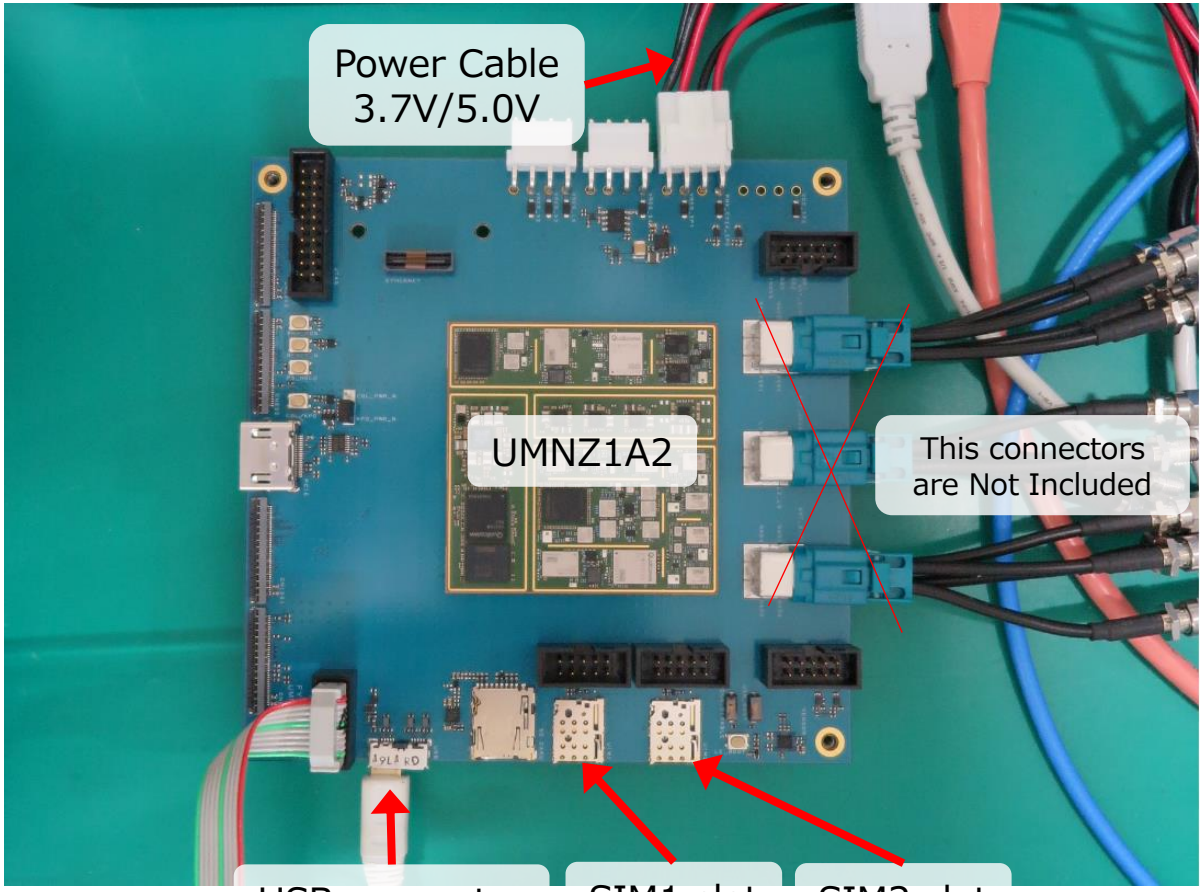

◆Included Items
- UMNZ1 module
- Power Cable(3.7V/5.0V)
- USB connector(USB2/3.0)
- SIM1/2 slot

Antenna connection

ALPSALPINE
Confidential

EVB2 is configured to use U.FL connector which placed on back side of board to reduce the cost of Antenna connectors. You can connect the coaxial cables for RF test.

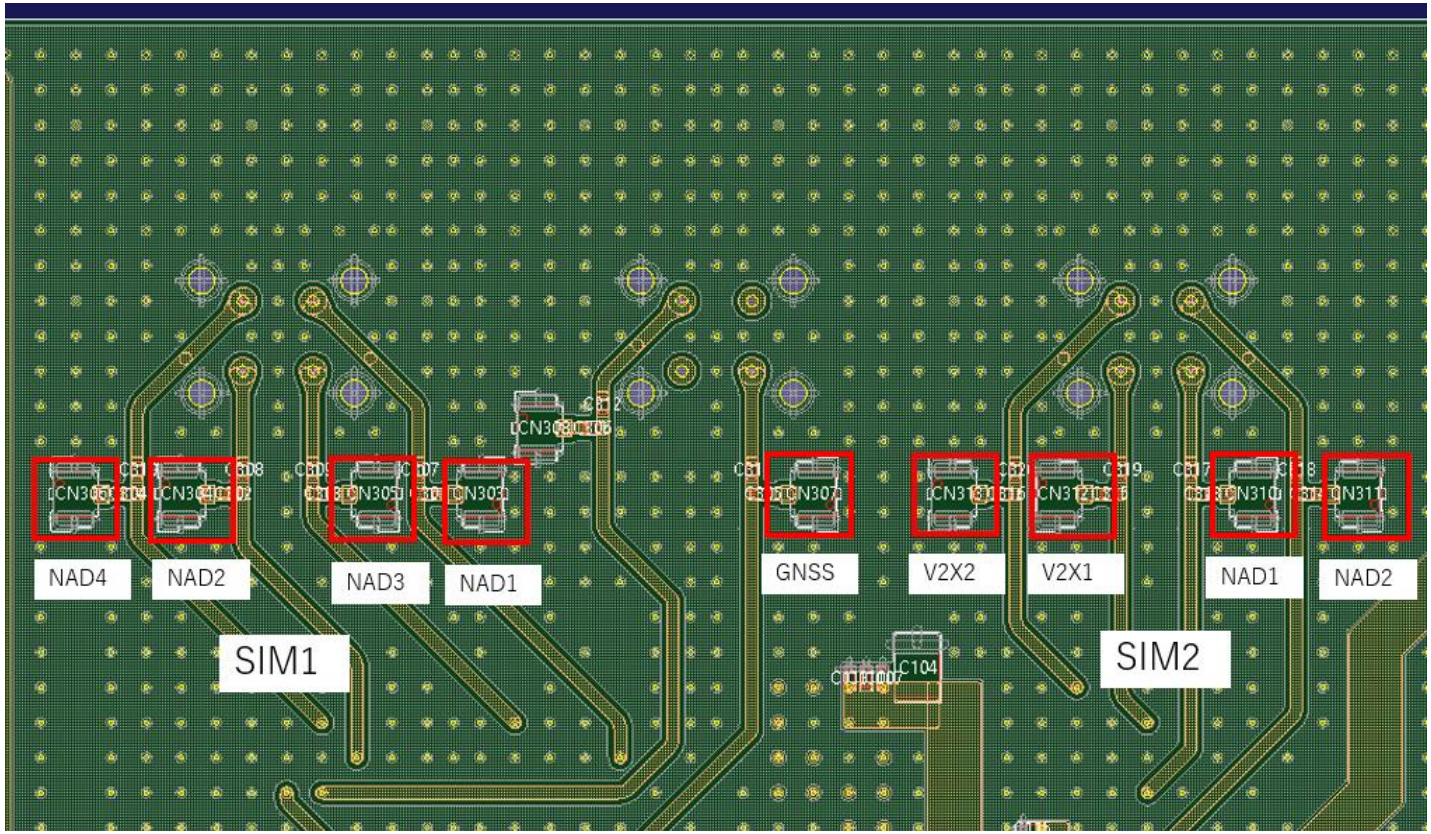

Antenna connection

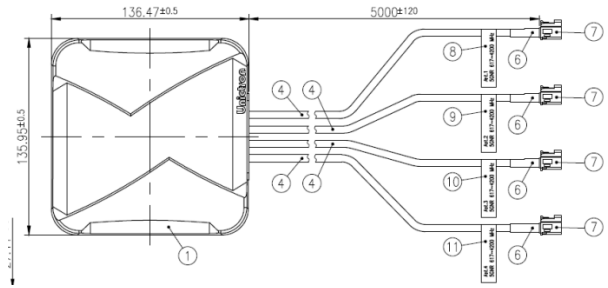

MT-25B-BS-4L02__For C3084(SIM1)

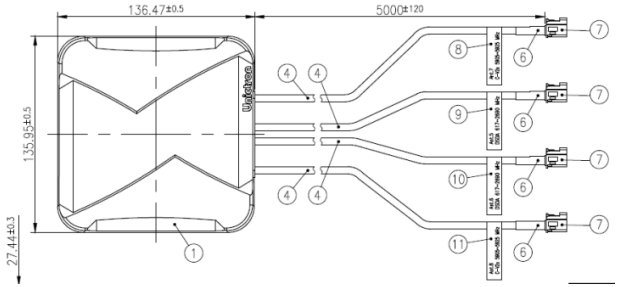

MT-25B-BS-4L01(SIM2)

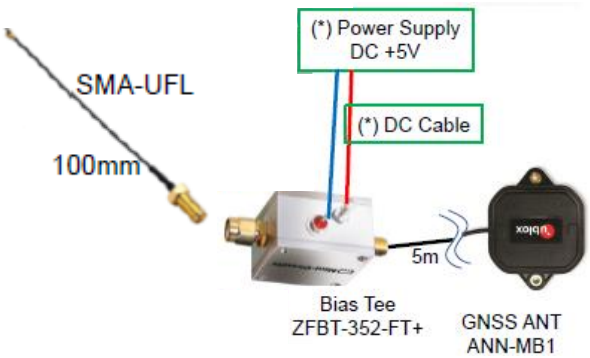

Antenna name	Description	ANT Cable#
SIM1_NAD1	Cellar ANT1 for SIM1	Ant.3
SIM1_NAD2	Cellar ANT2 for SIM1	Ant.2
SIM1_NAD3	Cellar ANT3 for SIM1	Ant.1
SIM1_NAD4	Cellar ANT4 for SIM1	Ant.4
SIM2_NAD1	Cellar ANT1 for SIM2	Ant.6
SIM2_NAD2	Cellar ANT2 for SIM2	Ant.5
SIM2_V2X1	C-V2X ANT1 for SIM2	Ant.7
SIM2_V2X2	C-V2X ANT2 for SIM2	Ant.8
GNSS	GNSS Antenna	SMA-UFL

*CV2X is disabled via software in the U.S

*You can also see these information with RF cable of the antenna.

Power on procedure

ALPSALPINE
Confidential

① Connect Power Cable(3.7V/5.0V) to Power supply.
② Connect RF cables to RF signal analyzer or signaling tester.
③ Enable Power supply(can output >3A) to VDD 5.0V.
④ Enable Power supply(can output >3A) to VDD 3.7V.
⑤ Connect USB cable to PC.

*UMNZ1A2 is automatically boot up after both powers are supplied.

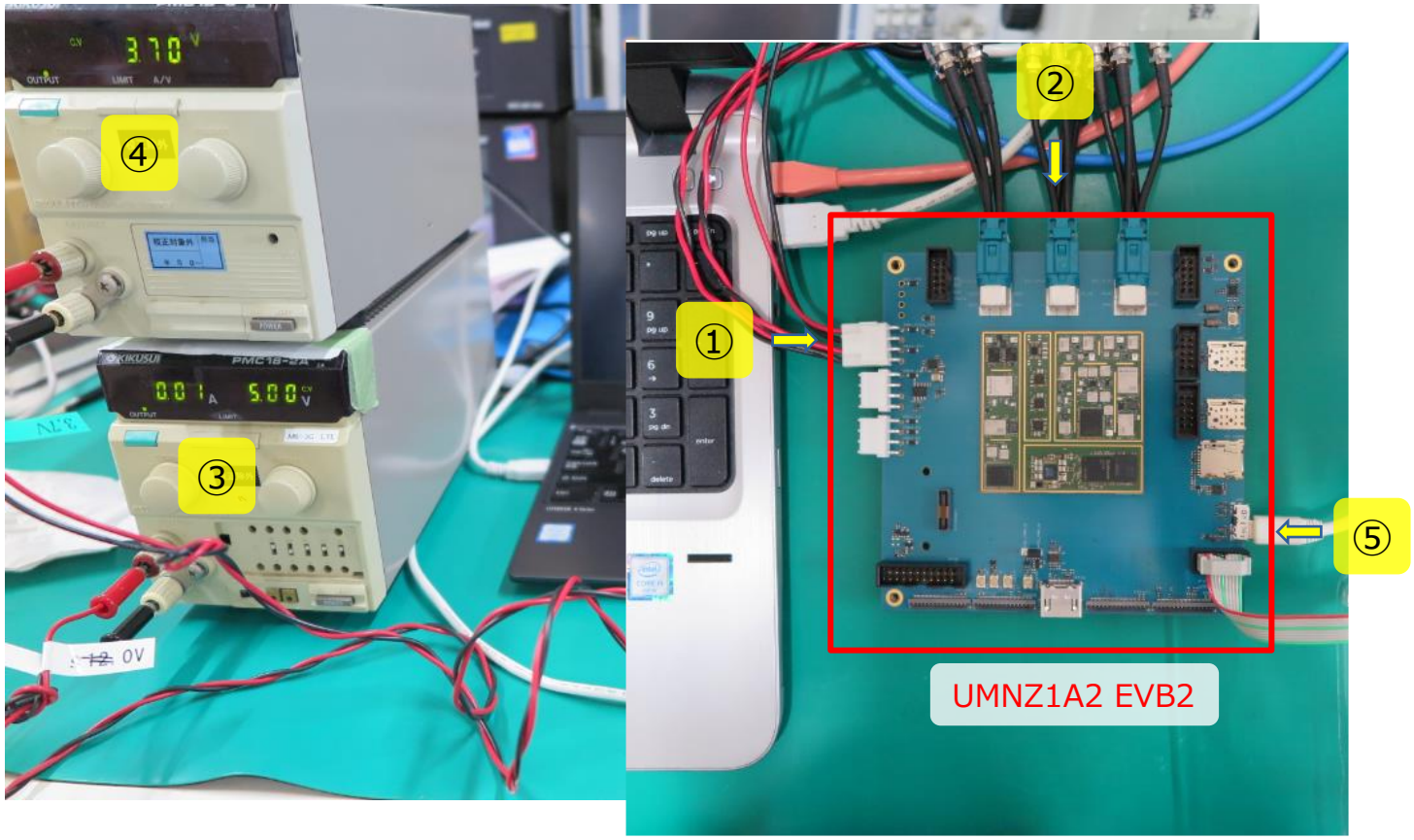

FCC / ISED Statement #1

FCC / ISED Statement

This device complies with Part 15 of the FCC Rules.
Operation is subject to the following two conditions:
1) this device may not cause harmful interference and
2) this device must accept any interference received, including interference that may cause undesired operation.
Federal Communications Commission (FCC) Statement
15.105(b)
This equipment has been tested and found to comply with the limits for a Class B digital device, pursuant to part 15 of the FCC rules. These limits are designed to provide reasonable protection against harmful interference in a residential installation.

This equipment generates, uses and can radiate radio frequency energy and, if not installed and used in accordance with the instructions, may cause harmful interference to radio communications. However, there is no guarantee that interference will not occur in a particular installation. If this equipment does cause harmful interference to radio or television reception, which can be determined by turning the equipment off and on, the user is encouraged to try to correct the interference by one or more of the following measures:
-Reorient or relocate the receiving antenna.
-Increase the separation between the equipment and receiver.
-Connect the equipment into an outlet on a circuit different from that to which the receiver is connected.
-Consult the dealer or an experienced radio/TV technician for help.
15.21
You are cautioned that changes or modifications not expressly approved by the part responsible for compliance could void the user’s authority to operate the equipment.

FCC / ISED Statement #2

ALPSALPINE

Confidential

FCC RF Radiation Exposure Statement:

1. This Transmitter must not be co-located or operating in conjunction with any other antenna or transmitter.
2. This equipment complies with RF radiation exposure limits set forth for an uncontrolled environment. This equipment should be installed and operated, keeping the radiator at least 45cm or more away from the person's body.

This device cannot be used to provide connections between separate buildings or structures.

This device contains licence-exempt transmitter(s)/receiver(s) that comply with Innovation, Science and Economic Development Canada's licence-exempt RSS(s). Operation is subject to the following two conditions:

1. This device may not cause interference, and
2. This device must accept any interference, including interference that may cause undesired operation of the device.

L'émetteur/récepteur exempt de licence contenu dans le présent appareil est conforme aux CNR d'Innovation, Sciences et Développement économique Canada applicables aux appareils radio exempts de licence.

L'exploitation est autorisée aux deux conditions suivantes :

1. l'appareil ne doit pas produire de brouillage, et
2. l'utilisateur de l'appareil doit accepter tout brouillage radioelectrique subi, meme si le brouillage est susceptible d'en compromettre le fonctionnement.

Caution: Exposure to Radio Frequency Radiation

1. To comply with the Canadian RF exposure compliance requirements, this device and its antenna must not be co-located or operating in conjunction with any other antenna or transmitter.
2. To comply with RSS 102 RF exposure compliance requirements, this equipment should be installed and operated, keeping the radiator at least 45cm or more away from the person's body.

Attention: exposition au rayonnement radiofréquence

1. Pour se conformer aux exigences de conformité RF canadienne l'exposition, cet appareil et son antenne ne doivent pas être co-localisés ou fonctionnant en conjonction avec une autre antenne ou transmetteur.
2. Pour se conformer aux exigences de conformité CNR 102 RF exposition, cet équipement doit être installé et utilisé en maintenant le radiateur à au moins 45cm ou plus du corps de la personne.

Installed information

UMNZ1A2 is integrated to the Mother Board as shown in the figure below.

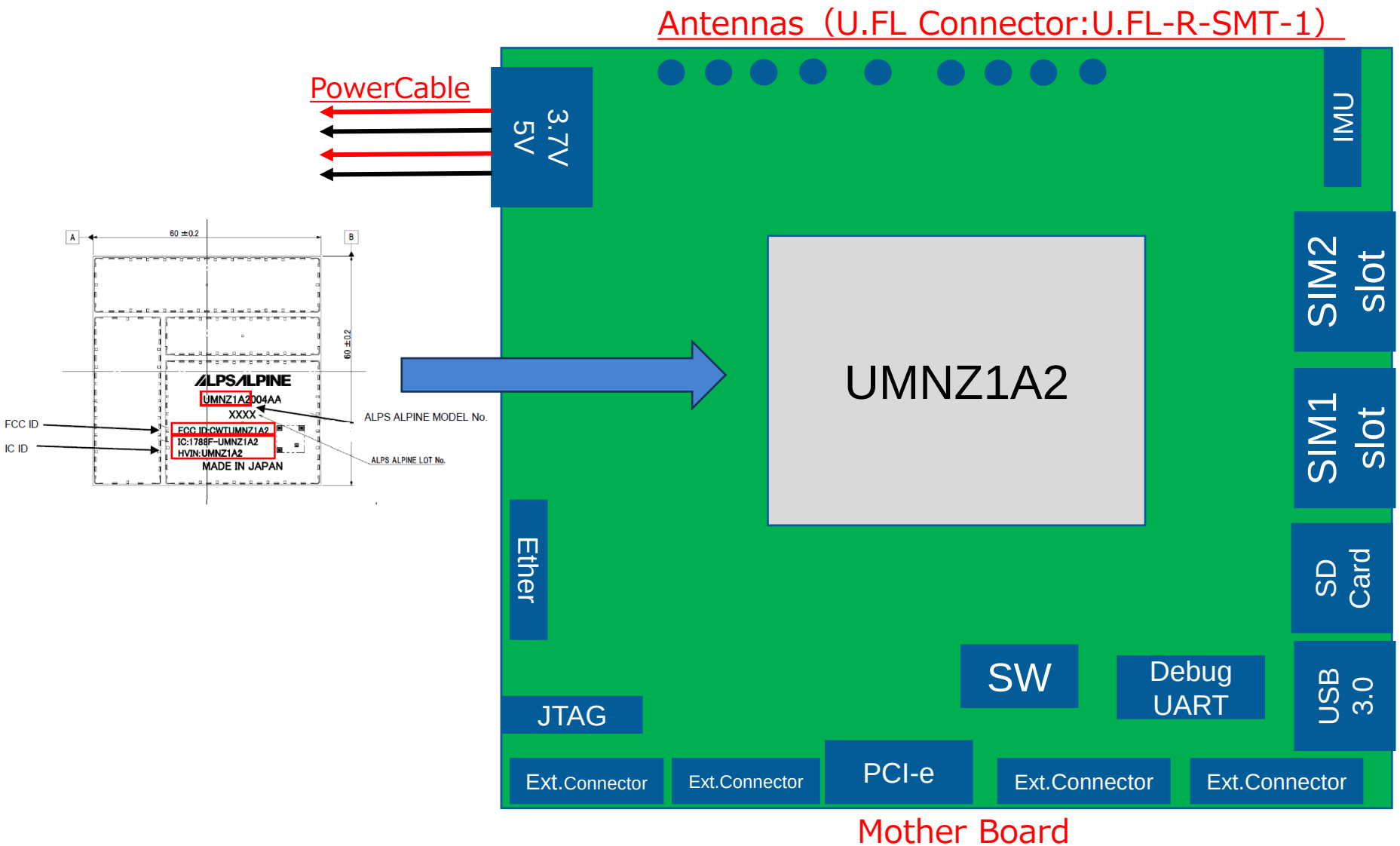

PIN CHARACTERISTICS

Pin Layout

Pin Number

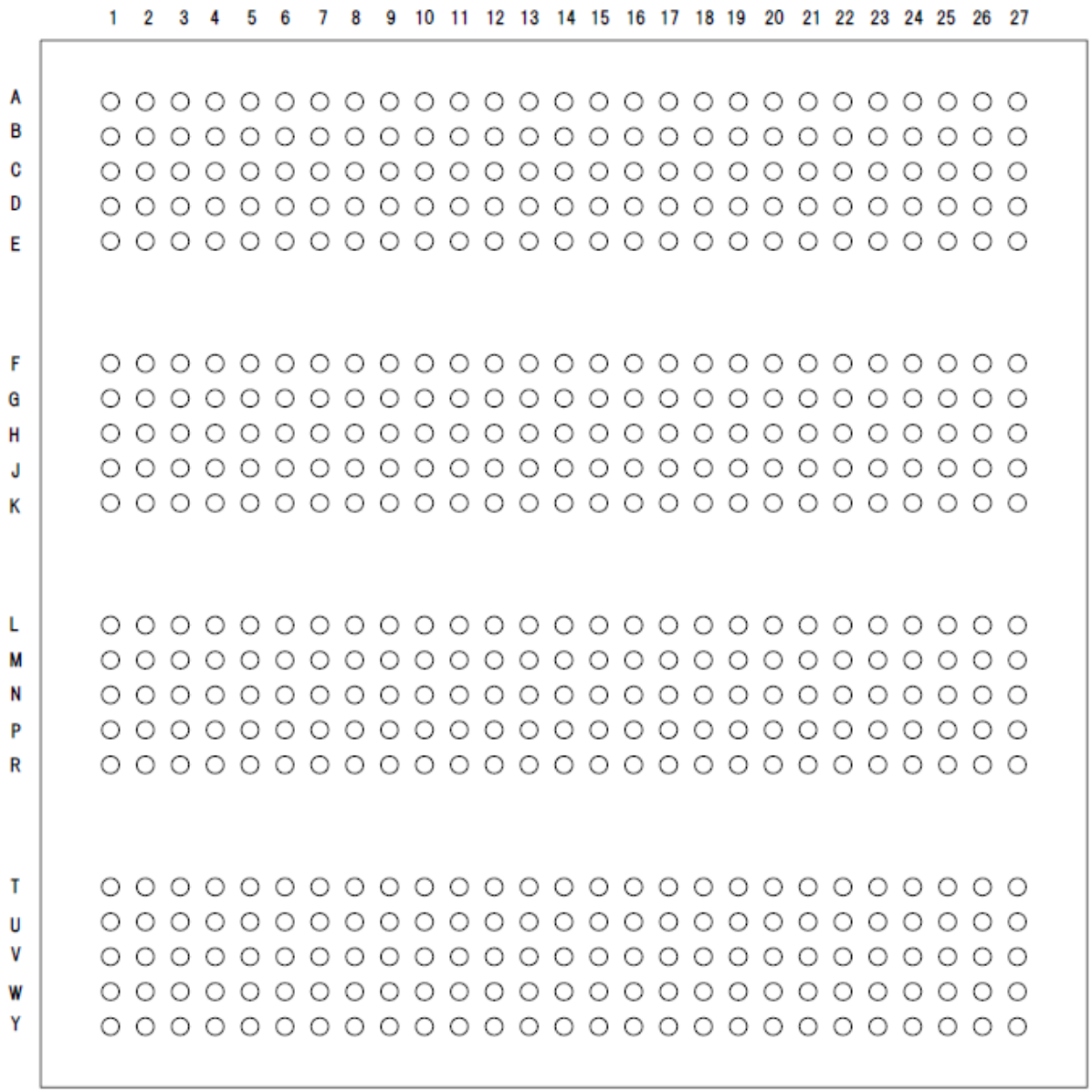

Top view

					DSGD.			
					CHKD.	TITLE UMNZ1A2004AA		PRELIMINARY SPECIFICATION
					APPD.			
SYMB.	DATE OR NO.	APPD.	CHKD.	DSGD.	ALPSALPINE CO., LTD.			

Copyright © 2024 ALPS ALPINE Co., Ltd.

Pin Assignment

Pin No.	Pin Name	I/O *1		Description	
E20	VDDCV2X_5P0	PI		VDD	Power supply input
E21	VDDCV2X_5P0	PI		VDD	Power supply input
G3	VDD_3P7_1	PI		VDD	Power supply input
G4	VDD_3P7_1	PI		VDD	Power supply input
H3	VDD_3P7_1	PI		VDD	Power supply input
H4	VDD_3P7_1	PI		VDD	Power supply input
G24	VDD_3P7_2	PI		VDD	Power supply input
G25	VDD_3P7_2	PI		VDD	Power supply input
H24	VDD_3P7_2	PI		VDD	Power supply input
H25	VDD_3P7_2	PI		VDD	Power supply input
T3	VDDPX_2	PI		VDD	Power supply input
L12	VDDPX_8	PI		VDD	Power supply input
M12	VDD_3P3	PI		VDD	Power supply input
G11	VREG_S2	PO		VDD	Power supply output
G10	VREG_S3	PO		VDD	Power supply output
H11	VREG_S4	PO		VDD	Power supply output
J10	VREG_L6	PO		VDD	Power supply output
K10	VREG_L11	PO		VDD	Power supply output
K11	VREG_L13	PO		VDD	Power supply output
M23	ANT_NAD1_SIM1			Antenna	SIM1 antenna port (Nominal impedance: 50 ohm)
U23	ANT_NAD2_SIM1			Antenna	SIM1 antenna port (Nominal impedance: 50 ohm)
R24	ANT_NAD3_SIM1			Antenna	SIM1 antenna port (Nominal impedance: 50 ohm)
V24	ANT_NAD4_SIM1			Antenna	SIM1 antenna port (Nominal impedance: 50 ohm)
B22	ANT_NAD1_SIM2			Antenna	SIM2 antenna port (Nominal impedance: 50 ohm)
B20	ANT_NAD2_SIM2			Antenna	SIM2 antenna port (Nominal impedance: 50 ohm)
B24	ANT_V2X1_SIM2			Antenna	C-V2X SIM2 antenna port (Nominal impedance: 50 ohm)
D25	ANT_V2X2_SIM2			Antenna	C-V2X SIM2 antenna port (Nominal impedance: 50 ohm)
W22	ANT_GNSS			Antenna	GNSS antenna port (Nominal impedance: 50 ohm)
G12	UIM1_CLK	DO	VREG_L11	UIM	UIM1 clock
H12	UIM1_DATA	B	VREG_L11	UIM	UIM1 data
J12	UIM1_PRESENT	DI	1.8V	UIM	UIM1 detect
K12	UIM1_RESET_N	DO	VREG_L11	UIM	UIM1 reset
G13	UIM2_CLK	DO	VREG_L13	UIM	UIM2 clock
H13	UIM2_DATA	B	VREG_L13	UIM	UIM2 data
J13	UIM2_PRESENT	DI	1.8V	UIM	UIM2 detect
K13	UIM2_RESET_N	DO	VREG_L13	UIM	UIM2 reset
N3	USB_HS_DP	AIO	1.8V	USB	USB HS data plus
N4	USB_HS_DM	AIO	1.8V	USB	USB HS data minus
P3	USB_SS_TX_P	AO	1.8V	USB	USB SS Tx plus
P4	USB_SS_TX_M	AO	1.8V	USB	USB SS Tx minus
R3	USB_SS_RX_P	AI	1.8V	USB	USB SS Rx plus
R4	USB_SS_RX_M	AI	1.8V	USB	USB SS Rx minus
M10	USB_DET	DI	1.8V	USB	USB VBUS detection
U6	SDC_CLK	DO	VDDPX_2	SD Card	SDC clock
T4	SDC_DAT0	B	VDDPX_2	SD Card	SDC data line bit [0]
U4	SDC_DAT1	B	VDDPX_2	SD Card	SDC data line bit [1]
T5	SDC_DAT2	B	VDDPX_2	SD Card	SDC data line bit [2]
U5	SDC_DAT3	B	VDDPX_2	SD Card	SDC data line bit [3]
T6	SDC_CMD	B	VDDPX_2	SD Card	SDC command
U3	SDC_PWR_EN	DO	1.8V	SD Card	SDC enable
V4	SDC_DET_N	DI	1.8V	SD Card	SDC detect
V5	SDC_VSEL	DO	1.8V	SD Card	SDC voltage select

Note1: D = Digital, A = Analog, P = Power supply, I = Input, O = Output, B = Bi-directional

Confidential

Copyright © 2024 ALPS ALPINE Co., Ltd.

Continued

Pin No.	Pin Name	I/O *1		Description	
G8	RGMII_MD_CLK	DO	VDDPX_8	Ethernet	RGMII management data clock
H8	RGMII_MD_IO	B	VDDPX_8	Ethernet	RGMII management data
J7	RGMII_TX_CLK	DO	VDDPX_8	Ethernet	RGMII transmit clock
K7	RGMII_TX_CTL	DO	VDDPX_8	Ethernet	RGMII transmit control
K6	RGMII_TX0	DO	VDDPX_8	Ethernet	RGMII transmit data bit [0]
J6	RGMII_TX1	DO	VDDPX_8	Ethernet	RGMII transmit data bit [1]
K5	RGMII_TX2	DO	VDDPX_8	Ethernet	RGMII transmit data bit [2]
J5	RGMII_TX3	DO	VDDPX_8	Ethernet	RGMII transmit data bit [3]
G7	RGMII_RX_CLK	DI	VDDPX_8	Ethernet	RGMII receiver clock
H7	RGMII_RX_CTL	DI	VDDPX_8	Ethernet	RGMII receiver control
H6	RGMII_RX0	DI	VDDPX_8	Ethernet	RGMII receive data bit [0]
G6	RGMII_RX1	DI	VDDPX_8	Ethernet	RGMII receive data bit [1]
H5	RGMII_RX2	DI	VDDPX_8	Ethernet	RGMII receive data bit [2]
G5	RGMII_RX3	DI	VDDPX_8	Ethernet	RGMII receive data bit [3]
H9	PHY_RESET_N	DO	1.8V	Ethernet	Ethernet PHY reset
K8	PHY_TX_DISABLE	DO	1.8V	Ethernet	RGMII transmit enable
J8	PHY_INT_N	DI	1.8V	Ethernet	Interrupt from ethernet PHY
J9	PHY_VREG_EN1	DO	1.8V	Ethernet	Power supply ethernet PHY enable 1
K9	PHY_VREG_EN2	DO	1.8V	Ethernet	Power supply ethernet PHY enable 2
W3	BSM_UART_TX	DO	1.8V	BSM	BSM UART transmit data
W4	BSM_UART_RX	DI	1.8V	BSM	BSM UART receive data
W6	DBG_UART_TX	DO	1.8V	Debug	Debug UART transmit data
W5	DBG_UART_RX	DI	1.8V	Debug	Debug UART receive data
U16	SENS_I2C_SCL	B	1.8V	IMU	I2C clock
V16	SENS_I2C_SDA	DO	1.8V	IMU	I2C data
U15	SENSOR_INT2	DI	1.8V	IMU	Interrupt 2 from sensor
V15	SENSOR_INT1	DI	1.8V	IMU	Interrupt 1 from sensor
W14	SENS_VREG_EN	DO	1.8V	IMU	Power supply for sensor enable
V11	CDC_I2C_SCL	B	1.8V	CODEC	I2C clock
W11	CDC_I2C_SDA	B	1.8V	CODEC	I2C data
W8	CDC_I2S_SCK	B	1.8V	CODEC	MI2S clock
V8	CDC_I2S_DIN	B	1.8V	CODEC	MI2S data 0
U8	CDC_I2S_DOUT	B	1.8V	CODEC	MI2S data 1
V9	CDC_I2S_WS	B	1.8V	CODEC	MI2S word select
W9	CDC_I2S_MCLK	DO	1.8V	CODEC	Audio master clock
W12	CDC_RESET_N	DO	1.8V	CODEC	Codec reset
V12	CDC_VREG_EN	DO	1.8V	CODEC	Codec enable
H22	NAD_UART_TX	DO	1.8V	UART	UART transmit data
G22	NAD_UART_Rx	DI	1.8V	UART	UART receive data
G21	NAD_UART_CTS	DI	1.8V	UART	UART clear-to-send
H21	NAD_UART_RTS	DO	1.8V	UART	UART ready-for-receive
G17	JTAG_TMS	DI	1.8V	Debug	JTAG mode select input
G18	JTAG_TRST_N	DI	1.8V	Debug	JTAG test reset
H17	JTAG_TDI	DI	1.8V	Debug	JTAG data input
H18	JTAG_TCK	DI	1.8V	Debug	JTAG clock input
J17	JTAG_SRST_N	DI	1.8V	Debug	JTAG system reset
J18	JTAG_TDO	DO	1.8V	Debug	JTAG data output

Note1: D = Digital, A = Analog, P = Power supply, I = Input, O = Output, B = Bi-directional

Confidential

Copyright © 2024 ALPS ALPINE Co., Ltd.

Continued

Pin No.	Pin Name	I/O *1			Description
L13	GNSS_VREG_EN	DO	1.8V		Power supply for GNSS enable
V3	PPS	DO	1.8V		PPS_OUT for Navigation Dead Reckoning Sync
L8	PMIC_PS_HOLD	DO	1.8V		Power-supply hold signal to PMIC
L9	PMIC_PON	DI	1.8V		Power-on input signal to PMIC
M8	PMIC_CBL_PWR_N	DI	1.8V		Cable power-on input for PMIC
M9	PMIC_RESET_N	DI	1.8V		Reset input for PMIC
N8	PMIC_KPD_PWR_N	DI	1.8V		Power-on trigger for PMIC
R7	RESOUT_N	DO	1.8V		Reset output from Modem
W17	FORCED_USB_BOOT	DI	1.8V		Boot configuration
N6	GPIO_31	DO	1.8V		SA2AP_ERR_FATAL
M7	GPIO_33	DO	1.8V		SA2AP_STATUS
V17	GPIO_61	DI	1.8V		NAD_LE_BOOT_MODE
L7	GPIO_96	DO	1.8V		SA2AP_WAKEUP

Note1: D = Digital, A = Analog, P = Power supply, I = Input, O = Output, B = Bi-directional

Confidential

Copyright © 2024 ALPS ALPINE Co., Ltd.

Continued

Pin No.	Pin Name	I/O *1	Description
G15	GPIO_7		General-purpose input/output
G16	GPIO_6		
G19	GPIO_19		
G20	GPIO_16		
H15	GPIO_4		
H16	GPIO_5		
H19	GPIO_17		
H20	GPIO_18		
J15	GPIO_83		
J16	GPIO_82		
J20	GPIO_06		
J22	GPIO_01		
J23	GPIO_010		
K14	GPIO_88		
K15	GPIO_80		
K16	GPIO_81		
K17	GPIO_22		
K18	GPIO_86		
K19	GPIO_103		
K20	GPIO_105		
K22	GPIO_02		
L11	GPIO_40		
N7	GPIO_41		
N9	GPIO_53		
N10	GPIO_44		
P6	GPIO_76		
P7	GPIO_77		
P9	GPIO_57		
P10	GPIO_45		
R6	GPIO_75		
R9	GPIO_56		
R10	GPIO_52		
U11	GPIO_95		
U12	GPIO_97		
U13	GPIO_94		
U14	GPIO_106		
V13	GPIO_93		
V14	GPIO_107		
W13	GPIO_71		

Confidential

Copyright © 2024 ALPS ALPINE Co., Ltd.

Continued

Pin No.	Pin Name	I/O	Description
G23			
J25			
K13			
K23			
K24			
K25			
L10			
L3			
L4			
L5			
M3			
M4			
M5			
P8			
R8			
U19			
V19			
V22			
V6			
W19			

Pin No.	Pin Name	I/O	Description
A1	NC	-	Non-connection terminal
A2			
A26			
A27			
B1			
B27			
F1			
F2			
F26			
F27			
G1			
G27			
W1			
W27			
Y1			
Y2			
Y26			
Y27			

Confidential

Copyright © 2024 ALPS ALPINE Co., Ltd.

Continued

Pin No.	Pin Name	I/O	Description
A3			
A4			
A5			
A6			
A7			
A8			
A9			
A10			
A11			
A12			
A13			
A14			
A15			
A16			
A17			
A18			
A19			
A20			
A21			
A22			
A23			
A24			
A25	GND	-	Ground
B2			
B3			
B4			
B5			
B6			
B7			
B8			
B9			
B10			
B11			
B12			
B13			
B14			
B15			
B16			
B17			
B18			
B19			
B21			
B23			
B25			
B26			

Confidential

Copyright © 2024 ALPS ALPINE Co., Ltd.

Continued

Pin No.	Pin Name	I/O	Description
C1			
C2			
C3			
C4			
C5			
C6			
C7			
C8			
C9			
C10			
C11			
C12			
C13			
C14			
C15			
C16			
C17			
C18			
C19			
C20			
C21			
C22			
C23			
C24			
C25			
C26			
C27	GND	-	Ground
D1			
D2			
D3			
D4			
D5			
D6			
D7			
D8			
D9			
D10			
D11			
D12			
D13			
D14			
D15			
D16			
D17			
D18			
D19			
D20			
D21			
D22			
D23			
D24			
D26			
D27			

Confidential

Copyright © 2024 ALPS ALPINE Co., Ltd.

Continued

Pin No.	Pin Name	I/O	Description
E1			
E2			
E3			
E4			
E5			
E6			
E7			
E8			
E9			
E10			
E11			
E12			
E13			
E14			
E15			
E16			
E17			
E18			
E19			
E22			
E23			
E24			
E25			
E26	GND	-	Ground
E27			
F3			
F4			
F5			
F6			
F7			
F8			
F9			
F10			
F11			
F12			
F13			
F14			
F15			
F16			
F17			
F18			
F19			
F20			
F21			
F22			
F23			
F24			
F25			

Confidential

Copyright © 2024 ALPS ALPINE Co., Ltd.

Continued

Pin No.	Pin Name	I/O	Description
G2			
G9			
G14			
G26			
H1			
H2			
H10			
H14			
H23			
H26			
H27			
J1			
J2			
J3			
J4			
J11			
J13			
J14			
J19			
J21			
J24			
J26			
J27			
K1	GND	-	Ground
K2			
K3			
K4			
K21			
K26			
K27			
L1			
L2			
L6			
L14			
L15			
L16			
L17			
L18			
L19			
L20			
L21			
L22			
L23			
L24			
L25			
L26			
L27			

Confidential

Copyright © 2024 ALPS ALPINE Co., Ltd.

Continued

Pin No.	Pin Name	I/O	Description
M1	GND	-	Ground
M2			
M6			
M11			
M13			
M14			
M15			
M16			
M17			
M18			
M19			
M20			
M21			
M22			
M24			
M25			
M26			
M27			
N1			
N2			
N5			
N11			
N12			
N13			
N14			
N15			
N16			
N17			
N18			
N19			
N20			
N21			
N22			
N23			
N24			
N25			
N26			
N27			

Confidential

Copyright © 2024 ALPS ALPINE Co., Ltd.

Continued

Pin No.	Pin Name	I/O	Description
P1			
P2			
P5			
P11			
P12			
P13			
P14			
P15			
P16			
P17			
P18			
P19			
P20			
P21			
P22			
P23			
P24			
P25			
P26			
P27	GND	-	Ground
R1			
R2			
R5			
R11			
R12			
R13			
R14			
R15			
R16			
R17			
R18			
R19			
R20			
R21			
R22			
R23			
R25			
R26			
R27			

Confidential

Copyright © 2024 ALPS ALPINE Co., Ltd.

Continued

Pin No.	Pin Name	I/O	Description
T1	GND	-	Ground
T2			
T7			
T8			
T9			
T10			
T11			
T12			
T13			
T14			
T15			
T16			
T17			
T18			
T19			
T20			
T21			
T22			
T23			
T24			
T25			
T26			
T27			
U1			
U2			
U7			
U9			
U10			
U17			
U18			
U20			
U21			
U22			
U24			
U25			
U26			
U27			
V1			
V2			
V7			
V10			
V18			
V20			
V21			
V23			
V25			
V26			
V27			

Confidential

Copyright © 2024 ALPS ALPINE Co., Ltd.

Continued

Pin No.	Pin Name	I/O	Description
W2			
W7			
W10			
W15			
W16			
W18			
W20			
W21			
W23			
W24			
W25			
W26			
Y3			
Y4			
Y5			
Y6			
Y7			
Y8	GND	-	Ground
Y9			
Y10			
Y11			
Y12			
Y13			
Y14			
Y15			
Y16			
Y17			
Y18			
Y19			
Y20			
Y21			
Y22			
Y23			
Y24			
Y25			

Confidential

Copyright © 2024 ALPS ALPINE Co., Ltd.

Integration information #1

Confidential

Layout guide of RF trace for the U.FL antenna connector

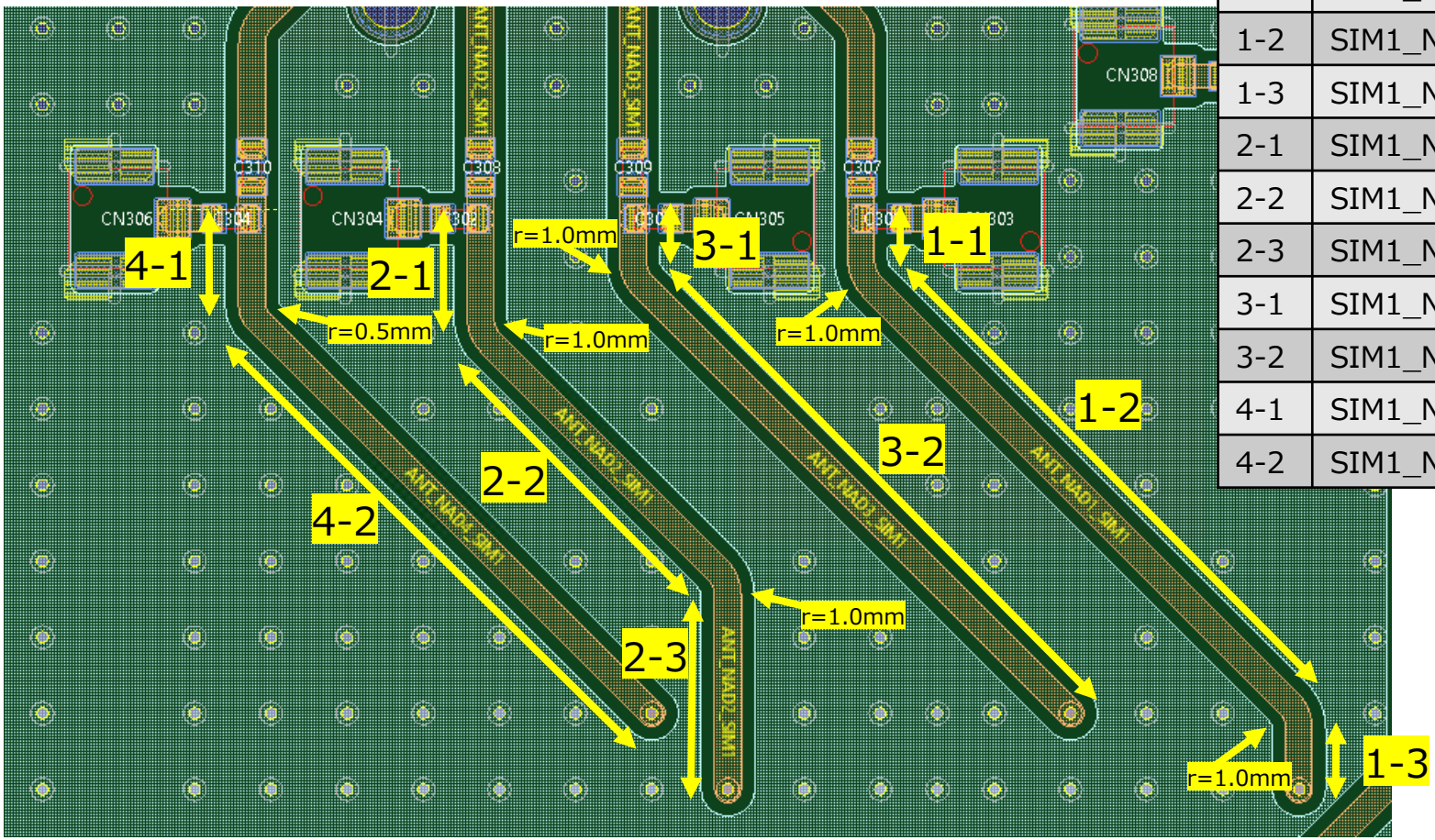

1-1	SIM1_NAD1	1.08mm
1-2	SIM1_NAD1	15.43mm
1-3	SIM1_NAD1	1.58mm
2-1	SIM1_NAD2	2.58mm
2-2	SIM1_NAD2	8.36mm
2-3	SIM1_NAD2	5.08mm
3-1	SIM1_NAD3	1.08mm
3-2	SIM1_NAD3	15.84mm
4-1	SIM1_NAD4	2.29mm
4-2	SIM1_NAD4	14.64mm

Integration information #2

ALPSALPINE
Confidential

Layout guide of RF trace for the U.FL antenna connector

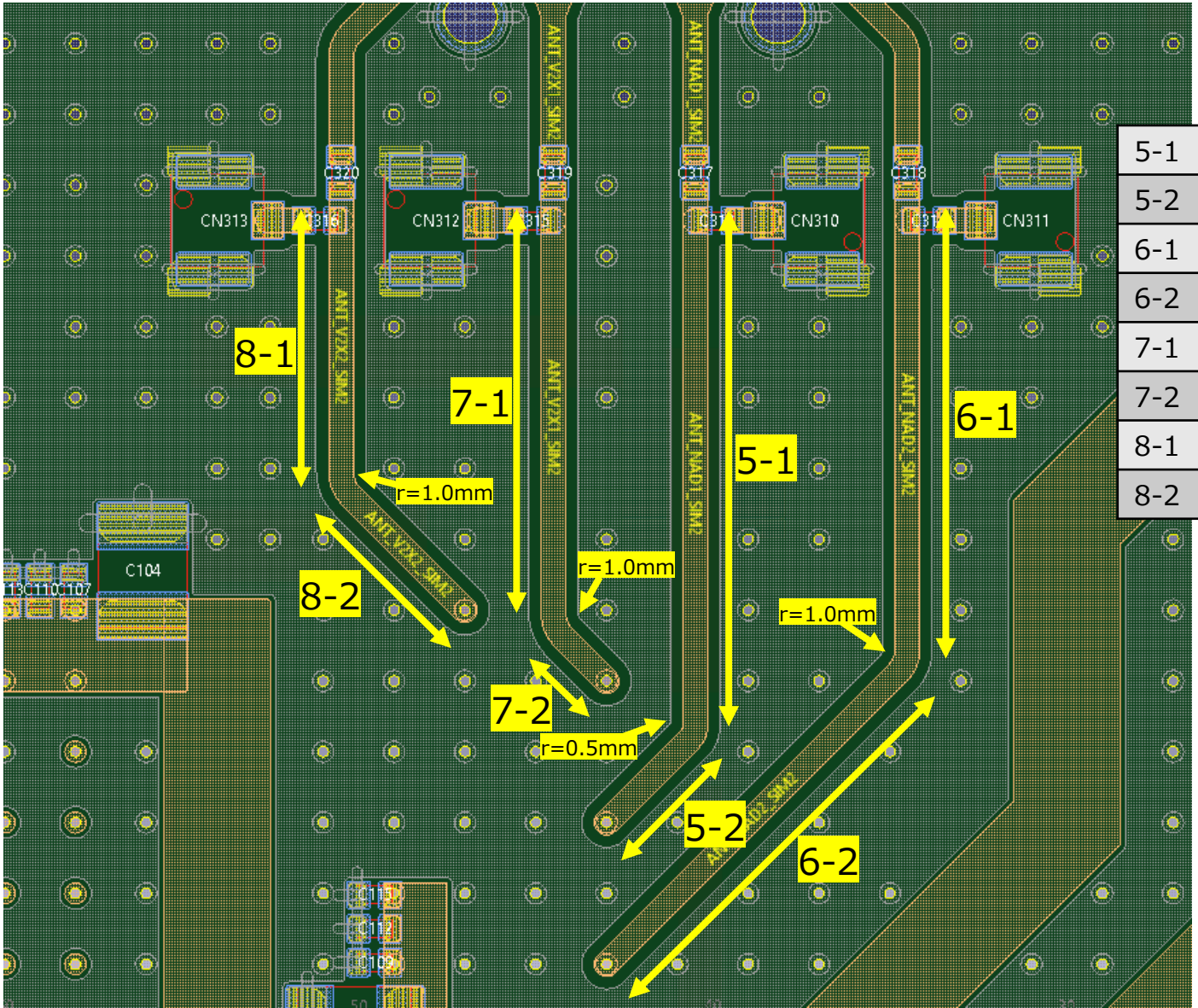

5-1	SIM2_NAD1	14.29mm
5-2	SIM2_NAD1	3.32mm
6-1	SIM2_NAD2	12.08mm
6-2	SIM2_NAD2	11.60mm
7-1	SIM2_V2X1	11.08mm
7-2	SIM2_V2X1	1.70mm
8-1	SIM2_V2X2	7.08mm
8-2	SIM2_V2X2	4.53mm

Integration information #3

ALPSALPINE
Confidential

Layout guide of RF trace for the U.FL antenna connector

9-1	GNSS	13.29mm
9-2	GNSS	8.57mm
9-3	GNSS	16.87mm
9-4	GNSS	3.07mm
9-5	GNSS	0.25mm

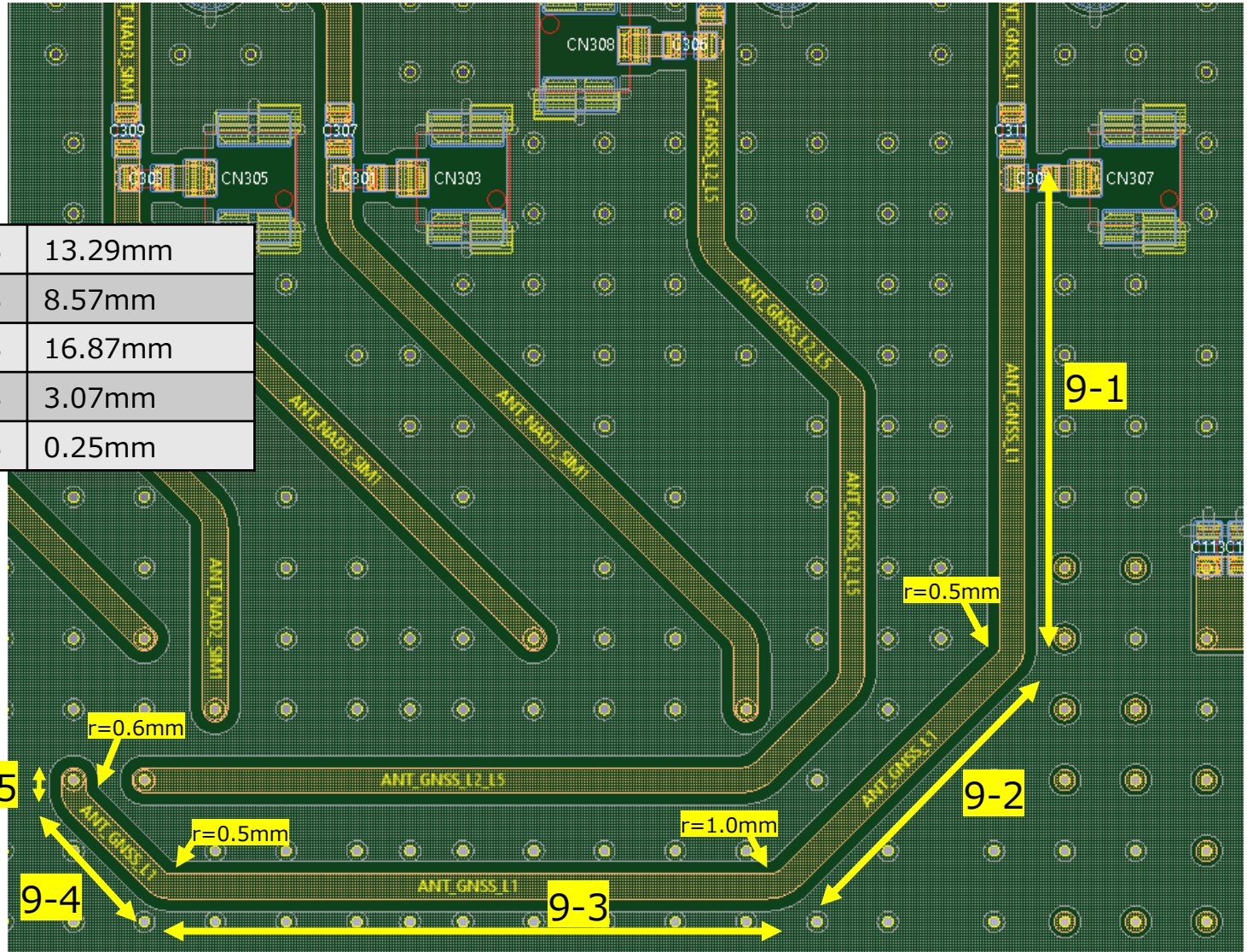

Integration information #4

ALPSALPINE
Confidential

Layout guide of RF trace for the U.FL antenna connector

Dimension and material of RF trace (50Ω microstrip line)

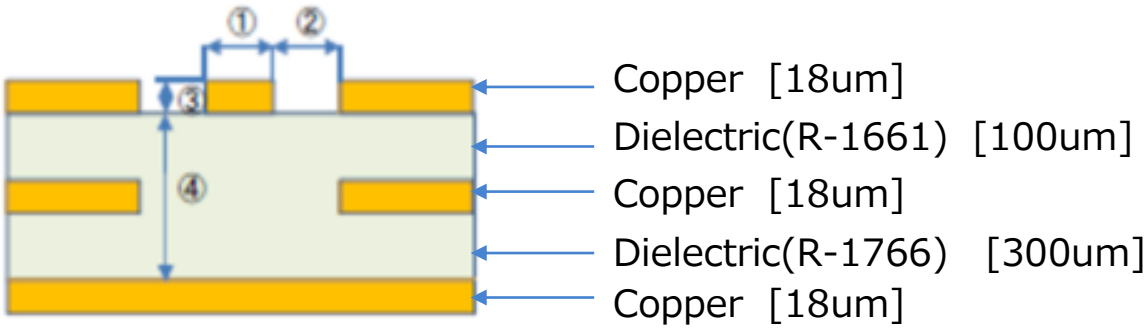

①	0.7mm
②	0.35mm
③	0.018mm
④	0.418mm

Test procedures for design verification

i. Set Transmission in the supported modulation mode from the device in engineering mode.
ii. Verify RF power through conducted measurement at balanced impedance of 50ohms, the KDB 971168 D01 Power Meas License Digital System shall be used as the supplemental test methodology to adjust the proper setting obtaining the measurement results.
iii. Verify the Tx power in datasheet, and compliance test reports.

This module has been tested and found to comply with the following requirements for Modular Approval.

- Part 22H – Cellular radiotelephone service
- Part 24E – Broadband PCS
- Part 27C – Technical standards

RF exposure considerations

In the end product, the antenna(s) used with this transmitter must be installed to provide a separation distance of at least 45cm from all persons and must not be co-located or operation in conjunction with any other antenna or transmitter except in accordance with multi-transmitter product procedures. User and installers must be provided with antenna installation instructions and transmitter operating conditions for satisfying the RF exposure compliance.

Antennas

This radio transmitter has been approved by the FCC / ISED to operate with antenna(s) / the maximum permissible gain indicated below.

Antenna Type	Antenna Model No.
PCB monopole	Ant1
	Ant2
	Ant3
	Ant4
	Ant5
	Ant6
	Ant7
	Ant8

SIM 1

Modulation	Frequency (MHz)	Peak Antenna Gain (dBi)			
		Ant1	Ant2	Ant3	Ant4
GSM/GPRS/EDGE 850	824.2 ~ 848.8	1.27	2.68	3.15	3.06
GSM/GPRS/EDGE 1900	1850.2 ~ 1909.8	3.04	3.09	3.3	2.68
WCDMA / HSPA+ Band II	1852.4 ~ 1907.6	3.04	3.09	3.3	2.68
WCDMA / HSPA+ Band IV	1712.4 ~ 1752.6	3.17	2.91	3.32	2.51
WCDMA / HSPA+ Band V	826.4 ~ 846.6	1.27	2.68	3.15	3.06
LTE-Band 2 / n2	1850 ~ 1910	3.04	3.09	3.3	2.68
LTE-Band 4	1710 ~ 1755	3.17	2.91	3.32	2.51
LTE-Band 5 / n5	824 ~ 849	1.27	2.68	3.15	3.06
LTE-Band 12	699 ~ 716	3.2	3.09	3.37	3.14
LTE-Band 13	777 ~ 787	3.2	3.09	3.37	3.14
LTE-Band 66 / n66	1710 ~ 1780	3.17	2.91	3.32	2.51
LTE-Band 71 / n71	663 ~ 698	3.35	2.94	3.73	3.16
n41	2496 ~ 2690	2.97	3.22	3.32	3.84
n77	3450 ~ 3980	3.37	3.68	3.96	3.36

SIM 2

Modulation	Frequency (MHz)			Peak Antenna Gain (dBi)			
				Ant5	Ant6	Ant7	Ant8
GSM/GPRS/EDGE 850	824.2	~	848.8	**3.22**	**1.05**	N/A	N/A
GSM/GPRS/EDGE 1900	1850.2	~	1909.8	**2.64**	**2.98**	N/A	N/A
LTE-Band 2	1850	~	1910	**2.64**	**2.98**	N/A	N/A
LTE-Band 4	1710	~	1755	**2.64**	**2.16**	N/A	N/A
LTE-Band 5	824	~	849	**3.22**	**1.05**	N/A	N/A
LTE-Band 12	699	~	716	**1.02**	**1.79**	N/A	N/A
LTE-Band 13	777	~	787	**1.02**	**1.79**	N/A	N/A
LTE-Band 47	5895	~	5925	N/A	N/A	**-0.36**	**0.01**
LTE-Band 66	1710	~	1780	**2.64**	**2.16**	N/A	N/A
LTE-Band 71	663	~	698	**3.33**	**4.21**	N/A	N/A

Required End Product Labeling

Any device incorporating this module must display an external, visible, permanently affixed label with the FCC ID and the ISED certification number preceded by the term as follows.
“ **Contains FCC ID:** CWTUMNZ1A2”
“ **Contains IC:** 1788F-UMNZ1A2 ”

Obligation d'étiquetage du produit final:

Tout appareil intégrant ce module doit afficher une étiquette externe, visible et apposée en permanence avec le numéro de certification ISDE précédé du terme comme suit.

« **Contient IC :** 1788F-UMNZ1A2»

The OEM integrator has to be aware not to provide information to the end user regarding how to install or remove this RF module in the user’s manual of the end product which integrates this module. The end user manual shall include all required regulatory information/warning as shown in User manual.

Test Modes

This device uses various test mode programs for test set up which operate separate from production firmware. Host integrators should contact the grantee for assistance with test modes needed for module/host compliance test requirements.

Additional testing, Part 15 Subpart B disclaimer

The modular transmitter is only FCC authorized for the specific rule parts (i.e., FCC transmitter rules) listed on the grant, and that the host product manufacturer is responsible for compliance to any other FCC rules that apply to the host not covered by the modular transmitter grant of certification.

The final host product still requires Part 15 Subpart B compliance testing with the modular transmitter installed.

Note EMI Considerations

Note that a host manufacture is recommended to use KDB996369 D04 Module Integration Guide recommending as "best practice" RF design engineering testing and evaluation in case non-linear interactions generate additional non-compliant limits due to module placement to host components or properties.

For standalone mode, reference the guidance in KDB996369 D04 Module Integration Guide and for simultaneous mode; see KDB996369 D02 Module Q&A Question 12, which permits the host manufacturer to confirm compliance.

How to make changes

Only Grantees are permitted to make permissive changes, if the module will be used differently than granted conditions, please contact us to ensure modifications will not affect compliance.