3 Pre-driving checks and adjustments

Keys 3-2
Nissan vehicle immobilizer system keys 3-2
Intelligent keys (if so equipped) 3-3
Doors 3-4
Locking with key. 3-4
Locking with inside lock knob 3-5
Locking with power door lock switch (if so equipped) 3-6
Child safety rear door lock. 3-6
Remote keyless entry system (models without Intelligent Key system) (if so equipped). 3-7
How to use remote keyless entry system 3-7
Intelligent Key system (if so equipped) 3-10
Operating range. 3-12
Door locks/unlocks precaution 3-13
Intelligent Key operation 3-13
How to use the remote keyless entry function 3-16
Warning lights and audible reminders 3-19
Warning signals 3-19
Troubleshooting guide 3-21
Hood 3-22
Rear hatch. 3-23
Opening the rear hatch. 3-23
Rear hatch release. 3-24
Fuel-filler door 3-25
Opener operation. 3-25
Fuel-filler cap 3-25
Steering wheel 3-26
Tilt operation. 3-26
Sun visors 3-27
Vanity mirrors (if so equipped). 3-27
Mirrors 3-27
Rearview mirror 3-27
Outside mirrors 3-28

☞ **REVIEW COPY—*2007 Versa*** *(vrs)*
Owners Manual—USA_English *(nna)*
03/06/06—arosenma ☜

KEYS

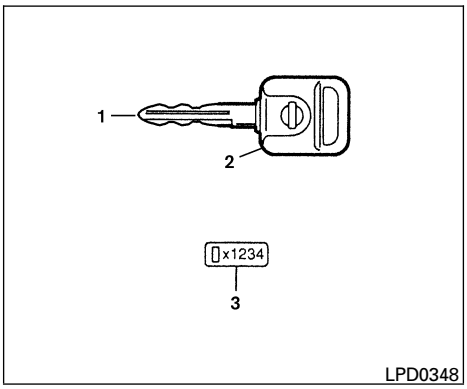

1. Two master keys (black) with transponder chip and chrome NISSAN brand symbol on one side
2. Transponder chip
3. Key number plate

A key number plate is supplied with your keys. Record the key number and keep it in a safe place (such as your wallet), not in the vehicle. If you lose your keys, see a NISSAN dealer for duplicates by using the key number. NISSAN does not record key numbers so it is very important to keep track of your key number plate.

A key number is only necessary when you have lost all keys and do not have one to duplicate from. If you still have a key, your NISSAN dealer can duplicate it.

NISSAN VEHICLE IMMOBILIZER SYSTEM KEYS

You can only drive your vehicle using the master keys which are registered to the NISSAN Vehicle Immobilizer System components in your vehicle. These keys have a transponder chip in the key head.

The master key can be used for all the locks.

Never leave these keys in the vehicle.

Additional or replacement keys:

If you still have a key, the key number is not necessary when you need extra NISSAN Vehicle Immobilizer System keys. Your dealer can duplicate your existing key. As many as five NISSAN Vehicle Immobilizer System keys can be used with one vehicle. You should bring all NISSAN Vehicle Immobilizer System keys that you have to your NISSAN dealer for registration. This is because the registration process will erase the memory of all key codes previously registered into the NISSAN Vehicle Immobilizer System. After the registration process, these components will only recognize keys coded into the NISSAN Vehicle Immobilizer System during registration. Any key that is not given to your dealer at the time of registration will no longer be able to start your vehicle.

Do not allow the immobilizer system key, which contains an electrical transponder, to come into contact with salt water. This could affect system function.

☞ **REVIEW COPY—*2007 Versa*** *(vrs)*
Owners Manual—USA_English *(nna)*
03/06/06—arosenma ☜

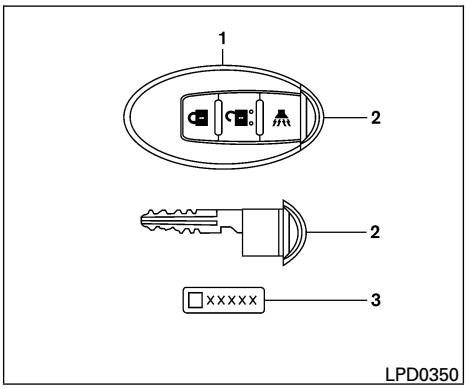

1. Two Intelligent Keys
2. Mechanical keys (inside Intelligent Keys)
3. Key number plate

INTELLIGENT KEYS (if so equipped)

Your vehicle can only be driven with the Intelligent Keys which are registered to your vehicle's Intelligent Key system components and NISSAN Vehicle Immobilizer System components. As many as 4 Intelligent Keys can be registered and used with one vehicle. The new keys must be registered by a NISSAN dealer prior to use with the Intelligent Key system and NISSAN Vehicle Immobilizer System of your vehicle. Since the registration process requires erasing all memory in the Intelligent Key components when registering new keys, be sure to take all Intelligent Keys that you have to the NISSAN dealer.

⚠ CAUTION

- **Do not allow the Intelligent Key, which contains electrical components, to come into contact with water or salt water. This could affect the system function.**
- **Do not drop the Intelligent Key.**
- **Do not strike the Intelligent Key sharply against another object.**
- **Do not place the Intelligent Key for an extended period in an area where temperatures exceed 140°F (60°C).**
- **Do not attach the Intelligent Key with a key holder that contains a magnet.**
- **Do not place the Intelligent Key near equipment that produces a magnetic field, such as a TV, audio equipment and personal computers.**

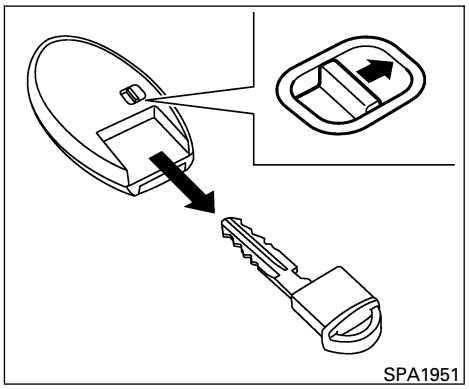

Mechanical key

The Intelligent Key contains the mechanical key, which can be used in case of a discharged battery.

To remove the mechanical key, release the lock knob on the back of the Intelligent Key.

To install the mechanical key, firmly insert it into the Intelligent Key until the lock knob returns to the lock position.

The mechanical key can be used for operation in the same way as an ordinary key.

☞ **REVIEW COPY—*2007 Versa*** *(vrs)*
Owners Manual—USA_English *(nna)*
03/06/06—arosenma ☜

DOORS

⚠ CAUTION

Always carry the mechanical key installed in the Intelligent Key slot.

⚠ WARNING

- **Always have the doors locked while driving. Along with the use of seat belts, this provides greater safety in the event of an accident by helping to prevent persons from being thrown from the vehicle. This also helps keep children and others from unintentionally opening the doors, and will help keep out intruders.**
- **Before opening any door, always look for and avoid oncoming traffic.**
- **Do not leave children unattended inside the vehicle. They could unknowingly activate switches or controls. Unattended children could become involved in serious accidents.**

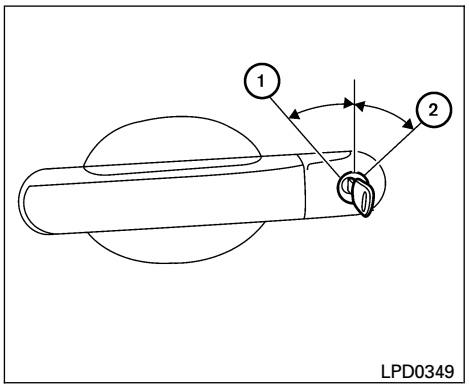

Driver's side

LOCKING WITH KEY

Manual

To lock a door, turn the key toward the front of the vehicle ①. To unlock, turn the key toward the rear ②.

☞ **REVIEW COPY—*2007 Versa*** *(vrs)*
Owners Manual—USA_English *(nna)*
03/06/06—arosenma ☜

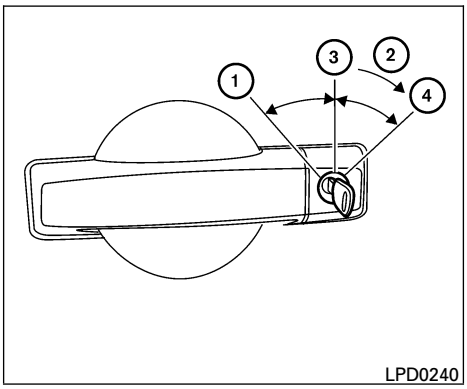

Power (if so equipped)

The power door lock system allows you to lock or unlock all doors at the same time.

Turning the key toward the front ① of the vehicle locks all doors.

Turning the key one time toward the rear ② of the vehicle unlocks that door. From that position, returning the key to neutral ③ (where the key can only be removed and inserted) and turning it toward the rear again within 5 seconds unlocks all doors ④.

Opening and closing windows (if so equipped)

The driver's door key operation allows you to open and close windows equipped with automatic operation at the same time.

- To open the windows, turn the driver's door key toward the rear of the vehicle for **longer than 1 second** after the door is unlocked.
- To close the windows, turn the driver's door key toward the front of the vehicle for **longer than 1 second** after the door is locked.

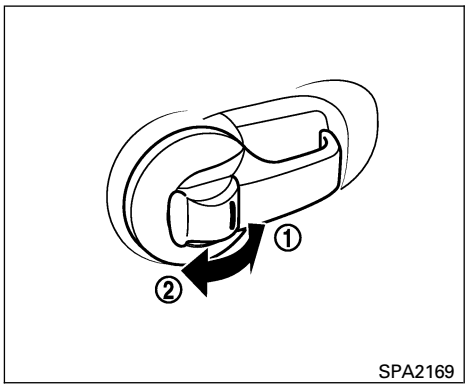

Inside lock

LOCKING WITH INSIDE LOCK KNOB

To lock the door without the key, move the inside lock knob to the lock position ①, then close the door.

To unlock the door without the key, move the inside lock knob to the unlock position ②.

☞ **REVIEW COPY—*2007 Versa*** *(vrs)*
Owners Manual—USA_English *(nna)*
03/06/06—arosenma ☜

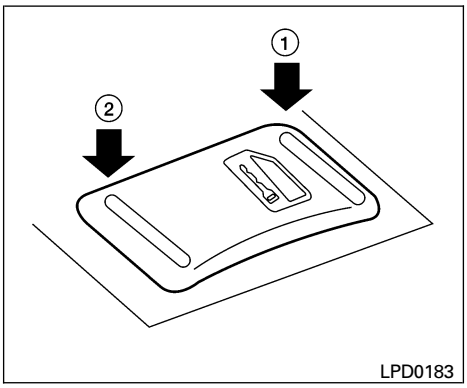

Door lock switch

LOCKING WITH POWER DOOR LOCK SWITCH (if so equipped)

To lock all the doors without a key, push the door lock switch (driver's or front passenger's side) to the lock position ①. When locking the door this way, be certain not to leave the key inside the vehicle.

To unlock all the doors without a key, push the door lock switch (driver's or front passenger's side) to the unlock position ②.

Lockout protection

When the power door lock switch (driver's or front passenger's side) is moved to the lock position with the key in the ignition and any door open, all doors will lock and unlock automatically. This helps to prevent the keys from being accidently locked inside the vehicle.

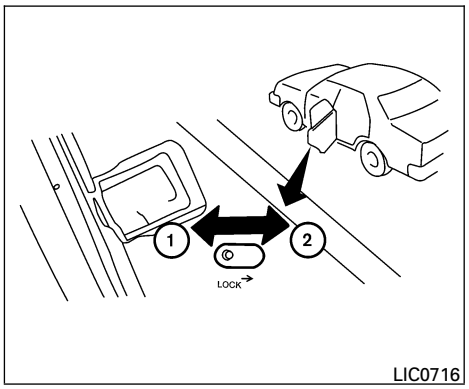

CHILD SAFETY REAR DOOR LOCK

Child safety locks help prevent the rear doors from being opened accidentally, especially when small children are in the vehicle.

The child safety lock levers are located on the edge of the rear doors.

When the lever is in the unlock position ①, the door can be opened from the outside or the inside.

When the lever is in the lock position ②, the door can be opened only from the outside.

☞ **REVIEW COPY—*2007 Versa*** *(vrs)*
Owners Manual—USA_English *(nna)*
03/06/06—arosenma ☜

REMOTE KEYLESS ENTRY SYSTEM (models without Intelligent Key system) (if so equipped)

It is possible to lock/unlock all doors, turn the interior lights on, and activate the panic alarm by using the keyfob from outside the vehicle.

Be sure to remove the key from the vehicle before locking the doors.

The keyfob can operate at a distance of approximately 33 ft (10 m) from the vehicle. The effective distance depends on the conditions around the vehicle.

As many as 5 keyfobs can be used with one vehicle. For information concerning the purchase and use of additional keyfobs, contact a NISSAN dealer.

The keyfob will not function when:

- the battery is discharged
- the distance between the vehicle and the keyfob is over 33 ft (10 m)

The panic alarm will not activate when the key is in the ignition switch.

⚠ CAUTION

Listed below are conditions or occurrences which will damage the keyfob:

- **Do not allow the keyfob to become wet.**
- **Do not drop the keyfob.**
- **Do not strike the keyfob sharply against another object.**
- **Do not place the keyfob for an extended period in an area where temperatures exceed 140°F (60°C).**

If a keyfob is lost or stolen, NISSAN recommends erasing the ID code of that keyfob. This will prevent the keyfob from unauthorized use to unlock the vehicle. For information regarding the erasing procedure, please contact a NISSAN dealer.

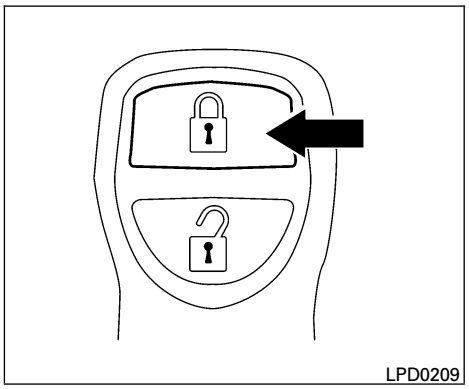

HOW TO USE REMOTE KEYLESS ENTRY SYSTEM

Locking doors

1. Close all windows.
2. Remove the key from the ignition switch.
3. Close the hood and all doors.
4. Push the button on the keyfob. All the doors lock. The hazard warning lights flash twice and the horn beeps once to indicate all doors are locked.
   - When the button is pushed with all doors locked, the hazard warning lights

☞ **REVIEW COPY—*2007 Versa*** *(vrs)*
Owners Manual—USA_English *(nna)*
03/06/06—arosenma ☜

flash twice and the horn beeps once as a reminder that the doors are already locked.

- If a door is open and you push the button, the doors will lock but the horn will not beep and the hazard lights will not flash.

The horn may or may not beep. Refer to “Silencing the horn beep feature” later in this section for details.

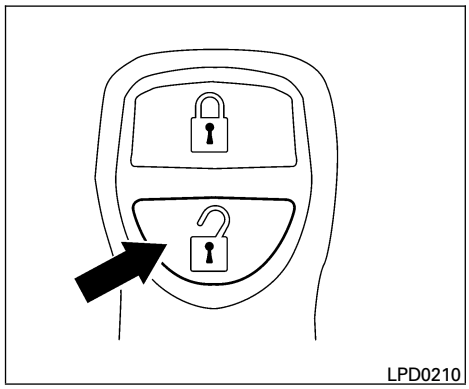

Unlocking doors

Push the button on the keyfob once.

- Only the driver’s door unlocks.
- The hazard warning lights flash once if all doors are completely closed with the ignition key in any position except the ON position.
- The interior light turns on and the light timer activates for 30 seconds when the interior light switch is in the DOOR position with the ignition key in any position except the ON position.

Push the button on the keyfob again within 5 seconds.

- All doors unlock.
- The hazard warning lights flash once if all doors are completely closed.

The interior lights can be turned off without waiting 30 seconds by inserting the key into the ignition and turning to the ON or START position, locking the doors with the keyfob or pushing the interior light switch to the OFF position.

Auto relock

When the button on the keyfob is pushed, all doors will lock automatically within 1 minute unless one of the following operations is performed:

- Any door is opened.
- A key is inserted into the ignition switch and the key is turned from OFF to ON.

Opening windows (if so equipped)

The keyfob allows you to open windows equipped with automatic operation simultaneously.

- To open the windows, press the button on the keyfob for **longer than 3 seconds** after all doors are unlocked.

The door windows will open while pressing the button on the keyfob.

☞ **REVIEW COPY—*2007 Versa*** *(vrs)*
Owners Manual—USA_English *(nna)*
03/06/06—arosenma ☜

The door windows cannot be closed by using the keyfob.

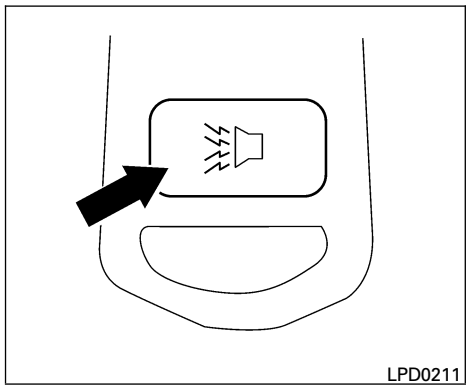

Using the panic alarm

If you are near your vehicle and feel threatened, you may activate the panic alarm to call attention by pushing and holding the button on the keyfob for **longer than 0.5 second.**

The panic alarm and headlights will stay on for 25 seconds.

The panic alarm stops when:

- it has run for 25 seconds, or
- any button is pushed on the keyfob.

Using the interior light

Push the button on the keyfob once to turn on the interior lights.

For additional information, refer to “Interior light” in the “Instruments and controls” section earlier in this manual.

☞ **REVIEW COPY—*2007 Versa*** *(vrs)*
Owners Manual—USA_English *(nna)*
03/06/06—arosenma ☜

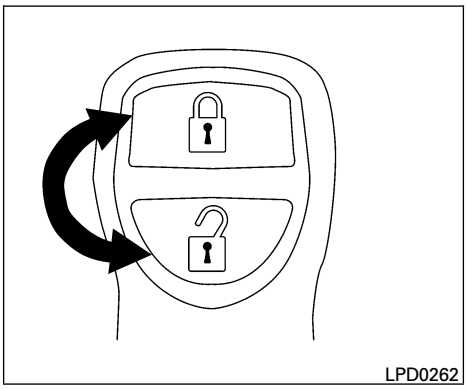

Silencing the horn beep feature

If desired, the horn beep feature can be deactivated using the keyfob.

To deactivate: Press and hold the 🔒 and 🔓 buttons **for at least 2 seconds.**

The hazard warning lights will flash three times to confirm that the horn beep feature has been deactivated.

To activate: Press and hold the 🔒 and 🔓 buttons **for at least 2 seconds once more.**

The hazard warning lights will flash once and the horn will sound once to confirm that the horn beep feature has been reactivated.

Deactivating the horn beep feature does not silence the horn if the alarm is triggered.

INTELLIGENT KEY SYSTEM (if so equipped)

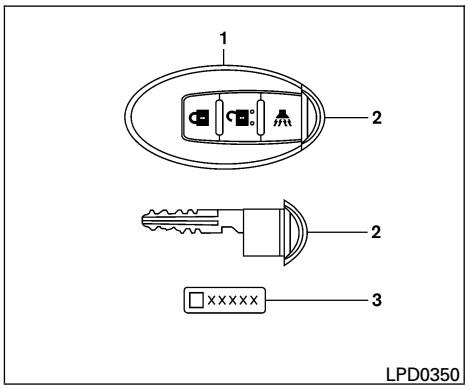

1. Two Intelligent Keys
2. Mechanical keys (inside Intelligent Keys)
3. Key number plate

⚠ WARNING

Radio waves could adversely affect electric medical equipment. Those who use a pacemaker should contact the electric medical equipment manufacturer for the possible influences before use.

The Intelligent Key system can operate all the door locks using the remote controller function or pushing the request switch on the vehicle without

☞ **REVIEW COPY—*2007 Versa*** *(vrs)*
Owners Manual—USA_English *(nna)*
03/06/06—arosenma ☜

taking the key out from a pocket or purse. The operating environment and/or conditions may affect the Intelligent Key system operation.

Be sure to read the following before using the Intelligent Key system.

⚠ CAUTION

- **Be sure to carry the Intelligent Key with you when operating the vehicle.**
- **Never leave the Intelligent Key in the vehicle when you leave the vehicle.**

The Intelligent Key is always communicating with the vehicle as it receives radio waves. The Intelligent Key system transmits weak radio waves. Environmental conditions may interfere with the operation of the Intelligent Key system under the following operating conditions.

- When operating near a location where strong radio waves are transmitted, such as a TV tower, power station and broadcasting station.
- When in possession of wireless equipment, such as a cellular telephone, transceiver, and CB radio.
- When the Intelligent Key is in contact with or covered by metallic materials.
- When any type of radio wave remote control is used nearby.
- When the Intelligent Key is placed near an electric appliance such as a personal computer.
- When the vehicle is parked near a parking meter.

In such cases, correct the operating conditions before using the Intelligent Key function or use the mechanical key.

Although the life of the battery varies depending on the operating conditions, the battery's life is approximately 2 years. If the battery is discharged, replace it with a new one.

When the Intelligent Key battery is low, the Intelligent Key system warning light (KEY) will blink green for about 30 seconds after the ignition switch is turned to the ON position.

Since the Intelligent Key is continuously receiving radio waves, if the key is left near equipment which transmits strong radio waves, such as signals from a TV and personal computer, the battery life may become shorter.

For information regarding replacement of a battery, see "Battery" in the "Maintenance and do-it-yourself" section.

As many as 4 Intelligent Keys can be registered and used with one vehicle. For information about the purchase and use of additional Intelligent Keys, contact a NISSAN dealer.

⚠ CAUTION

- **Do not allow the Intelligent Key, which contains electrical components, to come into contact with water or salt water. This could affect the system function.**
- **Do not drop the Intelligent Key.**
- **Do not strike the Intelligent Key sharply against another object.**
- **Do not change or modify the Intelligent Key.**
- **Wetting may damage the Intelligent Key. If the Intelligent Key gets wet, immediately wipe until it is completely dry.**
- **Do not place the Intelligent Key for an extended period in an area where temperatures exceed 140°F (60°C).**
- **Do not attach the Intelligent Key with a key holder that contains a magnet.**

☞ **REVIEW COPY—*2007 Versa*** *(vrs)*
Owners Manual—USA_English *(nna)*
03/06/06—arosenma ☜

- **Do not place the Intelligent Key near equipment that produces a magnetic field, such as a TV, audio equipment and personal computers.**

If an Intelligent Key is lost or stolen, NISSAN recommends erasing the ID code of that Intelligent Key from the vehicle. This may prevent the unauthorized use of the Intelligent Key to operate the vehicle. For information regarding the erasing procedure, contact a NISSAN dealer.

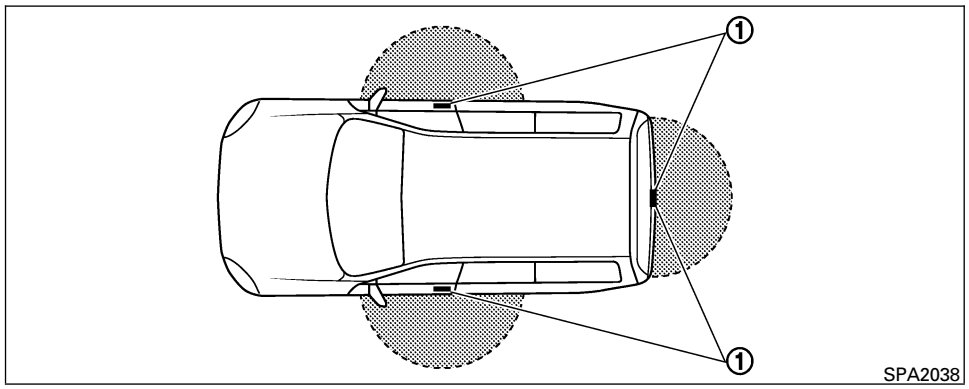

OPERATING RANGE

The Intelligent Key functions can only be used when the Intelligent Key is within the specified operating range from the request switch ①.

When the Intelligent Key battery is discharged or strong radio waves are present near the operating location, the Intelligent Key system's operating range becomes narrower, and the Intelligent Key may not function properly.

The operating range is within 31.50 in (80 cm) from each request switch ①.

If the Intelligent Key is too close to the door glass, handle or rear bumper, the request switches may not function.

When the Intelligent Key is within the operating range, it is possible for anyone, even someone who does not carry the Intelligent Key, to push the request switch to lock/unlock the doors.

☞ **REVIEW COPY—*2007 Versa*** *(vrs)*
Owners Manual—USA_English *(nna)*
03/06/06—arosenma ☜

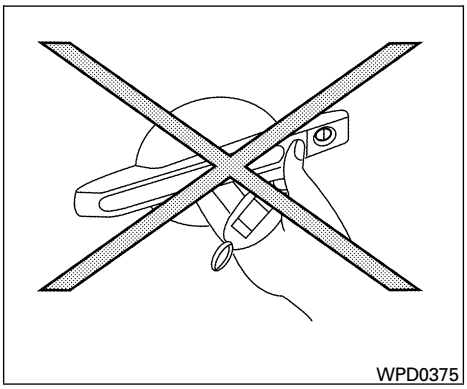

WPD0375

DOOR LOCKS/UNLOCKS PRECAUTION

- Do not push the door handle request switch with the Intelligent Key held in your hand as illustrated. The close distance to the door handle will cause the Intelligent Key system to have difficulty recognizing that the Intelligent Key is outside the vehicle.
- After locking with the door handle request switch, verify the doors are securely locked by testing them.
- To prevent the Intelligent Key from being left inside the vehicle, make sure you carry the key with you and then lock the doors.
- Do not pull the door handle before pushing the door handle request switch. The door will be unlocked but will not open. Release the door handle once and pull it again to open the door.

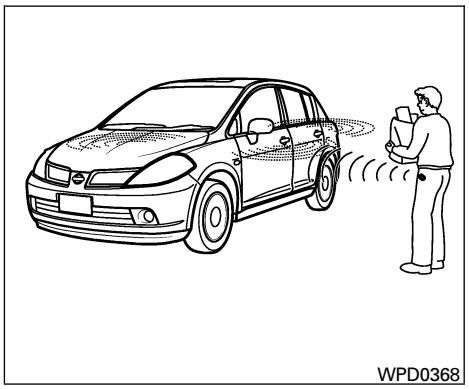

WPD0368

INTELLIGENT KEY OPERATION

You can lock or unlock the doors without taking the key out of your pocket or bag.

When you carry the Intelligent Key with you, you can lock or unlock all doors by pushing the door handle request switch or rear hatch request switch within the range of operation.

☞ **REVIEW COPY—*2007 Versa*** *(vrs)*
Owners Manual—USA_English *(nna)*
03/06/06—arosenma ☜

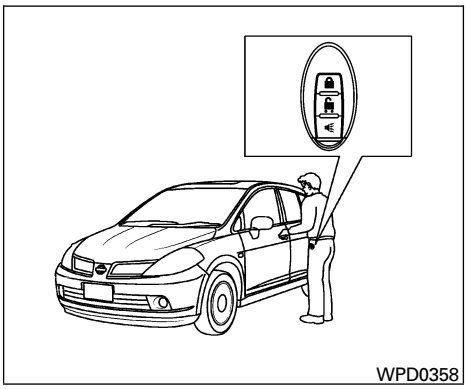
WPD0358

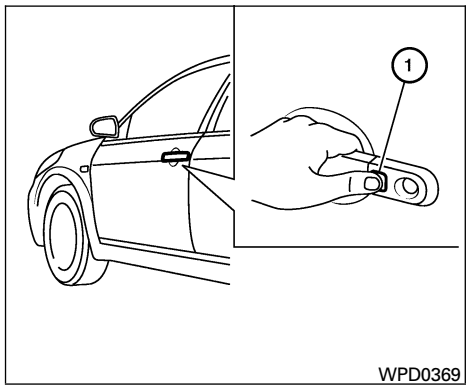

WPD0369

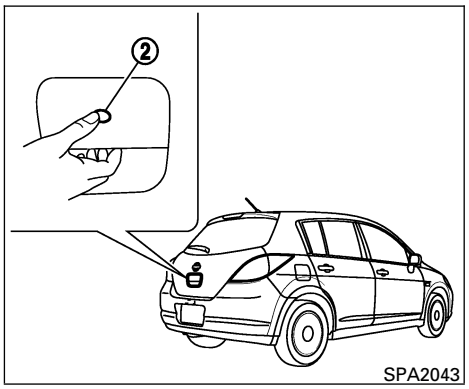

SPA2043

Locking doors

1. Turn the ignition switch to the LOCK position. (Remove the key if any key is in the ignition switch.)
2. Close all doors and the rear hatch.
3. Push any door handle request switch ① or the rear hatch request switch ② while carrying the Intelligent Key with you.
4. All doors and the rear hatch will lock.
5. The hazard warning lights flash twice and the outside buzzer sounds twice.

NOTE:

- Doors lock with the door handle request switch or rear hatch request switch while a mechanical key is in the ignition switch or the ignition switch is pushed in.
- Doors lock with the door handle request switch or the rear hatch request switch while the ignition switch is not in the LOCK position.
- Doors do not lock by pushing the door handle request switch or the rear hatch request switch while any door is open. However, doors lock with the mechanical key even if any door is open.
- Doors do not lock with the door handle request switch or the rear hatch request switch with the Intelligent Key inside the vehicle and a beep sounds to warn you. However, when an Intelligent Key is inside the vehicle, doors can be locked with another Intelligent Key.

⚠ CAUTION

- **After locking the doors using the request switch, make sure that the doors have been securely locked by operating the door handles or the rear hatch opener switch.**

☞ **REVIEW COPY—*2007 Versa*** *(vrs)*
Owners Manual—USA_English *(nna)*
03/06/06—arosenma ☜

- **When locking the doors using the request switch, make sure to have the Intelligent Key in your possession before operating the request switch to prevent the Intelligent Key from being left in the vehicle.**
- **The request switch is operational only when the Intelligent Key has been detected by the Intelligent Key system.**

Lockout protection

To prevent the Intelligent Key from being accidentally locked in the vehicle, lockout protection is equipped with the Intelligent Key system.

When the driver's side door is open, the doors are locked, and then the Intelligent Key is put inside the vehicle and all the doors are closed; the lock will automatically unlock and the door buzzer sounds.

⚠ CAUTION

The lockout protection may not function under the following conditions:

- **When the Intelligent Key is placed on top of the instrument panel.**
- **When the Intelligent Key is placed on top of the rear parcel.**
- **When the Intelligent Key is placed on the tonneau cover.**
- **When the Intelligent Key is placed inside the glove box or a storage bin.**
- **When the Intelligent Key is placed inside the door pockets.**
- **When the Intelligent Key is placed on or under the spare tire area.**
- **When the Intelligent Key is placed inside or near metallic materials.**

The lockout protection may function when the Intelligent Key is outside the vehicle but it is too close to the vehicle.

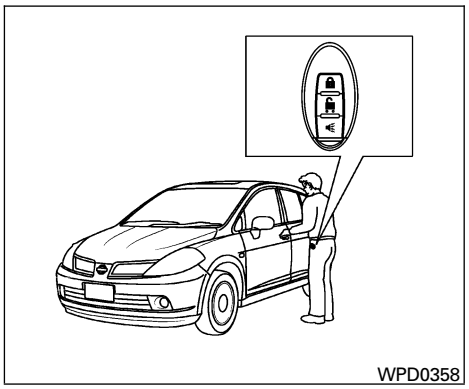

Unlocking doors

1. Carry the Intelligent Key.
2. Push the door handle request switch ① or the rear hatch request switch ②.
3. The hazard warning lights flash once and the outside buzzer sounds once.
4. Push the door handle request switch ① again within 1 minute to unlock all doors and the rear hatch.

If a door handle is pulled while unlocking the doors, that door may not be unlocked. Returning the door handle to its original position will unlock the door. If the door does not unlock after return-

☞ **REVIEW COPY—*2007 Versa*** *(vrs)*
Owners Manual—USA_English *(nna)*
03/06/06—arosenma ☜

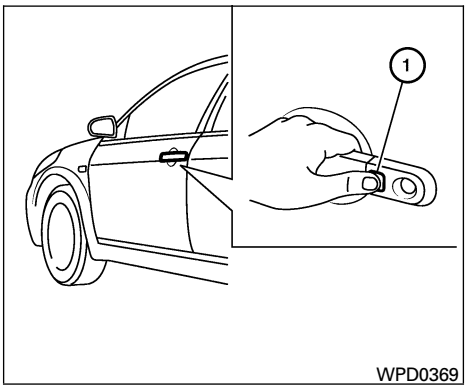

ing the door handle, push the door handle request switch to unlock the door.

All doors and the rear hatch will be locked automatically unless one of the following operations is performed within 1 minute after pushing the request switch.

- Opening any doors or the rear hatch.
- Pushing the ignition switch.
- Inserting the mechanical key into the ignition switch.

The interior light timer illuminates for 30 seconds when a door is unlocked and the room light switch is in the DOOR position.

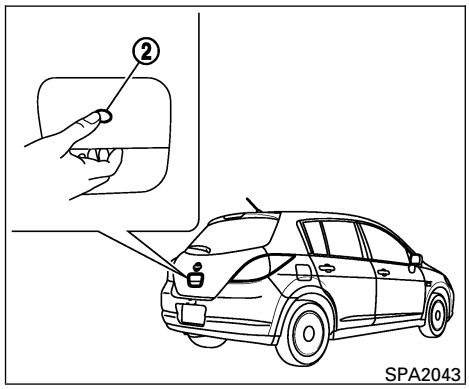

The interior light can be turned off without waiting for 30 seconds by performing one of the following operations.

- Turning the ignition switch to the ON position.
- Locking the doors with the remote controller.
- Switching the room light switch to the OFF position.

HOW TO USE THE REMOTE KEYLESS ENTRY FUNCTION

The remote keyless entry function can operate all door locks using the remote keyless function of the Intelligent Key. The remote keyless function can operate at a distance of 33 ft (10 m) away from the vehicle. The operating distance depends upon the conditions around the vehicle.

The remote keyless entry function will not function under the following conditions:

- When the Intelligent Key is not within the operational range.
- When the doors or the rear hatch are open or not closed securely.
- When the Intelligent Key battery is discharged.

⚠ CAUTION

When locking the doors using the Intelligent Key, be sure not to leave the key in the vehicle.

☞ **REVIEW COPY—*2007 Versa*** *(vrs)*
Owners Manual—USA_English *(nna)*
03/06/06—arosenma ☜

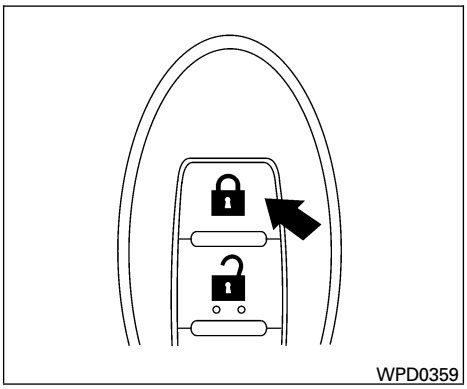

Locking doors

1. Turn the ignition switch to the LOCK position.
2. Close all doors and the rear hatch.
3. Push the button on the Intelligent Key.
4. The hazard warning lights flash twice, the outside buzzer sounds twice, and the horn beeps once.
5. All doors and the rear hatch will be locked.

NOTE:

- Doors will lock with the Intelligent Key while the ignition switch is in the ACC or ON position.
- Doors will not lock with the Intelligent Key while any door is open.

CAUTION

After locking the doors using the Intelligent Key, be sure that the doors have been securely locked by operating the door handles.

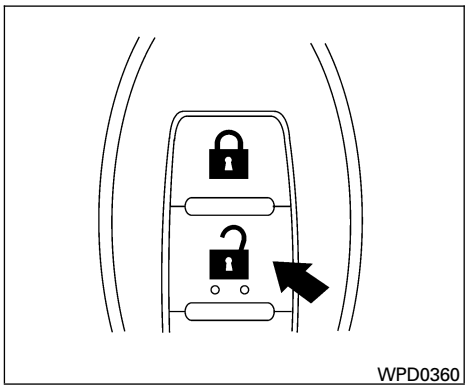

Unlocking doors

1. Push the button on the Intelligent Key.
2. The hazard warning lights flash once and the outside buzzer sounds once.
3. Push the button again within 1 minute to unlock all doors and the rear hatch.

All doors and the rear hatch will be locked automatically unless one of the following operations is performed within 1 minute after pushing the button.

- Opening any doors or the rear hatch.
- Pushing the ignition switch.

☞ **REVIEW COPY—*2007 Versa*** *(vrs)*
Owners Manual—USA_English *(nna)*
03/06/06—arosenma ☜

- Inserting the mechanical key into the ignition switch.

The interior light illuminates for 30 seconds when a door is unlocked and the room light switch is in the DOOR position.

The light can be turned off without waiting for 30 seconds by performing one of the following operations.

- Turning the ignition switch to the ON position.
- Locking the doors with the remote controller.
- Switching the room light switch to the OFF position.

Opening windows (if so equipped)

The Intelligent Key allows you to open windows equipped with automatic operation simultaneously.

- To open the windows, press the button on the keyfob for **longer than 3 seconds** after all doors are unlocked.

The door windows will open while pressing the button on the keyfob.

The door windows cannot be closed by using the keyfob.

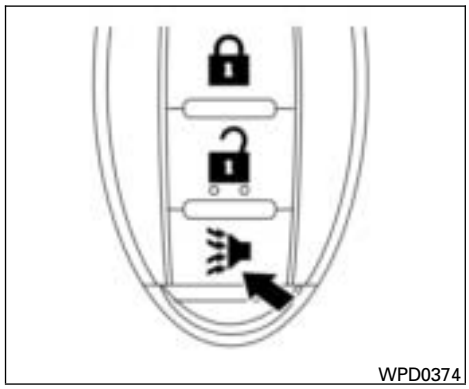

Using the panic alarm

If you are near your vehicle and feel threatened, you may activate the panic alarm to call attention by pushing and holding the button on the Intelligent Key for **longer than 0.5 second.**

The panic alarm and headlights will stay on for 25 seconds.

The panic alarm stops when:

- it has run for 25 seconds, or
- any button is pushed on the Intelligent Key.

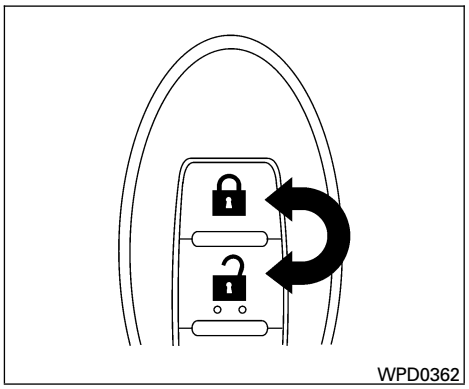

Silencing the horn beep feature

If desired, the horn beep feature can be deactivated using the Intelligent Key.

To deactivate: Press and hold the and buttons **for at least 2 seconds.**

The hazard warning lights will flash three times to confirm that the horn beep feature has been deactivated.

To activate: Press and hold the and buttons **for at least 2 seconds once more.**

☞ **REVIEW COPY—*2007 Versa*** *(vrs)*
Owners Manual—USA_English *(nna)*
03/06/06—arosenma ☜

The hazard warning lights will flash once and the horn will sound once to confirm that the horn beep feature has been reactivated.

Deactivating the horn beep feature does not silence the horn if the alarm is triggered.

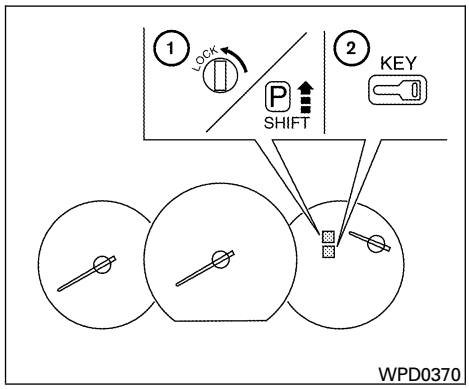

① Intelligent Key lock warning light (M/T models) or P position selecting warning light (CVT models)

② Intelligent Key system warning light

WARNING LIGHTS AND AUDIBLE REMINDERS

The Intelligent Key system is equipped with a function that is designed to minimize improper operations and to help prevent the vehicle from being stolen. The warning buzzer sounds and the warning light illuminates when improper operations are detected.

⚠ CAUTION

When the buzzer sounds and the warning light illuminates, be sure to check both the vehicle and the Intelligent Key.

WARNING SIGNALS

To help prevent the vehicle from moving unexpectedly by erroneous operation of the Intelligent Key or to help prevent the vehicle from being stolen, a chime or buzzer sounds from inside and outside the vehicle and a warning light comes on in the instrument panel.

When a chime or beep sounds or the warning light comes on, be sure to check the vehicle and the Intelligent Key.

Audible reminder and warning when locking the doors

When the chime or buzzer sounds from inside and outside the vehicle, check for the following:

- The ignition switch is turned to the LOCK position.
- The Intelligent Key is not left inside the vehicle.
- The selector lever is in the P position.

☞ **REVIEW COPY—*2007 Versa*** *(vrs)*
Owners Manual—USA_English *(nna)*
03/06/06—arosenma ☜

Audible reminder and warning when the engine stops

When the P position selecting warning light (P SHIFT) (CVT models) in the instrument panel blinks in red:

- Make sure the selector lever is in the P position.

When the chime sounds intermittently:

- Make sure the selector lever is in the P position and the ignition switch is turned to the LOCK position.

If the chime sounds continuously when the driver's door is opened, check the following:

- The selector lever is in the P position and the ignition switch is turned to the LOCK position.
- The mechanical key is not inserted into the ignition switch.
- The warning chime may stop when one of the following is performed.
  - Returning the ignition switch to the LOCK position.
  - Removing the mechanical key.
  - Closing the doors.

When the Intelligent Key lock warning light ( ) (M/T models) in the instrument panel blinks:

- Make sure the selector lever is in the P position.
- Make sure the ignition switch is in the LOCK position.

Alarm and warning when the engine starts

When the Intelligent Key system warning light (KEY) blinks red and the outside buzzer sounds, make sure the Intelligent Key is inside the vehicle.

Warning for low battery power

When the Intelligent Key battery is low, the Intelligent Key system warning light (KEY) will blink green for about 30 seconds after the ignition switch is turn to the ON position. This warning is to let you know that the battery of the Intelligent Key will run down soon. Replace it with a new one. Refer to the "Battery replacement" in the "Maintenance and do-it-yourself" section

NISSAN recommends replacing the battery at a NISSAN dealer.

Preventing the Intelligent Key from being left in the vehicle

If you lock all doors using the power door lock switch with the Intelligent Key in the vehicle, all of the doors unlock immediately and the buzzer will warn you when the door is closed.

☞ **REVIEW COPY—*2007 Versa*** *(vrs)*
Owners Manual—USA_English *(nna)*
03/06/06—arosenma ☜

TROUBLESHOOTING GUIDE

Symptom		Possible Cause	Remedy
When pushing the door handle request switch	The front door beep sounds for approximately 2 seconds.	The doors cannot be locked.	Take out the Intelligent Key from the vehicle and push the door handle request switch.
When closing the doors	The front door beep sounds for approximately 10 seconds.	The ignition knob is not turned to LOCK position.	Turn the ignition knob to LOCK.
	The key warning light in the instrument panel blinks in red and the front door warning beep sounds for approximately 3 seconds.	The Intelligent Key is not in the vehicle.	Be sure to carry the Intelligent Key with you.
	The front door beep sounds for approximately 3 seconds and all doors unlock.	The Intelligent Key is left in the vehicle.	Take out the Intelligent Key from the vehicle and close the door.
When opening the driver's door	A warning chime sounds continuously.	The ignition knob is not in LOCK position, or the mechanical key is inserted into the ignition knob.	Turn the ignition knob to LOCK.
			Remove the mechanical key or valet key form the ignition knob.
When stopping the engine	The P position warning light in the instrument panel blinks in red.	The selector lever is not in the P (Park) position.	Make sure that the selector lever is in the P (Park) position and turn the ignition knob to LOCK.
When turning the ignition knob	The warning chime sounds	The ignition knob is not turned to LOCK.	Turn the ignition knob to LOCK.
When starting the engine	The key warning light in the instrument panel blinks in green.	The battery charge is low.	Replace the battery to new one. See "Battery replacement" in the "Maintenance and do-it-yourself" section.
When turning the ignition switch	A warning chime sounds continuously.	The ignition switch is not turned to the LOCK position.	Turn the ignition switch to the LOCK position.
	A warning chime sounds continuously and the Intelligent Key lock warning light blinks.		
When pushing the ignition switch	The Intelligent Key system warning light in the instrument panel illuminates red.	The Intelligent Key is not in the vehicle.	If the Intelligent Key system warning light illuminates red even while you are carrying the Intelligent Key, the battery is completely discharged. Replace the battery to new one. See "Battery replacement" in the "Maintenance and do-it-yourself" section.

☞ **REVIEW COPY—*2007 Versa*** *(vrs)*
Owners Manual—USA_English *(nna)*
03/06/06—arosenma ☜

HOOD

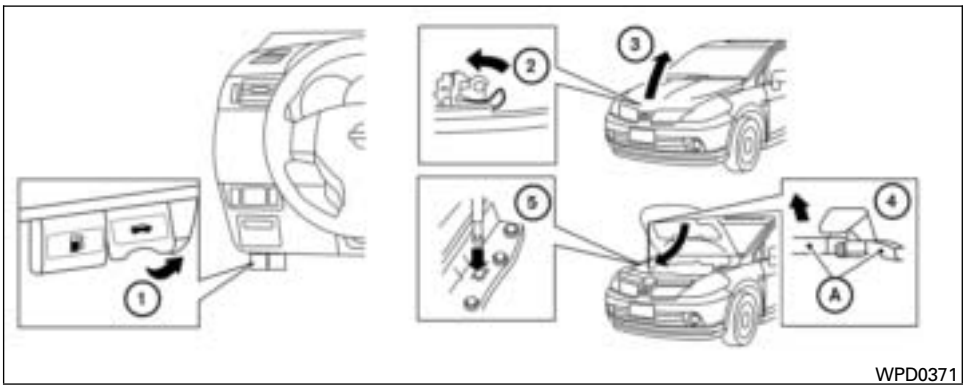

1. Pull the hood lock release handle ① located below the instrument panel until the hood springs up slightly.
2. Locate the lever ② in between the hood and grille and push the lever sideways with your fingertips.
3. Raise the hood ③.
4. Remove the support rod ④ and insert it into the slot ⑤.

Hold the coated parts Ⓐ when removing or resetting the support rod. Avoid direct contact with the metal parts, as they may be hot immediately after the engine has been stopped.

When closing the hood, first return the support rod to its original position. Slowly move the hood down to latch the lock. Push the hood down to lock the hood securely into place.

⚠WARNING

- **Make sure the hood is completely closed and latched before driving. Failure to do so could cause the hood to fly open and result in an accident.**
- **If you see steam or smoke coming from the engine compartment, to avoid injury do not open the hood.**

☞ **REVIEW COPY—*2007 Versa*** *(vrs)*
Owners Manual—USA_English *(nna)*
03/06/06—arosenma ☜

REAR HATCH

⚠ WARNING

The rear hatch must be closed securely before driving. An open rear hatch could allow dangerous exhaust gases to be drawn inside the vehicle.

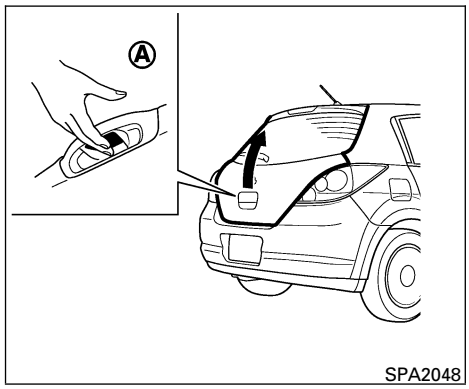

OPENING THE REAR HATCH

To open the rear hatch, unlock it with one of the following operations, then push the opener switch Ⓐ.

- Push the power door lock switch to the unlock position.
- Unlock all doors using the key.
- Push the button on the remote controller (if equipped) twice. See "Remote keyless entry system" earlier in this section.
- Push the rear hatch request switch or door handle request switch (if equipped) twice. See "Intelligent key system" earlier in this section.
- Push the button on the Intelligent Key (if equipped) twice. See "Intelligent key system" earlier in this section.

☞ **REVIEW COPY—*2007 Versa*** *(vrs)*
Owners Manual—USA_English *(nna)*
03/06/06—arosenma ☜

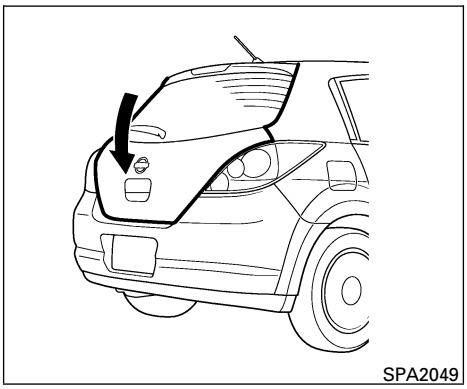

To close the rear hatch, push the rear hatch down until it securely locks.

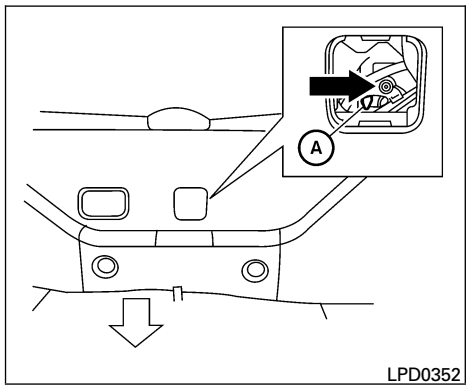

REAR HATCH RELEASE

The rear hatch release mechanism allows the rear hatch to be opened in the event of a discharged battery.

To release the rear hatch from the inside of the vehicle, perform the following operations:

1. Fold the rear seats down. See “Folding rear seat” in the “Safety — seats, seat belts and supplemental restraint system” section.
2. Put a hand or a suitable tool in the underside of the rear hatch to access the release lever Ⓐ. Move the release lever to the right. The rear hatch will be unlatched.
3. Push the rear hatch up to open.

NOTE:

If you had to open the rear hatch using this lever, have your vehicle checked by a NISSAN dealer as soon as possible.

☞ **REVIEW COPY—*2007 Versa*** *(vrs)*
Owners Manual—USA_English *(nna)*
03/06/06—arosenma ☜

FUEL-FILLER DOOR

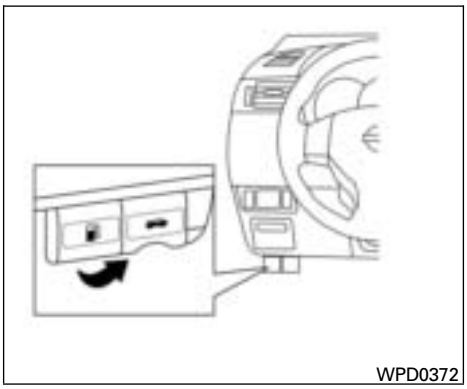

OPENER OPERATION

The fuel-filler door release is located below the instrument panel. To open the fuel-filler door, pull the release. To lock, close the fuel-filler door securely.

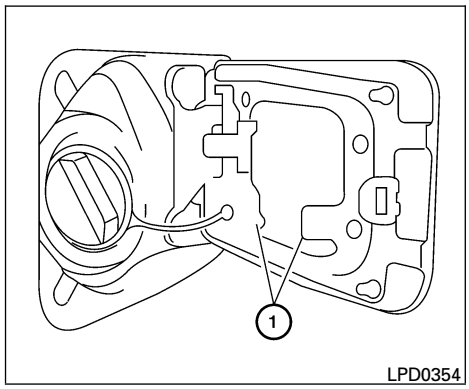

FUEL-FILLER CAP

The fuel-filler cap is a ratcheting type. Turn the cap counterclockwise to remove. To tighten, turn the cap clockwise until ratcheting clicks are heard.

Put the fuel-filler cap on the cap holder ① while refueling.

⚠ WARNING

- **Gasoline is extremely flammable and highly explosive under certain conditions. You could be burned or seriously injured if it is misused or mishandled. Always stop the engine and do not smoke or allow open flames or sparks near the vehicle when refueling.**
- **Fuel may be under pressure. Turn the cap a third of a turn, and wait for any "hissing" sound to stop to prevent fuel from spraying out and possibly causing personal injury. Then remove the cap.**
- **Do not attempt to top off the fuel tank after the fuel pump nozzle shuts off automatically. Continued refueling may cause fuel overflow, resulting in fuel spray and possibly a fire.**
- **Use only an original equipment type fuel-filler cap as a replacement. It has a built-in safety valve needed for proper operation of the fuel system and emission control system. An incorrect cap can result in a serious malfunction and possible injury. It could also cause the malfunction indicator light to come on.**
- **Never pour fuel into the throttle body to attempt to start your vehicle.**

☞ **REVIEW COPY—*2007 Versa*** *(vrs)*
Owners Manual—USA_English *(nna)*
03/06/06—arosenma ☜

- **Do not fill a portable fuel container in the vehicle or trailer. Static electricity can cause an explosion of flammable liquid, vapor or gas in any vehicle or trailer. To reduce the risk of serious injury or death when filling portable fuel containers:**
  - **Always place the container on the ground when filling.**
  - **Do not use electronic devices when filling.**
  - **Keep the pump nozzle in contact with the container while you are filling it.**
  - **Use only approved portable fuel containers for flammable liquid.**

⚠ CAUTION

- **If fuel is spilled on the vehicle body, flush it away with water to avoid paint damage.**

- **Tighten until the fuel-filler cap clicks. Failure to tighten the fuel-filler cap properly may cause the SERVICE ENGINE SOON malfunction indicator light (MIL) to illuminate. If the SERVICE ENGINE SOON light illuminates because the fuel-filler cap is loose or missing, tighten or install the cap and continue to drive the vehicle. The SERVICE ENGINE SOON light should turn off after a few driving trips. If the SERVICE ENGINE SOON light does not turn off after a few driving trips, have the vehicle inspected by a NISSAN dealer.**
- **For additional information, see the "Malfunction indicator light (MIL)" in the "Instruments and Controls" section earlier in this manual.**

STEERING WHEEL

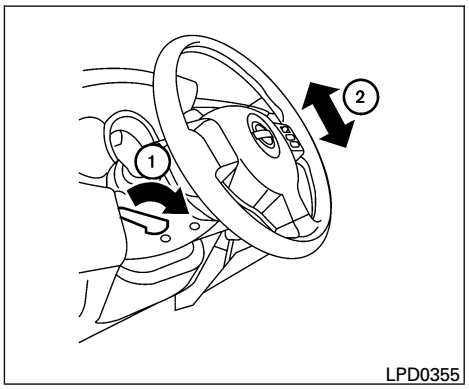

TILT OPERATION

Push the lock lever ① down and adjust the steering wheel up or down ② to the desired position.

Pull the lock lever up to lock the steering wheel in place.

⚠ WARNING

Do not adjust the steering wheel while driving. You could lose control of your vehicle and cause an accident.

☞ **REVIEW COPY—*2007 Versa*** *(vrs)*
Owners Manual—USA_English *(nna)*
03/06/06—arosenma ☜

SUN VISORS

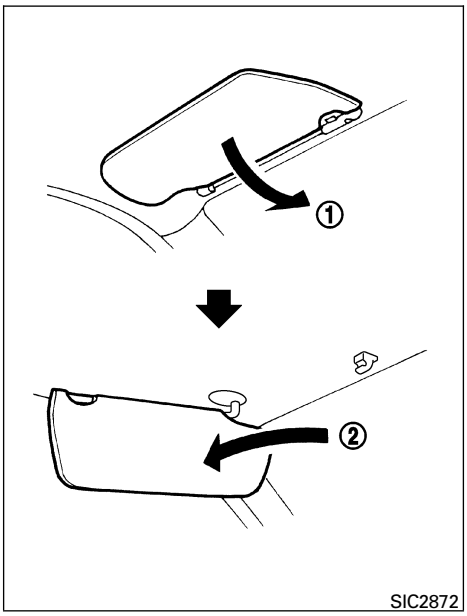

To block out glare from the front, swing down the sun visor ①.

To block glare from the side, remove the sun visor from the center mount and swing it to the side ②.

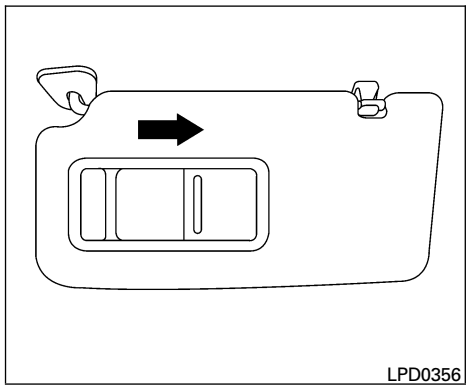

VANITY MIRRORS (if so equipped)

To access the vanity mirror, pull the sun visor down and slide the mirror cover open. Some vanity mirrors are illuminated and turn on when the mirror cover is open.

MIRRORS

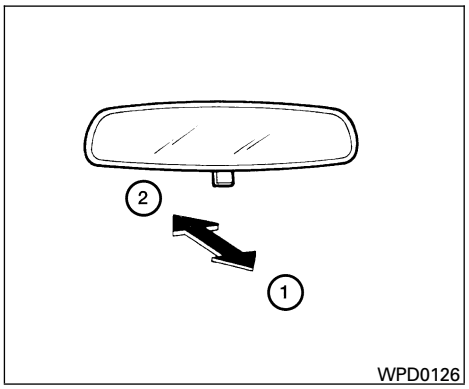

REARVIEW MIRROR

The night position ① reduces glare from the headlights of vehicles behind you at night.

Use the day position ② when driving in daylight hours.

⚠ WARNING

Use the night position only when necessary, because it reduces rear view clarity.

☞ **REVIEW COPY—*2007 Versa*** *(vrs)*
Owners Manual—USA_English *(nna)*
03/06/06—arosenma ☜

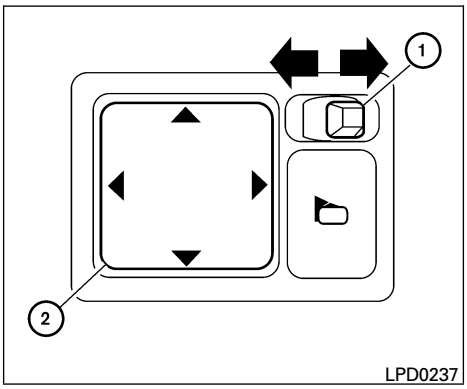

OUTSIDE MIRRORS

The outside mirror remote control will operate only when the ignition switch is in the ACC or ON position.

Move the small switch ① to select the right or left mirror. Adjust each mirror to the desired position using the large switch ②.

⚠ WARNING

- **Objects viewed in the outside mirror on the passenger side are closer than they appear. Be careful when moving to the right. Using only this mirror could cause an accident. Use the inside mirror or glance over your shoulder to properly judge distances to other objects.**
- **Do not adjust the mirrors while driving. You could lose control of your vehicle and cause an accident.**

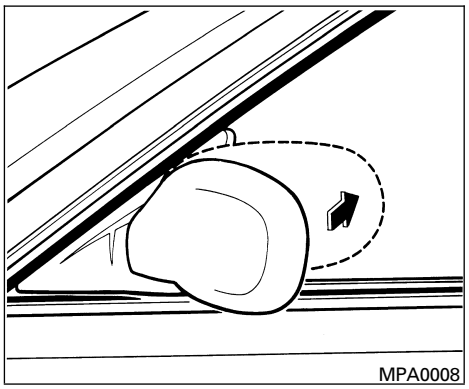

Foldable outside mirrors

Push the mirrors backward to fold them.

Heated mirrors (Canada only)

Some outside mirrors can be heated to defrost, defog, or de-ice for improved visibility. Press the rear window defroster switch to activate the heating function. Press the switch again to deactivate, or the heating function will automatically turn off after approximately 15 minutes.

☞ **REVIEW COPY—*2007 Versa*** *(vrs)*
Owners Manual—USA_English *(nna)*
03/06/06—arosenma ☜

4 Heater, air conditioner, audio and phone systems

Ventilators 4-2
Heater and air conditioner (manual) 4-3
Controls 4-3
Heater operation 4-4
Air conditioner operation 4-5
Air flow charts 4-6
Servicing air conditioner 4-9
Audio system 4-10
Radio 4-10
FM radio reception 4-10
AM radio reception 4-10
Satellite radio reception (if so equipped) 4-10
Audio operation precautions 4-11
FM/AM radio with compact disc (CD) player 4-16
FM/AM/SAT radio with compact disc (CD) changer 4-20
CD care and cleaning 4-25
Steering wheel switch for audio control (if so equipped) 4-25
Antenna 4-26
Car phone or CB radio 4-27
Bluetooth® Hands-Free Phone System (if so equipped) 4-27
Using the system 4-29
Control buttons 4-31
Getting started 4-31
List of voice commands 4-33
Speaker adaptation (SA) mode 4-38
Troubleshooting guide 4-39

☞ **REVIEW COPY—*2007 Versa*** *(vrs)*
Owners Manual—USA_English *(nna)*
03/06/06—arosenma ☜

VENTILATORS

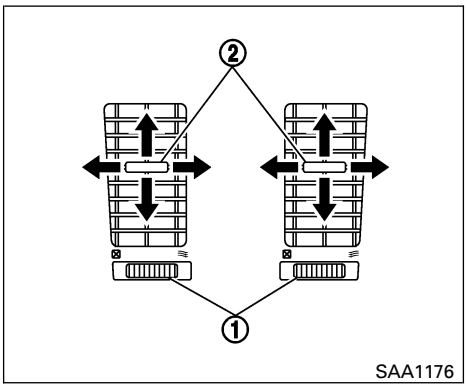

center

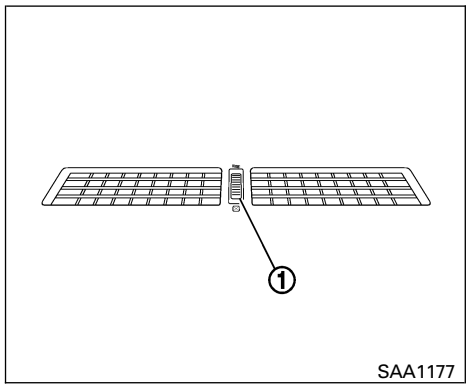

center upper

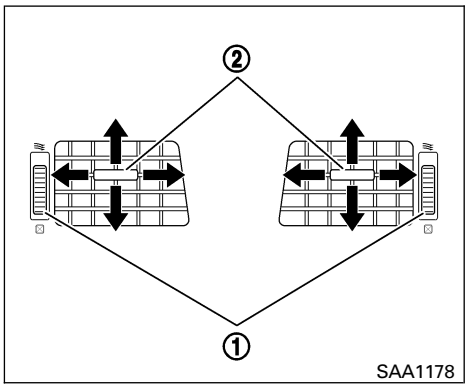

sides

Adjust air flow open/close ①

Adjust air flow direction ②

☞ **REVIEW COPY—*2007 Versa*** *(vrs)*
Owners Manual—USA_English *(nna)*
03/06/06—arosenma ☜

HEATER AND AIR CONDITIONER (manual)

⚠ WARNING

- **The air conditioner cooling function operates only when the engine is running.**
- **Do not leave children or adults who would normally require the assistance of others alone in your vehicle. Pets should also not be left alone. They could accidentally injure themselves or others through inadvertent operation of the vehicle. Also, on hot, sunny days, temperatures in a closed vehicle could quickly become high enough to cause severe or possibly fatal injuries to people or animals.**
- **Do not use the recirculation mode for long periods as it may cause the interior air to become stale and the windows to fog up.**

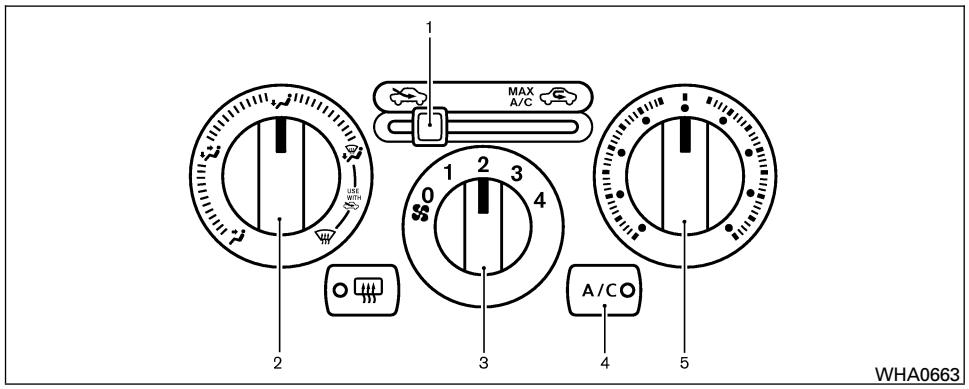

1. Air intake lever (Outside air circulation/ Air recirculation)
2. Air flow control dial
3. Fan control dial
4. Air conditioner button
5. Temperature control dial

CONTROLS

Fan control dial

The fan control dial turns the fan on and off, and controls fan speed.

Air flow control dial

The air flow control dial allows you to select the air flow outlets.

- — Air flows from center and side ventilators.
- — Air flows from center and side ventilators and foot outlets.
- — Air flows mainly from foot outlets.
- — Air flows from defroster outlets and foot outlets.
- — Air flows mainly from defroster outlets.

☞ **REVIEW COPY—*2007 Versa*** *(vrs)*
Owners Manual—USA_English *(nna)*
03/06/06—arosenma ☜

Temperature control dial

The temperature control dial allows you to adjust the temperature of the outlet air. To lower the temperature, turn the dial to the left. To increase the temperature, turn the dial to the right.

Fresh air

Move the air intake lever to the position. The air flow is drawn from outside the vehicle.

Air recirculation

Move the air intake lever to the position to recirculate air inside the vehicle.

Use the selection:

- when driving on a dusty road.
- to prevent traffic fumes from entering passenger compartment.
- for maximum cooling when using the air conditioner.

A/C Air conditioner button

Start the engine, turn the fan control dial to the desired position and push the A/C button to turn on the air conditioner. The indicator light comes on when the air conditioner is operating. To turn off the air conditioner, push the A/C button again.

The air conditioner cooling function operates only when the engine is running.

Rear window defroster switch

For more information about the rear window defroster switch, see "Rear window defroster switch" in the "Instruments and controls" section of this manual.

HEATER OPERATION

Heating

This mode is used to direct heated air to the foot outlets. Some air also flows from the defrost outlets.

1. Move the air intake lever to the position for normal heating.
2. Turn the air flow control dial to the position.
3. Turn the fan control dial to the desired position.
4. Turn the temperature control dial to the desired position between the middle and the hot position.

Ventilation

This mode directs outside air to the side and center ventilators.

1. Move the air intake lever to the position.
2. Turn the air flow control dial to the position.
3. Turn the fan control dial to the desired position.
4. Turn the temperature control dial to the desired position.

Defrosting or defogging

This mode directs the air to the defrost outlets to defrost/defog the windows.

1. Move the air intake lever to the position.
2. Turn the air flow control dial to the position.
3. Turn the fan control dial to the desired position.
4. Turn the temperature control dial to the desired position between the middle and the hot position.

- To quickly remove ice or fog from the windows, turn the fan control dial to the maximum position and the temperature control dial to the full HOT position.

☞ **REVIEW COPY—*2007 Versa*** *(vrs)*
Owners Manual—USA_English *(nna)*
03/06/06—arosenma ☜

When the position is selected, A/C will be automatically turned on (but the indicator light will remain off). This will dehumidify the air and help to defog the windows. When the air flow control dial is changed to a different position, the A/C will be turned off.

Bi-level heating

This mode directs cooler air from the side and center vents and warmer air from the floor outlets. When the temperature control dial is moved to the full hot or full cool position, the air between the vents and the floor outlets is the same temperature.

1. Move the air intake lever to position.
2. Turn the air flow control dial to the position.
3. Turn the fan control dial to the desired position.
4. Turn the temperature control dial to the desired position.

Heating and defogging

This mode heats the interior and defogs the windshield.

1. Move the air intake lever to the position.
2. Turn the air flow control dial to the position.
3. Turn the fan control dial to the desired position.
4. Turn the temperature control dial to the desired position between the middle and the hot position.

When the position is selected, A/C will be automatically turned on (but the indicator light will remain off). This will dehumidify the air and help to defog the windows. When the air flow control dial is changed to a different position, the A/C will be turned off.

Operating tips

Clear snow and ice from the wiper blades and air inlet in front of the windshield. This improves heater operation.

AIR CONDITIONER OPERATION

Start the engine, turn the fan control dial to the desired position, and push the A/C button to activate the air conditioner. When the air conditioner is on, cooling and dehumidifying functions are added to the heater operation.

The air conditioner cooling function operates only when the engine is running.

Cooling

This mode is used to cool and dehumidify the air.

1. Move the air intake lever to the position.
2. Turn the air flow control dial to the position.
3. Turn the fan control dial to the desired position.
4. Push the A/C button. The indicator light comes on.
5. Turn the temperature control dial to the desired position.

- For quick cooling when the outside temperature is high, move air intake lever to the position. Be sure to return to the position for normal cooling.

Dehumidified heating

This mode is used to heat and dehumidify the air.

1. Move the air intake lever to the position.
2. Turn the air flow control dial to the position.
3. Turn the fan control dial to the desired position.

☞ **REVIEW COPY—*2007 Versa*** *(vrs)*
Owners Manual—USA_English *(nna)*
03/06/06—arosenma ☜

4. Push the A/C button. The indicator light comes on.
5. Turn the temperature control dial to the desired position.

Dehumidified defogging

This mode is used to defog the windows and dehumidify the air.

1. Move the air intake lever to the position.
2. Turn the air flow control dial to the position.
3. Turn the fan control dial to the desired position.
4. Push on the A/C button. The indicator light comes on.
5. Turn the temperature control dial to the desired position.

Operating tips

- Keep the windows and sunroof closed while the air conditioner is in operation.
- After parking in the sun, drive for 2 or 3 minutes with the windows open to vent hot air from the passenger compartment. Then, close the windows. This allows the air conditioner to cool the interior more quickly.
- **The air conditioning system should be operated for approximately 10 minutes at least once a month. This helps prevent damage to the system due to lack of lubrication.**
- **If the engine coolant temperature gauge indicates engine coolant temperature over the normal range, turn the air conditioner off. See "If your vehicle overheats" in the "In case of emergency" section of this manual.**

AIR FLOW CHARTS

The following charts show the button and dial positions for **MAXIMUM AND QUICK** heating, cooling or defrosting. **The air recirculation lever should always be in the OFF position for heating and defrosting.**

☞ **REVIEW COPY—*2007 Versa*** *(vrs)*
Owners Manual—USA_English *(nna)*
03/07/06—cathy ☜

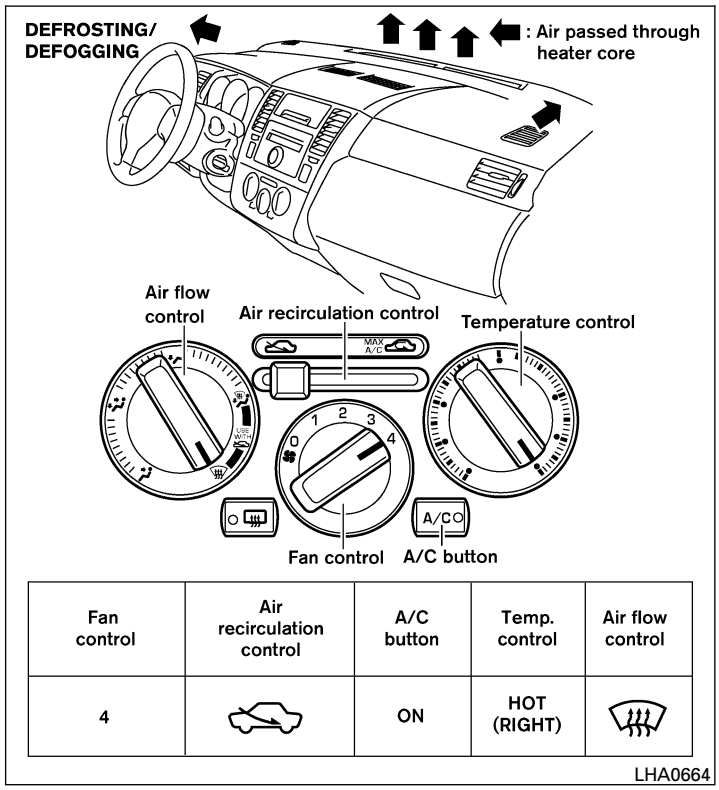

Fan control	Air recirculation control	A/C button	Temp. control	Air flow control
4		ON	HOT (RIGHT)	

LHA0664

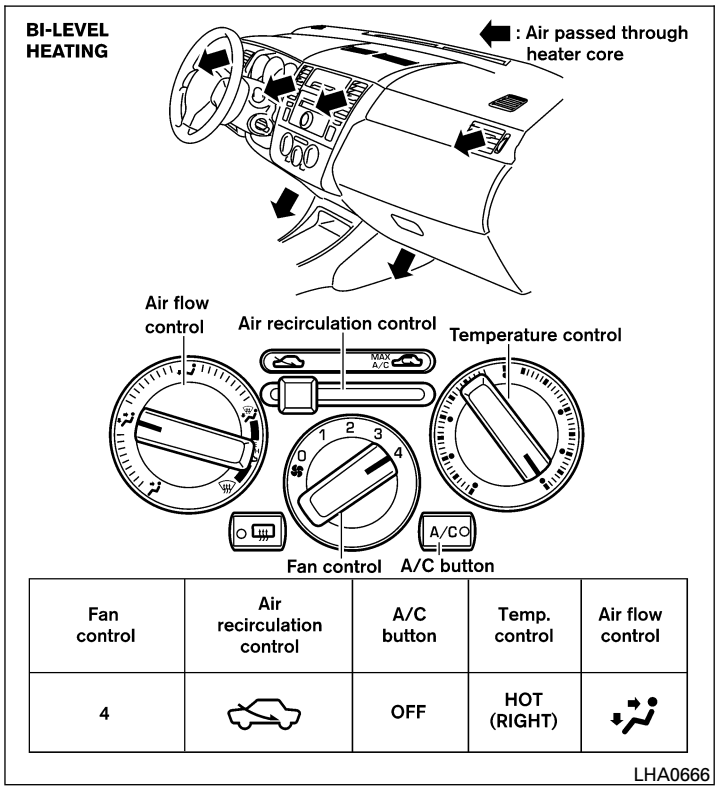

Fan control	Air recirculation control	A/C button	Temp. control	Air flow control
4		OFF	HOT (RIGHT)	

LHA0666

☞ **REVIEW COPY—*2007 Versa*** *(vrs)*
Owners Manual—USA_English *(nna)*
03/06/06—arosenma ☜

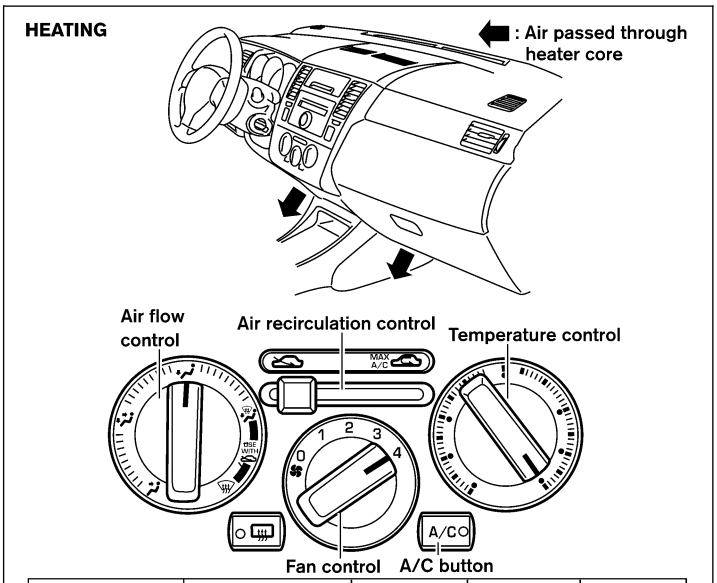

Fan control	Air recirculation control	A/C button	Temp. control	Air flow control
4		OFF	HOT (RIGHT)	

LHA0667

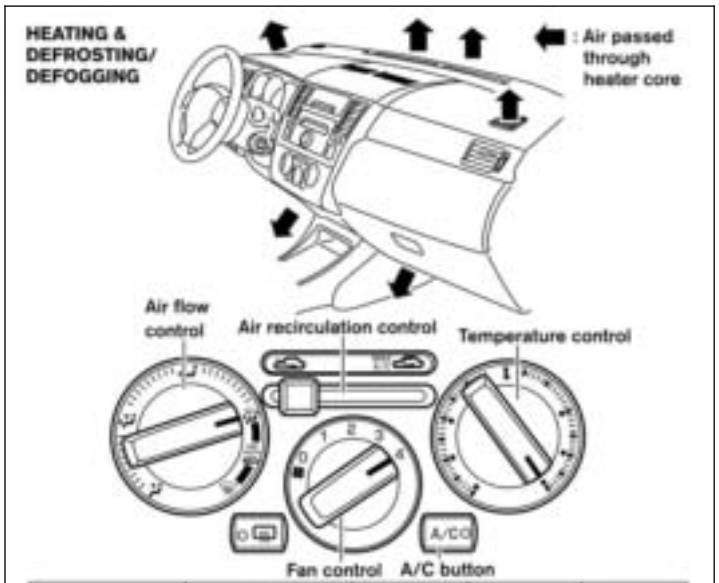

Fan control	Air recirculation control	A/C button	Temp. control	Air flow control
4		ON	HOT (RIGHT)	

WHA0685

☞ **REVIEW COPY—*2007 Versa*** *(vrs)*
Owners Manual—USA_English *(nna)*
03/15/06—cathy ☜

COOLING

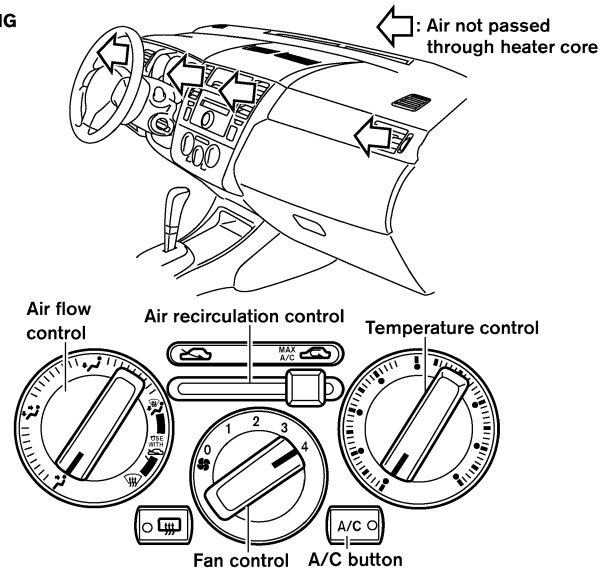

Fan control	Air recirculation control	A/C button	Temp. control	Air flow control
4	MAX A/C	ON	COLD (LEFT)	

LHA0668

SERVICING AIR CONDITIONER

The air conditioner system in your NISSAN vehicle is charged with a refrigerant designed with the environment in mind.

This refrigerant does not harm the earth's ozone layer.

Special charging equipment and lubricant is required when servicing your NISSAN air conditioner. Using improper refrigerants or lubricants will cause severe damage to your air conditioner system. See "Air conditioner system refrigerant and lubricant recommendations" in the "Technical and consumer information" section of this manual.

A NISSAN dealer is able to service your "environmentally friendly" air conditioning system.

⚠ WARNING

The air conditioner system contains refrigerant under high pressure. To avoid personal injury, any air conditioner service should be done only by an experienced technician with proper equipment.

☞ **REVIEW COPY—*2007 Versa*** *(vrs)*
Owners Manual—USA_English *(nna)*
03/06/06—arosenma ☜

RADIO

Turn the ignition key to the ACC or ON position and press the PWR button to turn the radio on. If you listen to the radio with the engine not running, the key should be turned to the ACC position.

Radio reception is affected by station signal strength, distance from radio transmitter, buildings, bridges, mountains and other external influences. Intermittent changes in reception quality normally are caused by these external influences.

Using a cellular phone in or near the vehicle may influence radio reception quality.

Radio reception

Your NISSAN radio system is equipped with state-of-the-art electronic circuits to enhance radio reception. These circuits are designed to extend reception range, and to enhance the quality of that reception.

However there are some general characteristics of both FM and AM radio signals that can affect radio reception quality in a moving vehicle, even when the finest equipment is used. These characteristics are completely normal in a given reception area, and do not indicate any malfunction in your NISSAN radio system.

Reception conditions will constantly change because of vehicle movement. Buildings, terrain, signal distance and interference from other vehicles can work against ideal reception. Described below are some of the factors that can affect your radio reception.

FM RADIO RECEPTION

Range: FM range is normally limited to 25 – 30 miles (40 – 48 km), with monaural (single channel) FM having slightly more range than stereo FM. External influences may sometimes interfere with FM station reception even if the FM station is within 25 miles (40 km). The strength of the FM signal is directly related to the distance between the transmitter and receiver. FM signals follow a line-of-sight path, exhibiting many of the same characteristics as light. For example, they will reflect off objects.

Fade and drift: As your vehicle moves away from a station transmitter, the signals will tend to fade and/or drift.

Static and flutter: During signal interference from buildings, large hills or due to antenna position (usually in conjunction with increased distance from the station transmitter) static or flutter can be heard. This can be reduced by adjusting the treble control to reduce treble response.

Multipath reception: Because of the reflective characteristics of FM signals, direct and reflected signals reach the receiver at the same time. The signals may cancel each other, resulting in momentary flutter or loss of sound.

AM RADIO RECEPTION

AM signals, because of their low frequency, can bend around objects and skip along the ground. In addition, the signals can be bounced off the ionosphere and bent back to earth. Because of these characteristics, AM signals are also subject to interference as they travel from transmitter to receiver.

Fading: Occurs while the vehicle is passing through freeway underpasses or in areas with many tall buildings. It can also occur for several seconds during ionospheric turbulence even in areas where no obstacles exist.

Static: Caused by thunderstorms, electrical power lines, electric signs and even traffic lights.

SATELLITE RADIO RECEPTION (if so equipped)

When the satellite radio is first installed or the battery has been replaced, the satellite radio may not work properly. This is not a malfunction. Wait more than 10 minutes with satellite radio ON and the vehicle outside of any metal or large building for satellite radio to receive all of the necessary data.

☞ **REVIEW COPY—*2007 Versa*** *(vrs)*
Owners Manual—USA_English *(nna)*
03/06/06—arosenma ☜

No satellite radio reception is available and “NO SAT” is displayed when the SAT band option is selected unless optional satellite receiver and antenna are installed and an XM® or SIRIUS™ satellite radio service subscription is active. Satellite radio can only be installed in vehicles that were factory pre-wired for satellite radio. Satellite radio is not available in Alaska, Hawaii and Guam.

Satellite radio performance may be affected if cargo carried on the roof blocks the satellite radio signal.

If possible, do not put cargo over the satellite antenna.

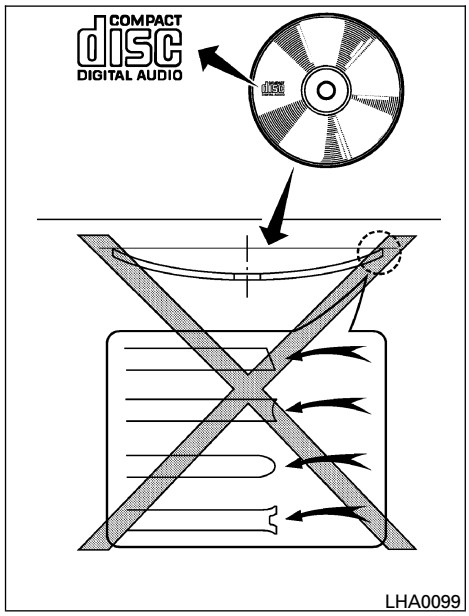

AUDIO OPERATION PRECAUTIONS

Compact disc (CD) player

⚠ CAUTION

- **Do not force a compact disc into the CD insert slot. This could damage the CD and/or CD changer/player.**
- **Trying to load a CD with the CD door closed could damage the CD and/or CD changer.**
- **Only one CD can be loaded into the CD player at a time.**
- **Only load one CD into the CD changer at a time**

- **Only use high quality 4.7 inches (12 cm) round discs that have the “COMPACT disc DIGITAL AUDIO” logo on the disc or packaging.**
- **During cold weather or rainy days, the player may malfunction due to the humidity. If this occurs, remove the CD and dehumidify or ventilate the player completely.**
- **The player may skip while driving on rough roads.**
- **The CD player sometimes cannot function when the compartment temperature is extremely high or low.**

☞ **REVIEW COPY—*2007 Versa*** *(vrs)*
Owners Manual—USA_English *(nna)*
03/06/06—arosenma ☜

Decrease/increase the temperature before use.

- **Do not expose the CD to direct sunlight.**
- **CDs that are in poor condition or are dirty, scratched or covered with fingerprints may not work properly.**
- **The following CDs may not work properly:**
  - **Copy control compact discs (CCCD)**
  - **Recordable compact discs (CD-R)**
  - **Rewritable compact discs (CD-RW)**
- **Do not use the following CDs as they may cause the CD player to malfunction:**
  - **3.1 in (8 cm) discs with an adapter**
  - **CDs that are not round**
  - **CDs with a paper label**
  - **CDs that are warped, scratched, or have abnormal edges**
- **This audio system can only play prerecorded CDs. It has no capability to record or burn CDs.**
- **If the CD cannot be played, one of the following messages will be displayed.**

  CHECK DISC:

  - **Confirm that the CD is inserted correctly (the label side is facing up, etc.).**
  - **Confirm that the CD is not bent or warped and it is free of scratches.**

  PRESS EJECT:

  This is an error due to excessive temperature inside the player. Remove the CD by pressing the EJECT button. After a short time, reinsert the CD. The CD can be played when the temperature of the player returns to normal.

  UNPLAYABLE:

  The file is unplayable in this audio system (only MP3 CD).

Compact Disc with MP3

Terms:

- MP3 — MP3 is short for Moving Pictures Experts Group Audio Layer 3. MP3 is the most well-known compressed digital audio file format. This format allows for near "CD quality" sound, but at a fraction of the size of normal audio files. MP3 conversion of an audio track from CD-ROM can reduce the file size by approximately a 10:1 ratio with virtually no perceptible loss in quality. MP3 compression removes the redundant and irrelevant parts of a sound signal that the human ear doesn't hear.
- Bit rate — Bit rate denotes the number of bits per second used by a digital music file. The size and quality of a compressed digital audio file is determined by the bit rate used when encoding the file.
- Sampling frequency — Sampling frequency is the rate at which the samples of a signal are converted from analog to digital (A/D conversion) per second.
- ID3 tag — The ID3 tag is the part of the encoded MP3 file that contains information about the digital music file such as song title, artist, album title, encoding bit rate, track time duration, etc. ID3 tag information is displayed on the Album/Artist/Track title line on the display.

☞ **REVIEW COPY—*2007 Versa*** *(vrs)*
Owners Manual—USA_English *(nna)*
03/06/06—arosenma ☜

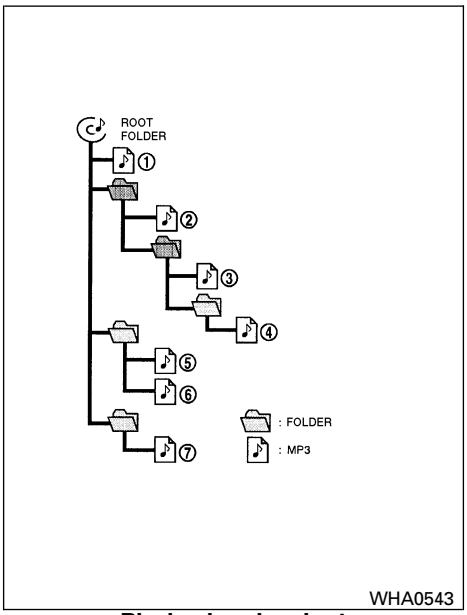

Playback order chart

Playback order:

Playback order of the CD with compressed files (MP3) is as illustrated.

- The names of folders not containing MP3 files are not shown in the display.
- If there is a file in the top level of the disc, “ROOT” is displayed.
- The playback order is the order in which the files were written by the writing software. Therefore, the files might not play in the desired order.

☞ **REVIEW COPY—*2007 Versa*** *(vrs)*
Owners Manual—USA_English *(nna)*
03/06/06—arosenma ☜

Specification chart:

Supported media			CD, CD-R, CD-RW
Supported file systems			ISO9660 LEVEL1, ISO9660 LEVEL2, Apple ISO, Romeo, Joliet * ISO9660 Level 3 (packet writing) is not supported.
Supported versions*	MP3	Version	MPEG1, MPEG2, MPEG2.5
		Sampling frequency	8 kHz - 48 kHz
		Bit rate	8 kbps - 320 kbps, VBR
Tag information			ID3 tag VER1.0, VER1.1, VER2.2, VER2.3 (MP3 only)
Folder levels			Folder levels: 8, Max folders: 255 (including root folder), Files: 512
Text character number limitation			31 characters
Displayable character codes			01: ASCII, 02: ISO-8859-1, 03: UNICODE (UTF-16 BOM Big Endian), 04: UNICODE (UTF-16 Non-BOM Big Endian), 05: (UTF-8), 06: UNICODE (Non-UTF-16 BOM Little Endian)

*Files created with a combination of 48 kHz sampling frequency and 64 kbps bit rate cannot be played.

☞ **REVIEW COPY—*2007 Versa*** *(vrs)*
Owners Manual—USA_English *(nna)*
03/06/06—arosenma ☜

Troubleshooting guide:

Symptom	Cause and Countermeasure
Cannot play	Check if the disc was inserted correctly.
	Check if the disc is scratched or dirty.
	Check if there is condensation inside the player. If there is, wait until the condensation is gone (about 1 hour) before using the player.
	If there is a temperature increase error, the CD player will play correctly after it returns to the normal temperature.
	Files with extensions other than ".MP3", ".mp3" or ".wma" cannot be played. In addition, the character codes and number of characters for folder names and file names should be in compliance with the specifications.
Poor sound quality	Check if the disc is scratched or dirty.
	Bit rate may be too low.
It takes a relatively long time before the music starts playing.	If there are many folders or file levels on the MP3 disc, or if it is a multisession disc, some time may be required before the music starts playing.
Music cuts off or skips	The writing software and hardware combination might not match, or the writing speed, writing depth, writing width, etc., might not match the specifications. Try using the slowest writing speed.
Skipping with high bit rate files	Skipping may occur with large quantities of data, such as for high bit rate data.
Moves immediately to the next song when playing	When a non-MP3 file has been given an extension of ".MP3" or ".mp3", or when play is prohibited by copyright protection, there will be approximately 5 seconds of no sound and then the player will skip to the next song.
Songs do not play back in the desired order	The playback order is the order in which the files were written by the writing software. Therefore, the files might not play in the desired order.

☞ **REVIEW COPY—*2007 Versa*** *(vrs)*
Owners Manual—USA_English *(nna)*
03/06/06—arosenma ☜

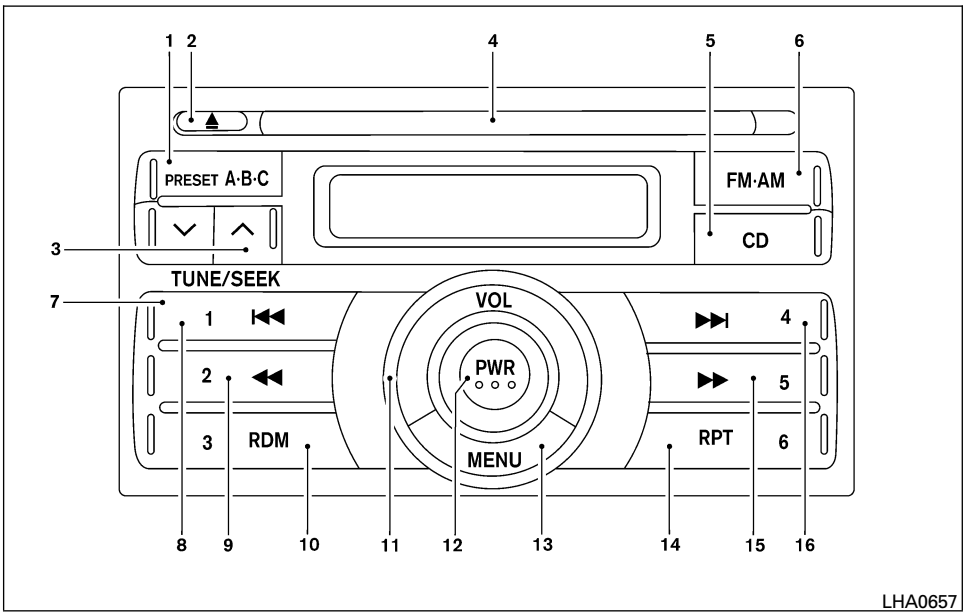

1. PRESET A·B·C button
2. ⏏ CD eject button
3. TUNE/SEEK buttons
4. CD insert slot
5. CD button
6. FM·AM button
7. Station select (1 - 6) buttons
8. ⏮ (CD seek/track) button
9. ◀◀ (CD rewind) button
10. RDM button
11. VOL control knob
12. PWR button
13. MENU button
14. RPT button
15. ▶▶ (CD fast forward) button
16. ▶▶| (CD seek/track) button

FM/AM RADIO WITH COMPACT DISC (CD) PLAYER

For all operation precautions, see "Audio operation precautions" earlier in this section.

PWR button and VOL control knob

Turn the ignition key to the ACC or ON position, then press the PWR button. If you listen to the radio with the engine not running, turn the key to the ACC position. The mode (radio or CD) that was playing immediately before the system was turned off resumes playing.

When no CD is loaded, the radio comes on. Pressing the PWR button again turns the system off.

Turn the VOL control knob to the right to increase volume or to the left to decrease volume.

MENU button (BASS, TREBLE, FADE, BALANCE and CLOCK):

Press the MENU button to change the mode as follows:

BAS → TRE → FAD → BAL → CLK → Audio or OFF → BAS

☞ **REVIEW COPY—*2007 Versa*** *(vrs)*
Owners Manual—USA_English *(nna)*
03/06/06—arosenma ☜

To adjust Bass, Treble, Fade and Balance, press the MENU button until the desired mode appears in the display. Press the TUNE/SEEK button to adjust Bass and Treble to the desired level. You can also use the TUNE/SEEK button to adjust Fader and Balance modes. Fader adjusts the sound level between the front and rear speakers and Balance adjusts the sound between the right and left speakers.

Once you have adjusted the sound quality to the desired level, press the MENU button repeatedly until the radio or CD display reappears. Otherwise, the radio or CD display will automatically reappear after about 10 seconds.

Clock operation

Press the MENU button until CLK-ON or CLK-OFF is displayed, use the TUNE/SEEK button to turn the clock display on or off.

Clock set

If the clock is not displayed with the ignition switch in the ACC or ON position, you need to select the CLK-ON mode. Press the MENU button repeatedly until CLK-OFF mode is displayed. Use the TUNE/SEEK button to enable CLK-ON mode.

1. Press the MENU button repeatedly until CLK-ON mode appears.
2. Press the MENU button again, the time will start flashing.
3. Press the TUNE/SEEK button ∨ or ∧ to adjust the hour.
4. Press the MENU button again; the display will switch to the minute adjustment mode.
5. The minutes will start flashing. Press TUNE/SEEK button ∨ or ∧ to adjust the minutes.
6. Press the MENU button again to exit the clock set mode.

The display will return to the regular clock display after 10 seconds, or press the MENU button again to return to the regular clock display.

Resetting the time

Hold the MENU button down and then press the TUNE/SEEK button, the time will reset as follows:

- If the displayed minutes before the reset are in the range of :00 - :29, the hour displayed before the reset will stay the same and the minutes will be reset to :00.
- If the displayed minutes before the reset are in the range of :30 - :59, the hour displayed before the reset will advance by one hour and the minutes will be reset to :00.

For example, if the MENU button and the TUNE/SEEK button are pressed while the time displayed is between 8:00 and 8:29, the display will be reset to 8:00. If the buttons were pressed while the time was between 8:30 and 8:59, the display will be reset to 9:00. At the same time the display will return to the audio.

FM/AM radio operation

FM·AM button:

Press the FM·AM button to change from AM ⟷ FM reception.

The FM stereo indicator, ST, illuminates during FM stereo reception. When the stereo broadcast signal is weak, the radio automatically changes from stereo to monaural reception.

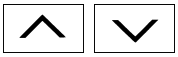

TUNE/SEEK buttons:

Manual tuning

Press the ∨ or ∧ button for less than 0.5 seconds for manual tuning.

SEEK tuning

Press the ∨ or ∧ button for more than 1.5 seconds to seek through the frequencies. Seek tuning begins from low to high frequencies, or high to low frequencies depending on which button is pressed, and stops at the next broadcasting station. Once the highest broadcasting

☞ **REVIEW COPY—*2007 Versa*** *(vrs)*
Owners Manual—USA_English *(nna)*
03/06/06—arosenma ☜

station is reached, the radio continues in the seek mode at the lowest broadcasting station.

Station memory operations:

18 stations can be set for the FM and AM radio to the A, B and C preset button in any combination of AM or FM stations.

1. Press the PRESET A·B·C button to change between storage banks. The radio displays the icon A, B or C to indicate which set of presets are active.
2. Tune to the desired station using manual TUNE or SEEK tuning. Press and hold any of the desired station memory buttons (1 – 6) until a beep sound is heard. (The radio mutes when the select button is pressed.)
3. The channel indicator will then come on and the sound will resume. Programming is now complete.
4. Other buttons can be set in the same manner.

If the battery cable is disconnected, or if the fuse opens, the radio memory will be canceled. In that case, reset the desired stations.

Compact disc (CD) player operation

Turn the ignition key to the ACC or ON position, and carefully insert the compact disc into the slot with the label side up. The compact disc is automatically pulled into the slot and starts to play.

If the radio is already operating, it automatically turns off and the compact disc begins to play.

CD button:

When the CD button is pressed with a compact disc loaded and the radio playing, the radio turns off and the last used compact disc starts to play.

Rewind and Fast Forward buttons:

When the ◀◀ or ▶▶ button is pressed while the compact disc is playing, the compact disc plays at an increased speed while rewinding or fast forwarding. When the button is released, the compact disc returns to normal play speed.

SEEK/TRACK buttons:

When ▶▶| is pressed while the compact disc is playing, the next track following the present one starts to play from the beginning. Press ▶▶| several times to skip several tracks. Each time the button is pressed, the CD advances 1 additional track. The track number appears in the display window. (When the last track on the compact disc is skipped, the first track is played.)

When |◀◀ is pressed, the track being played returns to the beginning. Press |◀◀ several times to skip back several tracks. Each time the button is pressed the CD moves back 1 track.

RPT button:

When the RPT button is pressed while the compact disc is being played, the play pattern can be changed as follows:

1 TRACK RPT ⟷ Normal

1 TRACK RPT: The track that is currently playing will be repeated.

RDM button:

When the RDM button is pressed while the compact disc is being played, the play pattern can be changed as follows:

RDM ⟷ Normal

RDM: Tracks from the disc that is currently playing will be played randomly.

CD EJECT button:

When the ⏏ button is pressed with a compact disc loaded, the compact disc will be ejected.

When the ⏏ button is pressed twice with a compact disc loaded, the compact disc will be ejected further, for easier CD removal.

☞ **REVIEW COPY—*2007 Versa*** *(vrs)*
Owners Manual—USA_English *(nna)*
03/06/06—arosenma ☜

When the ⏏ button is pressed while the compact disc is being played, the compact disc will eject and the system will turn off.

CD IN indicator:

CD IN indicator appears on the display when the CD is loaded with the system on.

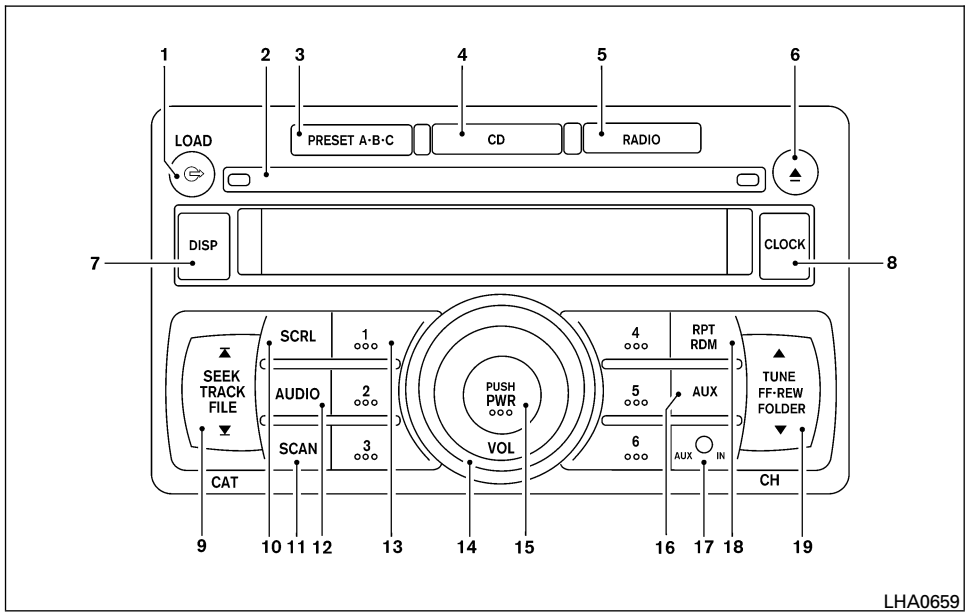

1. CD LOAD button
2. CD insert slot
3. PRESET A·B·C button
4. CD button
5. RADIO button*
6. ⏏ CD eject button
7. DISP button
8. CLOCK button
9. SEEK/TRACK/FILE button
10. SCRL button
11. SCAN button
12. AUDIO button

☞ **REVIEW COPY—*2007 Versa*** *(vrs)*
Owners Manual—USA_English *(nna)*
03/06/06—arosenma ☜

13. Station and CD select (1–6) buttons
14. VOL control knob
15. PUSH PWR button
16. AUX button
17. AUX IN jack
18. RPT/RDM button
19. TUNE/FF·REW/FOLDER button

*No satellite radio reception is available when the RADIO button is pressed to access satellite radio stations unless optional satellite receiver and antenna are installed and an XM® or SIRIUS™ satellite radio service subscription is active. Satellite radio can only be installed in vehicles that were factory pre-wired for satellite radio. Satellite radio is not available in Alaska, Hawaii and Guam.

FM/AM/SAT RADIO WITH COMPACT DISC (CD) CHANGER

For all operation precautions, see "Audio operation precautions" earlier in this section.

No satellite radio reception is available when the RADIO button is pressed to access satellite radio stations unless optional satellite receiver and antenna are installed and an XM® or SIRIUS™ satellite radio service subscription is active. Satellite radio can only be installed in vehicles that were factory pre-wired for satellite radio. Satellite radio is not available in Alaska, Hawaii and Guam.

Audio main operation

PWR and VOL control:

Turn the ignition key to ACC or ON, and then press the PWR button while the system is off to call up the mode (radio or CD) which was playing immediately before the system was turned off.

To turn the system off, press the PWR button.

Turn the VOL control knob to adjust the volume.

This vehicle may be equipped with Speed Sensitive Volume (SSV) for audio. The audio volume changes as the driving speed changes.

AUDIO button (BASS, TREBLE, BALANCE, FADE, SSV and BEEP):

Press the AUDIO button to change the mode as follows:

BAS → TRE → BAL → FAD → SPD VOL (SSV if so equipped) → BEEP ON/OFF → Audio or OFF → BAS

To adjust Bass, Treble, Balance and Fade, press the AUDIO button until the desired mode appears in the display. Press the TUNE/FF·REW/FOLDER button to adjust Bass and Treble to the desired level. You can also use the TUNE/FF·REW/FOLDER button to adjust Balance and Fade modes. Balance adjusts the sound between the right and left speakers and Fade adjusts the sound level between the front and rear speakers.

To change the SSV mode to OFF, LOW, MID or HIGH, press the TUNE/FF·REW/FOLDER button up or down.

To change the BEEP to ON or OFF, press the TUNE/FF·REW/FOLDER button up or down. This will enable or disable the beep sound heard during menu selection.

Once you have adjusted the sound quality to the desired level, press the AUDIO button repeatedly until the radio or CD display reappears. Otherwise, the radio or CD display will automatically reappear after about 10 seconds.

Clock operation

Pressing the CLOCK button displays the clock with the radio on or off. Press the CLOCK button again to turn off the clock display.

Pressing the CLOCK button alternates the clock and the radio/CD player options in the display.

☞ **REVIEW COPY—*2007 Versa*** *(vrs)*
Owners Manual—USA_English *(nna)*
03/06/06—arosenma ☜

Clock set

1. Press and hold the CLOCK button until it beeps for more than 1.5 seconds to enter the clock set mode.
2. The time will start flashing. Press the SEEK/TRACK/FILE button ▲ or ▼ to adjust the hours.
3. Press the TUNE/FF·REW/FOLDER button ▼ or ▲ to adjust the minutes.
4. Press the CLOCK button again to exit the clock set mode.

The display will return to the regular clock display after 10 seconds, or you may press the CLOCK button again to return to the regular clock display.

DISP (display) button:

The DISP (display) button will show text about FM stations, CD or MP3 and SAT (satellite, if so equipped) information in the audio display.

FM display mode

To change the text displayed while listening to an FM station that broadcasts with Radio Data System (RDS), press the DISP button. The DISP button will allow you to change RDS information as follows: Station call number → Program type → Station information → Station call number.

- Station call number displays the radio frequency number of the station.
- Program type displays the type or category of radio station.
- Station information displays information the radio station wants to broadcast.

For additional information, see “Radio data system (RDS)” later in this section.

CD display mode

To change the text displayed while playing a CD with text, press the DISP button. The DISP button will allow you to scroll through CD text as follows: Track number and Track time ⟷ Disc title ⟷ Track number and Track title.

- Track number displays the number selected on the disc.
- Track time displays the amount of time the track has played.
- Disc title displays the title of the CD being played.
- Track title displays the title of the selected CD track.

MP3 display mode

To change the text displayed when listening to an MP3 with MP3 text (when CD with text is being used), press the DISP button. The DISP button will scroll through the CD text as follows: Track number and Track time ⟷ Folder number and Folder title ⟷ Album title ⟷ Artist title ⟷ Song title ⟷ Disc title ⟷ Track number and Track title.

- Track number and time displays the number of the track and how long it has been playing.
- Folder number and title displays the number of the folder and the name.
- Album title displays the album name of the track playing.
- Song title displays the song name of the track playing.
- Disc title displays the disc name of the CD playing
- Track number and title displays the number of the track and the name.

Display satellite radio display mode (if so equipped)

To change the text displayed when listening to satellite radio (if so equipped) press the DISP button. The DISP button will scroll through the broadcast information as follows: Name ⟷ Title ⟷ Current display mode.

☞ **REVIEW COPY—*2007 Versa*** *(vrs)*
Owners Manual—USA_English *(nna)*
03/06/06—arosenma ☜

To change the default display mode press the AUDIO button to display mode and press the TUNE button to select the following display modes: Channel number ⟷ Channel name ⟷ Name ⟷ Title. Once the display mode is selected press the AUDIO button again to store the setting. If the AUDIO button is not pressed after 8 seconds the display will refresh with the last selected display mode setting.

- Channel number mode displays the channel number of the selected satellite radio station.
- Channel name mode displays the channel name of the selected satellite radio station.
- Name mode displays the name of the artist, host or weather condition of the selected satellite radio station.
- Title mode displays the song title, show name, or temperature of the selected satellite radio station.

SCRL (Scroll) button:

Press the SCRL button to scroll through CD/MP3 text that is too long to be displayed on the first line of the display.

FM/AM/SAT radio operation

FM/AM/SAT band select:

Pressing the RADIO button will change the band as follows:

AM ⟷ FM or SAT (Satellite, if so equipped)

When the RADIO button is pressed while the ignition switch is in the ACC or ON position, the radio will come on at the station last played.

No satellite radio reception is available when the RADIO button is pressed to access satellite radio stations unless optional satellite receiver and antenna are installed and an XM® or SIRIUS™ satellite radio service subscription is active. Satellite radio can only be installed in vehicles that were factory pre-wired for satellite radio. Satellite radio is not available in Alaska, Hawaii and Guam. If satellite radio is not operational then the RADIO button is used to toggle between AM and FM bands.

If a compact disc is playing when the RADIO button is pressed, the compact disc will automatically be turned off and the last radio station played will come on.

The FM stereo indicator ST will glow during FM stereo reception. When the stereo broadcast signal is weak, the radio will automatically change from stereo to monaural reception.

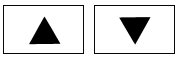

TUNE/FF·REW/FOLDER (Tuning):

To manually tune the radio, press the TUNE/FF·REW/FOLDER button ▲ or ▼ .

To move quickly through the channels, hold either the ▲ or ▼ button down for more than 1.5 seconds.

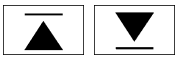

SEEK/TRACK/FILE tuning:

Press the SEEK/TRACK/FILE button ▲ or ▼ for less than 1.5 seconds to tune from high to low or low to high frequencies and stop at the next broadcasting station.

To seek quickly through the channels, press and hold the SEEK/TRACK/FILE button for more than 1.5 seconds. When the button is released, the radio will seek to the next broadcasting station.

SCAN tuning:

Press the SCAN button for more than 1.5 seconds to stop at each broadcasting station for 5 seconds. Pressing the button again during this 5 second period will stop SCAN tuning and the radio will remain tuned to that station. If the SCAN button is not pressed within 5 seconds, SCAN tuning moves to the next station.

☞ **REVIEW COPY—*2007 Versa*** *(vrs)*
Owners Manual—USA_English *(nna)*
03/06/06—arosenma ☜

PRESET A·B·C (Station memory operations):

18 stations can be set for the FM, AM and SAT (satellite, if so equipped) radio to the A, B and C preset button in any combination of FM, AM or SAT stations.

1. Choose preset channel A, B or C using the PRESET A·B·C select button.
2. Select the desired FM, AM or SAT station band.
3. Tune to the desired station using manual, SEEK or SCAN tuning. Press and hold any of the desired station memory buttons (1 – 6) until a beep sound is heard.
4. The channel indicator will then come on and the sound will resume. Programming is now complete.
5. Other buttons can be set in the same manner.

If the battery cable is disconnected, or if the fuse opens, the radio memory will be canceled. In that case, reset the desired stations.

Radio data system (RDS):

RDS stands for Radio Data System, and is a data information service transmitted by some radio stations on the FM band (not AM band). Currently, most RDS stations are in large cities, but many stations are now considering broadcasting RDS data.

RDS can display:

- Station call sign, such as “WHFR 98.3”.
- Station name, such as “The Groove”.
- Music or programming type such as “Classical”, “Country”, or “Rock”.

If the station broadcasts RDS information, the RDS icon is displayed.

Compact disc (CD) changer operation

Turn the ignition key to the ACC or ON position and insert the compact disc into the slot with the label side facing up. The compact disc will be guided automatically into the slot and start playing. To insert the disc, first press the button.

If the radio is already operating, it will automatically turn off and the compact disc will play.

If the system has been turned off while the compact disc was playing, pressing the PWR button will start the compact disc.

Do not use 3.1 in (8 cm) diameter compact discs in the CD changer.

LOAD button:

To insert a CD in the CD changer, press the load button for less than 1.5 seconds. Select the loading slot by pressing the CD insert select button (1 – 6), then insert the CD.

To insert 6 CDs to the CD changer, press the load button for more than 1.5 seconds.

The slot numbers (1 – 6) will illuminate on the display when CDs are loaded into the changer.

CD button:

When the CD button is pressed with the system off and the compact disc loaded, the system will turn on and the compact disc will start to play.

When the CD button is pressed with the compact disc loaded with the radio playing, the radio will automatically be turned off and the compact disc will start to play.

TUNE/FF·REW/FOLDER (Fast Forward and Rewind):

When the TUNE/FF·REW/FOLDER button is pressed, ▲ (fast forward) or ▼ (rewind) while the compact disc is being played, the compact disc will play while fast forwarding or rewinding . When the button is released, the compact disc will return to normal play speed.

☞ **REVIEW COPY—*2007 Versa*** *(vrs)*
Owners Manual—USA_English *(nna)*
03/07/06—cathy ☜

SEEK/TRACK/FILE:

When the ▼ button is pressed for less than 1.5 seconds while a compact disc is playing, the track being played returns to its beginning. Press several times to skip back through tracks. The compact disc will go back the number of times the button is pressed.

When the ▲ button is pressed for less than 1.5 seconds while the compact disc is playing, the next track will start to play from its beginning. Press several times to skip through tracks. The compact disc will advance the number of times the button is pressed. (When the last track on the compact disc is skipped through, the first track will be played.)

TUNE/FF·REW/FOLDER:

While playing an MP3, press the TUNE/FF·REW/FOLDER button ▲ or ▼ to scan forward or backward through available folders.

To fast forward or rewind through an audio track, press the TUNE/FF·REW/FOLDER button ▲ or ▼ for more than 1.5 seconds.

SCAN button:

While listening to a CD, press the SCAN button to preview the first 10 seconds of each track on the current CD playing. Pressing the SCAN button during this 10 second period stops the scan and the CD remains on that track.

Press the SCAN button for more than 1.5 seconds to preview 10 seconds of the first track on each disc, only if more than 1 disc is loaded into the CD changer. Pressing the button again during this 10 second period will stop the scan and the CD that was being previewed will remain on and will continue the regular playback.

CD select buttons:

To play another CD that has been loaded, press a CD select button (1 – 6).

RPT/RDM button:

When the RPT/RDM button is pressed while the compact disc is played, the play pattern can be changed as follows:

RPT DISC → RPT TRACK → RDM ALL DISC → RDM DISC → RPT ALL DISC → RPT DISC

RPT DISC: The disc that is currently playing will be repeated.
RPT TRACK: The track that is currently playing will be repeated.
RDM ALL DISC: Tracks from all discs will be played randomly.
RDM DISC: Tracks from the disc that is currently playing will be played randomly.
RPT ALL DISC: All discs will be played normally, with no special play pattern enabled.

MP3 RPT/RDM mode:

When the RPT/RDM button is pressed while an MP3 compact disc is played, the play pattern can be changed as follows:

RPT DISC → RPT FOLDER → RPT TRACK → RDM ALL DISC → RPT ALL DISC → RPT DISC

RPT DISC: The disc that is currently playing will be repeated.
RPT FOLDER: The folder selected that is currently playing will be repeated.
RPT TRACK: The track that is currently playing will be repeated.
RDM ALL DISC: Tracks from all discs will be played randomly.
RPT ALL DISC: All discs will be played normally, with no special play pattern enabled.

EJECT button:

Current disc:

- Press the slot number (1 – 6) for the desired disc, then press the ⏏ button. The compact disc will be ejected.
- When the ⏏ button is pressed twice, the CD will be ejected further for easier CD removal. If the disc is not removed within 15 seconds, the disc will reload.

☞ **REVIEW COPY—*2007 Versa*** *(vrs)*
Owners Manual—USA_English *(nna)*
03/06/06—arosenma ☜

All discs:

- Press and hold the ⏏ button for more than 1.5 seconds. The compact discs will be ejected one by one. If a disc is not removed within 15 seconds, or the ⏏ button is pressed again during the eject sequence, the entire disc eject sequence will be canceled.

When this button is pressed while the compact disc is being played, the compact disc will eject and the last source will be played.

CD IN indicator:

The slot numbers (1 – 6) will illuminate if CDs have been loaded into the changer in CD mode only.

AUX (Auxiliary) button:

The AUX jack is located on the CD player. The AUX audio input jack accepts any standard analog audio input such as from a portable cassette tape/CD player, MP3 player or laptop computers.

Press the AUX button to play a compatible device when it is plugged into the AUX jack.

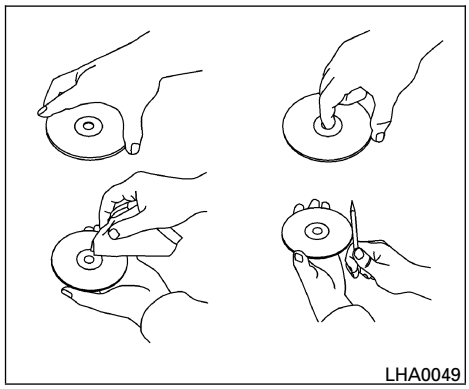

CD CARE AND CLEANING

- Handle a CD by its edges. Do not bend the disc. Never touch the surface of the disc.
- Always place the discs in the storage case when they are not being used.
- To clean a disc, wipe the surface from the center to the outer edge using a clean, soft cloth. Do not wipe the disc using a circular motion.
- Do not use a conventional record cleaner or alcohol intended for industrial use.
- A new disc may be rough on the inner and outer edges. Remove the rough edges by rubbing the inner and outer edges with the side of a pen or pencil as illustrated.

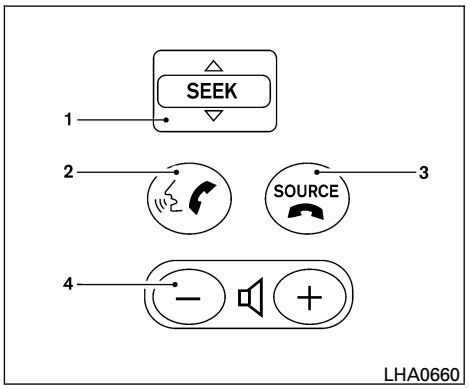

1. SEEK tuning switch
2. Phone operation switch
3. POWER on and SOURCE select switch
4. Volume control switch

STEERING WHEEL SWITCH FOR AUDIO CONTROL (if so equipped)

The audio system can be operated using the controls on the steering wheel.

☞ **REVIEW COPY—*2007 Versa*** *(vrs)*
Owners Manual—USA_English *(nna)*
03/06/06—arosenma ☜

POWER on switch

With the ignition key turned to the ACC or ON position, push the POWER switch to turn the audio system on.

SOURCE select switch:

Push the SOURCE select switch to change the mode in the following sequence: PRESET A → PRESET B → PRESET C → PRESET A.

With a CD inserted and an auxiliary device plugged in, push the SOURCE select switch to change the mode in the following sequence: CD → AUX → PRESET A → PRESET B → PRESET C → CD.

While in one of the preset radio station banks (A, B or C), use the SEEK switch ▼ or ▲ to select one of the preset radio stations (1–6).

Volume control switch

Push the volume control switch to increase or decrease the volume.

▼ ▲ SEEK tuning

Memory change (radio):

While in one of the preset radio station banks (A, B or C), push the SEEK tuning switch ▼ or ▲ for less than 1.5 seconds to change to the next preset station in memory.

Seek tuning (radio):

Push the SEEK tuning switch ▼ or ▲ for more than 1.5 seconds to seek the next or previous radio station.

Next/Previous track (CD):

Push the SEEK tuning switch ▼ or ▲ for less than 1.5 seconds to return to the beginning of the present track or skip to the next track. Push several times to skip back or skip through tracks.

Change disc (CD) (if so equipped):

Push the SEEK tuning switch ▼ or ▲ for more than 1.5 seconds to change the playing disc up or down.

ANTENNA

The antenna should be placed in the rearward position for maximum radio reception.

The antenna cannot be shortened, but can be folded down or removed. When you need to remove the antenna, turn the antenna rod counterclockwise.

To install the antenna rod, turn the antenna clockwise. Tighten the antenna rod to specification using a suitable tool such as an open-end wrench. The antenna rod tightening specification is 18 – 23 in-lb (2.0 – 2.6 N·m). Do not use pliers to tighten the antenna as they can leave marks on the antenna surface. The antenna rod cannot be hand tightened to the proper specification.

⚠ CAUTION

Always properly tighten the antenna rod during installation or the antenna rod may break during vehicle operation.

☞ **REVIEW COPY—*2007 Versa*** *(vrs)*
Owners Manual—USA_English *(nna)*
03/06/06—arosenma ☜

CAR PHONE OR CB RADIO

When installing a CB, ham radio or car phone in your NISSAN, be sure to observe the following precautions, otherwise the new equipment may adversely affect the engine control system and other electronic parts.

⚠ WARNING

- **A cellular telephone should not be used while driving so full attention may be given to vehicle operation. Some jurisdictions prohibit the use of cellular telephones while driving.**
- **If you must make a call while your vehicle is in motion, the hands free cellular phone operational mode (if so equipped) is highly recommended. Exercise extreme caution at all times so full attention may be given to vehicle operation.**
- **If a conversation in a moving vehicle requires you to take notes, pull off the road to a safe location and stop your vehicle before doing so.**

⚠ CAUTION

- **Keep the antenna as far away as possible from the electronic control modules.**
- **Keep the antenna wire more than 8 in (20 cm) away from the electronic control system harnesses. Do not route the antenna wire next to any harness.**
- **Adjust the antenna standing-wave ratio as recommended by the manufacturer.**
- **Connect the ground wire from the CB radio chassis to the body.**
- **For details, consult a NISSAN dealer.**

BLUETOOTH® HANDS-FREE PHONE SYSTEM (if so equipped)

⚠ WARNING

- **Use a phone after stopping your vehicle in a safe location. If you have to use a phone while driving, exercise extreme caution at all times so full attention may be given to vehicle operation.**
- **If a conversation in a moving vehicle requires you to take notes, pull off the road to a safe location and stop your vehicle before doing so.**

⚠ CAUTION

To avoid draining the vehicle battery, use a phone after starting the engine.

☞ **REVIEW COPY—*2007 Versa*** *(vrs)*
Owners Manual—USA_English *(nna)*
03/06/06—arosenma ☜

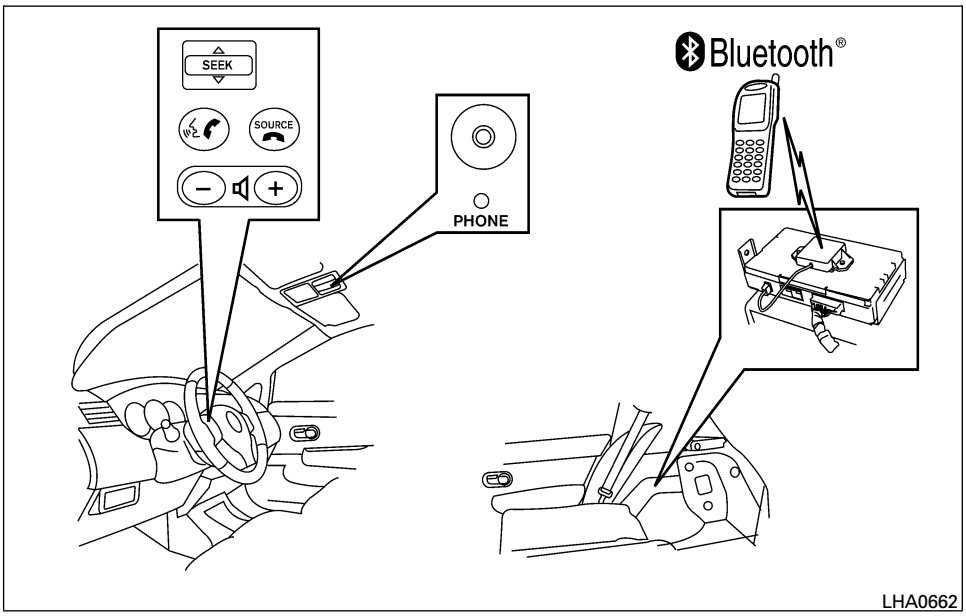

Your NISSAN is equipped with the Bluetooth® Hands-Free Phone System. If you are an owner of a Bluetooth® enabled cellular phone, you can set up the wireless connection between your cellular phone and the in-vehicle phone module. With Bluetooth® wireless technology, you can make or receive a hands-free telephone call with your cellular phone in the vehicle.

Once your cellular phone is paired to the in-vehicle phone module, no other phone connecting procedure is required. Your phone is automatically connected with the in-vehicle phone module when the ignition switch is turned to the ON position with the paired cellular phone turned on and carried in the vehicle.

You can register up to 5 different Bluetooth® cellular phones to the in-vehicle phone module. However, you can talk on only one cellular phone at a time.

Before using the Bluetooth® Hands-Free Phone System, refer to the following notes.

- Set up the wireless connection between a cellular phone and the in-vehicle phone module before using the hands-free phone system.
- Some Bluetooth® enabled cellular phones may not be recognized by the in-vehicle phone module. Please visit www.nissan-usa.com/bluetooth for a recommended phone list.
- You will not be able to use a hands-free phone under the following conditions:
  - Your vehicle is outside of the cellular service area.
  - Your vehicle is in an area where it is difficult to receive radio waves; such as in a tunnel, in an underground parking garage, near a tall building or in a mountainous area.

☞ **REVIEW COPY—*2007 Versa*** *(vrs)*
Owners Manual—USA_English *(nna)*
03/06/06—arosenma ☜

– Your cellular phone is locked to prevent it from being dialed.

When the radio wave condition is not ideal or ambient sound is too loud, it may be difficult to hear the other person's voice during a call.

Do not place the cellular phone in an area surrounded by metal or far away from the in-vehicle phone module to prevent tone quality degradation and wireless connection disruption.

While a cellular phone is connected through the Bluetooth® wireless connection, the battery power of the cellular phone may discharge quicker than usual.

If the hands-free phone system seems to be malfunctioning, please refer to "Troubleshooting guide" later in this section. You can also visit www.nissan-usa.com/bluetooth for troubleshooting help.

Refer to the cellular phone Owner's Manual regarding the telephone charges, cellular phone antenna and body, etc.

This device complies with Part 15 of the FCC Rules. Operation is subject to the following two conditions: (1) this device may not cause harmful interference, and (2) this device must accept any interference received, including interference that may cause undesired operation.

FCC Radiation Exposure Statement:

This equipment complies with FCC radiation exposure limits set forth for an uncontrolled environment. This equipment should be installed and operated with minimum distance 8 inches (20 cm) between the radiator and your body. This Transmitter must not be co-located or operating in conjunction with any other antenna or transmitter.

USING THE SYSTEM

The NISSAN Voice Recognition system allows hands-free operation of the Bluetooth® Phone System.

If the vehicle is in motion, some commands may not be available so full attention may be given to vehicle operation.

Initialization

When the ignition switch is turned to the ON position, NISSAN Voice Recognition is initialized, which takes a few seconds. When completed, the amber light on the overhead console illuminates and the system is ready to accept voice commands. If the button is pressed before the initialization completes, the system will announce "Hands-free phone system not ready" and will not react to voice commands.

Operating tips

To get the best performance out of the NISSAN Voice Recognition system, observe the following:

- Keep the interior of the vehicle as quiet as possible. Close the windows to eliminate surrounding noises (traffic noises, vibration sounds, etc.), which may prevent the system from recognizing voice commands correctly.
- Wait until the tone sounds before speaking a command. Otherwise, the command will not be received properly.
- Start speaking a command within 5 seconds after the tone sounds.
- Speak in a natural voice without pausing between words.

Giving voice commands

To operate NISSAN Voice Recognition, press and release the button located on the steering wheel. The light on the overhead console flashes to signal you have entered a voice recognition (VR) session. After the tone sounds, speak a command.

The command given is picked up by the microphone, and voice feedback is given when the command is accepted.

☞ **REVIEW COPY—*2007 Versa*** *(vrs)*
Owners Manual—USA_English *(nna)*
03/06/06—arosenma ☜

- If you need to hear the available commands for the current menu again, say “Help” and the system will repeat them.
- If a command is not recognized, the system announces, “Command not recognized. Please try again.” Repeat the command in a clear voice.
- If you want to go back to the previous command, you can say “Go back” or “Correction” any time the system is waiting for a response.
- You can cancel a command when the system is waiting for a response by saying, “Cancel” or “Quit.” The system announces “Cancel” and ends the VR session. You can also press the SOURCE button on the steering wheel at any time. Whenever the VR session is cancelled, a double beep is played to indicate you have exited the system.
- If you want to adjust the volume of the voice feedback, press the volume control switches (+ or -) on the steering wheel while being provided with feedback. You can also use the radio volume control knob.

How to say numbers

NISSAN Voice Recognition requires a certain way to speak numbers in voice commands. Refer to the following rules and examples.

- Either “zero” or “oh” can be used for “0”.

  Example: 1-800-662-6200

  – “One eight oh oh six six two six two oh oh”, or

  – “One eight zero zero six six two six two oh oh”

- Words can be used for the first 4 digits places only.

  Example: 1-800-662-6200

  – “One eight hundred six six two six two oh oh”,

  – NOT “One eight hundred six six two sixty two hundred, and

  – NOT “One eight oh oh six six two sixty two hundred.

- Numbers can be spoken in small groups. The system will prompt you to continue entering digits, if desired.

  Example: 1-800-662-6200

  – “One eight oh oh”

  The system repeats the numbers and prompts you to enter more.

  – “six six two”

  The system repeats the numbers and prompts you to enter more.

  – “six two oh oh”

- You can say “Star” for * and “Pound” for # at any time in any position of the phone number.

  Example: 1-555-1212 *123

  – “One five five five one two one two star one two three”

NOTE:

For best results, say phone numbers as single digits.

☞ **REVIEW COPY—*2007 Versa*** *(vrs)*
Owners Manual—USA_English *(nna)*
03/06/06—arosenma ☜

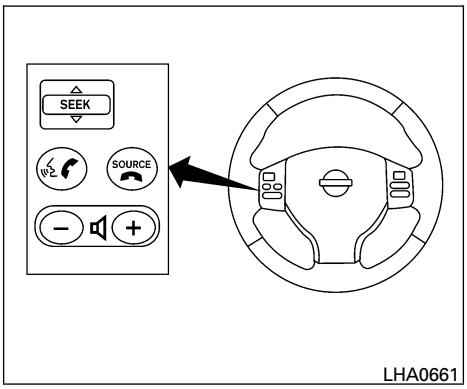

CONTROL BUTTONS

The control buttons for the Bluetooth® Hands-Free Phone System are located on the steering wheel.

PHONE/SEND
Press the button to initiate a VR session or answer an incoming call.

You can also use the button to skip through system feedback and to enter commands during a call. See "List of voice commands" and "During a call" later in this section for more information.

SOURCE PHONE/END
Press the SOURCE button to cancel a VR session or end a call.

GETTING STARTED

The following procedures will help you get started using the Bluetooth® Hands-Free Phone System with NISSAN Voice Recognition. For additional command options, refer to "List of voice commands" later in this section.

Choosing a language

You can interact with the Bluetooth® Hands-Free Phone System using English, Spanish or French.

To change the language, perform the following.

1. Press and hold the button for more than 5 seconds.
2. The system announces: "Press the PHONE/SEND ( ) button for the hands-free phone system to enter the speaker adaptation mode or press the PHONE/END (SOURCE) button to select a different language."
3. Press the SOURCE button.

   For information on speaker adaptation, see "Speaker adaptation (SA) mode" later in this section.
4. The system announces the current language and gives you the option to change the language to Spanish (in Spanish) or French (in French). Use the following chart to select the language.

NOTE:

Note: You must press the button or the SOURCE button within 5 seconds to change the language.

Current language	Press (PHONE/SEND) to select	Press SOURCE (PHONE/END) to select
English	Spanish	French
Spanish	English	French
French	English	Spanish

☞ **REVIEW COPY—*2007 Versa*** *(vrs)*
Owners Manual—USA_English *(nna)*
03/06/06—arosenma ☜

5. If you decide not to change the language, do not press either button. After 5 seconds, the VR session will end, and the language will not be changed.

Pairing procedure

NOTE:

The pairing procedure must be performed when the vehicle is stationary. If the vehicle starts moving during the procedure, the procedure will be cancelled.

Main Menu
"Setup" Ⓐ
"Pair Phone" Ⓑ
"New Phone" Ⓒ
Initiate from handset Ⓓ
Name phone Ⓔ
Assign priority Ⓕ
Choose ringtone Ⓖ

1. Press the button on the steering wheel. The system announces the available commands.
2. Say: "Setup" Ⓐ. The system acknowledges the command and announces the next set of available commands.
3. Say: "Pair phone" Ⓑ. The system acknowledges the command and announces the next set of available commands.
4. Say: "New phone" Ⓒ. The system acknowledges the command and asks you to initiate pairing from the phone handset Ⓓ.

   The pairing procedure of the cellular phone varies according to each cellular phone manufacturer. See the cellular phone Owner's Manual for details. You can also visit www.nissan-usa.com/bluetooth for instructions on pairing NISSAN recommended cellular phones.

   When prompted for a PIN code, enter "1234" from the handset. The PIN code "1234" has been assigned by NISSAN and cannot be changed.
5. The system asks you to say a name for the phone Ⓔ.

   If the name is too long or too short, the system tells you, then prompts you for a name again.

   Also, if more than one phone is paired and the name sounds too much like a name already used, the system tells you, then prompts you for a name again.
6. The system asks you to assign a priority level Ⓕ. The priority level determines which phone is active when more than one paired Bluetooth® phone is in the vehicle. Follow the instructions provided by the system or refer to "Setup" later in this section for more information on changing priorities.
7. The system will ask if you would like to select a custom ring tone Ⓖ. Follow the instructions provided by the system or refer to "Setup" later in this section for more information on selecting ringtones.

Making a call by entering a phone number

Main Menu
"Call" Ⓐ
Number (speak digits) Ⓑ
"Dial" Ⓒ

1. Press the button on steering wheel. A tone will sound.
2. Say: "Call" Ⓐ. The system acknowledges the command and announces the next set of available commands.

☞ **REVIEW COPY—*2007 Versa*** *(vrs)*
Owners Manual—USA_English *(nna)*
03/06/06—arosenma ☜

3. Say the number you wish to call Ⓑ. For example, 555-1212 can be said as “five five five one two one two.” See “How to say numbers” earlier in this section for more information.
4. When you have finished speaking the phone number, the system repeats it back and announces the available commands.
5. Say: “Dial” Ⓒ. The system acknowledges the command and makes the call.

For additional command options, see “List of voice commands” later in this section.

Receiving a call

When you hear the ring tone, press the button on the steering wheel.

Once the call has ended, press the SOURCE button on the steering wheel.

NOTE:

If you do not wish to take the call when you hear the ring tone, press the SOURCE button on the steering wheel.

For additional command options, see “List of voice commands” later in this section.

LIST OF VOICE COMMANDS

Main Menu
- “Call”
- “Phone Book”
- “Memo Pad”
- “Setup”

When you press and release the button on the steering wheel, you can choose from the commands on the Main Menu. The following pages describe these commands and the commands in each sub-menu.

Remember to wait for the tone before speaking.

You can say “Help” to hear the list of commands currently available any time the system is waiting for a response.

If you want to end an action without completing it, you can say “Cancel” or “Quit” at any time the system is waiting for a response. The system will end the VR session. Whenever the VR session is cancelled, a double beep is played to indicate you have exited the system.

If you want to go back to the previous command, you can say “Go back” or “Correction” any time the system is waiting for a response.

When you get used to the menus in the system, you can talk ahead by saying more than one command at a time. For example, say, “Call five five five one two one two” or “Memo pad record.”

Also, when you get used to the system responses, you can skip ahead to the tone by pressing the button on the steering wheel. However, if you press the button when the system is waiting for a response from you it will end the VR session.

“Call”

Main Menu
- “Call”
  - Name (speak name) Ⓐ
  - Number (speak digits) Ⓑ
  - “Redial” Ⓒ
  - “Call Back” Ⓓ

Name (speak name) Ⓐ

If you have stored entries in the Phone Book, you can dial a number associated with a name and location.

See “Phone book” later in this section to learn how to store entries.

☞ **REVIEW COPY—*2007 Versa*** *(vrs)*
Owners Manual—USA_English *(nna)*
03/06/06—arosenma ☜

When prompted by the system, say the name of the phone book entry you wish to call. The system acknowledges the name.

If there are multiple locations associated with the name, the system asks you to choose the location.

Once you have confirmed the name and location, the system begins the call.

Number (speak digits) Ⓑ

When prompted by the system, say the number you wish to call. Refer to "How to say numbers" and "Making a call by entering a phone number" earlier in this section for more details.

"Redial" Ⓒ

Use the Redial command to call the last number that was dialed within the vehicle.

NOTE:

The system will not redial the last number dialed by the handset keypad.

The system acknowledges the command, repeats the number and begins dialing.

If a redial number does not exist, the system announces, "There is no number to redial" and ends the VR session.

"Call back" Ⓓ

Use the Call Back command to dial the number of the last incoming call within the vehicle.

The system acknowledges the command, repeats the number and begins dialing.

If a call back number does not exist, the system announces, "There is no number to call back" and ends the VR session.

During a call

During a call there are several command options available. Press the button on the steering wheel to mute the receiving voice and enter commands.

- "Help" — The system announces the available commands.
- "Go back/Correction" — The system announces "Go back," ends the VR session and returns to the call.
- "Cancel/Quit" — The system announces "Cancel," ends the VR session and returns to the call.
- "Send/Enter/Call/Dial" — Use the Send command to enter numbers during a call. For example, if you were directed to dial an extension by an automated system:

  Say: "Send one two three four."

  The system acknowledges the command and sends the tones associated with the numbers. The system then ends the VR session and returns to the call.
- "Transfer call" — Use the Transfer Call command to transfer the call from the Bluetooth® Hands-Free Phone System to the cellular phone when privacy is desired.

  The system announces, "Transfer call. Call transferred to privacy mode." The system then ends the VR session.

  You can also issue the Transfer Call command again to return to a hands-free call through the vehicle.
- "Mute" — Use the Mute command to mute your voice so the other party cannot hear it. Use the mute command again to unmute your voice.

☞ **REVIEW COPY—*2007 Versa*** *(vrs)*
Owners Manual—USA_English *(nna)*
03/06/06—arosenma ☜

NOTE:

If a call is ended or the cellular phone network connection is lost while the Mute feature is on, the Mute feature will be reset to "off" for the next call so the other party can hear your voice.

"Phone book"

NOTE:

Phone book commands are not available when the vehicle is moving.

Main Menu
"Phone Book"
"New Entry" Ⓐ
"Edit" Ⓑ
"Delete" Ⓒ
"List Names" Ⓓ

The Phone Book stores up to 40 names for each phone paired with the system. Each name can have up to 4 locations/phone numbers associated with it.

NOTE:

Each phone has its own separate phone book. You cannot access Phone A's phone book if you are currently connected with Phone B.

"New entry" Ⓐ

Use the New Entry command to store a new name in the system.

When prompted by the system, say the name you would like to give the new entry.

For example, say: "Mary."

If the name is too long or too short, the system tells you, then prompts you for a name again.

Also, if the name sounds too much like a name already stored, the system tells you, then prompts you for a name again.

Once the system accepts the name and you confirm it is correct, the system asks for a location (Home, Office, Mobile or Other).

For example, say: "Home."

The system acknowledges the location and asks for a number.

For example, say: "five five five one two one two." See "How to say numbers" earlier in this section for more information.

The system repeats the number and prompts you for the next command. When you have finished entering numbers, choose "Store."

The system confirms the name, location and number. The system then asks if you would like to store another location for the same name. If you do not wish to store another location, the system ends the VR session.

"Edit" Ⓑ

Use the Edit command to alter an existing phone book entry or to add a 2nd, 3rd or 4th phone number to an existing entry.

When prompted by the system, say the name of the entry you wish to edit.

The system acknowledges the name and asks you for the location you would like to edit.

Say the name of the location. The system acknowledges and asks you for the phone number you would like to store with this location.

See "How to say numbers" earlier in this section for more information.

The system repeats the number and prompts you for the next command. When you have finished entering numbers, choose "Store."

☞ **REVIEW COPY—*2007 Versa*** *(vrs)*
Owners Manual—USA_English *(nna)*
03/06/06—arosenma ☜

The system confirms the name, location and number, then announces that the entry has been stored. The system then ends the VR session.

"Delete" Ⓒ

Use the Delete command to erase one entry from the phone book, all entries from the phone book, the current redial number or the current call back number.

To delete entries from the phone book, say a name or "All entries" when prompted by the system.

The system acknowledges the command and asks you to confirm the deletion.

To delete the current redial number or call back number, say "redial number" or "call back number" when prompted by the system.

If a redial number or a call back number exists, the system deletes them without asking for confirmation.

If there is no number for the entry you are trying to delete, the system says so and ends the VR session.

"List names" Ⓓ

Use the List Names command to hear all the names and locations in the phone book.

The system recites the phone book entries but does not include the actual phone numbers. When the playback of the list is complete the system ends the VR session.

You can stop the playback of the list at any time by pressing the SOURCE button on the steering wheel. The system ends the VR session.

"Memo pad"

Main Menu
- "Memo Pad"
  - "Record" Ⓐ
  - "Play" Ⓑ
  - "Delete" Ⓒ

The Memo Pad records a maximum of 3 voice memos, each up to 20 seconds long.

"Record" Ⓐ

The system announces "Recording" and a tone sounds signaling you to begin.

Speak the information you wish to record clearly. When you are done, press the or SOURCE button on the steering wheel.

A tone sounds and the system announces "Memo recorded." Another tone sounds to end the VR session.

If the memo pad is full, the system asks if you wish to record over the oldest memo.

"Play" Ⓑ

The system plays back all the memos in the order of newest to oldest. The system ends the VR session.

If there are no memos recorded, the system announces "No messages to play." The system ends the VR session.

"Delete" Ⓒ

The Delete command erases all memos. The system asks you to confirm this action before deleting all memos.

"Setup"

Main Menu
- "Setup"
  - "Pair Phone" Ⓐ
  - "List Phone" Ⓑ
  - "Select Phone" Ⓒ
  - "Change Priority" Ⓓ
  - "Delete Phone" Ⓔ
  - "Select Ringtone" Ⓕ
  - "Bluetooth Off" Ⓖ

☞ **REVIEW COPY—*2007 Versa*** *(vrs)*
Owners Manual—USA_English *(nna)*
03/06/06—arosenma ☜

Use the Setup command to change options associated with the Bluetooth® Hands-Free Phone System.

"Pair phone" Ⓐ

Use the Pair Phone command to pair a phone to the Bluetooth® Hands-Free Phone System.

NOTE:

The pairing procedure must be performed when the vehicle is stationary. If the vehicle starts moving during the procedure, the procedure will be cancelled. Also, see "Pairing procedure" earlier in this section for additional information.

Up to 5 phones can be paired. If you try to pair a sixth phone, the system announces that you must first delete one phone or replace an existing phone.

If you try to pair a phone that has already been paired to your vehicle's system, the system announces the name the phone is already using. The pairing procedure will then be cancelled.

When prompted by the system, choose from the following commands:

- "New phone" — Refer to "Pairing a phone" earlier in this section.
- "Replace phone" — The system announces the names of the phones already paired and asks which you would like to replace.

  Once you say the name of the phone you wish to replace, the pairing procedure will begin. Refer to "Pairing procedure" earlier in this section.
- "List phone" – See the description below.

"List phone" Ⓑ

Use the List Phone command to hear the names of the phones currently paired. If no phones are paired, the system announces, "No paired phones to list." The system then ends the VR session.

"Select phone" Ⓒ

Use the Select Phone command to select a phone of lesser priority when two or more phones paired with Bluetooth® Hands-Free Phone System are in the vehicle at the same time.

The system asks you to name the phone and confirm the selection.

Once the selection is confirmed, the selected phone remains active until the ignition switch is turned OFF or you select a new phone.

"Change priority" Ⓓ

Use the Change Priority command to change the priority level of the active phone.

The priority level determines which phone is active when more than one paired Bluetooth® phone is in the vehicle.

The system states the priority level of the active phone and asks for a new priority level (1, 2, 3, 4, 5).

If the new priority level is already being used for another phone, the two phones will swap priority levels.

For example, if the current priority levels are:

Priority Level 1 = Phone A
Priority Level 2 = Phone B
Priority Level 3 = Phone C

and you change the priority level of Phone C to Level 1, then:

Priority Level 1 = Phone C
Priority Level 2 = Phone B
Priority Level 3 = Phone A

"Delete phone" Ⓔ

Use the Delete Phone command to delete a specific phone or all phones from the Bluetooth® Hands-Free Phone System.

☞ **REVIEW COPY—*2007 Versa*** *(vrs)*
Owners Manual—USA_English *(nna)*
03/06/06—arosenma ☜

The system announces the names of the phones already paired with the system and their priority level. The system then gives you the option to delete a specific phone, all phones or listen to the list again.

Once you chose to delete a phone or all phones, the system asks you to confirm this action.

NOTE:

When you delete a phone, the associated phone book for that phone will also be deleted.

"Select ringtone" Ⓕ

Use the Select Ringtone command to select the tone heard in the vehicle when an incoming call is received.

The system announces the name of the active phone and asks you to choose from the following commands:

- "Ringtone" — The system plays a ringtone and asks if you would like to select that tone. If you say no, the system plays the next ringtone available and continues to cycle through the ringtones until you select one or quit.
- "Silent" — The system asks you to confirm your wish to disable the ringtone.

"Bluetooth off" Ⓖ

Use the Bluetooth Off command to turn off the Bluetooth® Hands-Free Phone System.

When the Bluetooth® Hands-Free Phone System is off, you will not be able to make or receive calls using NISSAN Voice Recognition. Also, you will not have access to the Phone Book.

You can still use the Memo Pad and access Setup.

SPEAKER ADAPTATION (SA) MODE

Speaker Adaptation allows up to two out-of-dialect users to train the system to improve recognition accuracy. By repeating a number of commands, the users can create a voice model of their own voice that is stored in the system. The system is capable of storing a different speaker adaptation model for memory A and memory B.

If memory A is available, the system will use memory A to store the model. If memory A is in use and memory B is available, the system will use memory B to store the model. If both of the memory locations are in use, the system will ask the user to select which memory location should be overwritten.

Training procedure

The procedure for training a voice is as follows.

1. Position the vehicle in a reasonably quiet outdoor location.
2. Sit in the driver's seat with the engine running, the parking brake on, and the transmission in P (Park) (AT and CVT models) or N (Neutral) (MT models).
3. Press and hold the button for more than 5 seconds.
4. The system announces: "Press the PHONE/SEND ( ) button for the hands-free phone system to enter the speaker adaptation mode or press the PHONE/END (SOURCE) button to select a different language.
5. Press the button.

   For information on selecting a different language, see "Choosing a language" earlier in this section.
6. Voice memory A or memory B is selected automatically. If both memory locations are already in use, the system will prompt you to overwrite one. Follow the instructions provided by the system.
7. When preparation is complete and you are ready to begin, the press the button.
8. The SA mode will be explained. Follow the instructions provided by the system.

☞ **REVIEW COPY—*2007 Versa*** *(vrs)*
Owners Manual—USA_English *(nna)*
03/06/06—arosenma ☜

9. When training is finished, the system will tell you an adequate number of phrases have been recorded.
10. The system will ask you to say your name. Follow the instructions to register your name.
11. The system will announce that speaker adaptation has been completed and the system is ready.

The SA mode will stop if:

- The button is pressed for more than 5 seconds in SA mode.
- The vehicle begins moving during SA mode.
- The ignition switch is turned to the OFF or LOCK position.

Training phrases

During the SA mode, the system instructs the trainer to say the following phrases. (The system will prompt you for each phrase.)

- phone book new entry
- dial three oh four two nine
- delete call back number
- setup pair phone
- memo pad play
- eight pause nine three two pause seven
- delete all entries
- call seven two four zero nine
- phone book delete entry
- memo pad record
- dial star two one seven oh
- Yes
- No
- select ring tone
- dial eight five six nine two
- Bluetooth on
- setup change priority
- call three one nine oh two
- nine seven pause pause three oh eight
- Cancel
- call back number
- call star two zero nine five
- delete phone
- dial eight three zero five one
- Home
- four three pause two nine pause zero
- delete redial number
- phone book list names
- call eight oh five four one
- Correction
- setup change ring tone
- dial seven four oh one eight
- setup main menu
- Delete
- dial nine seven two six six
- memo pad delete
- call seven six three oh one
- go back
- call five six two eight zero
- dial six six four three seven

TROUBLESHOOTING GUIDE

The system should respond correctly to all voice commands without difficulty. If problems are encountered, try the following solutions.

Where the solutions are listed by number, try each solution in turn, starting with number 1, until the problem is resolved.

☞ **REVIEW COPY—*2007 Versa*** *(vrs)*
Owners Manual—USA_English *(nna)*
03/06/06—arosenma ☜

Symptom	Solution
System fails to interpret the command correctly.	1. Ensure that the command is valid. See “List of voice commands” earlier in this section.
	2. Ensure that the command is spoken after the tone.
	3. Speak clearly without pausing between words and at a level appropriate to the ambient noise level in the vehicle.
	4. Ensure that the ambient noise level is not excessive (for example, windows open or defroster on). NOTE: If it is too noisy to use the phone, it is likely that the voice commands will not be recognized.
	5. If more than one command was said at a time, try saying the commands separately.
	6. If the system consistently fails to recognize commands, the voice training procedure should be carried out to improve the recognition response for the speaker. See “Speaker adaptation (SA) mode” earlier in this section.
The system consistently selects the wrong entry from the phone book.	1. Ensure that the phone book entry name requested matches what was originally stored. This can be confirmed by using the “List Names” command. See “Phone book” earlier in this section.
	2. Replace one of the names being confused with a new name.

☞ **REVIEW COPY—*2007 Versa*** *(vrs)*
Owners Manual—USA_English *(nna)*
03/06/06—arosenma ☜

5 Starting and driving

Precautions when starting and driving 5-2
Exhaust gas (carbon monoxide) 5-2
Three-way catalyst 5-2
Tire pressure monitoring system (TPMS) (if so equipped) 5-3
Avoiding collision and rollover 5-4
Drinking alcohol/drugs and driving 5-5
Ignition switch 5-5
Intelligent Key System (if so equipped) 5-6
Continuously Variable Transmission (CVT) 5-7
Manual transmission 5-8
Key positions 5-9
Nissan vehicle immobilizer system 5-9
Before starting the engine 5-10
Starting the engine 5-10
Driving the vehicle 5-12
Continuously Variable Transmission (CVT) (if so equipped) 5-12
Manual transmission 5-15
Parking brake 5-17
Cruise control (if so equipped) 5-18
Precautions on cruise control 5-18
Cruise control operations 5-18
Break-in schedule 5-19
Increasing fuel economy 5-20
Parking/parking on hills 5-21
Power steering 5-22
Brake system 5-23
Brake precautions 5-23
Anti-lock braking system (ABS) (if so equipped) 5-23
Cold weather driving 5-25
Freeing a frozen door lock 5-25
Anti-freeze 5-25
Battery 5-25
Draining of coolant water 5-25
Tire equipment 5-25
Special winter equipment 5-25
Driving on snow or ice 5-25
Engine block heater (if so equipped) 5-26

☞ **REVIEW COPY—*2007 Versa*** *(vrs)*
Owners Manual—USA_English *(nna)*
03/06/06—arosenma ☜

PRECAUTIONS WHEN STARTING AND DRIVING

⚠ WARNING

- **Do not leave children or adults who would normally require the assistance of others alone in your vehicle. Pets should also not be left alone. They could accidentally injure themselves or others through inadvertent operation of the vehicle. Also, on hot, sunny days, temperatures in a closed vehicle could quickly become high enough to cause severe or possibly fatal injuries to people or animals.**
- **Properly secure all cargo to help prevent it from sliding or shifting. Do not place cargo higher than the seatbacks. In a sudden stop or collision, unsecured cargo could cause personal injury.**

EXHAUST GAS (carbon monoxide)

⚠ WARNING

- **Do not breathe exhaust gases; they contain colorless and odorless carbon monoxide. Carbon monoxide is dangerous. It can cause unconsciousness or death.**
- **If you suspect that exhaust fumes are entering the vehicle, drive with all windows fully open, and have the vehicle inspected immediately.**
- **Do not run the engine in closed spaces such as a garage.**
- **Do not park the vehicle with the engine running for any extended length of time.**
- **Keep the rear hatch closed while driving, otherwise exhaust gases could be drawn into the passenger compartment. If you must drive with the rear hatch open, follow these precautions:**
  1. **Open all the windows.**
  2. **Turn the air recirculation mode off and set the fan speed control to the highest level to circulate the air.**
- **The exhaust system and body should be inspected by a qualified mechanic whenever:**
  a. **The vehicle is raised for service.**
  b. **You suspect that exhaust fumes are entering into the passenger compartment.**
  c. **You notice a change in the sound of the exhaust system.**
  d. **You have had an accident involving damage to the exhaust system, underbody, or rear of the vehicle.**

THREE-WAY CATALYST

The three-way catalyst is an emission control device installed in the exhaust system. Exhaust gases in the three-way catalyst are burned at high temperatures to help reduce pollutants.

⚠ WARNING

- **The exhaust gas and the exhaust system are very hot. Keep people, animals or flammable materials away from the exhaust system components.**
- **Do not stop or park the vehicle over flammable materials such as dry grass, waste paper or rags. They may ignite and cause a fire.**

⚠ CAUTION

- **Do not use leaded gasoline. Deposits from leaded gasoline will seriously reduce the three-way catalyst's ability to help reduce exhaust pollutants.**

☞ **REVIEW COPY—*2007 Versa*** *(vrs)*
Owners Manual—USA_English *(nna)*
03/06/06—arosenma ☜

- **Keep your engine tuned up. Malfunctions in the ignition, fuel injection, or electrical systems can cause overrich fuel flow into the three-way catalyst, causing it to overheat. Do not keep driving if the engine misfires, or if noticeable loss of performance or other unusual operating conditions are detected. Have the vehicle inspected promptly by a NISSAN dealer.**
- **Avoid driving with an extremely low fuel level. Running out of fuel could cause the engine to misfire, damaging the three-way catalyst.**
- **Do not race the engine while warming it up.**
- **Do not push or tow your vehicle to start the engine.**

TIRE PRESSURE MONITORING SYSTEM (TPMS) (if so equipped)

Each tire, including the spare (if provided), should be checked monthly when cold and inflated to the inflation pressure recommended by the vehicle manufacturer on the vehicle placard or tire inflation pressure label. (If your vehicle has tires of a different size than the size indicated on the vehicle placard or tire inflation pressure label, you should determine the proper tire inflation pressure for those tires.)

As an added safety feature, your vehicle has been equipped with a Tire Pressure Monitoring System (TPMS) that illuminates a low tire pressure telltale when one or more of your tires is significantly underinflated. Accordingly, when the low tire pressure telltale illuminates, you should stop and check your tires as soon as possible, and inflate them to the proper pressure. Driving on a significantly underinflated tire causes the tire to overheat and can lead to tire failure. Underinflation also reduces fuel efficiency and tire tread life, and may affect the vehicle's handling and stopping ability.

Please note that the TPMS is not a substitute for proper tire maintenance, and it is the driver's responsibility to maintain correct tire pressure, even if underinflation has not reached the level to trigger illumination of the TPMS low tire pressure telltale.

Your vehicle has also been equipped with a TPMS malfunction indicator to indicate when the system is not operating properly. The TPMS malfunction indicator is combined with the low tire pressure telltale. When the system detects a malfunction, the telltale will flash for approximately one minute and then remain continuously illuminated. This sequence will continue upon subsequent vehicle start-ups as long as the malfunction exists. When the malfunction indicator is illuminated, the system may not be able to detect or signal low tire pressure as intended. TPMS malfunctions may occur for a variety of reasons, including the installation of replacement or alternate tires or wheels on the vehicle that prevent the TPMS from functioning properly. Always check the TPMS malfunction telltale after replacing one or more tires or wheels on your vehicle to ensure that the replacement or alternate tires and wheels allow the TPMS to continue to function properly.

Additional information:

- The TPMS does not monitor the tire pressure of the spare tire.
- The TPMS will activate only when the vehicle is driven at speeds above 16 MPH (25 km/h). Also, this system may not detect a sudden drop in tire pressure (for example a flat tire while driving).
- Tire pressure rises and falls depending on the heat caused by the vehicle's operation and the outside temperature. Low outside temperature can lower the temperature of the air inside the tire which can cause a lower tire inflation pressure. This may cause the low tire pressure warning light to illuminate. If the warning light illuminates in low

☞ **REVIEW COPY—*2007 Versa*** *(vrs)*
Owners Manual—USA_English *(nna)*
03/06/06—arosenma ☜

ambient temperature, check the tire pressure for all four tires.

For additional information, see “Low tire pressure warning light” in the “Instruments and controls” section, “Tire pressure monitoring system (TPMS)” in the “In case of emergency” section.

⚠ WARNING

- **If the low tire pressure warning light illuminates while driving, avoid sudden steering maneuvers or abrupt braking, reduce vehicle speed, pull off the road to a safe location and stop the vehicle as soon as possible. Serious vehicle damage could occur and may lead to an accident and could result in serious personal injury. Check the tire pressure for all four tires. Adjust the tire pressure to the recommended COLD tire pressure shown on the Tire and Loading Information label to turn the low tire pressure warning light OFF. If you have a flat tire, replace it with a spare tire as soon as possible. (See “Flat tire” in the “In case of emergency” section for changing a flat tire.)**
- **When a spare tire is mounted or a wheel is replaced the TPMS will not function and the low tire pressure warning light will flash. Contact your NISSAN dealer as soon as possible for tire replacement and/or system resetting.**
- **Replacing tires with those not originally specified by NISSAN could affect the proper operation of the TPMS.**
- **Do not inject any tire liquid or aerosol tire sealant into the tires, as this may cause a malfunction of the tire pressure sensors.**

⚠ CAUTION

Do not place metalized film or any metal parts (antenna, etc.) on the windows. This may cause poor reception of the signals from the tire pressure sensors, and the TPMS will not function properly.

FCC Notice:

Changes or modifications not expressly approved by the party responsible for compliance could void the user’s authority to operate the equipment.

This device complies with Part 15 of the FCC Rules and RSS-210 of Industry Canada.

Operation is subject to the following two conditions: (1) This device may not cause harmful interface, and (2) this device must accept any interference received, including interference that may cause undesired operation of the device.

AVOIDING COLLISION AND ROLLOVER

⚠ WARNING

Failure to operate this vehicle in a safe and prudent manner may result in loss of control or an accident.

Be alert and drive defensively at all times. Obey all traffic regulations. Avoid excessive speed, high speed cornering, or sudden steering maneuvers, because these driving practices could cause you to lose control of your vehicle. **As with any vehicle, loss of control could result in a collision with other vehicles or objects, or cause the vehicle to roll over, particularly if the loss of control causes the vehicle to slide sideways.** Be attentive at all times, and avoid driving when tired. Never drive when under the influence of alcohol or drugs (including pre-

☞ **REVIEW COPY—*2007 Versa*** *(vrs)*
Owners Manual—USA_English *(nna)*
03/06/06—arosenma ☜

scription or over-the-counter drugs which may cause drowsiness). Always wear your seat belt as outlined in the “Safety – Seats, seat belts and supplemental restraint system” section of this manual, and also instruct your passengers to do so.

Seat belts help reduce the risk of injury in collisions and rollovers. **In a rollover crash, an unbelted or improperly belted person is significantly more likely to be injured or killed than a person properly wearing a seat belt.**

DRINKING ALCOHOL/DRUGS AND DRIVING

⚠ WARNING

Never drive under the influence of alcohol or drugs. Alcohol in the bloodstream reduces coordination, delays reaction time and impairs judgement. Driving after drinking alcohol increases the likelihood of being involved in an accident injuring yourself and others. Additionally, if you are injured in an accident, alcohol can increase the severity of the injury.

NISSAN is committed to safe driving. However, you must choose not to drive under the influence of alcohol. Every year thousands of people are injured or killed in alcohol-related accidents. Although the local laws vary on what is considered to be legally intoxicated, the fact is that alcohol affects all people differently and most people underestimate the effects of alcohol.

Remember, drinking and driving don’t mix! And that is true for drugs, too (over-the-counter, prescription, and illegal drugs). Don’t drive if your ability to operate your vehicle is impaired by alcohol, drugs, or some other physical condition.

⚠ WARNING

Never remove or turn the key to the LOCK position while driving. The steering wheel will lock. This may cause the driver to lose control of the vehicle and could result in serious vehicle damage or personal injury.

☞ **REVIEW COPY—*2007 Versa*** *(vrs)*
Owners Manual—USA_English *(nna)*
03/06/06—arosenma ☜

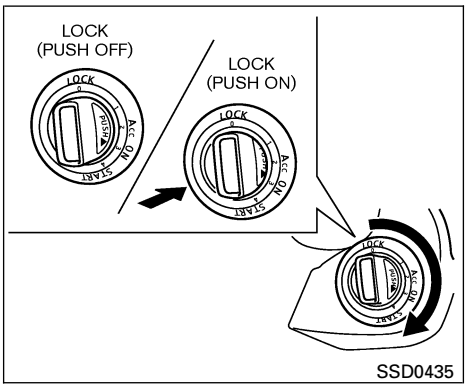

CVT models

INTELLIGENT KEY SYSTEM (if so equipped)

The Intelligent Key system can operate the ignition switch without taking the key out from your pocket or purse. The operating environment and/or conditions may affect the Intelligent Key system operation.

⚠ CAUTION

- **Be sure to carry the Intelligent Key with you when operating the vehicle.**

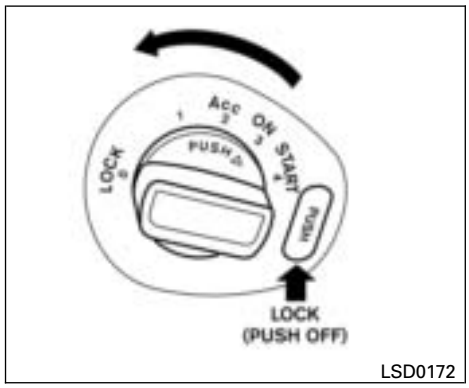

M/T models

- **Never leave the Intelligent Key inside the vehicle when you leave the vehicle.**
- **If the vehicle battery is discharged the ignition switch cannot be moved from the "LOCK" position and if the steering lock is engaged, the steering wheel cannot be moved. Charge the battery as soon as possible. (See "JUMP STARTING" in the "In case of emergency" section of this manual.)**

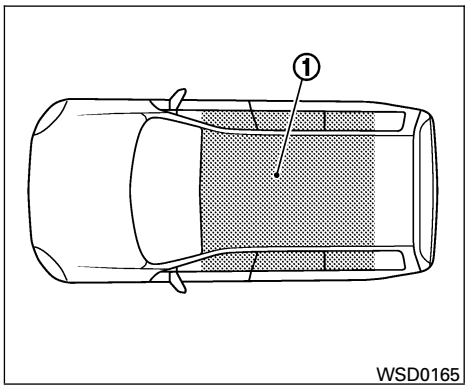

Operating range

The Intelligent Key functions can only be used when the Intelligent Key is within the specified operating range.

When the Intelligent Key battery is almost discharged or strong radio waves are present near the operating location, the Intelligent Key system's operating range becomes narrower and may not function properly.

If the Intelligent Key is within the operating range, it is possible for anyone, even someone who does not carry the Intelligent Key, to turn the ignition switch to start the engine.

☞ **REVIEW COPY—*2007 Versa*** *(vrs)*
Owners Manual—USA_English *(nna)*
03/06/06—arosenma ☜

The operating range of the engine start function is inside of the vehicle ①.

- The luggage area is not included in the operating range, but the Intelligent Key may function.
- If the Intelligent Key is placed on the instrument panel, rear parcel shelf, inside the glove box, storage bin or door pocket, the Intelligent Key may not function.
- If the Intelligent Key is placed near the door or window outside the vehicle, the Intelligent Key may function.

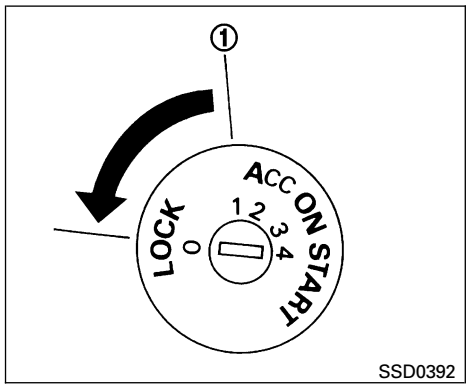

Without Intelligent Key system

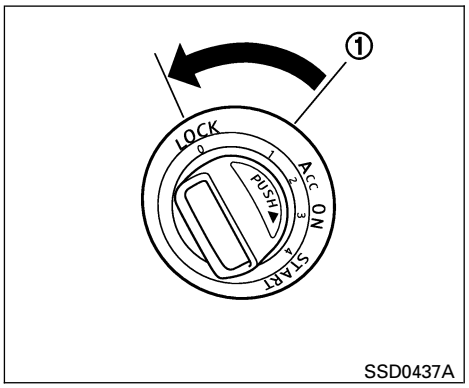

With Intelligent Key system

CONTINUOUSLY VARIABLE TRANSMISSION (CVT)

The ignition lock is designed so that the ignition switch cannot be turned to the LOCK position until the selector lever is moved to the P (Park) position. When moving the ignition switch to the LOCK position, to remove the key from the ignition switch, make sure the selector lever is in the P (Park) position.

When the ignition switch cannot be turned to the LOCK position:

☞ **REVIEW COPY—*2007 Versa*** *(vrs)*
Owners Manual—USA_English *(nna)*
03/07/06—cathy ☜

1. Shift the selector lever to the P (Park) position.
2. Turn the ignition switch slightly in the ON direction.
3. Turn the ignition switch to the LOCK position.
4. Remove the key if it is inserted in the ignition switch.

If the ignition switch is turned to the LOCK position, the selector lever cannot be moved from the P (Park) position.

The shift selector lever can be moved if the ignition switch is in the ON position and the foot brake pedal is depressed.

There is an OFF position ① between the LOCK and ACC positions. The OFF position is indicated by a "1" on the key cylinder. When the ignition is in the OFF position, the steering wheel is not locked.

To lock the steering wheel:

1. Turn the ignition switch to the LOCK position.
2. Remove the key, if it is inserted in the ignition switch.
3. Turn the steering wheel 1/8 of a turn clockwise from the straight up position.

To unlock the steering wheel:

1. Insert the key into the ignition switch, if necessary.
2. Gently turn the ignition switch while rotating the steering wheel slightly right and left.

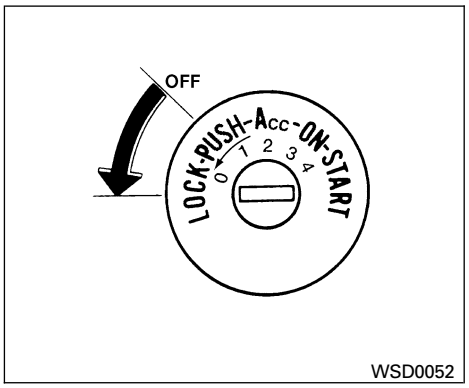

Type A

MANUAL TRANSMISSION

The ignition switch includes a device that helps prevent accidental removal of the key while driving.

The key can only be removed when the ignition switch is in the LOCK position.

Type A models without Intelligent Key: To turn the ignition key to the LOCK position from the ACC or ON position, turn the key to OFF, push the key in, then turn the key to LOCK.

☞ **REVIEW COPY—*2007 Versa*** *(vrs)*
Owners Manual—USA_English *(nna)*
03/06/06—arosenma ☜

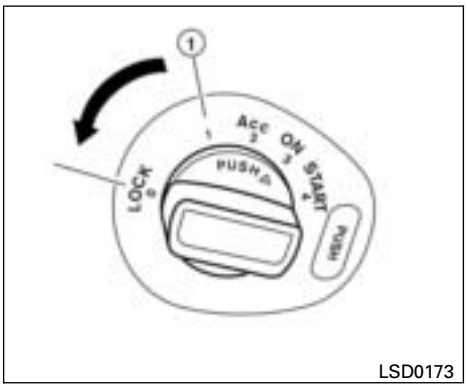

Type B

Type B models with Intelligent Key: The ignition lock is designed so that the switch can only be turned to the LOCK position when the PUSH release button has been pressed.

NOTE:

- The Intelligent Key lock warning light blinks and the buzzer sounds when the ignition switch is turned to the LOCK position and the ignition PUSH release button has not been pressed completely. See “Intelligent Key lock warning light” in the “Instruments and controls” section of this manual for further details regarding the functionality of the Intelligent Key lock warning light.
- When the mechanical key is being used, the ignition PUSH release button has to be pressed in order to turn the ignition switch to the LOCK position although the Intelligent Key lock warning light will not blink and the buzzer will not sound.

To lock the steering wheel

In the LOCK position, turn the steering wheel 1/8 of a turn clockwise from the straight up position.

To unlock the steering wheel

Press the brake pedal, push the ignition switch and turn it gently while rotating the steering wheel slightly right and left.

KEY POSITIONS

LOCK: Normal parking position (0)

Intelligent Key system:

PUSH OFF- The steering lock can only be locked at this position.

PUSH ON- The ignition switch will be unlocked while carrying the Intelligent Key.

OFF: (Manual transmission model) (1)

The engine can be turned off without locking the steering wheel.

ACC: (Accessories) (2)

This position activates electrical accessories such as the radio when the engine is not running.

ON: Normal operating position (3)

This position turns on the ignition system and the electrical accessories.

START: (4)

This position starts the engine. As soon as the engine has started, release the key. It automatically returns to the ON position.

NISSAN VEHICLE IMMOBILIZER SYSTEM

The NISSAN Vehicle Immobilizer System will not allow the engine to start without the use of the registered key.

If the engine fails to start using a registered key (for example, when interference is caused by another registered key, an automated toll road device or automatic payment device on the key ring), restart the engine using the following procedures:

1. Leave the ignition switch in the ON position for approximately 5 seconds.

☞ **REVIEW COPY—*2007 Versa*** *(vrs)*
Owners Manual—USA_English *(nna)*
03/06/06—arosenma ☜

2. Turn the ignition switch to the OFF or LOCK position, and wait approximately 10 seconds.
3. Repeat steps 1 and 2.
4. Restart the engine while holding the device (which may have caused the interference) separate from the registered key.

If the no start condition re-occurs, NISSAN recommends placing the registered key on a separate key ring to avoid interference from other devices.

BEFORE STARTING THE ENGINE

- Make sure the area around the vehicle is clear.
- Check fluid levels such as engine oil, coolant, brake and clutch fluid, and window washer fluid as frequently as possible, or at least whenever you refuel.
- Check that all windows and lights are clean.
- Visually inspect tires for their appearance and condition. Also check tires for proper inflation.
- Lock all doors.
- Position seat and adjust head restraints.
- Adjust inside and outside mirrors.
- Fasten seat belts and ask all passengers to do likewise.
- Check the operation of warning lights when the key is turned to the ON (3) position. See "Warning/indicator lights and audible reminders" in the "Instruments and controls" section of this manual.

STARTING THE ENGINE

1. Apply the parking brake.
2. **CVT model:**

   Move the shift selector lever to P (Park) or N (Neutral). P (Park) is recommended.

   The shift selector lever cannot be moved out of P (Park) and into any of the other gear positions if the ignition key is turned to the OFF position or if the key is removed from the ignition switch.

   The starter is designed not to operate if the shift selector lever is in any of the driving positions.

   Manual transmission model:

   Move the shift lever to N (Neutral). Depress the clutch pedal to the floor while cranking the engine.

   The starter is designed not to operate unless the clutch pedal is fully depressed.

   Intelligent Key system models: Slowly "PUSH ON" the ignition switch. When the Intelligent Key system warning light P SHIFT in the meter illuminates in green, the ignition switch can be turned.

☞ **REVIEW COPY—*2007 Versa*** *(vrs)*
Owners Manual—USA_English *(nna)*
03/06/06—arosenma ☜

The Intelligent Key must be carried when operating the ignition switch.

When the Intelligent Key system warning light (CVT models) or the Intelligent Key lock warning light (M/T models) in the meter blinks in red and the inside warning buzzer emits a short beep, be sure that the selector lever is in the "P" (Park) position and the ignition switch is securely returned to the "LOCK" position.

The Intelligent Key system warning light (CVT models) or the Intelligent Key lock warning light (M/T models) blinking in red, turns off by performing the following operations:

- Return the ignition switch to the "LOCK" position.
- Turn the ignition switch to the "ACC" position.

When the buzzer beeps 4 times continuously, check for the following:

- The ignition switch is returned to the "LOCK" position.
- The mechanical key is not inserted into the ignition switch.

The inside warning buzzer stops when one of the following is performed:

- Return the ignition switch to the "LOCK" position.
- Remove the mechanical key from the ignition switch.
- Close the doors.

3. Crank the engine **with your foot off the accelerator pedal** by turning the ignition key to START. Release the key when the engine starts. If the engine starts, but fails to run, repeat the above procedure.
   - If the engine is very hard to start in extremely cold weather or when restarting, depress the accelerator pedal a little (approximately 1/3 to the floor) and hold it and then crank the engine. Release the key and the accelerator pedal when the engine starts.
   - If the engine is very hard to start because it is flooded, depress the accelerator pedal all the way to the floor and hold it. Crank the engine for 5-6 seconds. After cranking the engine, release the accelerator pedal. Crank the engine **with your foot off the accelerator pedal** by turning the ignition key to START. Release the key when the engine starts. If the engine starts, but fails to run, repeat the above procedure.

⚠ CAUTION

Do not operate the starter for more than 15 seconds at a time. If the engine does not start, turn the key off and wait 10 seconds before cranking again, otherwise the starter could be damaged.

4. **Warm-up**

   Allow the engine to idle for at least 30 seconds after starting. Do not race the engine while warming it up. Drive at moderate speed for a short distance first, especially in cold weather.

☞ **REVIEW COPY—*2007 Versa*** *(vrs)*
Owners Manual—USA_English *(nna)*
03/06/06—arosenma ☜

CONTINUOUSLY VARIABLE TRANSMISSION (CVT) (if so equipped)

⚠ WARNING

- **Do not depress the accelerator pedal while shifting from P (Park) or N (Neutral) to R (Reverse), or L (Low). Always depress the brake pedal until shifting is completed. Failure to do so could cause you to lose control and have an accident.**
- **Cold engine idle speed is high, so use caution when shifting into a forward or reverse gear before the engine has warmed up.**
- **Do not downshift abruptly on slippery roads. This may cause a loss of control.**
- **Never shift to P (Park) or R (Reverse) while the vehicle is moving. This could cause an accident.**

⚠ CAUTION

When stopping the vehicle on an uphill grade, do not hold the vehicle by depressing the accelerator pedal. The foot brake should be used for this purpose.

The CVT in your vehicle is electronically controlled to produce maximum power and smooth operation.

The recommended operating procedures for this transmission are shown on the following pages. Follow these procedures for maximum vehicle performance and driving enjoyment.

Starting the vehicle

1. After starting the engine, fully depress the foot brake pedal before attempting to move the shift selector lever out of the P (Park) position.
2. Keep the foot brake pedal depressed and move the shift selector lever into a driving gear.
3. Release the foot brake, then gradually start the vehicle in motion.

The CVT is designed so the foot brake pedal MUST be depressed before shifting from P (Park) to any drive position while the ignition switch is in the ON position.

The shift selector lever cannot be moved out of P (Park) and into any of the other gear positions if the ignition key is turned to the LOCK, OFF or ACC position or if the key is removed.

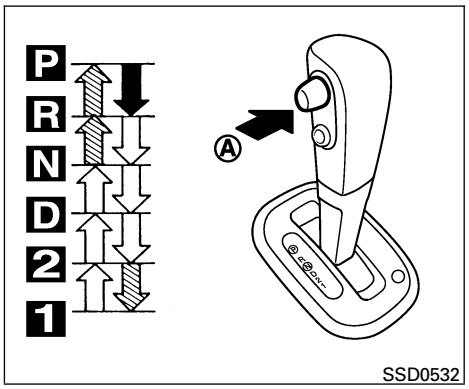

To move the selector lever:

- ➡ Push the button Ⓐ while depressing the brake pedal
- ⇨ Push the button Ⓐ to shift
- ⇨ Shift without pushing button Ⓐ

Shifting

After starting the engine, fully depress the brake pedal and move the shift selector lever out of the P (Park) position.

☞ **REVIEW COPY—*2007 Versa*** *(vrs)*
Owners Manual—USA_English *(nna)*
03/07/06—cathy ☜

⚠ WARNING

Apply the parking brake if the selector lever is in any position while the engine is not running. Failure to do so could cause the vehicle to move unexpectedly or roll away and result in serious personal injury or property damage.

If the key is turned to the OFF or ACC position for any reason while the vehicle is in N (Neutral), or any D (Drive) position, the shift selector lever cannot be moved to P (Park). Additionally, the key cannot be turned to the LOCK position and be removed from the ignition switch. If this occurs, perform the following steps:

1. Apply the parking brake when the vehicle is stopped.
2. Turn the key to the ON position.
3. Depress the foot brake pedal.
4. Move the shift selector lever to P (Park) or N (Neutral) to restart the vehicle (P is preferred). Move the shift selector lever to P (Park) to park the vehicle and turn the ignition key to the LOCK position to remove the key.

P (Park):

Use this selector position when the vehicle is parked or when starting the engine. Make sure the vehicle is completely stopped. **The brake pedal must be depressed and the selector lever button pushed in to move the selector lever from the N (Neutral) or any drive position to P (Park).** Apply the parking brake. When parking on a hill, apply the parking brake first, then shift the selector lever into the P (Park) position.

R (Reverse):

⚠ CAUTION

Use this position only when the vehicle is completely stopped.

Use this position to back up. Make sure the vehicle is completely stopped before selecting R (Reverse) position. The vehicle speed in R (Reverse) is governed at 15 MPH (25 km/h). Do not exceed 15 MPH (25 km/h) in the R (Reverse) position. **The brake pedal must be depressed and the selector lever button pushed in to move the selector lever from P (Park), N (Neutral) or any drive position to R (Reverse).**

N (Neutral):

Neither forward nor reverse gear is engaged. The engine can be started in this position. You may shift to N (Neutral) and restart a stalled engine while the vehicle is moving.

D (Drive):

Use this position for all normal forward driving.

L (Low):

Use this position for maximum engine braking on steep downhill gradients/climbing steep slopes and whenever approaching sharp bends. Do not use the L position in any other circumstances.

☞ **REVIEW COPY—*2007 Versa*** *(vrs)*
Owners Manual—USA_English *(nna)*
03/15/06—cathy ☜

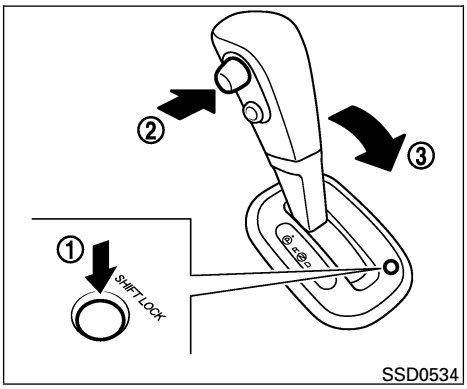

Shift lock release

If the battery is discharged, the shift selector lever may not be moved from the P (Park) position even with the brake pedal depressed and the shift selector lever button pushed.

To move the shift selector lever, release the shift lock and push the shift selector lever button. The shift selector lever can be moved to N (Neutral). However, the steering wheel will be locked unless the ignition switch is turned to the ON position.

To release the shift lock, complete the following procedure:

1. Turn the ignition key to the LOCK position and remove the key.
2. Apply the parking brake.
3. Depress the shift lock release button ①.
4. Push and hold the shift selector lever button ② and move the shift selector lever ③ to N (Neutral) position while holding down the shift lock release button.
5. Turn the key to the ON position to unlock the steering wheel. Now the vehicle may be moved to the desired location.

If the shift selector lever cannot be moved out of P (Park), have a NISSAN dealer check the CVT system as soon as possible.

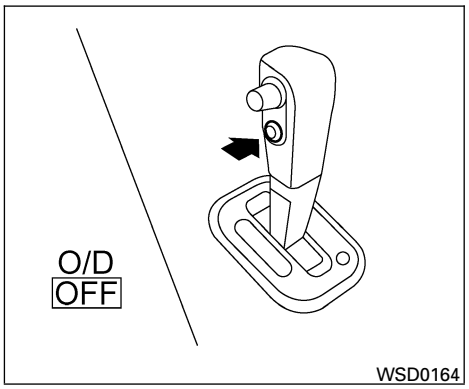

Overdrive (O/D) OFF switch

When the O/D OFF switch is pushed with the selector lever in the D (Drive) position, the O/D OFF light in the instrument panel illuminates. See “Overdrive off indicator light” in the “Instruments and controls” section of this manual.

Use the Overdrive off mode when you need improved engine braking.

To turn off the Overdrive off mode, push the O/D OFF switch again. The O/D OFF indicator light will turn off.

Each time the engine is started, or when the selector lever is shifted to any position other than

☞ **REVIEW COPY—*2007 Versa*** *(vrs)*
Owners Manual—USA_English *(nna)*
03/06/06—arosenma ☜

D (Drive), the Overdrive off mode will be automatically turned off.

Accelerator downshift — in D position —

For passing or hill climbing, depress the accelerator pedal to the floor. This shifts the transmission down into a lower gear, depending on the vehicle speed.

Fail-safe

When the fail-safe operation occurs, the CVT will not be shifted into the selected driving position.

If the vehicle is driven under extreme conditions, such as excessive wheel spinning and subsequent hard braking, the fail-safe system may be activated. The MIL may come on to indicate the fail-safe mode is activated, see "Malfunction indicator lamp (MIL)" in the "Instrument and controls" section. This will occur even if all electrical circuits are functioning properly. In this case, turn the ignition switch to the OFF position and wait for 10 seconds. Then turn the switch back to the ON position. The vehicle should return to its normal operating condition. If it does not return to its normal operating condition, have a NISSAN dealer check the transmission and repair if necessary.

⚠ WARNING

When the high fluid temperature protection mode or fail-safe operation occurs, vehicle speed may be gradually reduced. The reduced speed may be lower than other traffic, which could increase the chance of a collision. Be especially careful when driving. If necessary, pull to the side of the road at a safe place and allow the transmission to return to normal operation, or have it repaired if necessary.

MANUAL TRANSMISSION

⚠ WARNING

- **Do not downshift abruptly on slippery roads. This may cause a loss of control.**
- **Do not over-rev the engine when shifting to a lower gear. This may cause a loss of control or engine damage.**

⚠ CAUTION

- **Do not rest your foot on the clutch pedal while driving. This may cause clutch damage.**
- **Fully depress the clutch pedal before shifting to help prevent transmission damage.**
- **Stop your vehicle completely before shifting into R (Reverse).**
- **When the vehicle is stopped with the engine running (for example, at a stop light), shift to N (Neutral) and release the clutch pedal with the foot brake applied.**

☞ **REVIEW COPY—*2007 Versa*** *(vrs)*
Owners Manual—USA_English *(nna)*
03/06/06—arosenma ☜

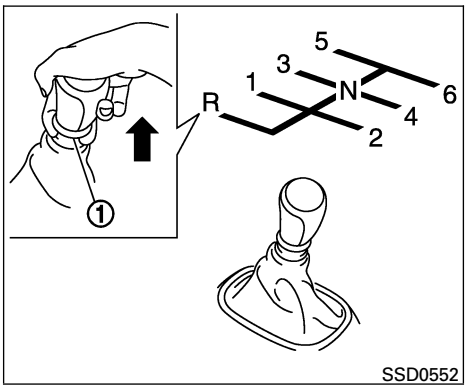

Shifting

To change gears, or when upshifting or downshifting, depress the clutch pedal fully, shift into the appropriate gear, then release the clutch slowly and smoothly.

To ensure smooth gear changes, fully depress the clutch pedal before operating the shift lever. If the clutch pedal is not fully depressed before the transmission is shifted, a gear noise may be heard. Transmission damage may occur.

Start the vehicle in 1st gear and shift to 2nd, 3rd, 4th and 5th up to 6th gear in sequence according to vehicle speed.

To back up, lift up on the shift lever ring ① and then move it to the R (Reverse) position after stopping the vehicle completely.

The shift lever ring returns to its original position when the shift lever is moved to the "N" (Neutral) position.

If it is difficult to move the shift lever into R (Reverse) or 1 (1st), shift into N (Neutral), then release the clutch pedal. Depress the clutch pedal again and shift into R (Reverse) or 1 (1st).

Suggested maximum speed in each gear

Downshift to a lower gear if the engine is not running smoothly, or if you need to accelerate.

Do not exceed the maximum suggested speed (shown below) in any gear. For level road driving, use the highest gear suggested for that speed. Always observe posted speed limits, and drive according to the road conditions, which will ensure safe operation. Do not over-rev the engine when shifting to a lower gear as it may cause engine damage or loss of vehicle control.

GEAR	MPH (km/h)
1st	29 (47)
2nd	51 (83)
3rd	74 (120)
4th	—
5th	—
6th	—

☞ **REVIEW COPY—*2007 Versa*** *(vrs)*
Owners Manual—USA_English *(nna)*
03/06/06—arosenma ☜

PARKING BRAKE

⚠ WARNING

- **Be sure the parking brake is fully released before driving. Failure to do so can cause brake failure and lead to an accident.**
- **Do not release the parking brake from outside the vehicle.**
- **Do not use the gear shift in place of the parking brake. When parking, be sure the parking brake is fully engaged.**
- **Do not leave children unattended in a vehicle. They could release the parking brake and cause an accident.**

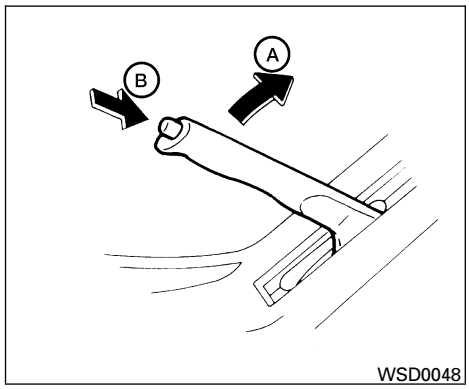

To engage: Pull the lever up Ⓐ.

To release:

1. Firmly apply the foot brake.
2. **Manual transmission models:**

   Place the shift lever in the N (Neutral) position.

   Automatic transmission models:

   Move the shift selector lever to the P (Park) position.
3. While pulling up on the parking brake lever slightly, push the button and lower completely Ⓑ.
4. Before driving, be sure the brake warning light goes out.

☞ **REVIEW COPY—*2007 Versa*** *(vrs)*
Owners Manual—USA_English *(nna)*
03/06/06—arosenma ☜

CRUISE CONTROL (if so equipped)

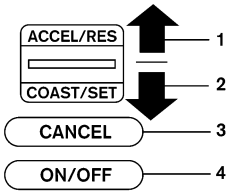

1. ACCEL/RES switch
2. COAST/SET switch
3. CANCEL switch
4. ON/OFF switch

PRECAUTIONS ON CRUISE CONTROL

- If the cruise control system malfunctions, it cancels automatically. The SET indicator light in the instrument panel then blinks to warn the driver.
- If the SET indicator light blinks, turn the cruise control switch off and have the system checked by a NISSAN dealer.
- The SET indicator light may blink when the cruise control switch is turned ON while pushing the ACCEL/RES, COAST/SET, or CANCEL switch. To properly set the cruise control system, use the following procedures.

⚠ WARNING

Do not use the cruise control when driving under the following conditions:

- **When it is not possible to keep the vehicle at a set speed.**
- **In heavy traffic or in traffic that varies in speed.**
- **On winding or hilly roads.**
- **On slippery roads (rain, snow, ice, etc.).**
- **In very windy areas.**

Doing so could cause a loss of vehicle control and result in an accident.

⚠ CAUTION

On manual transmission models, do not shift into N (Neutral) without depressing the clutch pedal when the cruise control is set. Should this occur, depress the clutch pedal and turn the main switch off immediately. Failure to do so may cause engine damage.

CRUISE CONTROL OPERATIONS

The cruise control allows driving at a speed between 25 - 89 MPH (40 - 144 km/h) without keeping your foot on the accelerator pedal.

To turn on the cruise control, push the main switch. The CRUISE indicator light in the instrument panel comes on.

To set cruising speed, accelerate the vehicle to the desired speed, push the COAST/SET switch and release it. The SET indicator light in the instrument panel comes on. Take your foot off the accelerator pedal. Your vehicle maintains the set speed.

- **To pass another vehicle,** depress the accelerator pedal. When you release the pedal, the vehicle returns to the previously set speed.

☞ **REVIEW COPY—*2007 Versa*** *(vrs)*
Owners Manual—USA_English *(nna)*
03/06/06—arosenma ☜

- The vehicle may not maintain the set speed when going up or down steep hills. If this happens, drive without the cruise control.

To cancel the preset speed, use one of the following three methods.

- Push the CANCEL button; the SET indicator light in the instrument panel goes out.
- Tap the brake pedal; the SET indicator light goes out.
- Turn the main switch off. Both the CRUISE indicator light and SET indicator light in the instrument panel go out.

The cruise control is automatically canceled and the SET light in the instrument panel goes out if:

- you depress the brake or clutch pedal while pushing the ACCEL/RES or SET/COAST switch. The preset speed is deleted from memory.
- the vehicle slows down more than 8 MPH (13 km/h) below the set speed.
- you depress the clutch pedal (manual transmission), or move the shift selector lever to N (Neutral) (CVT).

To reset at a faster cruising speed, use one of the following three methods.

- Depress the accelerator pedal. When the vehicle attains the desired speed, push and release the COAST/SET switch.
- Push and hold the ACCEL/RES switch. When the vehicle attains the speed you desire, release the switch.
- Push and release the ACCEL/RES switch. Each time you do this, the set speed increases by about 1 MPH (1.6 km/h).

To reset at a slower cruising speed, use one of the following three methods.

- Lightly tap the brake pedal. When the vehicle attains the desired speed, push the COAST/SET switch and release it.
- Push and hold the COAST/SET switch. Release the switch when the vehicle slows to the desired speed.
- Push and release the COAST/SET switch. Each time you do this, the set speed decreases by about 1 MPH (1.6 km/h).

To resume the preset speed, push and release the ACCEL/RES switch. The vehicle returns to the last set cruising speed when the vehicle speed is over 25 MPH (40 km/h).

⚠ CAUTION

During the first 1,200 miles (2,000 km), follow these recommendations to obtain maximum engine performance and ensure the future reliability and economy of your new vehicle. Failure to follow these recommendations may result in shortened engine life and reduced engine performance.

- Avoid driving for long periods at constant speed, either fast or slow, and do not run the engine over 4,000 rpm.
- Do not accelerate at full throttle in any gear.
- Avoid quick starts.
- Avoid hard braking as much as possible.

☞ **REVIEW COPY—*2007 Versa*** *(vrs)*
Owners Manual—USA_English *(nna)*
03/06/06—arosenma ☜

INCREASING FUEL ECONOMY

- Accelerate slowly and smoothly. Maintain cruising speeds with a constant accelerator position.
- Drive at moderate speeds on the highway. Driving at high speed lowers fuel economy.
- Avoid unnecessary stopping and braking. Maintain a safe distance behind other vehicles.
- Use a proper gear range which suits road conditions. On level roads, shift into high gear as soon as possible.
- Avoid unnecessary engine idling.
- Keep your engine tuned up.
- Follow the recommended periodic maintenance schedule.
- Keep the tires inflated to the correct pressure. Low tire pressure increases tire wear and lowers fuel economy.
- Keep the wheels in correct alignment. Improper alignment increases tire wear and lowers fuel economy.
- Air conditioner operation lowers fuel economy. Use the air conditioner only when necessary.
- When cruising at highway speeds, it is more economical to use the air conditioner and leave the windows closed to reduce drag.
- Use the recommended viscosity engine oil. See “Engine oil and oil filter recommendation” in “Technical and consumer information” later in this manual.

☞ **REVIEW COPY—*2007 Versa*** *(vrs)*
Owners Manual—USA_English *(nna)*
03/06/06—arosenma ☜

PARKING/PARKING ON HILLS

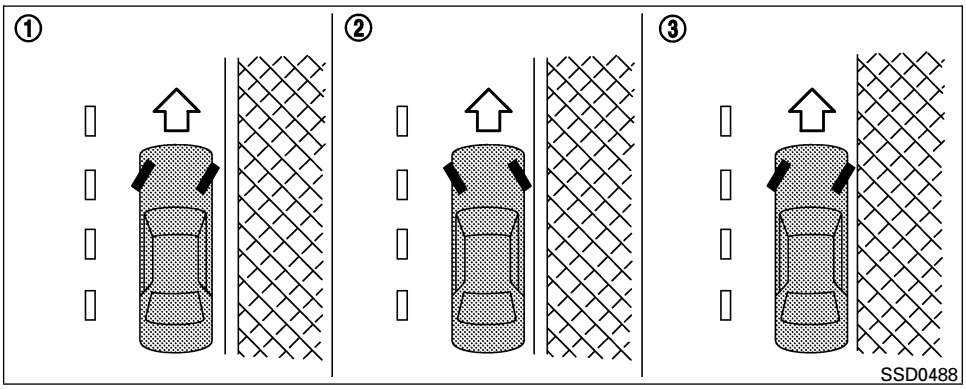

⚠WARNING

- **Do not stop or park the vehicle over flammable materials such as dry grass, waste paper or rags. They may ignite and cause a fire.**

- **Safe parking procedures require that both the parking brake be set and the transmission placed into P (Park) for CVT models or in an appropriate gear for manual transmission models. Failure to do so could cause the vehicle to move unexpectedly or roll away and result in an accident. Make sure the shift lever has been pushed as far forward as it can go and cannot be moved without depressing the foot brake pedal.**
- **Never leave the engine running while the vehicle is unattended.**
- **Do not leave children unattended inside the vehicle. They could unknowingly activate switches or controls. Unattended children could become involved in serious accidents.**

1. Firmly apply the parking brake.
2. **Manual transmission models:**

   Place the shift lever in the R (Reverse) position. When parking on an uphill grade, place the shift lever in 1st gear.

   Continuously Variable Transmission (CVT) models:

   Move the shift selector lever to the P (Park) position.
3. To help prevent the vehicle from rolling into traffic when parked on an incline, it is a good practice to turn the wheels as illustrated.

- HEADED DOWNHILL WITH CURB: ①

  Turn the wheels into the curb and move the vehicle forward until the curb side wheel gently touches the curb.

- HEADED UPHILL WITH CURB: ②

  Turn the wheels away from the curb and move the vehicle back until the curb side wheel gently touches the curb.

☞ **REVIEW COPY—*2007 Versa*** *(vrs)*
Owners Manual—USA_English *(nna)*
03/06/06—arosenma ☜

- HEADED UPHILL OR DOWNHILL, NO CURB: ③

  Turn the wheels toward the side of the road so the vehicle will move away from the center of the road if it moves.

4. Turn the ignition key to the LOCK position and remove the key.

POWER STEERING

⚠ WARNING

- **If the engine is not running or is turned off while driving, the power assist for the steering will not work. Steering will be harder to operate.**
- **When the power steering warning light illuminates with the engine running, there will be no power assist for the steering. You will still have control of the vehicle but the steering will be harder to operate. Have the power steering system checked by a NISSAN dealer.**

The power steering system is designed to provide power assist while driving to operate the steering wheel with light force.

When the steering wheel is operated repeatedly or continuously while parking or driving at a very low speed, the power assist for the steering wheel will be reduced. This is to prevent overheating of the power steering system and protect it from getting damaged. While the power assist is reduced, steering wheel operation will become heavy. When the temperature of the power steering system goes down, the power assist level will return to normal. Avoid repeating such steering wheel operations that could cause the power steering system to overheat.

You may hear a sound when the steering wheel is operated quickly. However, this is not a malfunction.

If the power steering warning light **PS** illuminates while the engine is running, it may indicate the power steering system is not functioning properly and may need servicing. Have the power steering system checked by a NISSAN dealer.

When the power steering warning light illuminates with the engine running, there will be no power assist for the steering but you will still have control of the vehicle. At this time, greater steering effort is required to operate the steering wheel, especially in sharp turns and at low speeds.

For additional information see “Power steering warning light” in the “Instruments and controls” section.

☞ **REVIEW COPY—*2007 Versa*** *(vrs)*
Owners Manual—USA_English *(nna)*
03/06/06—arosenma ☜

BRAKE SYSTEM

The brake system has two separate hydraulic circuits. If one circuit malfunctions, you will still have braking at two wheels.

BRAKE PRECAUTIONS

Vacuum assisted brakes

The brake booster aids braking by using engine vacuum. If the engine stops, you can stop the vehicle by depressing the brake pedal. However, greater foot pressure on the brake pedal will be required to stop the vehicle and stopping distance will be longer.

Using the brakes

Avoid resting your foot on the brake pedal while driving. This will overheat the brakes, wear out the brakes and pads faster, and reduce gas mileage.

To help reduce brake wear and to prevent the brakes from overheating, reduce speed and downshift to a lower gear before going down a slope or long grade. Overheated brakes may reduce braking performance and could result in loss of vehicle control.

⚠ WARNING

- **While driving on a slippery surface, be careful when braking, accelerating or downshifting. Abrupt braking or accelerating could cause the wheels to skid and result in an accident.**
- **If the engine is not running or is turned off while driving, the power assist for the brakes will not work. Braking will be harder.**

Wet brakes

When the vehicle is washed or driven through water, the brakes may get wet. As a result, your braking distance will be longer and the vehicle may pull to one side during braking.

To dry the brakes, drive the vehicle at a safe speed while lightly pressing the brake pedal to heat up the brakes. Do this until the brakes return to normal. Avoid driving the vehicle at high speeds until the brakes function correctly.

Parking brake break-in

Break-in the parking brake shoes whenever the stopping effect of the parking brake is weakened or whenever the parking brake shoes and/or drum/rotors are replaced, in order to assure the best brake performance.

This procedure is described in the vehicle service manual and can be performed by a NISSAN dealer.

ANTI-LOCK BRAKING SYSTEM (ABS) (if so equipped)

The anti-lock braking system controls the brakes so the wheels do not lock when braking abruptly or when braking on slippery surfaces. The system detects the rotation speed at each wheel and varies the brake fluid pressure to prevent each wheel from locking and sliding. By preventing wheel lockup, the system helps the driver maintain steering control and helps to minimize swerving and spinning on slippery surfaces.

Using the system

Depress the brake pedal and hold it down.

⚠ WARNING

Do not pump the brake pedal. Doing so may result in increased stopping distances.

Normal operation

The anti-lock braking system does not operate at speeds below 3 - 6 MPH (5 - 10 km/h). (The speeds vary according to road conditions.)

☞ **REVIEW COPY—*2007 Versa*** *(vrs)*
Owners Manual—USA_English *(nna)*
03/06/06—arosenma ☜

When driving, the anti-lock braking system controls the wheels so they will not lock when braking abruptly or when braking on a slippery road. Thus, steering control is increased and swerving of the vehicle is decreased during emergency braking. The system detects the wheel rotation rate and electronically controls the pressure applied to each brake. Slight vibration on the brake pedal accompanied by noise usually occurs while the ABS system is operating. Such vibration and noise encountered during abrupt braking is not a problem, but indicates that the system is functioning properly. However, the pulsation may indicate that road conditions are hazardous and extra care is required while driving.

Self-test feature

The anti-lock braking system consists of electronic sensors and hydraulic solenoids controlled by a computer. The computer has a built-in diagnostic feature that tests the system each time you start the engine and move the vehicle at a low speed in forward or reverse. When the self-test occurs, you may hear a "clunk" noise and/or feel a pulsation in the brake pedal. This is normal and is not an indication of any malfunction. If the computer senses any malfunction, it switches the anti-lock braking system off and turns on the ABS brake warning light on the instrument panel. The braking system then operates normally, but without anti-lock assistance.

If the light comes on during the self-test or while driving, take the vehicle to a NISSAN dealer for repair.

⚠ WARNING

- **The anti-lock braking system is a sophisticated device, but it cannot prevent accidents resulting from careless or dangerous driving techniques. It can help maintain vehicle control during braking on slippery surfaces, but remember that the stopping distance on slippery surfaces will be longer than on normal surfaces even with the anti-lock braking system. Stopping distances may also be longer on rough, gravel or snow covered roads, or if you are using tire chains. Tire type and condition may also affect braking effectiveness. Always maintain a safe distance from the vehicle in front of you. Ultimately, the responsibility for safety of self and others rests in the hands of the driver.**
- **Tire type and condition of tires may also affect braking effectiveness.**
- **When replacing tires, install the specified size of tires on all four wheels.**
- **When installing a spare tire, make sure it is the proper size and type as specified on the Tire and Loading Information label. For tire placard location information, refer to "Tire and Loading Information label" in the "Technical and consumer information" section of this manual.**
- **Refer to "Wheels and tires" in the "Maintenance and do-it-yourself" section of this manual.**

☞ **REVIEW COPY—*2007 Versa*** *(vrs)*
Owners Manual—USA_English *(nna)*
03/06/06—arosenma ☜

COLD WEATHER DRIVING

FREEING A FROZEN DOOR LOCK

To prevent a door lock from freezing, apply de-icer through the key hole. If the lock becomes frozen, heat the key before inserting it into the key hole or use the remote keyless entry keyfob (if so equipped).

ANTI-FREEZE

In the winter when it is anticipated that the temperature will drop below 32°F (0°C), check the anti-freeze to assure proper winter protection. For details, see “Engine cooling system” in the “Maintenance and do-it-yourself” section of this manual.

BATTERY

If the battery is not fully charged during extremely cold weather conditions, the battery fluid may freeze and damage the battery. To maintain maximum efficiency, the battery should be checked regularly. For details, see “Battery” in the “Maintenance and do-it-yourself” section of this manual.

DRAINING OF COOLANT WATER

If the vehicle is to be left outside without anti-freeze, drain the cooling system, including the engine block. Refill before operating the vehicle. For details, see “Changing engine coolant” in the “Maintenance and do-it-yourself” section of this manual.

TIRE EQUIPMENT

1. SUMMER tires have a tread designed to provide superior performance on dry pavement. However, the performance of these tires will be substantially reduced in snowy and icy conditions. If you operate your vehicle on snowy or icy roads, NISSAN recommends the use of MUD & SNOW or ALL SEASON TIRES on all four wheels. Please consult a NISSAN dealer for the tire type, size, speed rating and availability information.
2. For additional traction on icy roads, studded tires may be used. However, some U.S. states and Canadian provinces prohibit their use. Check local, state and provincial laws before installing studded tires.

Skid and traction capabilities of studded snow tires on wet or dry surfaces may be poorer than that of non-studded snow tires.

3. Tire chains may be used. For details see “Tire chains” in the “Maintenance and do-it-yourself” section of this manual.

SPECIAL WINTER EQUIPMENT

It is recommended that the following items be carried in the vehicle during winter:

- A scraper and stiff-bristled brush to remove ice and snow from the windows and wiper blades.
- A sturdy, flat board to be placed under the jack to give it firm support.
- A shovel to dig the vehicle out of snowdrifts.
- Extra window washer fluid to refill the reservoir tank.

DRIVING ON SNOW OR ICE

⚠ WARNING

- **Wet ice (32°F, 0°C and freezing rain), very cold snow or ice can be slick and very hard to drive on. The vehicle will have much less traction or “grip” under these conditions. Try to avoid driving on wet ice until the road is salted or sanded.**

☞ **REVIEW COPY—*2007 Versa*** *(vrs)*
Owners Manual—USA_English *(nna)*
03/06/06—arosenma ☜

- **Whatever the condition, drive with caution. Accelerate and slow down with care. If accelerating or downshifting too fast, the drive wheels will lose even more traction.**
- **Allow more stopping distance under these conditions. Braking should be started sooner than on dry pavement.**
- **Allow greater following distances on slippery roads.**
- **Watch for slippery spots (glare ice). These may appear on an otherwise clear road in shaded areas. If a patch of ice is seen ahead, brake before reaching it. Try not to brake while on the ice, and avoid any sudden steering maneuvers.**
- **Do not use the cruise control on slippery roads.**
- **Snow can trap dangerous exhaust gases under your vehicle. Keep snow clear of the exhaust pipe and from around your vehicle.**

ENGINE BLOCK HEATER (if so equipped)

An engine block heater to assist in extreme cold temperature starting is available through a NISSAN dealer.

⚠ WARNING

Do not use your heater with an ungrounded electrical system or two-pronged (cheater) adapters. You can be injured by an electrical shock if you use an ungrounded connection.

☞ **REVIEW COPY—*2007 Versa*** *(vrs)*
Owners Manual—USA_English *(nna)*
03/06/06—arosenma ☜