TECOM CO., LTD.
23, R&D ROAD 2, SBIP
HSIN-CHU, TAIWAN, ROC
PHONE: +886-3-577-5141
FAX: +886-3-579-7196

	Document No. IM-CPE04-1304-001	
	Date Issued: 2005.7.7	**Revision:** 1.0

Antenna Pattern of

Class 1 Bluetooth USB Dongle

BT3034

Approved by: Bryan Lee	**Prepared by:** C.F Liu/ Bryan Lee
Department : Wireless Communication Department, CPE R&D Division	

TECOM CO., LTD.
23, R&D ROAD 2, SBIP
HSIN-CHU, TAIWAN, ROC
PHONE: +886-3-577-5141
FAX: +886-3-579-7196

1. Coordinate System Reference:

Top View:

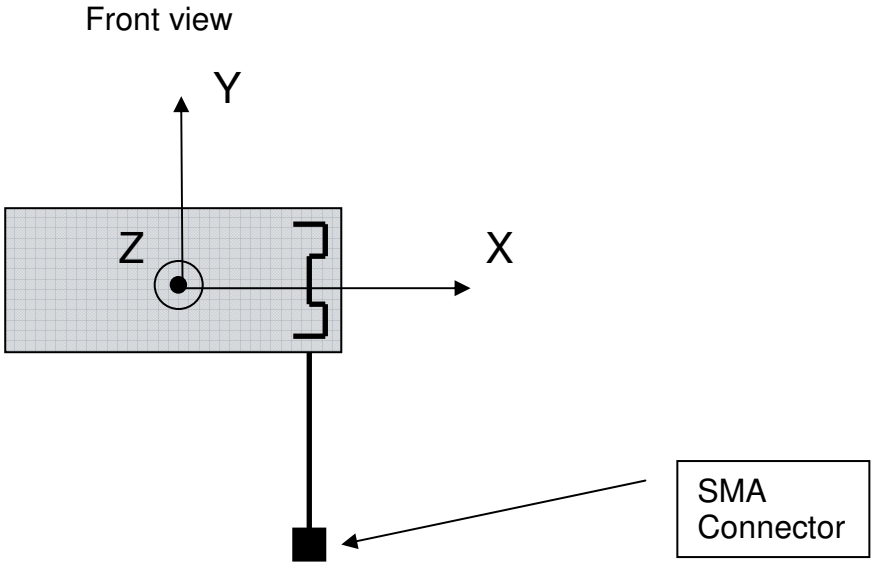

Side View:

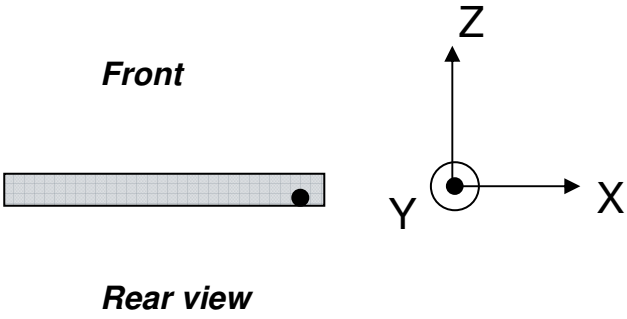

TECOM CO., LTD.
23, R&D ROAD 2, SBIP
HSIN-CHU, TAIWAN, ROC
PHONE: +886-3-577-5141
FAX: +886-3-579-7196

2. Radiation pattern: XZ Plane

Degree	XZ
0	0.3
45	0.3
90	2.5
135	0.4
180	-4
225	1.2
270	0.3
315	-3.2

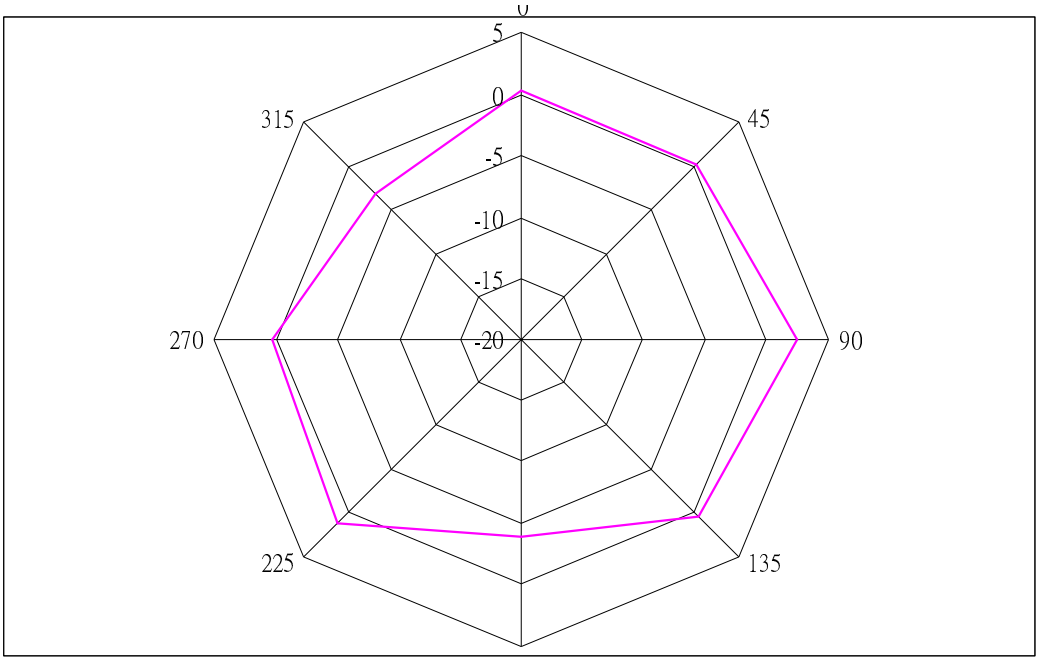

TECOM CO., LTD.
23, R&D ROAD 2, SBIP
HSIN-CHU, TAIWAN, ROC
PHONE: +886-3-577-5141
FAX: +886-3-579-7196

3. Radiation pattern: XY Plane

Degree	XY
0	-1.4
45	1.4
90	1.4
135	-2.9
180	-3.9
225	-0.2
270	-6.7
315	-5.3

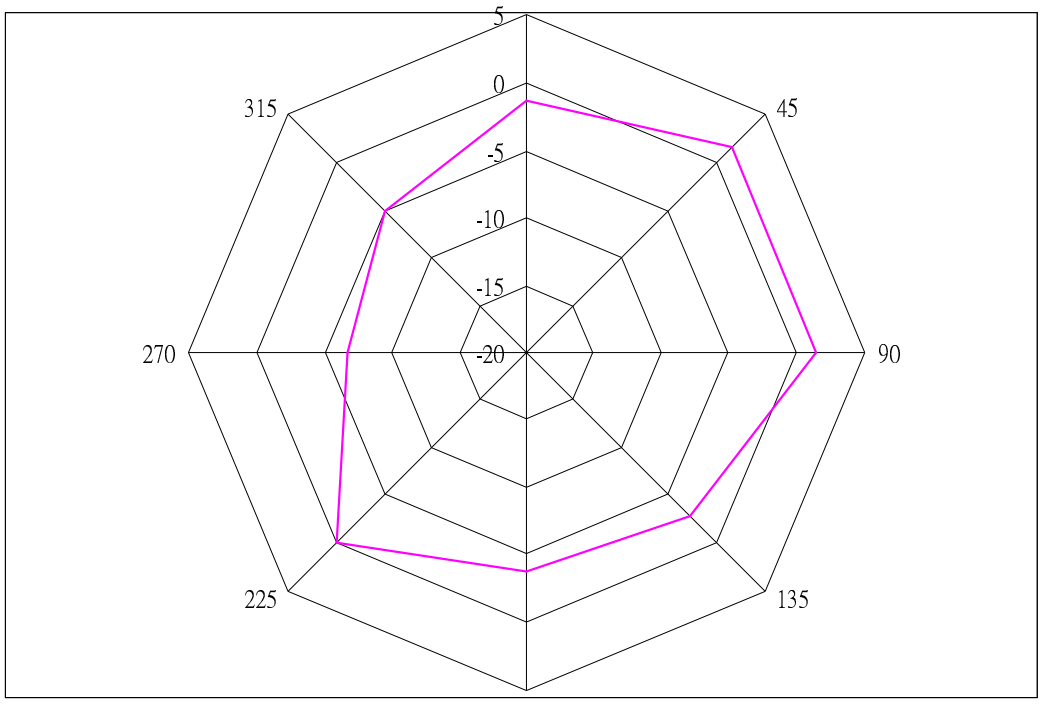

TECOM CO., LTD.
23, R&D ROAD 2, SBIP
HSIN-CHU, TAIWAN, ROC
PHONE: +886-3-577-5141
FAX: +886-3-579-7196

4. Radiation pattern: YZ Plane

Degree	YZ
0	-2.5
45	-2.5
90	-4.7
135	-3.4
180	-4.5
225	-7.1
270	-5.9
315	-2.8

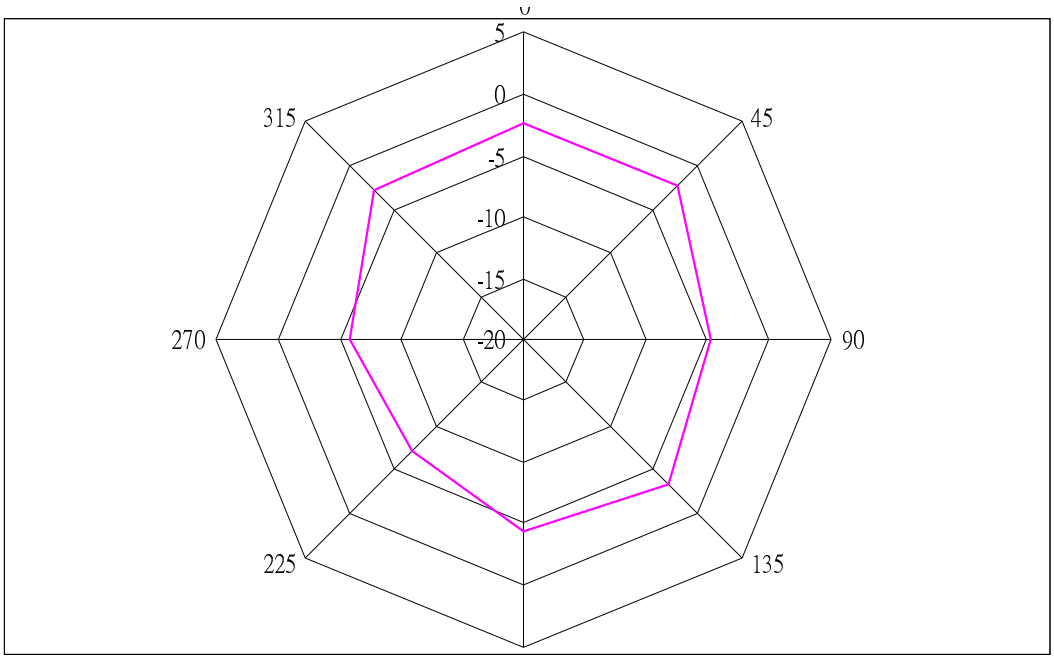

TECOM CO., LTD.
23, R&D ROAD 2, SBIP
HSIN-CHU, TAIWAN, ROC
PHONE: +886-3-577-5141
FAX: +886-3-579-7196

5. Antenna gain:

Antenna gain(天線增益) is 2.5 dBi and it is found at 90deg of the XY plane.