FCC Test Report

Equipment	:	**Residential Fire and Burglar Control Unit**
Brand Name	:	**technicolor**
Model No.	:	**DLC-200C US**
FCC ID	:	**D6XDLC200**
Standard	:	**47 CFR FCC Part 15.249**
Operating Band	:	**902 MHz – 928 MHz**
FCC Classification	:	**DXX**
Applicant	:	**TECOM CO., LTD.** No. 23 R&D Road 2, Science-Based Industrial Park, Hsin-Chu Taiwan
Manufacturer	:	**Global Brands Manufacture (DongGuan) Ltd.** Yue Yuan Industrial Estate, Huang Jiang Zhen, DongGuan City, GuangDong Province, China

The product sample received on Apr. 30, 2015 and completely tested on May 12, 2015. We, SPORTON, would like to declare that the tested sample has been evaluated in accordance with the procedures given in ANSI C63.10-2009 and shown compliance with the applicable technical standards.

The test results in this report apply exclusively to the tested model / sample. Without written approval of SPORTON INTERNATIONAL INC., the test report shall not be reproduced except in full.

Reviewed by:

Kevin Liang / Assistant Manager

Testing Laboratory
1190

Table of Contents

1 GENERAL DESCRIPTION 5

1.1 Information 5
1.2 Support Equipment 7
1.3 Testing Applied Standards 7
1.4 Testing Location Information 7
1.5 Measurement Uncertainty 8

2 TEST CONFIGURATION OF EUT 9

2.1 The Worst Case Modulation Configuration 9
2.2 Test Channel Frequencies Configuration 9
2.3 The Worst Case Measurement Configuration 10
2.4 Test Setup Diagram 11

3 TRANSMITTER TEST RESULT 13

3.1 AC Power-line Conducted Emissions 13
3.2 Emission Bandwidth 16
3.3 Fundamental Emissions 18
3.4 Transmitter Radiated Unwanted Emissions 20

4 TEST EQUIPMENT AND CALIBRATION DATA 27

APPENDIX A. TEST PHOTOS

APPENDIX B. PHOTOGRAPHS OF EUT

Summary of Test Result

Conformance Test Specifications					
Report Clause	**Ref. Std. Clause**	**Description**	**Measured**	**Limit**	**Result**
1.1.2	15.203	Antenna Requirement	Antenna connector mechanism complied	FCC 15.203	Complied
3.1	15.207	AC Power-line Conducted Emissions	[dBuV]:0.1903870MHz 28.81 (Margin 25.21dB) - AV 50.63 (Margin 13.39dB) - QP	FCC 15.207	Complied
3.2	15.215(c)	Emission Bandwidth	0.1099 MHz; fall in band	Information only	Complied
3.3	15.249(a)	Fundamental Emissions	[dBuV/m at 3m]: 90.84 (Margin 3.16dB) quasi peak	[dBuV/m at 3m]: quasi peak: 94	Complied
3.4	15.249(a)/(d)	Transmitter Radiated Unwanted Emissions	[dBuV/m at 3m]:2725.26MHz 54.57 (Margin 19.43dB) - PK 52.43 (Margin 1.57dB) - AV	Harmonics: 54 dBuV/m@3m Other band: 50 dB or FCC 15.209, whichever is the lesser attenuation.	Complied

Revision History

Report No.	Version	Description	Issued Date
FR4N1719AZ	Rev. 01	Initial issue of report	Mar. 27, 2015
FR4N1719-01AZ	Rev. 02	1. MB add new DDR clock From 500 to 466MHz 2. MB with external RTC circuit 3. New RF-US board (4 Layer) a. 4-layer RF (US) b. ZW shield c. ZW decoupling caps	Jul. 22, 2015
FR630406AZ	Rev. 01	1. Add LED controller 2. Add 3G hot-swap 3. Change Brand Name 4. Change appearance	Jun. 30, 2016
FR630406AZ	Rev. 02	1. LED controller. 2. 3G unit hot-swap. (3G unit FCC ID: D6XDLC200C) 3. Add conductive foam on RF main board. 4. Add vents on the bottom of enclosure. 5. Change brand name, update label accordingly. 6. Change RTC battery (B2) position. 7. Remove redundant connectors of JTAG (j4000) & boot configuration (p7000) & wifi ipex (j9305 & j9304). 8. 2nd source of resistor (R11027).	Aug. 01, 2016

1 General Description

1.1 Information

1.1.1 RF General Information

RF General Information				
Frequency Range (MHz)	Modulation	Ch. Frequency (MHz)	Channel Number	Fundamental Field Strength (dBuV/m)
902-928	FSK	908.42	1	90.84
Note 1: Field strength performed quasi peak level at 3m.				

1.1.2 Antenna Information

Antenna Category	
☒	Integral antenna (antenna permanently attached)
☐	External antenna (dedicated antennas) ; Unique antenna connector

1.1.3 Type of EUT

Identify EUT	
EUT Serial Number	N/A
Presentation of Equipment	☒ Production ; ☐ Pre-Production ; ☐ Prototype
Type of EUT	
☒	Stand-alone
☐	Combined (EUT where the radio part is fully integrated within another device) Combined Equipment - Brand Name / Model No.: …
☐	Plug-in radio (EUT intended for a variety of host systems) Host System - Brand Name / Model No.: …
☐	Other:

1.1.4 Test Signal Duty Cycle

Operated Mode for Worst Duty Cycle	
☐ Operated normally mode for worst duty cycle	
☒ Operated test mode for worst duty cycle	
Test Signal Duty Cycle (x)	**Duty Cycle Correction Factor [dB] – (20 log x)**
☒ 32.11%	4.93
If worst duty < 100%, average emission = peak emission + 20 log x	

Note 1: RF Output Power Plots w/o Duty Factor

1.1.5 EUT Operational Condition

Supply Voltage	☒ AC mains	☒ DC	
Type of DC Source	☐ Internal DC supply	☒ From PoE	☒ Battery

1.2 Support Equipment

Support Equipment - RF Conducted			
No.	**Equipment**	**Brand Name**	**Model Name**
1	Notebook	Dell	E5540

Support Equipment - Radiated Emission & AC Conduction			
No.	**Equipment**	**Brand Name**	**Model Name**
1	PoE	PHIHONG	POE31U-1AT

1.3 Testing Applied Standards

According to the specifications of the manufacturer, the EUT must comply with the requirements of the following standards:

- 47 CFR FCC Part 15
- ANSI C63.10-2009

1.4 Testing Location Information

Testing Location					
☒	HWA YA	ADD :	No. 52, Hwa Ya 1st Rd., Hwa Ya Technology Park, Kwei-Shan District, Tao Yuan City, Taiwan, R.O.C.		
		TEL :	886-3-327-3456	FAX :	886-3-327-0973
Test Site Registration Number: FCC 636805					
Test Condition		**Test Site No.**	**Test Engineer**	**Test Environment**	
AC Conduction		CO04-HY	Zeus	20 °C / 55 %	
RF Conducted		TH01-HY	Shiming	23.4 °C / 62 %	
Radiated Emission		03CH03-HY	Terry	23.3 °C / 52 %	

1.5 Measurement Uncertainty

ISO/IEC 17025 requires that an estimate of the measurement uncertainties associated with the emissions test results be included in the report. The measurement uncertainties given below are based on a 95% confidence level (based on a coverage factor (k=2)

Measurement Uncertainty		
Test Item		**Uncertainty**
AC power-line conducted emissions		±2.3 dB
Emission bandwidth, 6dB bandwidth		±0.6 %
RF output power, conducted		±0.1 dB
Power density, conducted		±0.6 dB
Unwanted emissions, conducted	9 – 150 kHz	±0.4 dB
	0.15 – 30 MHz	±0.4 dB
	30 – 1000 MHz	±0.6 dB
	1 – 18 GHz	±0.5 dB
	18 – 40 GHz	±0.5 dB
	40 – 200 GHz	N/A
All emissions, radiated	9 – 150 kHz	±2.5 dB
	0.15 – 30 MHz	±2.3 dB
	30 – 1000 MHz	±2.6 dB
	1 – 18 GHz	±3.6 dB
	18 – 40 GHz	±3.8 dB
	40 – 200 GHz	N/A
Temperature		±0.8 °C
Humidity		±5 %
DC and low frequency voltages		±0.9 %
Time		±1.4 %
Duty Cycle		±0.6 %

2 Test Configuration of EUT

2.1 The Worst Case Modulation Configuration

Modulation Used for Conformance Testing	
Test Mode	**Field Strength (dBuV/m at 3 m)**
Z-wave-Transmit	90.84

2.2 Test Channel Frequencies Configuration

Test Channel Frequencies Configuration	
Test Mode	**Test Channel Frequencies (MHz)**
Z-wave-Transmit	908.42-(F1)

2.3 The Worst Case Measurement Configuration

The Worst Case Mode for Following Conformance Tests	
Tests Item	AC power-line conducted emissions
Condition	AC power-line conducted measurement for line and neutral (120Vac / 60Hz)
Operating Mode	Operating Mode Description
1	PoE & Transmit

The Worst Case Mode for Following Conformance Tests			
Tests Item	Emission Bandwidth, Fundamental Emissions, Radiated Unwanted Emissions		
Test Condition	Radiated measurement		
User Position	☐ EUT will be placed in fixed position.		
	☒ EUT will be placed in mobile position and operating multiple positions. EUT shall be performed three orthogonal planes.		
	☐ EUT will be a hand-held or body-worn battery-powered devices and operating multiple positions.		
Operating Mode	1. PoE & Transmit		
Test Mode	Z-wave-Transmit		
Orthogonal Planes of EUT	**X Plane**	**Y Plane**	**Z Plane**
Worst Planes of EUT			V

2.4 Test Setup Diagram

Test Setup Diagram – AC Line Conducted Emission Test

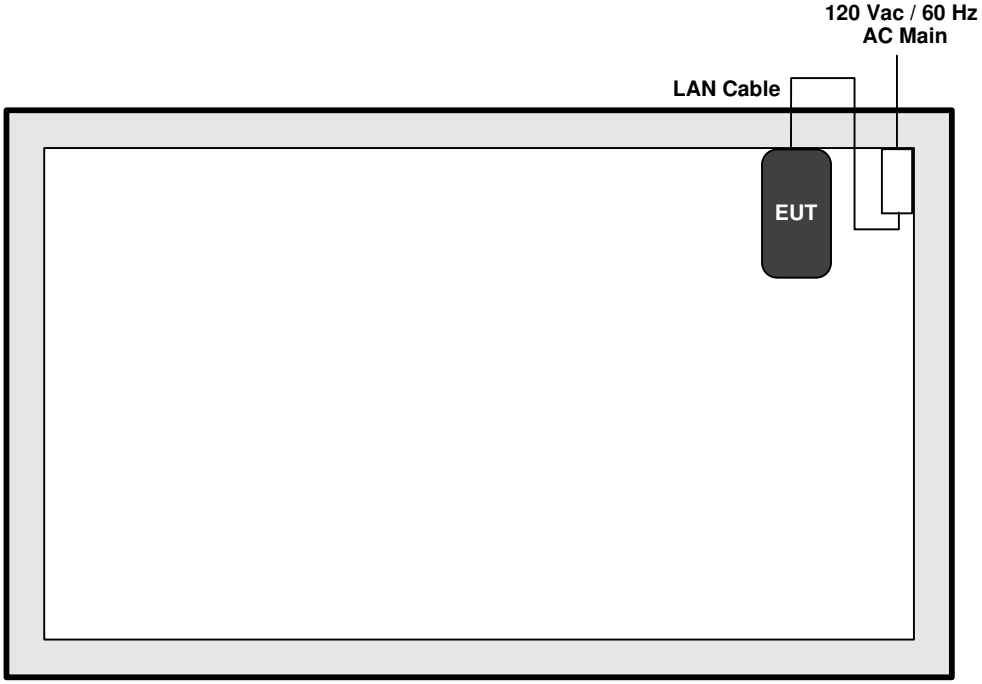

Test Setup Diagram - Radiated Test Below 1GHz

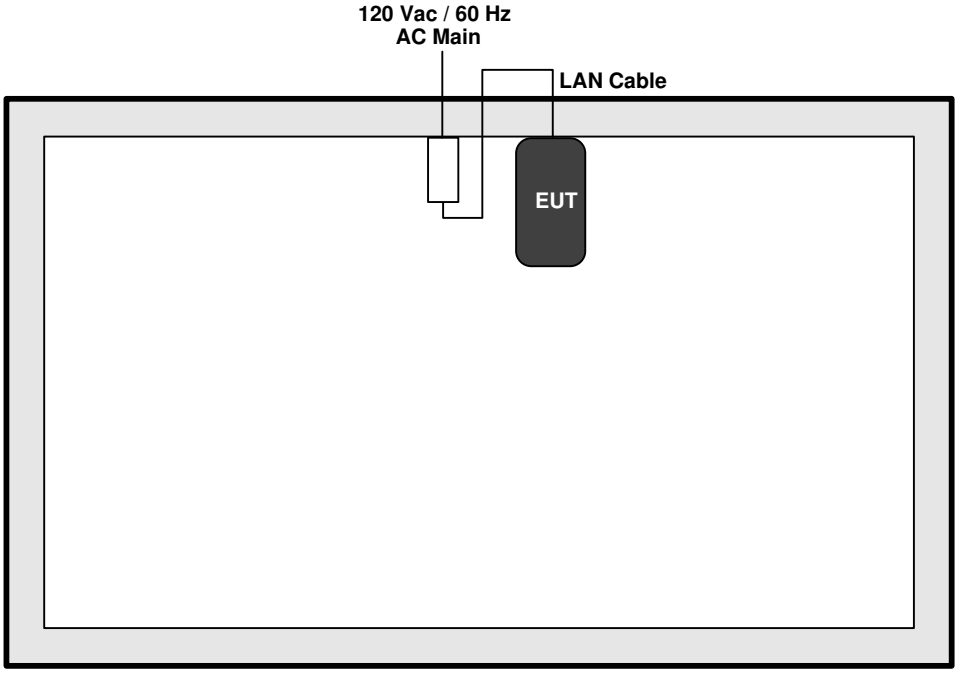

Test Setup Diagram - Radiated Test Above 1GHz

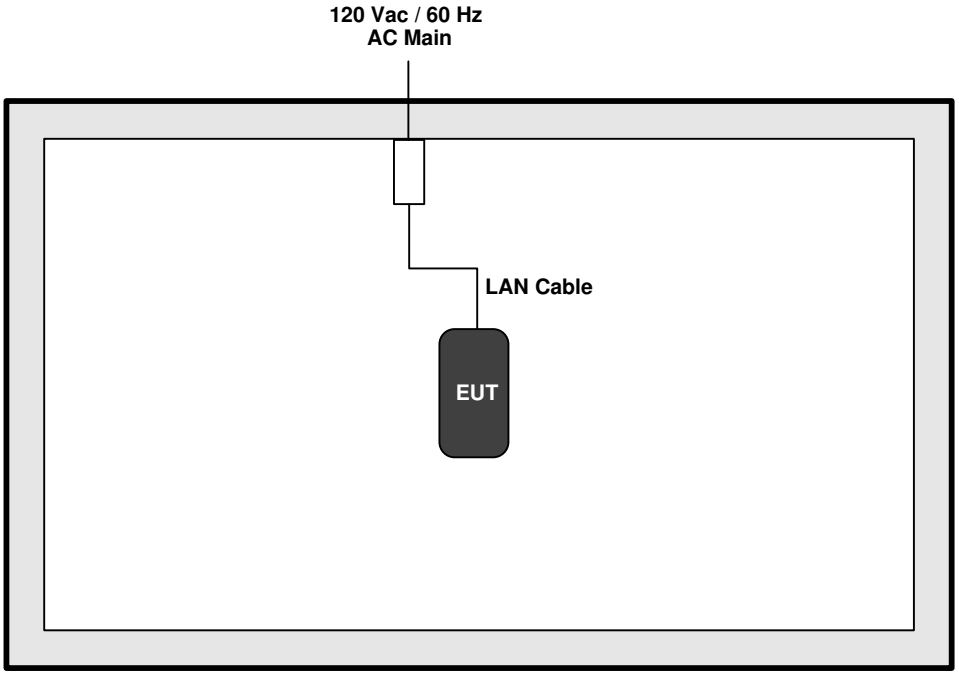

3 Transmitter Test Result

3.1 AC Power-line Conducted Emissions

3.1.1 AC Power-line Conducted Emissions Limit

AC Power-line Conducted Emissions Limit		
Frequency Emission (MHz)	**Quasi-Peak**	**Average**
0.15-0.5	66 - 56 *	56 - 46 *
0.5-5	56	46
5-30	60	50
Note 1: * Decreases with the logarithm of the frequency.		

3.1.2 Measuring Instruments

Refer a test equipment and calibration data table in this test report.

3.1.3 Test Procedures

Test Method
☒ Refer as ANSI C63.10-2009, clause 6.2 for AC power-line conducted emissions.

3.1.4 Test Setup

AC Power-line Conducted Emissions

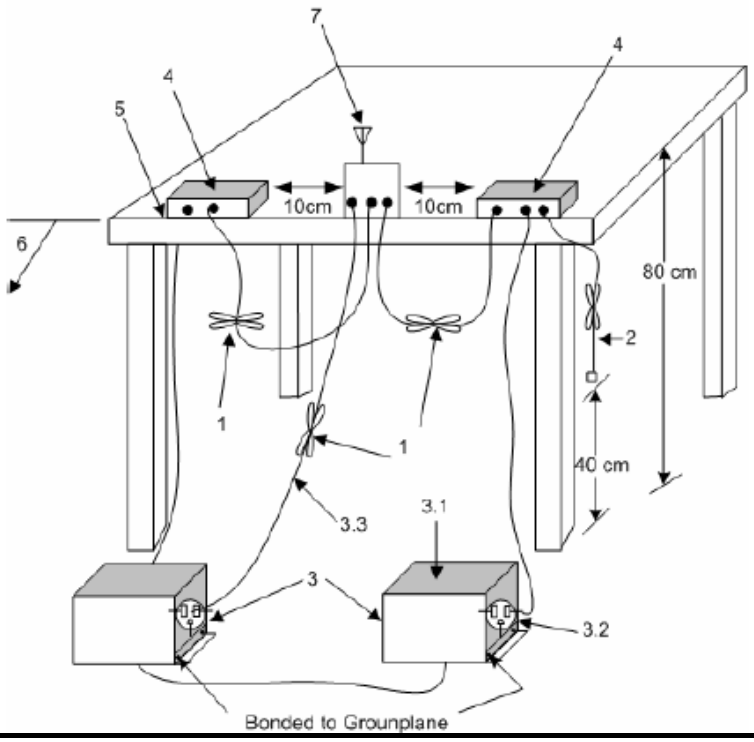

3.1.5 Test Result of AC Power-line Conducted Emissions

AC Power-line Conducted Emissions Result			
Operating Mode	1	**Power Phase**	Neutral
Operating Function	PoE & Transmit		

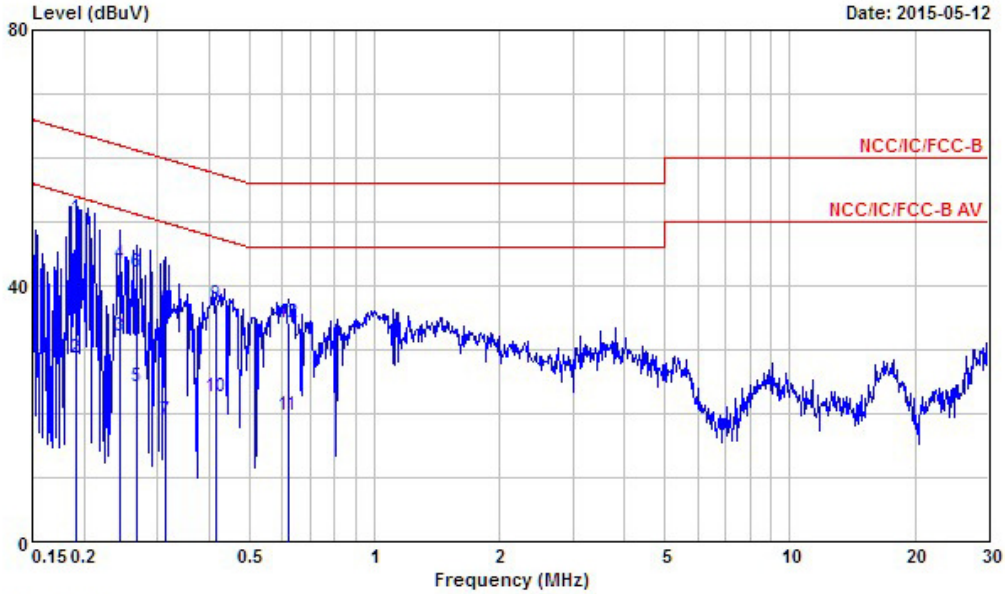

	Freq	Level	Over Limit	Limit Line	Read Level	LISN Factor	Cable Loss	Remark
	MHz	dBuV	dB	dBuV	dBuV	dB	dB	
1	@0.1903870	50.63	-13.39	64.02	50.09	0.07	0.47	QP
2	0.1903870	28.81	-25.21	54.02	28.27	0.07	0.47	Average
3	0.2442230	32.05	-19.90	51.95	31.45	0.07	0.53	Average
4	0.2442230	43.42	-18.53	61.95	42.82	0.07	0.53	QP
5	0.2672410	24.14	-27.06	51.20	23.53	0.07	0.54	Average
6	0.2672410	42.08	-19.12	61.20	41.47	0.07	0.54	QP
7	0.3149460	18.89	-30.95	49.84	18.25	0.07	0.57	Average
8	0.3149460	36.30	-23.54	59.84	35.66	0.07	0.57	QP
9	0.4148480	37.13	-20.42	57.55	36.45	0.07	0.61	QP
10	0.4148480	22.71	-24.84	47.55	22.03	0.07	0.61	Average
11	0.6205370	19.85	-26.15	46.00	19.07	0.08	0.70	Average
12	0.6205370	34.30	-21.70	56.00	33.52	0.08	0.70	QP

Note 1: “>20dB” means emission levels that exceed the level of 20 dB below the applicable limit.
Note 2: “N/F” means Nothing Found emissions (No emissions were detected.)

AC Power-line Conducted Emissions Result			
Operating Mode	1	**Power Phase**	Line
Operating Function	PoE & Transmit		

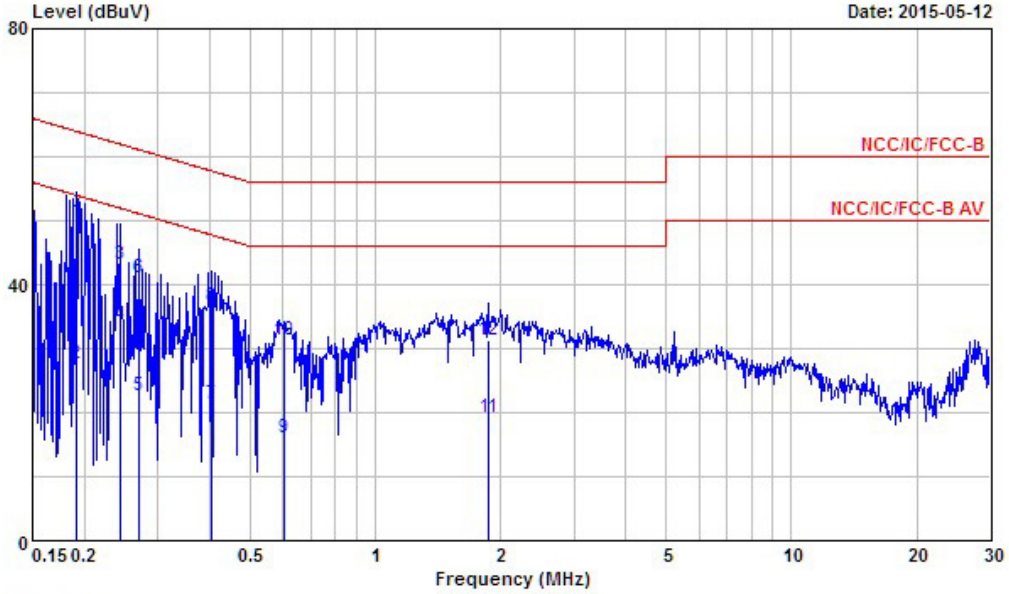

	Freq	Level	Over Limit	Limit Line	Read Level	LISN Factor	Cable Loss	Remark
	MHz	dBuV	dB	dBuV	dBuV	dB	dB	
1	@0.1903870	49.69	-14.33	64.02	49.16	0.06	0.47	QP
2	0.1903870	27.58	-26.44	54.02	27.05	0.06	0.47	Average
3	0.2429320	43.14	-18.86	62.00	42.55	0.06	0.53	QP
4	0.2429320	33.63	-18.37	52.00	33.04	0.06	0.53	Average
5	0.2700880	22.54	-28.58	51.12	21.94	0.06	0.54	Average
6	0.2700880	41.09	-20.03	61.12	40.49	0.06	0.54	QP
7	0.4040020	21.23	-26.54	47.77	20.56	0.07	0.60	Average
8	0.4040020	36.52	-21.25	57.77	35.85	0.07	0.60	QP
9	0.6011200	16.14	-29.86	46.00	15.38	0.07	0.69	Average
10	0.6011200	31.43	-24.57	56.00	30.67	0.07	0.69	QP
11	1.870	19.26	-26.74	46.00	18.36	0.10	0.80	Average
12	1.870	31.25	-24.75	56.00	30.35	0.10	0.80	QP

Note 1: “>20dB” means emission levels that exceed the level of 20 dB below the applicable limit.
Note 2: “N/F” means Nothing Found emissions (No emissions were detected.)

3.2 Emission Bandwidth

3.2.1 Emission Bandwidth Limit

Emission Bandwidth Limit
☒ Emission bandwidth falls completely within authorized band.

3.2.2 Measuring Instruments

Refer a test equipment and calibration data table in this test report.

3.2.3 Test Procedures

Test Method
☒ Refer as ANSI C63.10, clause 6.9.1 for 20 dB emission bandwidth and 99% occupied bandwidth measurement.

3.2.4 Test Setup

Emission Bandwidth
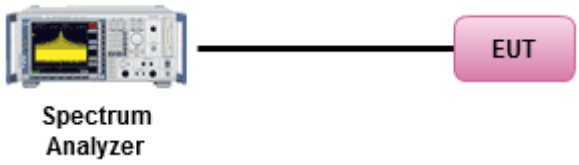

3.2.5 Test Result of Emission Bandwidth

Emission Bandwidth Result					
Modulation Mode	**Frequency (MHz)**	**99% Bandwidth (MHz)**	**F_L at 20dB BW (MHz)**	**F_H at 20dB BW (MHz)**	**20dB BW (MHz)**
Z-wave-Transmit	908.42	0.0976	908.3925	908.5024	0.1099
Limit		**N/A**	**902**	**928**	**N/A**
Result		**Complied**			

Worst Emission Bandwidth Plots

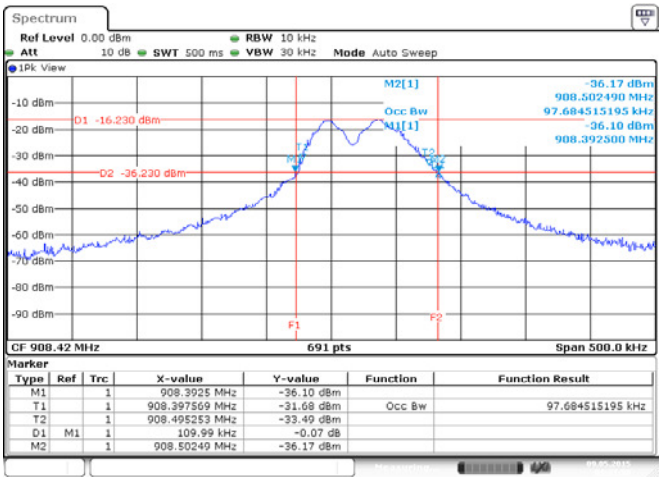

3.3 Fundamental Emissions

3.3.1 Fundamental Emissions Limit

Fundamental Emissions E-Field Strength Limit (3m)	
☒	902-928 MHz Band: 94 dBuV/m (quasi peak)
☐	2400-2483.5 MHz Band: 94 dBuV/m (average)
☐	5725-5785 MHz Band: 94 dBuV/m (average)

3.3.2 Measuring Instruments

Refer a test equipment and calibration data table in this test report.

3.3.3 Test Procedures

☒	The average emission levels shall be measured in [duty cycle ≥ 100 or by duty cycle correction factor].	
☒	For the transmitter emissions shall be measured using following options below:	
	☒	Refer as ANSI C63.10, clause 4.2.3.2.3 (Reduced VBW) – Duty cycle ≥ 100%.
	☐	Refer as ANSI C63.10, clause 4.2.3.2.2 average value of pulsed emissions. Adjusted by a “duty cycle correction factor”, derived from 20log (dwell time/100 ms). Average emission = peak emission + 20 log (duty cycle).
	☒	Refer as ANSI C63.10, clause 4.2.3.2.2 measurement procedure peak limit.
☒	Refer as ANSI C63.10, clause 6.5 for radiated emissions and test distance is 3m.	

3.3.4 Test Setup

Fundamental Emissions

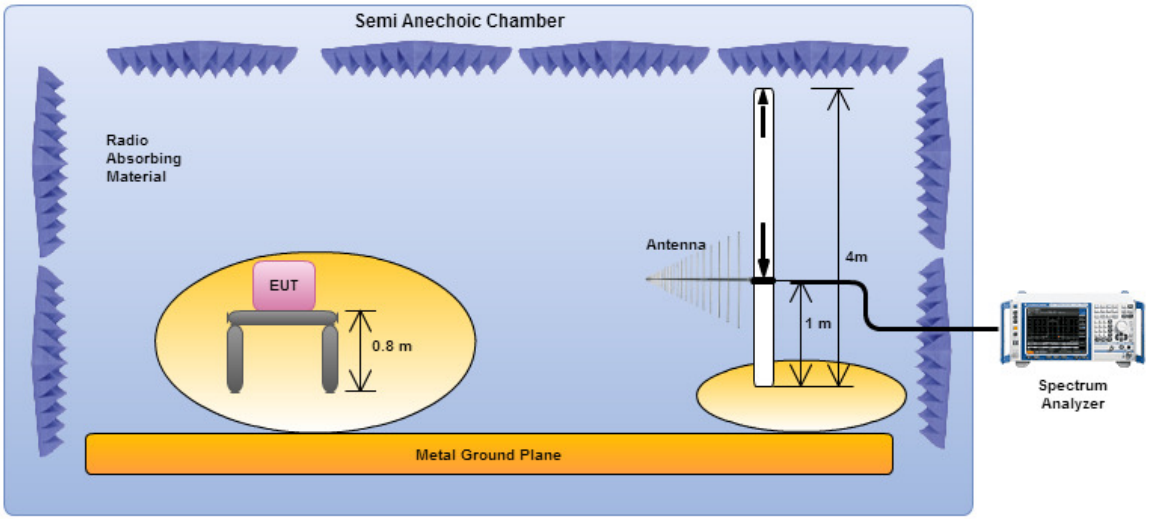

3.3.5 Test Result of Fundamental Emissions

Field Strength of Fundamental Emissions Result					
Modulation Mode	**Frequency (MHz)**	**Fundamental (dBuV/m)@3m**	**Margin (dB)**	**Limit (dBuV/m)@3m**	**Type**
Z-wave-Transmit	908.42	90.84	3.16	94	QP
Result		**Complied**			
Note 1: Measurement worst emissions of receive antenna polarization: Horizontal.					

3.4 Transmitter Radiated Unwanted Emissions

3.4.1 Transmitter Radiated Unwanted Emissions Limit

Transmitter Radiated Unwanted Emissions Limit
Harmonics:
☒ 54 dBuV/m (average)
Other Unwanted Emissions:
☒ 50 dB below the level of the fundamental or FCC 15.209, whichever is the lesser attenuation.

3.4.2 Measuring Instruments

Refer a test equipment and calibration data table in this test report.

3.4.3 Test Procedures

	Test Method – General Information
☒	Measurements may be performed at a distance other than the limit distance provided they are not performed in the near field and the emissions to be measured can be detected by the measurement equipment. When performing measurements at a distance other than that specified, the results shall be extrapolated to the specified distance using an extrapolation factor of 20 dB/decade (inverse of linear distance for field-strength measurements, inverse of linear distance-squared for power-density measurements).
☒	The average emission levels shall be measured in [duty cycle ≥ 98 or duty factor].
☒	Refer as ANSI C63.10, clause 6.10.3 bandedge testing shall be performed at the lowest frequency channel and highest frequency channel within the allowed operating band.
☒	For the transmitter unwanted emissions shall be measured using following options below:
	☒ Refer as ANSI C63.10, clause 4.2.3.2.3 (Reduced VBW) – Duty cycle ≥ 100%.
	☐ Refer as ANSI C63.10, clause 4.2.3.2.4 average value of pulsed emissions. Adjusted by a “duty cycle correction factor”, derived from 20log (dwell time/100 ms). Average emission = peak emission + 20 log (duty cycle).
	☒ Refer as ANSI C63.10, clause 4.2.3.2.2 measurement procedure peak limit.
☒	For the transmitter bandedge emissions shall be measured using following options below:
	☒ Refer as ANSI C63.10, clause 6.9.2 for band-edge testing.
	☐ Refer as ANSI C63.10, clause 6.9.3 for marker-delta method for band-edge measurements.
☒	For radiated measurement.
	☒ Refer as ANSI C63.10, clause 6.4 for radiated emissions below 30 MHz and test distance is 3m.
	☒ Refer as ANSI C63.10, clause 6.5 for radiated emissions 30 MHz to 1 GHz and test distance is 3m.
	☒ Refer as ANSI C63.10, clause 6.6 for radiated emissions above 1 GHz and test distance is 3m.
☒	The any unwanted emissions level shall not exceed the fundamental emission level.
☒	All amplitude of spurious emissions that are attenuated by more than 20 dB below the permissible value has no need to be reported.

3.4.4 Test Setup

Transmitter Radiated Unwanted Emissions (below 1GHz)

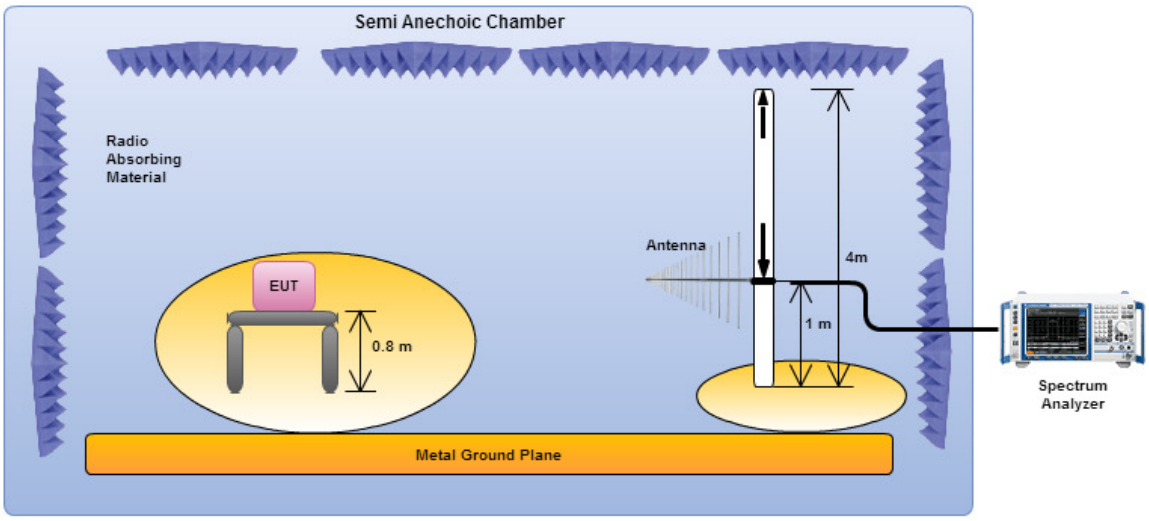

Magnetic field tests shall be performed in the frequency range of 9 kHz to 30 MHz using a calibrated loop antenna. Electric field tests shall be performed in the frequency range of 30 MHz to 1000 MHz using a calibrated bi-log antenna.

Transmitter Radiated Unwanted Emissions (Above 1GHz)

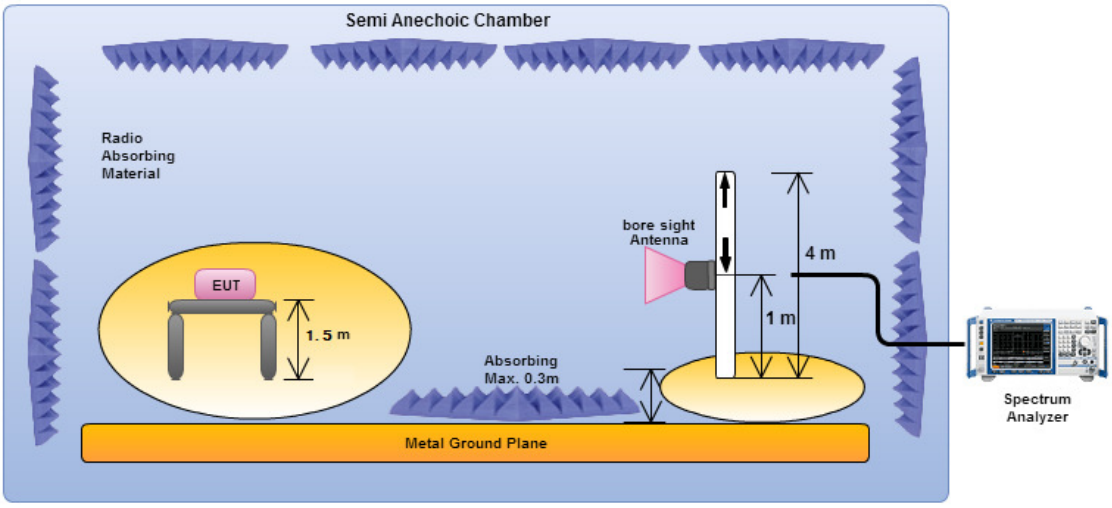

Electric field tests shall be performed in the frequency range of 1 GHz to 10th harmonic of highest fundamental frequency or 40 GHz using a calibrated horn antenna.

Note: FCC's permission to use 1.5m as an alternative per TCBC Conf call of Dec. 02, 2014.

3.4.5 Transmitter Radiated Bandedge Emissions

902-928 MHz Transmitter Radiated Bandedge Emissions									
Modulation Mode	Test Freq. (MHz)	Measure Distance (m)	Freq. (MHz) PK	Level (dBuV/m) PK	Limit (dBuV/m) QPK	Freq. (MHz) AV	Level (dBuV/m) AV	Limit (dBuV/m) AV	Pol.
Z-wave-Transmit	908.42	3	901.22	29.54	46	-	-	-	V
Note 1: Measurement worst emissions of receive antenna polarization.									

3.4.6 Transmitter Radiated Unwanted Emissions (Below 30MHz)

All amplitude of spurious emissions that are attenuated by more than 20 dB below the permissible value has no need to be reported.

3.4.7 Transmitter Radiated Unwanted Emissions (Below 1GHz)

Transmitter Radiated Unwanted Emissions (Below 1GHz)			
Operating Mode	1	**Polarization**	V
Operating Function	PoE & Transmit		

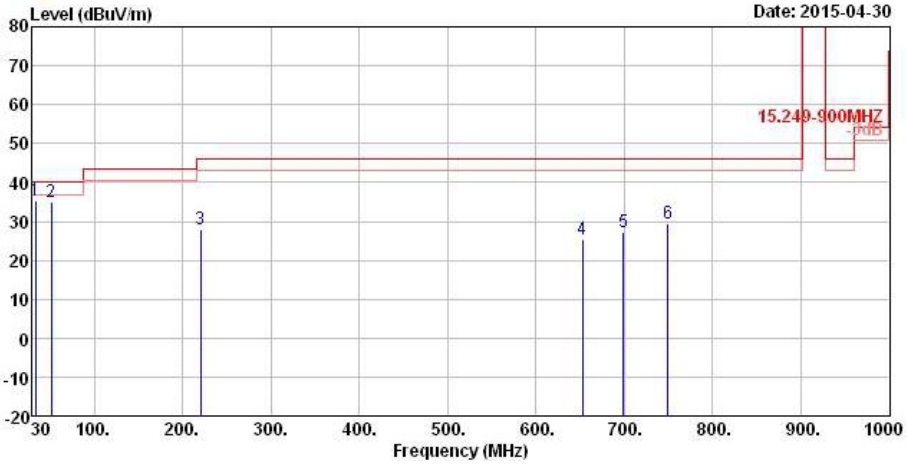

	Freq	Level	Over Limit	Limit Line	Read Level	Antenna Factor	Cable Loss	Preamp Factor	Remark
	MHz	dBuV/m	dB	dBuV/m	dBuV	dB/m	dB	dB	
1	33.88	35.27	-4.73	40.00	45.78	15.85	0.92	27.28	Peak
2	51.34	35.06	-4.94	40.00	53.48	7.84	1.15	27.41	Peak
3	220.12	27.98	-18.02	46.00	43.61	8.97	2.44	27.04	Peak
4	652.74	25.41	-20.59	46.00	30.31	18.52	4.36	27.78	Peak
5	699.30	27.37	-18.63	46.00	32.08	18.52	4.56	27.79	Peak
6	749.74	29.62	-16.38	46.00	33.29	19.38	4.66	27.71	Peak

Note 1: “>20dB” means spurious emission levels that exceed the level of 20 dB below the applicable limit.
Note 2: “N/F” means Nothing Found spurious emissions (No spurious emissions were detected.)
Note 3: Measurement receive antenna polarization: H (Horizontal), V (Vertical).
Note 4: No level of unwanted emissions exceeds the level of the fundamental emission.

Transmitter Radiated Unwanted Emissions (Below 1GHz)			
Operating Mode	1	**Polarization**	H
Operating Function	PoE & Transmit		

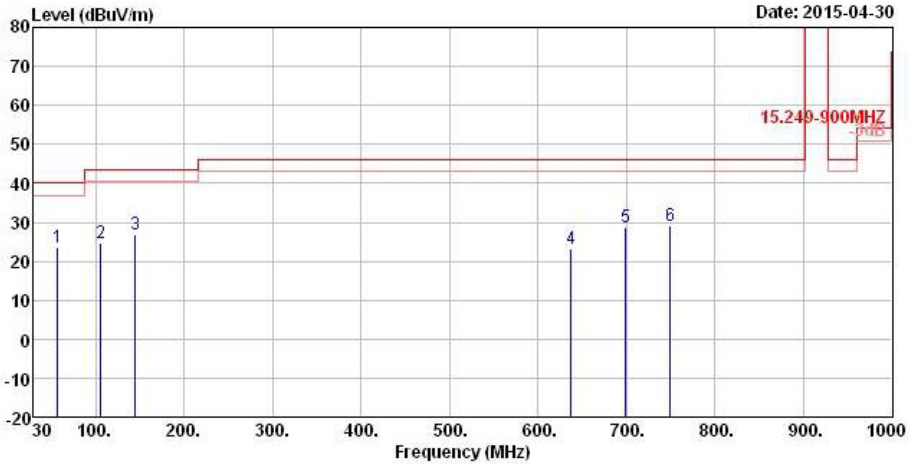

	Freq	Level	Over Limit	Limit Line	Read Level	Antenna Factor	Cable Loss	Preamp Factor	Remark
	MHz	dBuV/m	dB	dBuV/m	dBuV	dB/m	dB	dB	
1	57.16	23.40	-16.60	40.00	43.21	6.40	1.21	27.42	Peak
2	105.66	24.81	-18.69	43.50	38.91	11.44	1.65	27.19	Peak
3	144.46	26.76	-16.74	43.50	41.33	10.60	1.99	27.16	Peak
4	637.22	23.30	-22.70	46.00	28.20	18.57	4.30	27.77	Peak
5	699.30	28.83	-17.17	46.00	33.54	18.52	4.56	27.79	Peak
6	749.74	28.94	-17.06	46.00	32.61	19.38	4.66	27.71	Peak

Note 1: “>20dB” means spurious emission levels that exceed the level of 20 dB below the applicable limit.
Note 2: “N/F” means Nothing Found spurious emissions (No spurious emissions were detected.)
Note 3: Measurement receive antenna polarization: H (Horizontal), V (Vertical).
Note 4: No level of unwanted emissions exceeds the level of the fundamental emission.

3.4.8 Transmitter Radiated Unwanted Emissions (Above 1GHz)

Transmitter Radiated Unwanted Emissions (Above 1GHz)			
Modulation Mode	Z-wave-Transmit	**Test Freq. (FX)**	F1
Operating Function	Transmit	**Polarization**	V

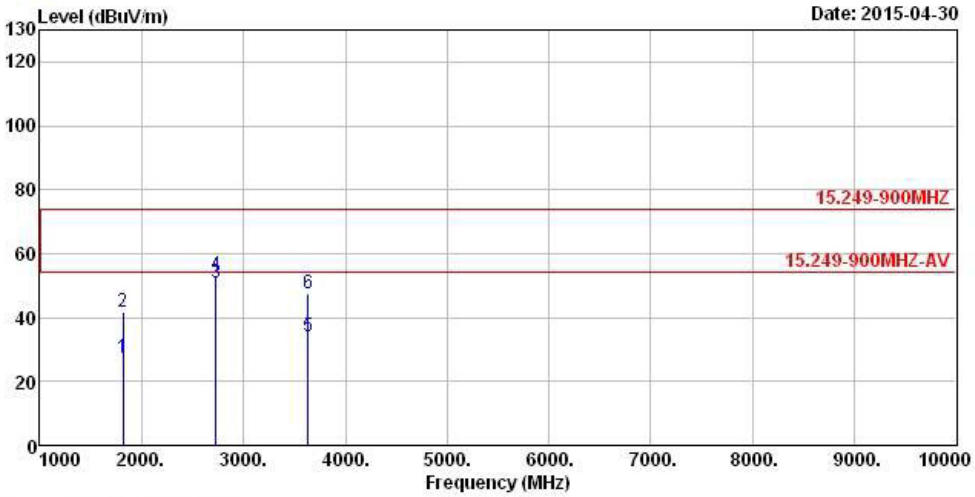

	Freq	Level	Over Limit	Limit Line	Read Level	Antenna Factor	Cable Loss	Preamp Factor	Remark
	MHz	dBuV/m	dB	dBuV/m	dBuV	dB/m	dB	dB	
1	1816.84	27.57	-26.43	54.00	30.68	26.82	2.76	32.69	Average
2	1816.84	41.70	-32.30	74.00	44.81	26.82	2.76	32.69	Peak
3	2725.26	50.85	-3.15	54.00	50.69	29.29	3.39	32.52	Average
4	2725.26	53.15	-20.85	74.00	52.99	29.29	3.39	32.52	Peak
5	3633.68	34.12	-19.88	54.00	31.03	31.71	3.91	32.53	Average
6	3633.68	47.38	-26.62	74.00	44.29	31.71	3.91	32.53	Peak

Note 1: “>20dB” means spurious emission levels that exceed the level of 20 dB below the applicable limit.
Note 2: Measurement receive antenna polarization: H (Horizontal), V (Vertical)
Note 3: For the peak measurement is fully sufficient, as the max field strength as measured with the Peak-Detector meets the AV-Limit so that the AV level does not need to be reported in addition.
Note 4: If duty cycle < 100%, average emission = peak emission + 20 log (duty cycle).
Note 5: No level of unwanted emissions exceeds the level of the fundamental emission.

Transmitter Radiated Unwanted Emissions (Above 1GHz)			
Modulation Mode	Z-wave-Transmit	**Test Freq. (FX)**	F1
Operating Function	Transmit	**Polarization**	H

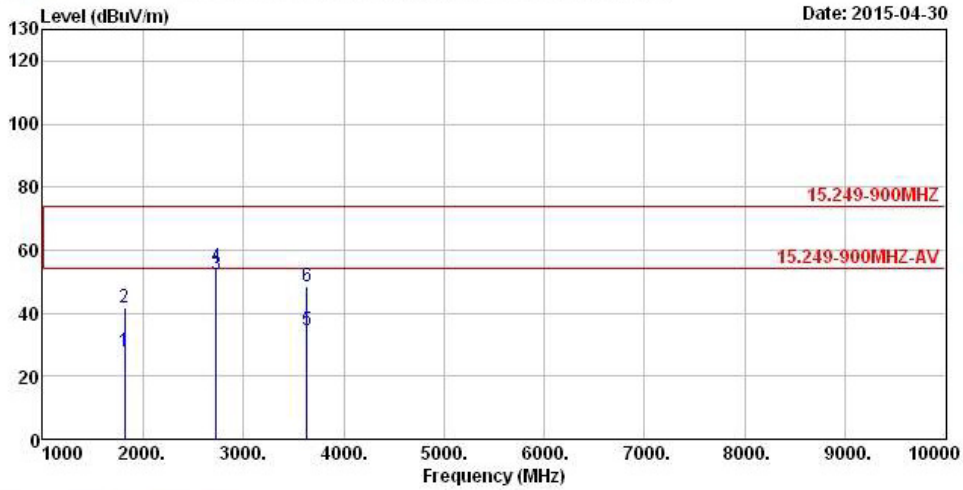

	Freq	Level	Over Limit	Limit Line	Read Level	Antenna Factor	Cable Loss	Preamp Factor	Remark
	MHz	dBuV/m	dB	dBuV/m	dBuV	dB/m	dB	dB	
1	1816.84	27.59	-26.41	54.00	30.70	26.82	2.76	32.69	Average
2	1816.84	41.67	-32.33	74.00	44.78	26.82	2.76	32.69	Peak
3	2725.26	52.43	-1.57	54.00	52.27	29.29	3.39	32.52	Average
4	2725.26	54.57	-19.43	74.00	54.41	29.29	3.39	32.52	Peak
5	3633.68	34.42	-19.58	54.00	31.33	31.71	3.91	32.53	Average
6	3633.68	48.61	-25.39	74.00	45.52	31.71	3.91	32.53	Peak

Note 1: “>20dB” means spurious emission levels that exceed the level of 20 dB below the applicable limit.
Note 2: Measurement receive antenna polarization: H (Horizontal), V (Vertical)
Note 3: For the peak measurement is fully sufficient, as the max field strength as measured with the Peak-Detector meets the AV-Limit so that the AV level does not need to be reported in addition.
Note 4: If duty cycle < 100%, average emission = peak emission + 20 log (duty cycle).
Note 5: No level of unwanted emissions exceeds the level of the fundamental emission.

4 Test Equipment and Calibration Data

Instrument	Manufacturer	Model No.	Serial No.	Characteristics	Calibration Date	Remark
EMC Receiver	R&S	ESCS 30	100174	9kHz ~ 2.75GHz	Apr. 15. 2015	AC Conduction
LISN	SCHWARZBECK MESS-ELEKTRONIK	NSLK 8127	8127-477	9kHz ~ 30MHz	Jan. 22, 2015	AC Conduction
RF Cable-CON	HUBER+SUHNER	RG213/U	07611832020001	9kHz ~ 30MHz	Oct. 31, 2014	AC Conduction
EMI Filter	LINDGREN	LRE-2030	2651	< 450 Hz	N/A	AC Conduction

Note: Calibration Interval of instruments listed above is one year.

Instrument	Manufacturer	Model No.	Serial No.	Characteristics	Calibration Date	Remark
Spectrum Analyzer	R&S	FSV 40	101500	9KHz~40GHz	May 05, 2015	RF Conducted
AC Power Source	G.W	APS-9102	EL920581	AC 0V ~ 300V	Jul. 15, 2014	RF Conducted
Signal Generator	R&S	SMR40	100116	10MHz ~ 40GHz	Jul. 31, 2014	RF Conducted

Note: Calibration Interval of instruments listed above is one year.

Instrument	Manufacturer	Model No.	Serial No.	Characteristics	Calibration Date	Remark
3m Semi Anechoic Chamber	SIDT FRANKONIA	SAC-3M	03CH03-HY	30MHz ~ 1GHz 3m	Nov. 29, 2014	Radiation
Amplifier	EMC	EMC9135	980232	9kHz ~ 1GHz	Jan. 27, 2015	Radiation
Amplifier	Agilent	8449B	3008A02120	1GHz ~ 26.5GHz	Sep. 01, 2014	Radiation
Spectrum	R&S	FSP40	100004	9kHz ~ 40GHz	Apr. 02, 2015	Radiation
Bilog Antenna	SCHAFFNER	CBL 6112D	22237	30MHz ~ 1GHz	Sep. 20, 2014	Radiation
Horn Antenna	ETS・LINDGREN	3115	6741	1GHz ~ 18GHz	Jul. 11, 2014	Radiation
Horn Antenna	SCHWARZBECK	BBHA9170	BBHA9170154	18GHz ~ 40GHz	Jan. 27, 2015	Radiation
RF Cable-R03m	Jye Bao	RG142	CB021	9kHz ~ 1GHz	Nov. 15, 2014	Radiation
RF Cable-high	SUHNER	SUCOFLEX 106	03CH03-HY	1GHz ~ 40GHz	Dec. 12, 2014	Radiation
Turn Table	EM Electronics	EM Electronics	060615	0 ~ 360 degree	N/A	Radiation
Antenna Mast	MF	MF-7802	MF780208179	1 ~ 4 m	N/A	Radiation

Note: Calibration Interval of instruments listed above is one year.

Instrument	Manufacturer	Model No.	Serial No.	Characteristics	Calibration Date	Remark
Loop Antenna	TESEQ	HLA 6120	31244	9 kHz~30 MHz	Feb. 02, 2015	Radiation

Note: Calibration Interval of instruments listed above is two years.

Appendix A. Test Photos