No. 22FF-007

E-G-Paper

NJT-905

User's manual

Ver. 1.00

Nagano Japan Radio Co., Ltd.

Please read before use

Thank you for purchasing our E-G-Paper.
Please be sure to read this instruction manual carefully and use the product correctly.
After you have read it, keep it in a safe place and read it whenever you need it.

Contents

For correct and safe use 1
1 Overview 2
2 Configuration 2
2.1 Configuration diagram（An example） 2
2.2 Appearance 3
2.3 H/W system chart 3
2.4 Equipment configuration 3
3 Memory map 4
4 General notes 5
5 Precautions for use 6
5.1 For continuous operation 6
5.2 For communication where there are multiple RFID tags, including E-G-Paper 6
6 Communication with the RFID scanner 7
7 Arrangements for good communication with the RFID scanner 8
7.1 When the RFID scanner is set to **vertical polarization** 8
7.1 When the RFID scanner is set to **horizontal polarization** 10
7.1 When the RFID scanner is set to **circular polarization** 12
8 Operating environment 13
9 Product warranty 14
10 Specification 15
10.1 General specification 15
10.2 Functional specification 1 (Display rewriting) 15
10.3 Functional specification 2 (Read and write internal memory) 15
11 Contact details 16

For correct and safe use

Incorrect handling may result in injury to persons and damage to property.
Please read the follow instructions carefully and use the product correctly.

The following three indications classify and explain the degree of harm or damage that may occur if the product is handled incorrectly.

Danger	This symbol indicates a 'high risk of death or serious injury to persons'.
Warning	This is indication of a 'death or serious injury is likely'.
Caution	This sign indicates 'risk of injury to persons and risk of damage to property'.

Warning

Do not disassemble or modify.

Failure to do so may result in fire, electric shock, injury, radio leakage or malfunction.
Contact us if the inside of this equipment requires inspection or repair.

Keep the reader/writer away from medical equipment (e.g. pacemakers).

This product operates by receiving radio signals in the 920 MHz band.
When using reader/writers and E-G-Paper, take care to ensure that medical equipment does not malfunction.

Caution

Do not use in damaged condition.

It may produce sharp pieces of debris, which may cause injury.
If you notice any damage to the product, stop using it immediately.

1 Overview

This operating manual describes E-G-Paper (NJT-905).

The main functions are the ability to rewrite its own display and read/write data in the internal memory. It is designed for use in electronic signage on production lines and product displays on containers and racks.

2 Configuration

2.1 Configuration diagram（An example）

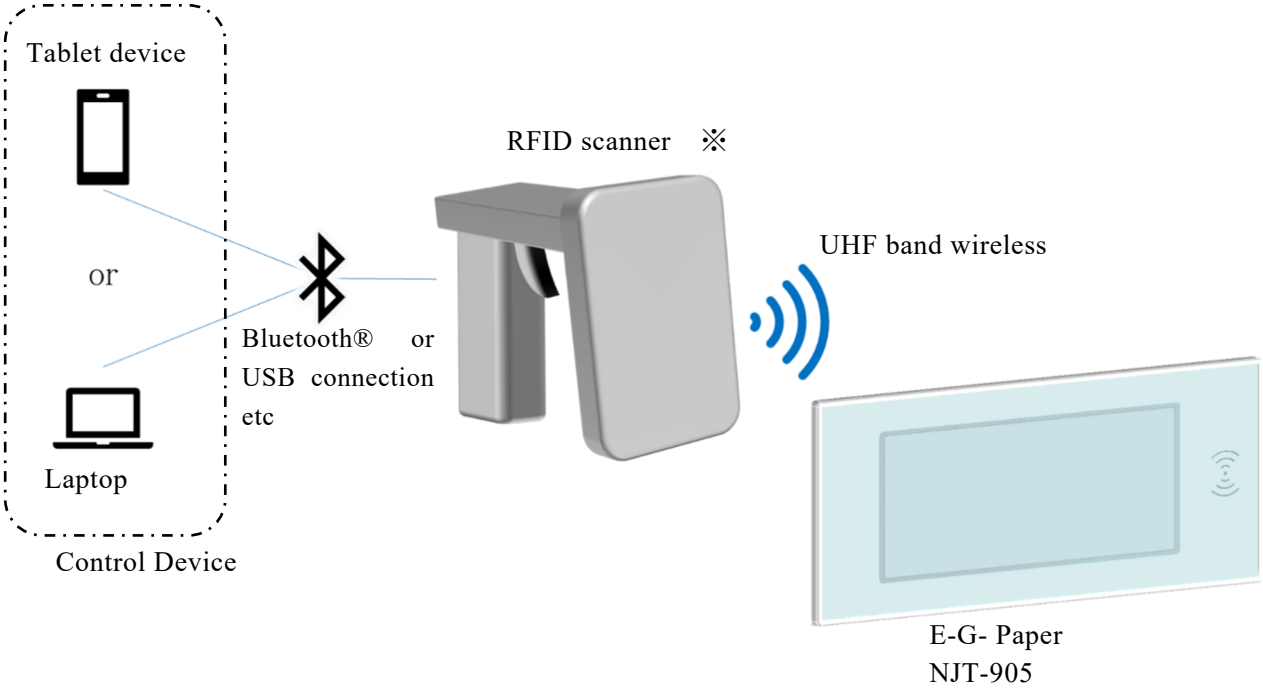

※RFID scanner not included in product.

2.2 Appearance

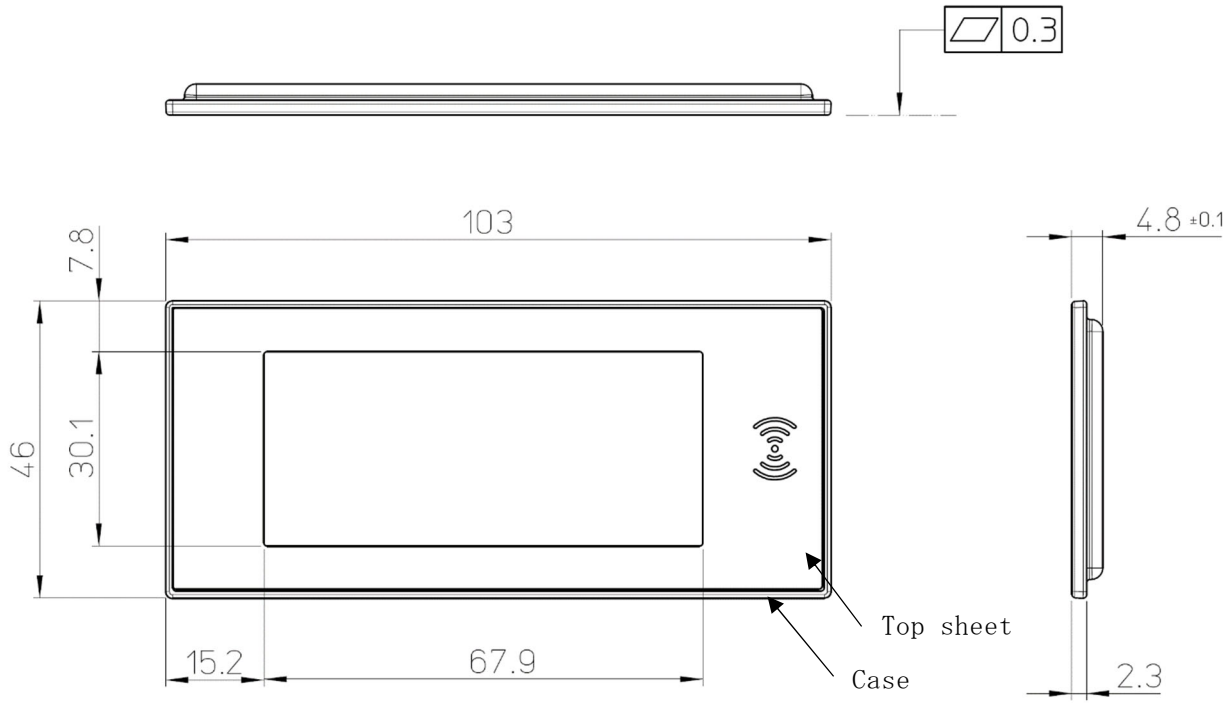

Material of top sheet	: Polyester
Material of case	: PC+ABS resin

2.3 H/W system chart

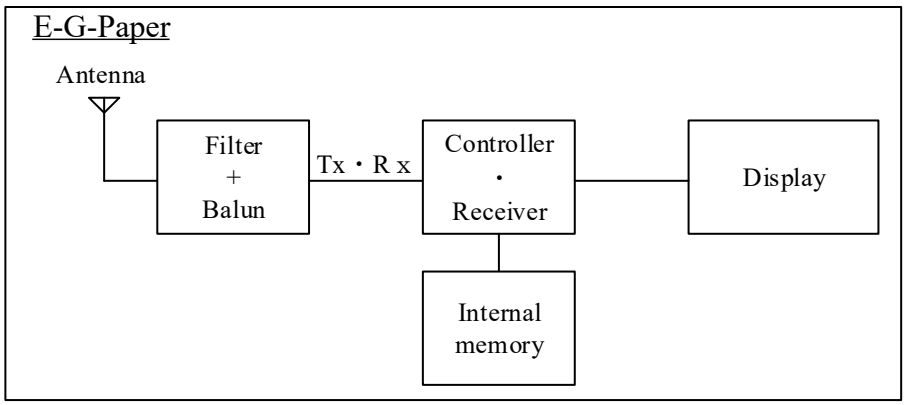

2.4 Equipment configuration

No	Product name	Model name	QTY	Note
1	E-G-Paper	NJT-905	1	The product itself

3 Memory map

See Table 3.1 for the memory map of E-G-Paper. The memory addresses that can be used for the read/write function to the internal memory are WordAdr = 0000h to 07FFh in the USER bank (MemBank = 11). Do not use WordAdr=0800h to 0F3Fh as this area is used for switching the display.

Memory addresses are in words, so the capacity per address is 16 bits (2 bytes).

Table 3.1 RFID LSI memory map

Memory Bank		Memory Address	RF Communication					
MemBank [1:0]	Definition	WordAdr [13:0]	Read	Write	BlockWrite	BlockErase	Block Permalock	Select
11	USER	0000h～07FFh	○	○	○	○	○	○
		0800h～0F3Fh	※					
10	TID	0000h～000Ch	○	×	×	×	×	○
01	EPC	0000h～001Fh	○	○	○	○	×	○
00	RESERVED	0000h～003Fh	○	○	×	×	×	×

※This area is used for switching the E-G-Paper display.

4 General notes

This document describes the E-G-Paper (NJT-905). We do not sell, manufacture or support the RFID scanner and other connection models mentioned in this manual, including hardware and software.

Please pay attention to the written below when operating this product.

- Change or modifications not expressly approved by the party responsible for compliance could void the user's authority to operate the equipment.
- If the product gets dirty, wipe it off with a soft cloth soaked in water or neutral detergent diluted with water, wringing it out well, and then wipe it off again with a dry cloth so that no water or detergent remains. Use of organic solvents such as alcohol, thinner, benzene, or abrasive detergents may cause malfunction.
- Do not soak the product directly in hot or cold water, or splash water on it.
- This product is made with precision electronic components. Do not fall it off, bend it, or impact it.
- Do not install the product under the sunlight. This may cause deterioration of the equipment.
- Do not place any noise sources near the equipment, as this may significantly degrade the wireless performance and prevent proper communication.
- Do not put a magnet near the display. If a magnet is placed near the e-paper display, it may leave a mark and the display may not be switched correctly.
- The case is made of a material that is easily scratched. Please do not use the case with being cracked or peeled off the front panel, because the internal waterproof function will be broken.
- This product is an industrial equipment. When disposing of this product, please dispose of it properly in accordance with the law in your area.
- Depending on the operating environment and prolonged storage, the contrast of the E-G-Paper may be deteriorated.
- This device complies with part 15 of the FCC Rules. Operation is subject to the following two conditions: (1) This device may not cause harmful interference, and (2) this device must accept any interference received, including interference that may cause undesired operation.
- Note: This equipment has been tested and found to comply with the limits for a Class B digital device, pursuant to part 15 of the FCC Rules. These limits are designed to provide reasonable protection against harmful interference in a residential installation. This equipment generates, uses and can radiate radio frequency energy and, if not installed and used in accordance with the instructions, may cause harmful interference to radio communications. However,there is no guarantee that interference will not occur in a particular installation. If this equipment does cause harmful interference to radio or television reception, which can be determined by turning the equipment off and on,the user is encouraged to try to correct the interference by one or more of the following measures:
  −Reorient or relocate the receiving antenna.
  −Increase the separation between the equipment and receiver.
  −Connect the equipment into an outlet on a circuit different from that to which the receiver is connected.
  −Consult the dealer or an experienced radio/TV technician for help.

The specifications and appearance are subject to change without notice for improvement.

5 Precautions for use

5.1 For continuous operation

The product contains a capacitor with a large capacitance. If commands are to be issued to the same E-G-Paper in succession, allow a period of 10 seconds after the previous operation before performing the next one.If such a problem occurs, stop the radio waves being sent to the E-G-Paper once and discharge the remaining capacitor charge before resuming communication.

5.2 For communication where there are multiple RFID tags, including E-G-Paper

If there are several E-G-Paper within the reader/writer radio emission area, they may control E-G-Paper that is not intended. In addition, if there are multiple RFID tags within the reader/writer radio emission range, the power that can be transmitted per tag may be reduced, resulting in a lower communication distance. Please design the system with due consideration for communication interference in the E-G-Paper operating environment.

6 Communication with the RFID scanner

Refer to the manual of the RFID scanner to be used for information on how to rewrite the display of the E-G-Paper and how to carry out read/write of the internal memory data.

We recommend the following RFID scanner.

Name of product	Type name	Manufacturer	Note
Fixed Type RFID Scanner	UR50	DENSO WAVE INCORPORATED	
Fixed Type RFID Scanner	UR40	DENSO WAVE INCORPORATED	
High-powered Handy Scanner	SP1	DENSO WAVE INCORPORATED	
Fixed Type RFID Scanner	UTR-SU01-3CH	TAKAYA Corporation	I/F：USB
Fixed Type RFID Scanner	UTR-SN01-3CH	TAKAYA Corporation	I/F：TCP/IP

7 Arrangements for good communication with the RFID scanner

To ensure a good communication between the E-G-Paper and RFID scanner, it is recommended to align the center of the E-G-Paper with the center of the RFID scanner radio wave emission direction. The following tables show the recommended positioning when the UR50 (Denso Wave), is configured for vertical polarization, horizontal polarization, and circular polarization.

Note that the distances and angles shown in the figures do not guarantee a good operation in each operating environment.

7.1 When the RFID scanner is set to **vertical polarization**

The following figures show placement examples of E-G-Paper when RFID scanner is set to vertical polarization. The vertical polarization of RFID scanner means that the electric field is generated in the Y-axis direction in the figure.

- If the E-G-Paper is placed upright in the Y-axis direction, good communication can be achieved. Good communication can also be achieved either when the display side of the E-G-Paper is facing RFID scanner or when it is facing the same direction as the RFID scanner. Referring Figure 7.1.
- When the E-G-Paper is tilted from the Y-axis to the X-axis, the communication distance will be reduced and be a low communication. When the tag is tilted by 45°, the communication will be a quarter of the normal distance. When the tag is tilted by 90°, it will not be able to communicate even it is close to the RFID scanner. Referring Figure 7.2.
- If the tag is tilted 90°, it will not be able to communicate with RFID scanner even it is placed close to the RFID scanner. Referring Figure 7.3.
- If the E-G-Paper is moved away from the Z-axis, make it closer at the same distance to RFID scanner, then it will be possible to communicate. Referring Figure 7.4.

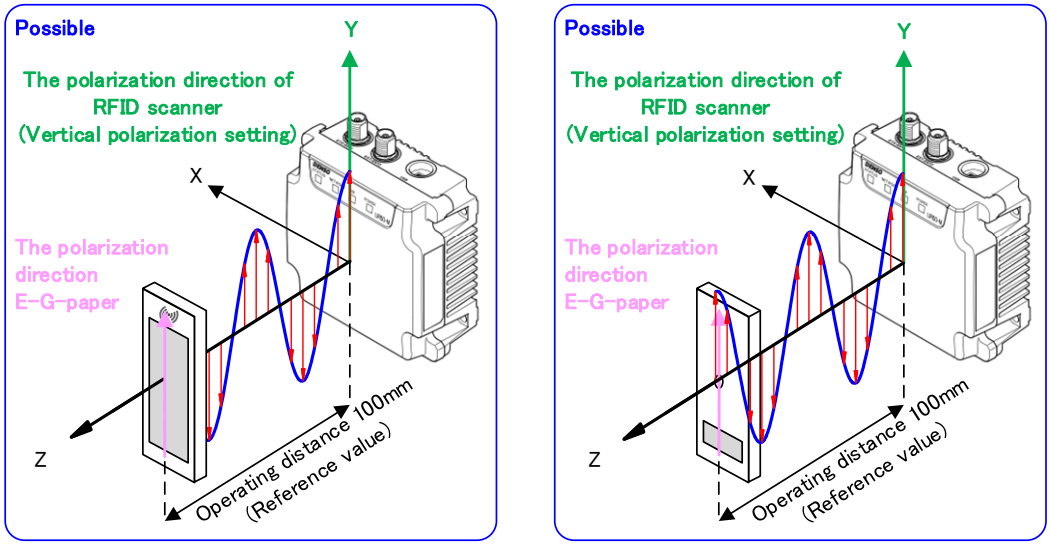

Figure 7.1 An Example of Good Communication Arrangement

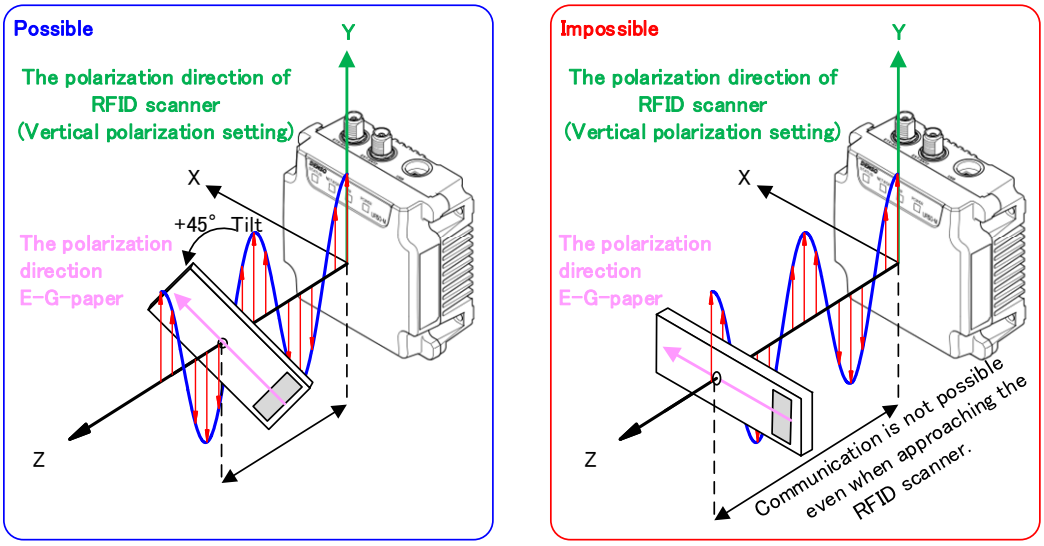

Figure 7.2 E-G-Paper is tilted

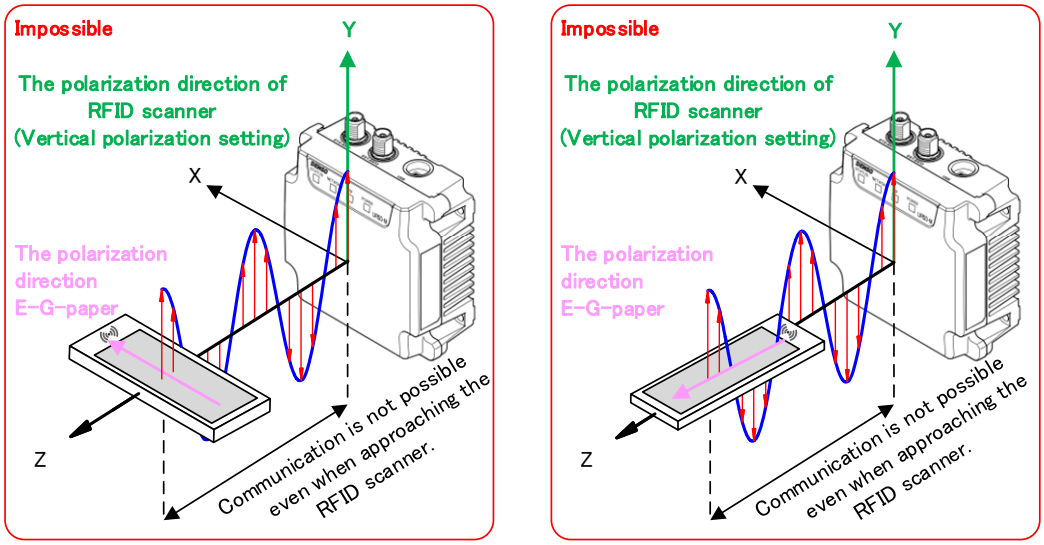

Figure 7.3 An Example of Unable Communication Arrangement

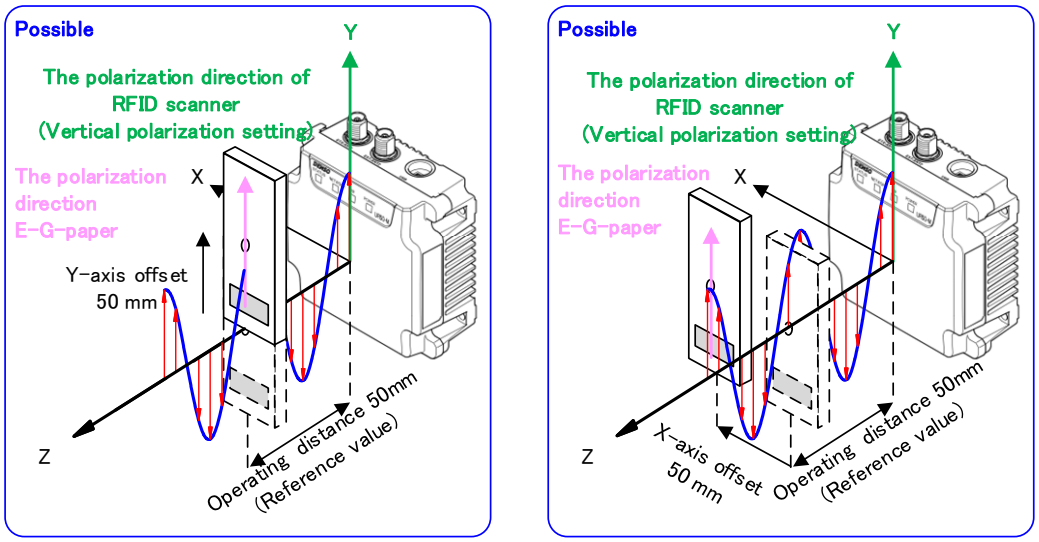

Figure 7.4 An Example of Arrangement that E-G-Paper is Offset

7.1 When the RFID scanner is set to **horizontal polarization**

The following figures show placement examples of E-G-Paper when RFID scanner is set to horizontal polarization. The horizontal polarization of the RFID scanner refers to the generation of an electric field in the X-axis direction in the figure.

- Good communication can be achieved when E-G-Paper is placed in the X-axis direction. Good communication can be achieved either when the display side of the tag is facing the RFID scanner or when it is facing the same direction as the RFID scanner. Referring Figure 7.5.
- When the tag is tilted by 45°, the communication distance drops to about a quarter of the normal value. When it is tilted by 90°, the tag cannot communicate with the RFID scanner even it is close to the RFID scanner. Referring Figure 7.6.
- If the display surface of the tag is facing the X-axis, it will not be able to communicate with the RFID scanner even it is placed close to it. Referring Figure 7.7.
- If the E-G-Paper is moved away from the Z-axis, make it closer in the same distance to RFID scanner, then it will be possible to communicate. Figure 7.8.

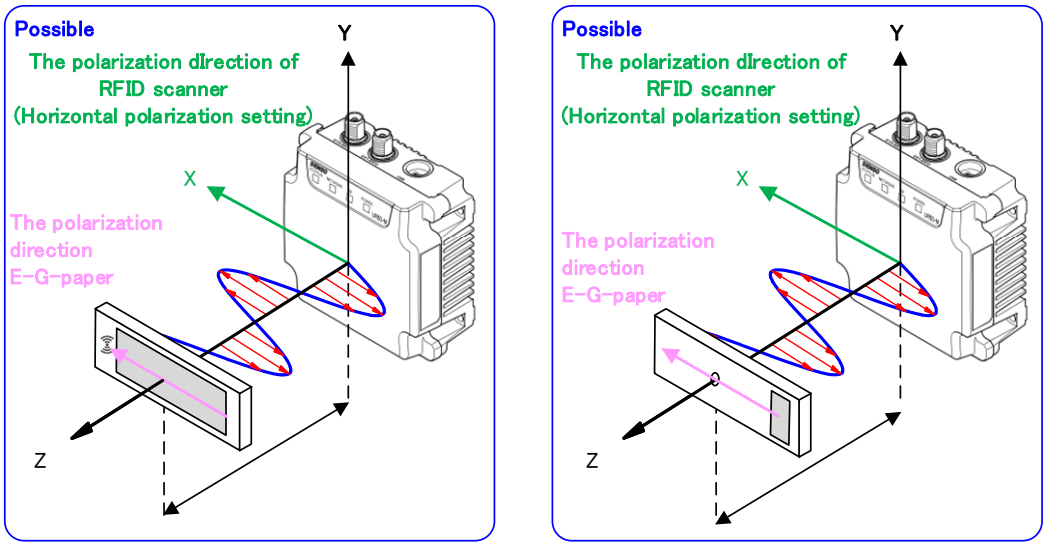

Figure 7.5 An Example of Good Communication Arrangement

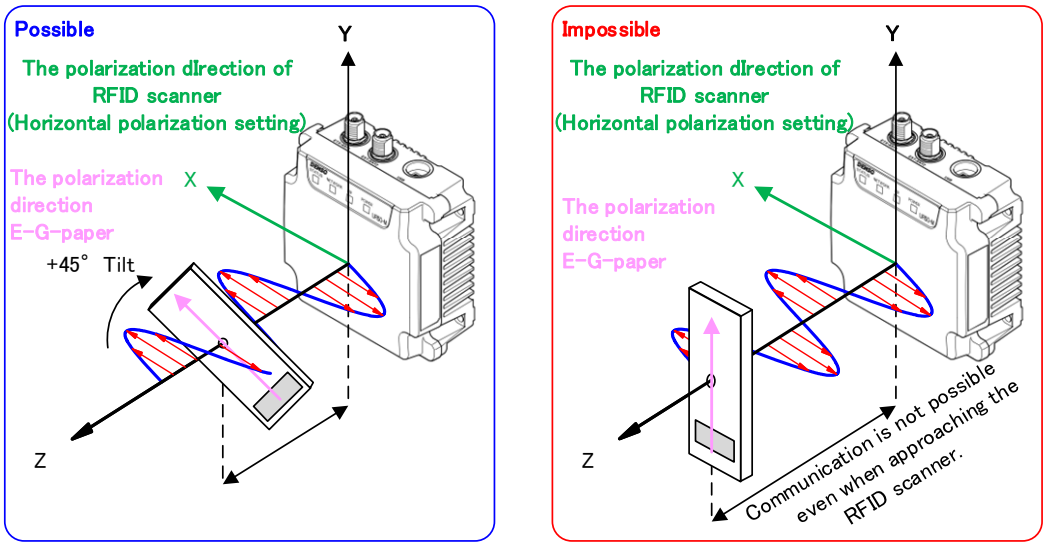

Figure 7.6 E-G-Paper is Tilted

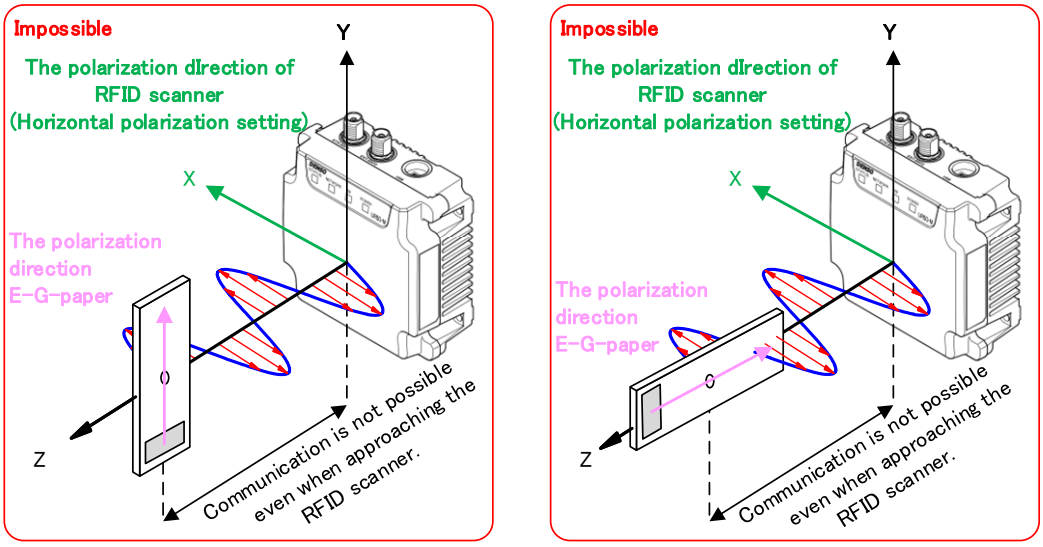

Figure 7.7 An Example of Unable Communication Arrangement

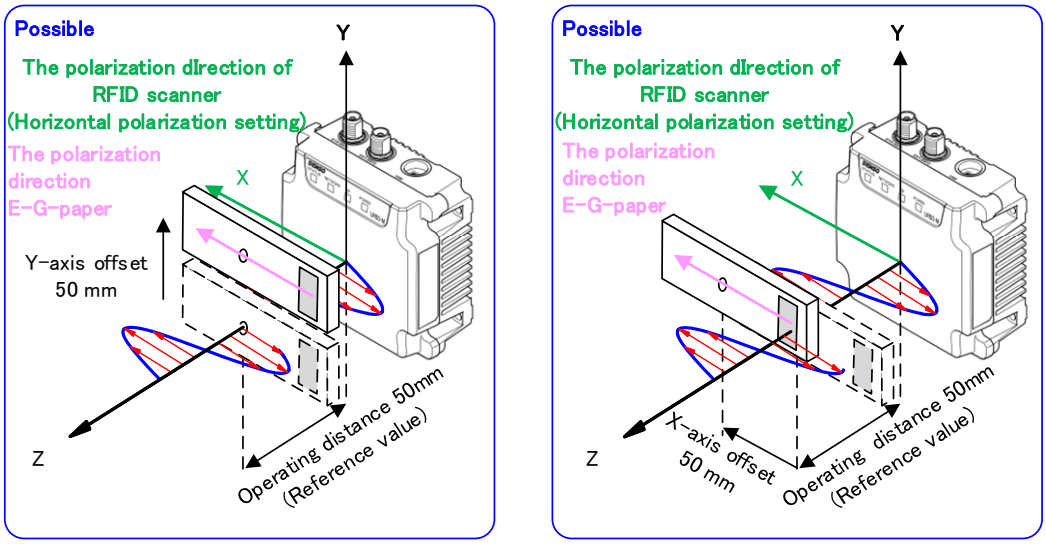

Figure 7.8 An Example of Arrangement that E-G-Paper is Offset

7.1 When the RFID scanner is set to **circular polarization**

Since E-G-Paper have linearly polarized antenna, the operating distance will be reduced to about a quarter of that with linearly polarized antennas when the RFID scanner is in circularly polarized. However, it will be able to communicate in any directions either front or back. See Figure 7.9.

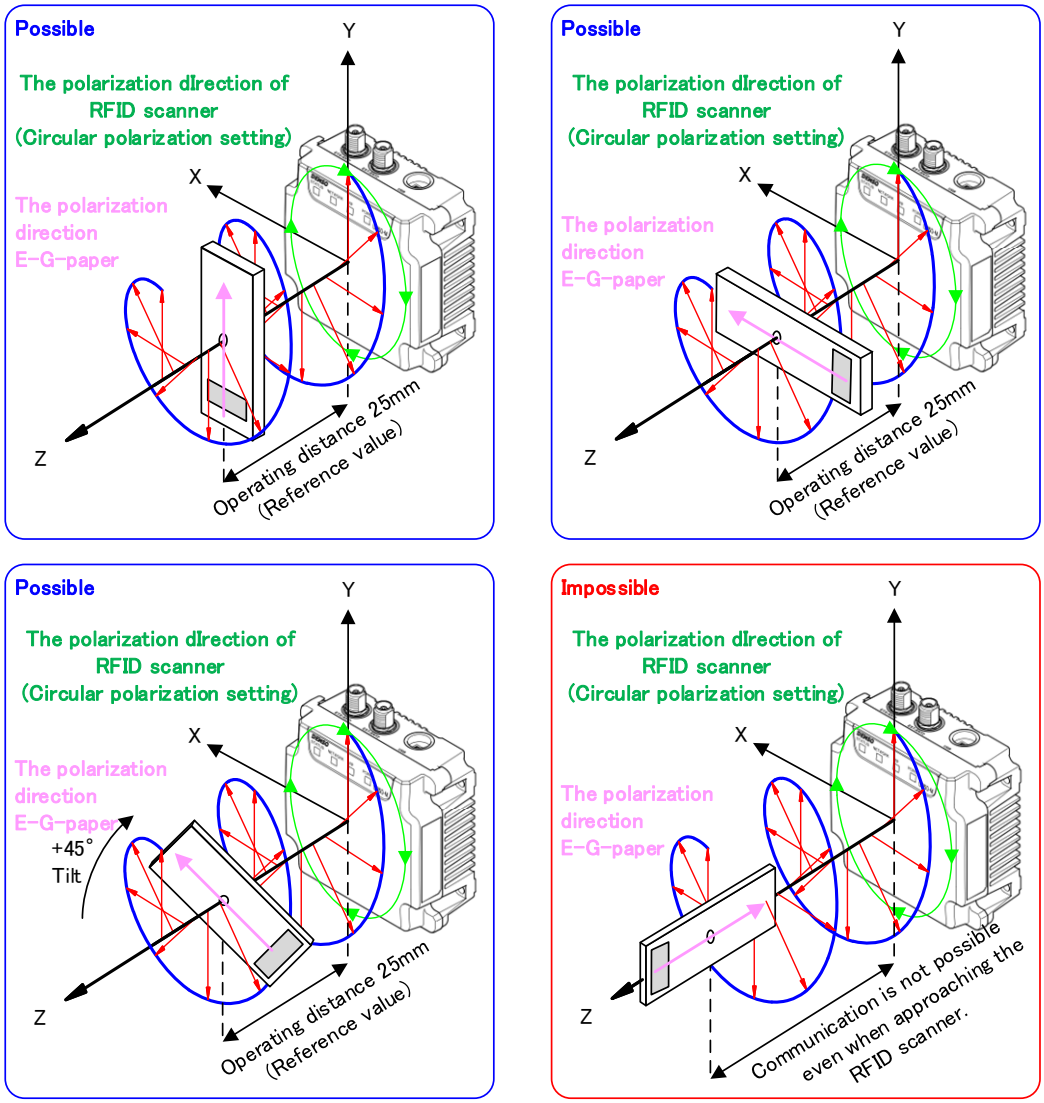

Figure 7.9 An Arrangement Example of the RFID scanner in circular polarization

8 Operating environment

When using E-G-Paper mounted on containers or walls, the environment in which they are mounted may may be reduced due to the environment in which the tag is installed. Please check before use.

（1） Mounting location

If the product is installed on the following materials, the communication distance may be reduced or the product may become inoperable.

- Metal
- Glass
- Carbon-rich materials（Conductive resins, etc.）
- Magnets

（2） To reduce the influence of these materials

Methods to reduce the impact of the above materials.

- Use a plastic plate or other means to create a distance as shown in Fig. 8.1.
（Select the resin thickness and material according to the use environment.）
- Changing the RFID scanner configuration or layout, see section 7.

（3） Magnets

If a magnet is placed close to the E-G-Paper, it may leave a magnet mark on the display area.

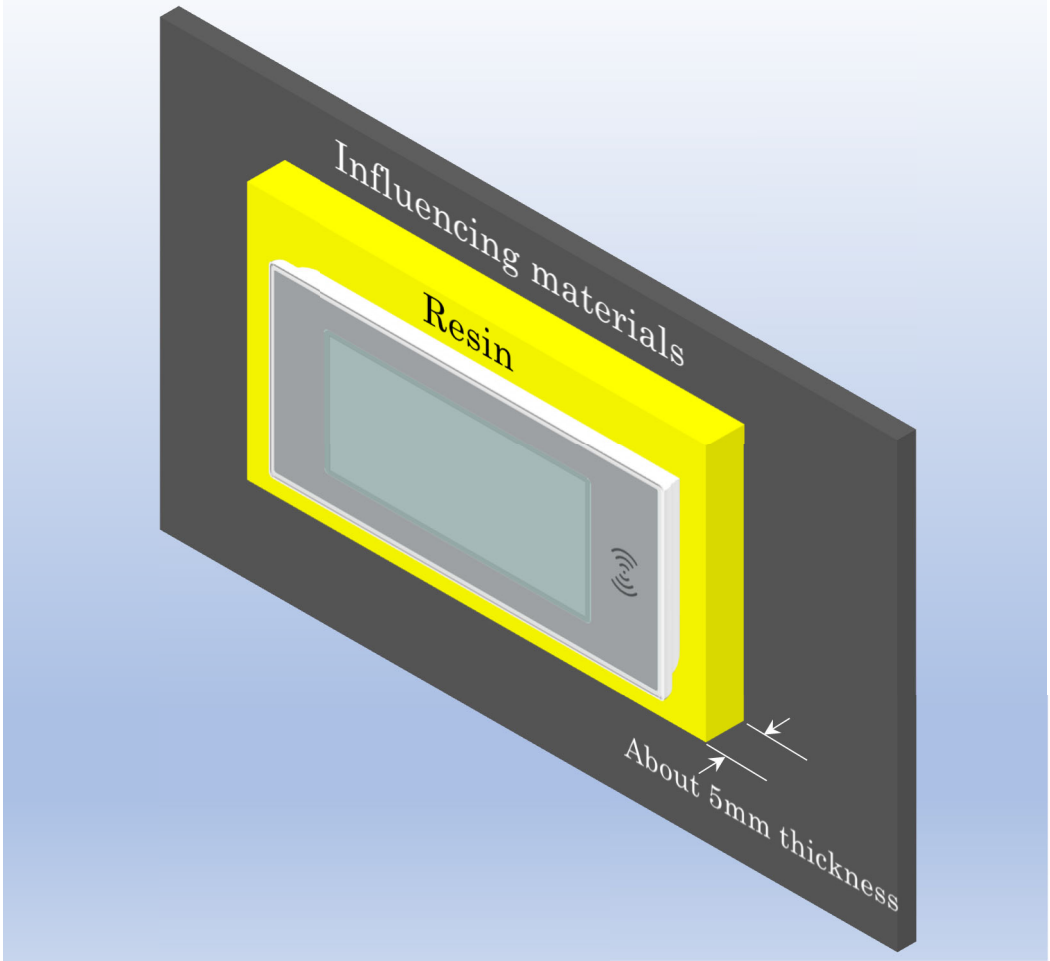

Figure 8.1 Example of E-G-Paper use

9 Product warranty

If, within 12 months of delivery, a fault occurs that is clearly our responsibility, we will repair or replace the product free of charge. However, the repair of the above-mentioned defective products is only possible if they have been returned to us.

If 12 months have elapsed since delivery, the product shall be repaired or replaced for a fee.

In the following cases, the product shall be repaired or replaced for a fee.

- Malfunctions and damage caused by transport, movement, dropping or other impact after delivery.
- Failure and damage due to fire, earthquake, flood, lightning, other natural disasters, pollution or abnormal voltage.
- Failures and damage caused by other adjacent equipment.
- Due to misuse, improper repair, modification or misconnection
- Caused by natural wear and tear and deterioration of consumable parts.
- Occurred in environments outside the various use ranges specified in the specification.
- Incurred as a result of doing something forbidden in the operating instructions.
- Other cases where, based on our judgement, a free of charge guarantee is not granted.

We are not liable for any accident or economic damage resulting from the equipment not operating properly due to accidental failure or for reasons beyond our control.

10 Specification

10.1 General specification

No	Category	Specification	Notes
1	Dimensions	103±1(W)×46±1(D)×4.8±0.1(H)mm	
2	Weight	About 25g	
3	Power supply	Supplying power from UHF band wireless	Supplies power from RFID scanner
4	Operating temperature	-20～+55℃ ※1	
5	Operating humidity	Under 85%RH Keep away from condensation	
6	Environment	Indoor installation	
7	Water and dust proof	IP54	
8	Conformity	RoHS10	
9	Antenna	Internal	
10	Product life	5 years	Depends on e-paper specifications.

10.2 Functional specification 1 (Display rewriting)

No	Category	Specification	Notes
1	Operating temperature (Rewriting display)	+0～+40℃	When rewriting display
2	Operating distance	Less than 10cm ※2	Using RFID scanner UR50 (Denso wave)
3	Display category	e-paper	
4	Display size	About 2.9 inch	
5	Display resolution	128 (length) ×296 (width) pixel	About 112dpi
6	Display color	Black and White	
7	Rewritable times	1million times	With e-paper stand-alone specifications.

10.3 Functional specification 2 (Read and write internal memory)

No	Category	Specification	Notes
1	Operation temperature (Rewriting memory)	-20～+55℃	When read/writing internal memory
2	Operating distance	Less than 10cm ※2	Using RFID scanner UR50 (Denso wave)
3	Memory type	FRAM nonvolatile memory	
4	Memory storage	8k byte（Includes memory for display）	Display memory storage : About 4k byte
5	Memory retention period	10 years	
6	Rewritable (erasable) number of times	10^{13} times (10 billion times)	Stand-alone specifications for internal memory (FRAM).

※1 For the temperature range during display rewriting, see section 10.2.

※2 The communication range is the value when a Denso Wave UR50 is used in the linear polarization setting and there are no obstructions or blockages around the RFID scanner and the E-G-Paper. The communication range is not guaranteed in individual environments, such as when other RFID scanner are used or when there are objects blocking radio waves around the RFID scanner or E-G-Paper. See chapter 7 for the position and optimal placement of the built-in antenna.

11 Contact details

Nagano Japan Radio Co., Ltd. ICT Sales Dept.
TEL 03-3228-3313
FAX 03-3228-3319

〒164-0001
3F, NAKANO CENTRAL PARK EAST, 4-10-1 Nakano Nakano-ku, Tokyo 164-0001, Japan
http://www.njrc.jp

Issued date: May 25, 2022