INSTRUCTION MANUAL

IFBT4-VHF

Synthesized VHF IFB Transmitter

Featuring Digital Hybrid Wireless® Technology

U.S. Patent 7,225,135

Fill in for your records:

Serial Number:

Purchase Date:

LECTROSONICS®
Rio Rancho, NM, USA
www.lectrosonics.com

Table of Contents

General Technical Description 4
Introduction 4
Audio Input Interface 4
Digital Hybrid Wireless® Technology 5
Audio Signal Processing 5
Pilot Tone Squelch System 5
Frequency Agility 5
Power Delay 5
Microcontroller 5
Transmitter 5
Antenna Port 5
Front Panel Controls and Functions 6
IFBT4 Front Panel 6
OFF/TUNE/XMIT Switch 6
Power Up Sequence 6
Main Window 6
Frequency Window 6
Audio Input Gain Window 6
Setup Window 6
COMPAT Setup Screen 7
Lock/Unlock Panel Buttons 7
IFBT4 Menu Diagram 7
Rear Panel Controls and Functions 8
IFBT4 Rear Panel 8
XLR Jack 8
Power Input Connector 8
Antenna 8
Input Configuration (Mode Switches) 8
Frequency Selection 9
Installation and Operation 10
Adjust Audio Input Level 10
Accessories 11
Troubleshooting 12
Specifications 13
Service and Repair 14
Returning Units for Repair 14

Consumer Alert for US Users - FCC Order DA 10-92

Most users do not need a license to operate this wireless microphone system. Nevertheless, operating this microphone system without a license is subject to certain restrictions: the system may not cause harmful interference; it must operate at a low power level (not in excess of 50 milliwatts); and it has no protection from interference received from any other device.

Purchasers should also be aware that the FCC is currently evaluating use of wireless microphone systems, and these rules are subject to change. For more information, call the FCC at 1-888- CALL-FCC (TTY: 1-888-TELL-FCC) or visit the FCC's wireless microphone website at www.fcc.gov/cgb/wirelessmicrophones. To operate wireless microphone systems at power greater than 50mW, you must qualify as a Part 74 user and be licensed. If you qualify and wish to apply for a license go to: http://www.fcc.gov/Forms/Form601/601.html

General Technical Description

Introduction

This version of the IFB “base station” transmitter operates in the television broadcast band from 174 to 216 MHz (US TV channels 7 through 13). It will tune across the entire band, so clear frequencies can be found almost anywhere.

The VHF spectrum has not been impacted by the spectrum auctions and re-packing as much as the UHF spectrum, so the idea behind this product design is to operate an IFB system in the VHF band and free up space for wireless microphones in the UHF band.

The IFBT4 features a graphics type backlit LCD display with a menu system similar to those provided on other Lectrosonics receivers. The interface can be ***Locked*** to prevent a user from changing any settings but still allow browsing of the current settings.

The unit can be powered from any external DC source of 6 to 18 Volts at 200 mA or from the provided 12 Volt power supply with a locking power connector. The power inlet has an internal self-resetting fuse and reverse polarity protection.

The housing is contructed of machined aluminum extrusion with a durable electrostatic powder coating. The front and rear panels are machined aluminum with an anodized finish and laser etched engraving. The included antenna is a right angle, ¼ wavelength whip with a BNC connector.

Audio Input Interface

The standard 3 pin XLR connector on the rear panel handles all audio inputs. The four DIP switches allow setting the input sensitivity for low levels, such as microphone inputs, or for high level line inputs, balanced or unbalanced. The switches also offer special settings to provide the proper input configurations to match to Clear Com, RTS1, and RTS2 intercom systems. Pin 1 of the XLR input connector is normally connected to ground but an internal jumper can be moved if a floating input is desired. Phantom supplied microphones may be connected without the need for DC isolation at the input of the transmitter.

A user-selectable low frequency roll-off can be set for 35 Hz or 50 Hz as needed to suppress low frequency acoustic noise or to extend the frequency response.

DSP-controlled Input Limiter

The transmitter employs a digitally-controlled analog audio limiter prior to the analog-to-digital converter. The limiter has a range greater than 30 dB for excellent overload protection. A dual release envelope makes the limiter acoustically transparent while maintaining low distortion. It can be thought of as two limiters in series, connected as a fast attack and release limiter followed by a slow attack and release limiter. The limiter recovers quickly from brief transients, so that its action is hidden from the listener, but recovers slowly from sustained high levels to keep audio distortion low and preserve short term dynamic changes in the audio.

IFBT4-VHF Transmitter Block Diagram

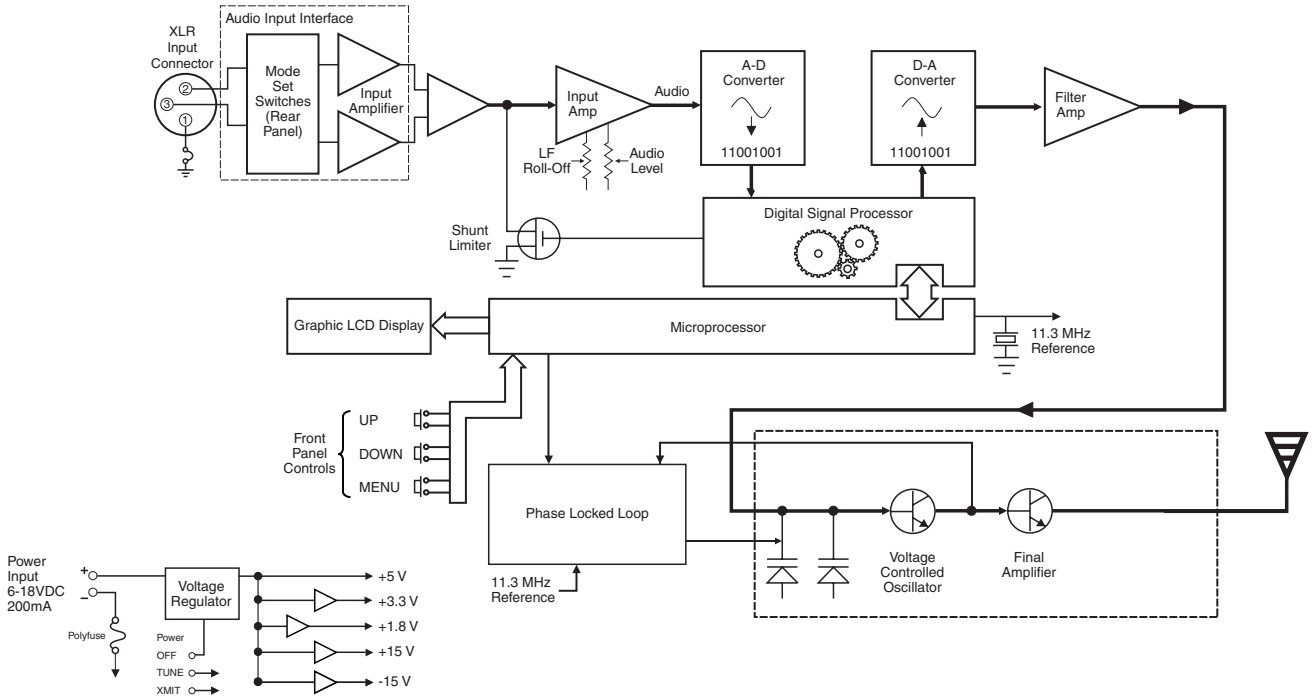

Digital Hybrid Wireless® Technology

The design is based upon the patented Lectrosonics Digital Hybrid Wireless® system.* While at the time of the first release of the product, there is only a companion analog receiver, the Digital Hybrid Wireless system is included for compatibility with future products.

Audio Signal Processing

Lectrosonics IFB systems use a single band compandor and pre-emphasis/de-emphasis to reduce noise. This signal processing is generated and applied by the DSP for accuracy and clean handling of signal dynamics.

The DSP also provides the ability to employ compatibility modes for use with other wireless equipment in the VHF spectrum that may come along in the future.

Pilot Tone Squelch System

Lectrosonics IFB systems use a supersonic “pilot tone” to control the squelch activity in the receiver. A valid RF signal will include the pilot to signal the audio output to open. Even strong interference on the same frequency cannot open the audio output if the pilot tone is not present.

During normal operation, an IFB receiver will listen for the distinctive pilot tone, remaining silent (squelched) until the pilot tone is detected. The pilot tone is located well above audio frequencies and is never passed through to the receiver’s audio output.

Frequency Agility

The IFBT4 transmitter uses a synthesized, frequency selectable main oscillator. The frequency is extremely stable over a wide temperature range and over time. The transmitter’s standard tuning range covers 239 frequencies from 174 to 216 MHz in 175 kHz steps. to alleviate interference problems in mobile applications.

Power Delay

When powering the transmitter on and off, and when switching between the XMIT and TUNE modes, intelligent circuitry adds brief delays in order to allow time for circuits to stabilize, both locally and in the matching receiver. These delays prevent clicks, thumps and other noise in the audio.

Microcontroller

The microcontroller oversees most system operations, including RF frequency and output, DSP audio functions, buttons and display, and more. User settings are stored in non-volatile memory, so they are retained even when the power is turned off.

Transmitter

The transmitter operates at the maximum allowed RF power level to ensure a clean signal free of dropouts and noise. All transmitter circuits are buffered and filtered for excellent spectral purity. The clean transmitted signal reduces the chances for interference in multiple transmitter installations.

Antenna Port

The 50 Ohm BNC output connector will work with standard coaxial cabling and remote antennas.

Front Panel Controls and Functions

IFBT4 Front Panel

OFF/TUNE/XMIT Switch

OFF Turns the unit off.

TUNE Allows all functions of the transmitter to be set up, without transmitting. The operating frequency may only be selected in this mode.

XMIT Normal operating position. The operating frequency may not be changed in this mode, though other settings may be changed, so long as the unit isn't "Locked."

Power Up Sequence

When power is first turned on, the front panel LCD display steps through the following sequence.

1. Displays Model and the firmware verson (e.g. IFBT4VHF and V1.0).
2. Displays the current compatibility mode setting (e.g. COMPAT IFB).
3. Displays the Main Window.

Main Window

The Main window is dominated by an audio level meter, which displays the current audio modulation level in real time. In TUNE mode, a blinking capital "T" is displayed in the lower left corner to remind the user that the unit is not yet transmitting. In XMIT mode, the blinking "T" is replaced by an antenna icon.

Audio limiting is indicated when the audio bargraph extends all the way to the right and widens somewhat. Clipping is indicated when the zero in the lower right corner changes to a capital "C".

The Up and Down buttons are disabled in this Window.

Frequency Window

Pressing the MENU button once from the Main window navigates to the Frequency window. The Frequency window displays the current operating frequency in MHz, as well as the standard Lectrosonics hex code. Also displayed is the UHF television channel to which the selected frequency belongs.

In XMIT mode, it is not possible to change the operating frequency.

In TUNE mode, the Up and Down buttons may be used to select a new frequency.

The UP and DOWN buttons navigate in 175 kHz increments. Holding the MENU butto+Up and MENU+Down move 2.8 MHz at a time. In any of the various group tuning modes, the currently selected group identifier is displayed to the left of the hex code, and the Up and Down buttons navigate among the frequencies in the group. In factory group tuning modes A thru D, MENU+Up and MENU+Down jump to the highest and lowest frequencies in the group. In user group tuning modes U and V, MENU+Up and MENU+Down permit access to frequencies not currently in the group.

Pressing and holding the Up or Down button invokes an autorepeat function, for faster tuning.

Audio Input Gain Window

Pressing the MENU button once from the Frequency window navigates to the Audio Input Gain window. This window greatly resembles the Main window, with the exception that the current audio input gain setting is displayed in the upper left corner. The Up and Down buttons may be used to alter the setting while reading the realtime audio meter to determine what setting works best.

The gain range is -18 dB to +24 dB with 0 dB nominal center. The reference for this control can be changed with the rear panel MODE switches. See the **Installation and Operation** section for more information on the MODE switches.

Setup Window

Pressing the MENU button once from the Audio Input Gain window navigates to the Setup window. This window provides access to a menu for various setup screens.

Initially the active menu item is EXIT. Pressing the Up and Down keys permits navigation to the menu items: COMPAT and ROLLOFF.

Pressing the MENU button selects the current menu item. Selecting EXIT navigates back to the Main window. Selecting any other item navigates to the associated setup screen.

ROLLOFF Setup Screen

The ROLLOFF setup screen controls the low frequency audio response of the IFBT4 by moving the 3 dB corner

of a 4 pole lowpass digital filter. The 50 Hz setting is the default, and should be used whenever wind noise, HVAC rumble, traffic noise or other low frequency sounds may degrade the quality of the audio. The 35 Hz setting may be used in the absence of adverse conditions, for a fuller bass response.

Press MENU to return to the Setup window.

COMPAT Setup Screen

The COMPAT setup screen selects the current compatibility mode, for interoperation with various types of receivers. The available modes are:

IFB - Lectrosonics IFB compatibility mode. This is the default setting and is the appropriate setting to use with the Lectrosonics IFBR1A or a compatible IFB receiver.

400 - Lectrosonics 400 Series. This mode offers the best audio quality and is recommended if your receiver supports it.

Press MENU to return to the Setup window.

Lock/Unlock Panel Buttons

To enable or disable the control panel buttons, navigate to the Main Window and press and hold the MENU button for about 4 seconds. Continue holding the button as a progress bar extends across the LCD. When the bar reaches the right side of the screen, the unit will toggle to the opposite locked or unlocked mode.

IFBT4 Menu Diagram

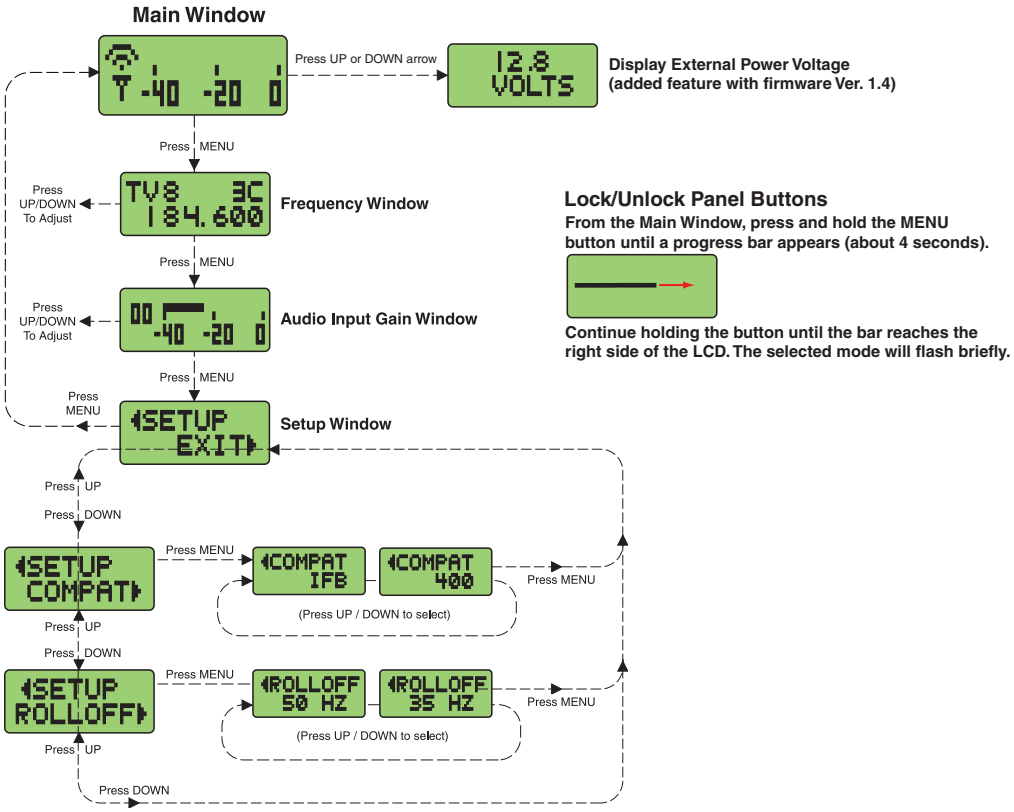

Rear Panel Controls and Functions

IFBT4 Rear Panel

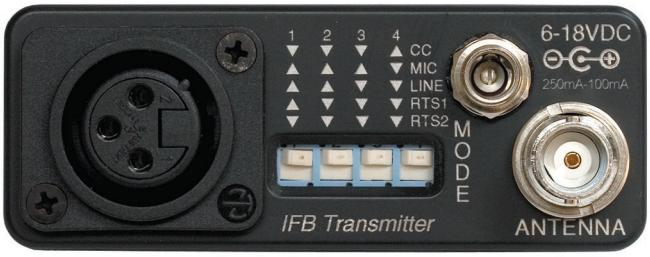

XLR Jack

A standard XLR female jack accepts a variety of input sources depending on the setting of the rear panel MODE switches. XLR pin functions can be changed to suit the source depending on the positions of the individual switches. For detailed information on the setting of these switches see the **Installation and Operation** section.

Power Input Connector

The IFBT4 is designed to be used with the CH20 external (or equivalent) power source. The nominal voltage to operate the unit is 12 VDC, although it will operate at voltages as low as 6 VDC and as high as 18 VDC. External power sources must be able to supply 200 mA continuously.

The connector dimensions are shown below. Lectrosonics P/N 21425 has a straight back shell. P/N 21586 has a locking collar.

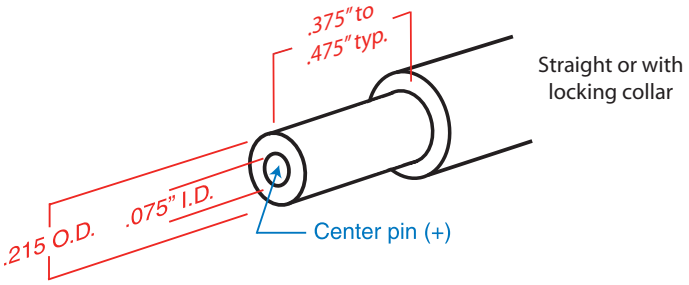

Antenna

The ANTENNA connector is a standard 50 ohm BNC type for use with standard coaxial cabling and remote antennas.

Input Configuration (Mode Switches)

The MODE switches allow the IFBT4 to accommodate a variety of input source levels by changing the input sensitivity and the pin functions of the input XLR jack. Marked on the rear panel are the most common settings. Each setting is detailed below. Switches 1 and 2 adjust the XLR pin functions while switches 3 and 4 adjust the input sensitivity.

Name	Switch Positions 1	2	3	4	XLR Pins	Balanced	Input Sensitivity
CC	▼	▼	▼	▲	3 = Audio 1 = Common	No	-10 dBu
MIC	▲	▲	▲	▼	2 = Hi 3 = Lo 1 = Common	Yes	-42 dBu
LINE	▲	▲	▼	▼	2 = Hi 3 = Lo 1 = Common	Yes	0 dBu
RTS1	▲	▼	▼	▼	2 = Hi 1 = Common	No	0 dBu
RTS2	▼	▼	▼	▼	3 = Hi 1 = Common	No	0 dBu

Frequency Selection

The R1A-VHF receiver provides two 16-position rotary switches to select the frequency, adjusted with a small screwdriver inserted in the slot in the middle of the switches. The left-hand switch makes 2.8 MHz steps and the right-hand switch in 175 kHz steps, with the switch positions marked in hexadecimal numerals 0 through F.

Frequencies are designated by two characters, such as B5, where first character is the left-and switch position and the second character the right-hand switch position. Thus, in this example, B5 would indicate 205.775 MHz, as shown in the table below.

The front panel LCD on the IFBT4-VHF transmitter displays frequency in MHz and in the two character hexadecimal method.

Frequency select switches on the IFBR1A-VHF receiver

2.8 MHz steps

175 kHz steps

IFBT4-VHF transmitter LCD

Frequency in hex

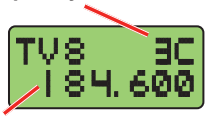

Frequency in MHz

175K SWITCH (RIGHT)

2.8M SWITCH (LEFT)	0	1	2	3	4	5	6	7
0	174.100	174.275	174.450	174.625	174.800	174.975	175.150	175.325
1	176.900	177.075	177.250	177.425	177.600	177.775	177.950	178.125
2	179.700	179.875	180.050	180.225	180.400	180.575	180.750	180.925
3	182.500	182.675	182.850	183.025	183.200	183.375	183.550	183.725
4	185.300	185.475	185.650	185.825	186.000	186.175	186.350	186.525
5	188.100	188.275	188.450	188.625	188.800	188.975	189.150	189.325
6	190.900	191.075	191.250	191.425	191.600	191.775	191.950	192.125
7	193.700	193.875	194.050	194.225	194.400	194.575	194.750	194.925
8	196.500	196.675	196.850	197.025	197.200	197.375	197.550	197.725
9	199.300	199.475	199.650	199.825	200.000	200.175	200.350	200.525
A	202.100	202.275	202.450	202.625	202.800	202.975	203.150	203.325
B	204.900	205.075	205.250	205.425	205.600	205.775	205.950	206.125
C	207.700	207.875	208.050	208.225	208.400	208.575	208.750	208.925
D	210.500	210.675	210.850	211.025	211.200	211.375	211.550	211.725
E	213.300	213.475	213.650	213.825	214.000	214.175	214.350	214.525
F								

175K SWITCH (RIGHT)

2.8M SWITCH (LEFT)	8	9	A	B	C	D	E	F
0	175.500	175.675	175.850	176.025	176.200	176.375	176.550	176.725
1	178.300	178.475	178.650	178.825	179.000	179.175	179.350	179.525
2	181.100	181.275	181.450	181.625	181.800	181.975	182.150	182.325
3	183.900	184.075	184.250	184.425	184.600	184.775	184.950	185.125
4	186.700	186.875	187.050	187.225	187.400	187.575	187.750	187.925
5	189.500	189.675	189.850	190.025	190.200	190.375	190.550	190.725
6	192.300	192.475	192.650	192.825	193.000	193.175	193.350	193.525
7	195.100	195.275	195.450	195.625	195.800	195.975	196.150	196.325
8	197.900	198.075	198.250	198.425	198.600	198.775	198.950	199.125
9	200.700	200.875	201.050	201.225	201.400	201.575	201.750	201.925
A	203.500	203.675	203.850	204.025	204.200	204.375	204.550	204.725
B	206.300	206.475	206.650	206.825	207.000	207.175	207.350	207.525
C	209.100	209.275	209.450	209.625	209.800	209.975	210.150	210.325
D	211.900	212.075	212.250	212.425	212.600	212.775	212.950	213.125
E	214.700	214.875	215.050	215.225	215.400	215.575	215.750	
F								

Installation and Operation

1) The IFBT4 transmitter is shipped with pin 1 of the XLR input connector tied directly to ground. If a floating input is desired, a Ground Lift Jumper is provided. This jumper is located inside the unit on the PC board near the rear panel XLR jack. For floating input, open the unit and move the Ground Lift Jumper to the outermost contacts.

Location of Ground Lift Jumper:

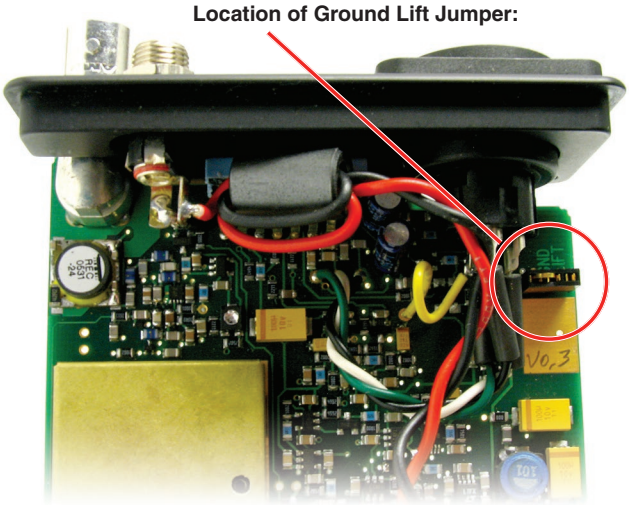

Jumper placed toward PCB as shown connects pin 1 to ground. Move jumper to outside contacts to lift ground.

2) Set the MODE switches on the rear panel to match the specific input source to be used. See Inpout Configuration (Mode Switches).
3) Insert the power supply plug into the 6-18 VDC jack on the rear panel.
4) Insert the microphone or other audio source XLR plug into the input jack. Ensure that the pins are aligned and that the connector locks into place.
5) Attach the antenna (or antenna cable) to the BNC connector on the rear panel.
6) Set the OFF/TUNE/XMIT switch to TUNE.
7) Press the MENU button to display the Frequency Window and adjust the transmitter to the desired frequency with the front panel Up and Down buttons.
8) Position the microphone. The microphone should be placed where it will be located during actual use.
9) Use the MENU button to navigate to the Audio Input Gain Window. While speaking at the same voice level that will be present during actual use, observe the audio meter display. Use the Up and Down buttons to adjust the audio input gain so that the meter reads close to 0 dB, but only rarely exceeds 0 dB (limiting).
10) Once the transmitter audio gain has been set, the receiver and other components of the system can be turned on and their audio levels adjusted. Set the power switch on the IFBT4 transmitter to XMIT and adjust the associated receiver and sound system level as required.

Note: There will be a delay between the moment the transmitter is energized and the actual appearance of audio at the receiver output. This intentional delay eliminates turn-on thumps, and is controlled by the pilot tone squelch system.

Adjust Audio Input Level

The AUDIO LEVEL control adjusts the gain applied to the incoming audio signal. This gain adjustment is used to match the input level to the incoming signal from the sound source to provide full modulation and the maximum signal to noise ratio, not to set the volume of the associated receiver.

If the audio level is too high, compression or distortion may occur. The audio level meter will reach the 0 dB level (full scale) frequently or remain indicating full scale. Input limiting begins when a vertical line appears at the right end of the level indicator.

Input limiting indicator

If the audio level is too low, the audio level meter will continuously indicate a low level. This condition may cause hiss and noise in the audio, or pumping and breathing in the background noise.

Low input level

The input limiter will handle peaks up to 30 dB above full modulation, regardless of the gain control setting. Occasional limiting is often deemed desirable, indicating that the gain is correctly set and the transmitter is fully modulated for optimum signal to noise ratio. Different voices will usually require different audio input gain settings, so check this adjustment as each new person uses the system. If several different people will be using the transmitter and there is not time to make the adjustment for each individual, adjust it for the loudest voice

Accessories

CH20

Power supply for IFB base transmitters with locking LZR power jacks; 110 VAC input, 12 VDC regulated output; 400 mA max.

A170AC

VHF straight whip antenna; right angle BNC connector

ARG15

A 15 foot antenna cable of standard RG-58 coax cable with BNC connectors at each end. Loss of 1 to 2 dB with 0.25” diameter.

ARG25/ARG50/ARG100

An antenna cable of Belden 9913F low-loss coax cable with BNC connectors at each end. Double shielded, flexible, 50 Ohms, with a foamed polyethylene dielectric. Lower loss (1.6 to 2.3 dB) with somewhat less weight than standard RG-8 with the same 0.400” diameter. Available in 25, 50 and 100 foot lengths.

RMP195

4 channel rack mount for up to four IFBT4 transmitters. Rocker switch included to work as a master power switch if desired.

21425

6 ft. long power cord; coaxial to stripped & tinned leads. Coaxial plug: ID-.080”; OD-.218”; Depth- .5”. Fits all compact receiver models that use CH12 power supply.

21472

6 ft. long power cord; coaxial to stripped & tinned leads. Right angle coaxial plug: ID-.075”; OD-.218”; Depth- .375”. Fits all compact receiver models that use CH12 power supply.

21586

DC16A Pigtail power cable, LZR stripped & tinned.

CH20

ARG15
ARG25
ARG50
ARG100

CH20 power supply

21425

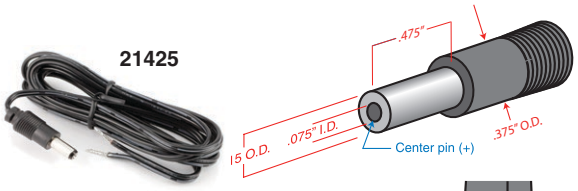

21472

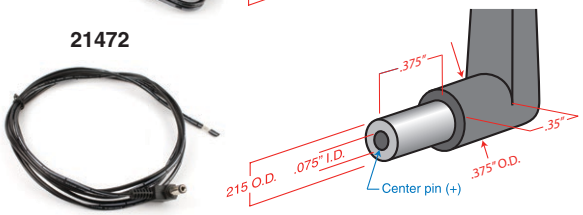

21586

Troubleshooting

NOTE: Always ensure that the COMPAT (compatibility) setting is the same on both transmitter and receiver. A variety of different symptoms will occur if the settings do not match.

Symptom:	Possible Cause:
Display Dead	1) External power supply disconnected or inadequate. 2) The External DC power input is protected by an auto-reset polyfuse. Disconnect power and wait about 1 minute for the fuse to reset.
No Transmitter Modulation	1) Audio input gain setting turned all the way down. 2) Sound source off or malfunctioning. 3) Input cable damaged or mis-wired.
No Received Signal	1) Transmitter not turned on. 2) Receiver antenna missing or improperly positioned. (The IFBR1/IFBR1a headset cable is the antenna.) 3) Transmitter and receiver not on same frequency. Check on transmitter and receiver. 4) Operating range is too great. 5) Transmitter antenna not connected. 6) Transmitter switch in the TUNE position. Switch to XMIT mode.
No Sound (or Low Sound Level), and Receiver is powered on.	1) Receiver output level set too low. 2) Receiver earphone cable is defective or mis-wired. 3) Sound system or transmitter input is turned down.
Distorted Sound	1) Transmitter gain (audio level) is far too high. Check audio level meter on transmitter as it is being used. (Refer to Installation & Operation section for details on gain adjustment.) 2) Receiver output may be mismatched with the headset or earphone. Adjust output level on receiver to the correct level for the headset or earphone. 3) Excessive wind noise or breath “pops.” Reposition microphone and/or use a larger windscreen.
Hiss, Noise, or Audible Dropouts	1) Transmitter gain (audio level) far too low. 2) Receiver antenna missing or obstructed. (The IFBR1/IFBR1a headset cable is the antenna.) 3) Transmitter antenna missing or mismatched. Check that the correct antenna is being used. 4) Operating range too great. 5) Defective remote antenna or cable.
Antenna Icon (in Main Window) or Hex Code (in Frequency Window) Blinking	1) PLL is unlocked. Retune transmitter. Factory service may be required if problem persists.

Specifications

Operating Frequencies (MHz):	174.100 to 215.750 MHz
Available Frequencies:	239
Channel Spacing:	175 kHz
RF Power Output:	50 mW
Frequency Stability:	±.001% (10 ppm) @ 25° C
Temperature Stability:	±.001% (10 ppm) from -30° C to +50° C
Channel Selection:	Momentary pushbutton switches, tune Up and Down
Compatibility Modes (2)	IFB and Digital Hybrid Wireless® (400 Series)
Pilot Tone:	29.997 kHz IFB & 400 MODE; each frequency has a unique pilot tone
Modulation:	• IFB Mode: FM, ±20 kHz deviation • Digital Hybrid Mode: ±75kHz
Audio Frequency Response:	• IFB Mode: 100 Hz to 8 kHz, ±1 dB • Digital Hybrid Mode: 30Hz to 20kHz ±1dB response (see Rolloff)
Rolloff:	Low frequency audio rolloff is menu selectable for 3 dB down at 35 Hz or 50 Hz.
Audio Compressor:	2 to 1 (IFB mode)
Input Limiter Range:	30 dB
Output Impedance:	50 ohms
Audio Input Levels:	• 0 dBu for Line, RTS1 & RTS2 • -10 dBu for Clear Com • -42 dBu for mic dry inputs (no phantom power) • +/-50Vdc max
Audio Input Config:	Balanced and Unbalanced, rear panel selectable for Line, Mic. RTS 1, RTS 2, and Clear Comm
Audio Input Impedance:	Greater than 2 K balanced, greater than 1 K unbalanced at any gain setting
Gain Control Range:	-18 dB to +24 dB (0 dB nominal center), Menu selectable
Audio Input Jack:	Standard XLR female connector
Power Requirements:	12 to 14 VDC typical, 200 ma. max.; Max. Input Range 6 to 18 VDC
Power Input Jack:	Coax type, locking LZR RL26AE
Indicators:	Backlit Liquid Crystal Display. Displays modulation meter, frequencies, modes, roll-off and audio level
Front panel controls:	• MENU momentary pushbutton switch • Power OFF-TUNE-XMIT, 3 position slide switch • Select Up momentary pushbutton switch • Select down momentary pushbutton switch
Rear panel controls:	Input Mode Select, 4 section DIP switch
Weight:	9 ozs.
Size: 5.25" L (including connectors) x 3.25" W x 1.25" H	
Emission designator:	180KF3E

Specifications subject to change without notice.

FCC Notices:

This device complies with part 15 of the FCC rules. Operation is subject to the following two conditions: (1) this device may not cause harmful interference, and (2) this device must accept any interference received, including interference that may cause undesired operation.

This equipment complies with the FCC RF radiation exposure limits set forth for an uncontrolled environment. This equipment should be installed and operated with a minimum distance of 20cm between the radiator and any part of your body.

This device complies with Industry Canada's license-exempt RSSs. Operation is subject to the following two conditions:

(1) This device may not cause interference; and

(2) This device must accept any interference, including interference that may cause undesired operation of the device.

Le présent appareil est conforme aux CNR d'Industrie Canada applicables aux appareils radio exempts de licence. L'exploitation est autorisée aux deux conditions suivantes:

(1) l'appareil ne doit pas produire de brouillage, et

(2) l'utilisateur de l'appareil doit accepter tout brouillage radioélectrique subi, même si le brouillage est susceptible d'en compromettre le fonctionnement.

This equipment complies with the IC RF radiation exposure limits set forth for an uncontrolled environment. This equipment should be installed and operated with a minimum distance of 20 cm between the radiator and any part of your body.

Service and Repair

If your system malfunctions, you should attempt to correct or isolate the trouble before concluding that the equipment needs repair. Make sure you have followed the setup procedure and operating instructions. Check the interconnecting cables and then go through the **Troubleshooting** section in this manual.

We strongly recommend that you **do not** try to repair the equipment yourself and **do not** have the local repair shop attempt anything other than the simplest repair. If the repair is more complicated than a broken wire or loose connection, send the unit to the factory for repair and service. Don't attempt to adjust any controls inside the units. Once set at the factory, the various controls and trimmers do not drift with age or vibration and never require readjustment. **There are no adjustments inside that will make a malfunctioning unit start working**.

LECTROSONICS' Service Department is equipped and staffed to quickly repair your equipment. In warranty repairs are made at no charge in accordance with the terms of the warranty. Out-of-warranty repairs are charged at a modest flat rate plus parts and shipping. Since it takes almost as much time and effort to determine what is wrong as it does to make the repair, there is a charge for an exact quotation. We will be happy to quote approximate charges by phone for out-of-warranty repairs.

Returning Units for Repair

For timely service, please follow the steps below:

A. DO NOT return equipment to the factory for repair without first contacting us by email or by phone. We need to know the nature of the problem, the model number and the serial number of the equipment. We also need a phone number where you can be reached 8 A.M. to 4 P.M. (U.S. Mountain Standard Time).

B. After receiving your request, we will issue you a return authorization number (R.A.). This number will help speed your repair through our receiving and repair departments. The return authorization number must be clearly shown on the **outside** of the shipping container.

C. Pack the equipment carefully and ship to us, shipping costs prepaid. If necessary, we can provide you with the proper packing materials. UPS is usually the best way to ship the units. Heavy units should be "double-boxed" for safe transport.

D. We also strongly recommend that you insure the equipment, since we cannot be responsible for loss of or damage to equipment that you ship. Of course, we insure the equipment when we ship it back to you.

Lectrosonics USA:

Mailing address:
Lectrosonics, Inc.
PO Box 15900
Rio Rancho, NM 87174
USA

Shipping address:
Lectrosonics, Inc.
581 Laser Rd.
Rio Rancho, NM 87124
USA

Telephone:
(505) 892-4501
(800) 821-1121 Toll-free
(505) 892-6243 Fax

Web:
www.lectrosonics.com

E-mail:
sales@lectrosonics.com

Lectrosonics Canada:

Mailing Address:
49 Spadina Avenue,
Suite 303A
Toronto, Ontario M5V 2J1

Telephone:
(416) 596-2202
(877) 753-2876 Toll-free
(877-7LECTRO)
(416) 596-6648 Fax

E-mail:
Sales: colinb@lectrosonics.com
Service: joeb@lectrosonics.com

LIMITED ONE YEAR WARRANTY

The equipment is warranted for one year from date of purchase against defects in materials or workmanship provided it was purchased from an authorized dealer. This warranty does not cover equipment which has been abused or damaged by careless handling or shipping. This warranty does not apply to used or demonstrator equipment.

Should any defect develop, Lectrosonics, Inc. will, at our option, repair or replace any defective parts without charge for either parts or labor. If Lectrosonics, Inc. cannot correct the defect in your equipment, it will be replaced at no charge with a similar new item. Lectrosonics, Inc. will pay for the cost of returning your equipment to you.

This warranty applies only to items returned to Lectrosonics, Inc. or an authorized dealer, shipping costs prepaid, within one year from the date of purchase.

This Limited Warranty is governed by the laws of the State of New Mexico. It states the entire liablility of Lectrosonics Inc. and the entire remedy of the purchaser for any breach of warranty as outlined above. NEITHER LECTROSONICS, INC. NOR ANYONE INVOLVED IN THE PRODUCTION OR DELIVERY OF THE EQUIPMENT SHALL BE LIABLE FOR ANY INDIRECT, SPECIAL, PUNITIVE, CONSEQUENTIAL, OR INCIDENTAL DAMAGES ARISING OUT OF THE USE OR INABILITY TO USE THIS EQUIPMENT EVEN IF LECTROSONICS, INC. HAS BEEN ADVISED OF THE POSSIBILITY OF SUCH DAMAGES. IN NO EVENT SHALL THE LIABILITY OF LECTROSONICS, INC. EXCEED THE PURCHASE PRICE OF ANY DEFECTIVE EQUIPMENT.

This warranty gives you specific legal rights. You may have additional legal rights which vary from state to state.

LECTROSONICS®
581 Laser Road NE • Rio Rancho, NM 87124 USA • www.lectrosonics.com
+1(505) 892-4501 • fax +1(505) 892-6243 • (800) 821-1121 US and Canada • sales@lectrosonics.com

20 October 2015