No.59-3045-0

Installation Instructions

Vehicle Detection Sensor

ViiK

Exposed Type OVS-02GT Series
Embedded Type OVS-02B Series

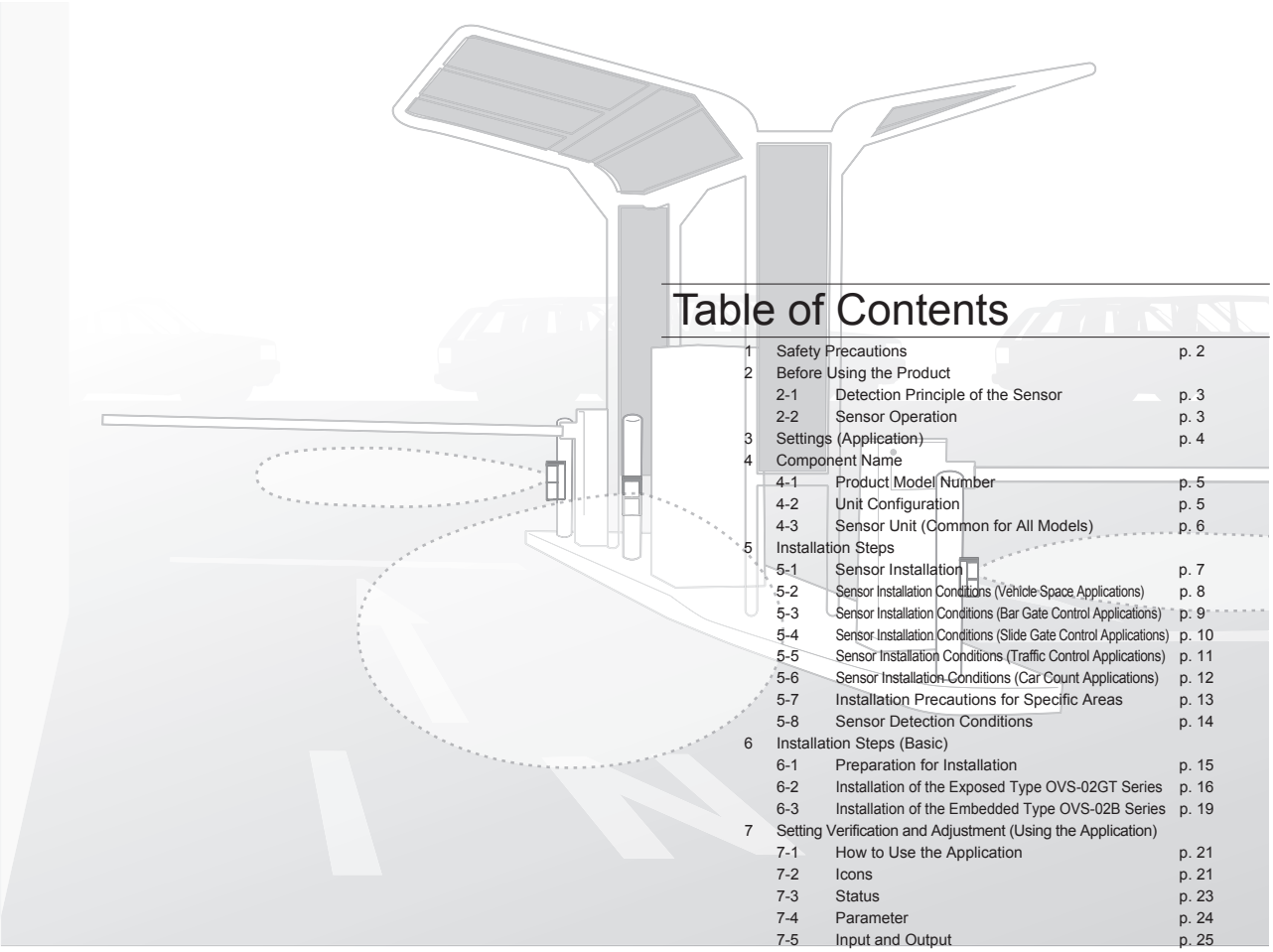

Table of Contents

1 Safety Precautions p. 2
2 Before Using the Product
2-1 Detection Principle of the Sensor p. 3
2-2 Sensor Operation p. 3
3 Settings (Application) p. 4
4 Component Name
4-1 Product Model Number p. 5
4-2 Unit Configuration p. 5
4-3 Sensor Unit (Common for All Models) p. 6
5 Installation Steps
5-1 Sensor Installation p. 7
5-2 Sensor Installation Conditions (Vehicle Space Applications) p. 8
5-3 Sensor Installation Conditions (Bar Gate Control Applications) p. 9
5-4 Sensor Installation Conditions (Slide Gate Control Applications) p. 10
5-5 Sensor Installation Conditions (Traffic Control Applications) p. 11
5-6 Sensor Installation Conditions (Car Count Applications) p. 12
5-7 Installation Precautions for Specific Areas p. 13
5-8 Sensor Detection Conditions p. 14
6 Installation Steps (Basic)
6-1 Preparation for Installation p. 15
6-2 Installation of the Exposed Type OVS-02GT Series p. 16
6-3 Installation of the Embedded Type OVS-02B Series p. 19
7 Setting Verification and Adjustment (Using the Application)
7-1 How to Use the Application p. 21
7-2 Icons p. 21
7-3 Status p. 23
7-4 Parameter p. 24
7-5 Input and Output p. 25
7-6 Info p. 26
8 Preparation before Operation
8-1 Selecting an Application p. 27
8-2 Main Parameters p. 27
8-3 Calibration p. 28
8-4 Detection Area Check p. 29
8-5 Other Functions p. 32
9 Advanced Installation (Applied)
9-1 Angle p. 33
9-2 Detection Area Range (Max. Range) p. 33
9-3 Detection Sensitivity p. 33
9-4 Non-detection Sensitivity p. 33
9-5 Sensitivity Boost, Sensitivity Boost Timer p. 34
9-6 Human Cancellation p. 35
9-7 Presence Detection Timer p. 35
10 Input and Output Settings
10-1 Mode p. 36
10-2 Output Types and Pulse Time p. 36
10-3 On-Delay Timer/Off-Delay Timer p. 37
10-4 Input p. 38
11 Troubleshooting p. 39
12 Specifications
12-1 Specifications p. 41
12-2 Detection Area Diagram p. 41
12-3 Dimensions p. 42
12-4 Options p. 43

Features

- Passage and presence of vehicles are detected with a unique algorithm using microwaves (electric waves)
- Settings can be modified with a smartphone application
- Settings can be shared using the application
- Human cancellation function allows for detection of vehicles only
- Easy-to-see operation displays
- Built-in heater equipped as standard to reduce snow build up

1 Safety Precautions

This product is a vehicle detection sensor designed for detecting the entry, presence, and departure of vehicles in the following applications. Do not use the product for other locations or purposes.

- Install the product to the back corner or back center of a vehicle space (parking space) to detect the presence or absence of a vehicle.
- Install the product near a ticketing or fare adjustment machine, or near a gate bar to activate related devices.
- Install the product near a parking exit, mainly to activate traffic control alarms.
- Install the product at the side of a lane to count the number of passing vehicles.

For Safe Use

About the Marks Used in This Document

The description given here explains how to correctly use the product without causing injury to you or other people, or damage to property. The marks used herein and their meanings are as follows. Please be sure that you understand the contents of this section well before reading the rest of the document.

⚠ **WARNING**	Failure to follow the instructions provided with this indication or improper handling may cause death or serious injury.
⚠ **CAUTION**	Failure to follow the instructions provided with this indication or improper handling may cause injury and/or property damage.

Examples of Graphical Indication

	The △ symbol indicates something you need to pay attention to (including warnings). The specific warnings are indicated in the symbol (the figure on the left indicates a danger of electric shock).
	The ⃠ symbol indicates a prohibition. The specific warnings are indicated in or near the symbol (the figure on the left indicates prohibition of disassembly).
	The ● symbol indicates a required action or an item to be observed. The specific instructions are indicated in or near the symbol (the figure on the left indicates that power should be turned off).

⚠ WARNING

Do not touch with wet hands	Do not touch the main unit or the power supply terminal with wet hands. (Do not touch them with hands wet with rain, etc. as well.) Electric shock may occur.
Do not disassemble or modify the unit	NEVER perform disassembly or modification of the unit. Doing so is dangerous. Fire or electric shock may occur.
Turn OFF the system power in case of abnormality	If you use the unit when abnormal conditions are present, such as smoke or an unusual smell, it may cause fire, electric shock, or burns. Immediately turn off the power and contact the contractor.
Use the unit within the scope of its specifications	Use the unit within the scope of the specifications designated by this document. The unit will not work properly or fire or electric shock may occur.
Always turn off the power during installation	Always turn off the unit's power during installation and/or wiring. Electric shock may occur.

⚠ CAUTION

Do not get the unit wet with high-pressure water	Do not get the unit wet with a bucket, hose, or high-pressure washing machine. Water may get in the unit and cause damage.
Connect wires tightly and securely	Follow the steps described in this document for wiring. Fire or electric shock may occur.
Fix tightly	Follow the steps described in this document to attach the unit to a square pole tightly. The unit may fall or its cable may become loose, resulting in injury, fire, or electric shock.
Install and configure the unit properly	Follow the steps described in this document for proper installation, configuration, and operation checking. It may result in a failure of vehicle detection.
Clean the unit regularly	Clean the unit regularly. If you find any abnormality, do not use it.

2 Before Using the Product

2-1 Detection Principle of the Sensor

● Detection Principle
- This sensor uses the reflection of microwave to detect vehicles.
- The microwave sensor uses FMCW technology to detect the presence of a vehicle.

2-2 Sensor Operation

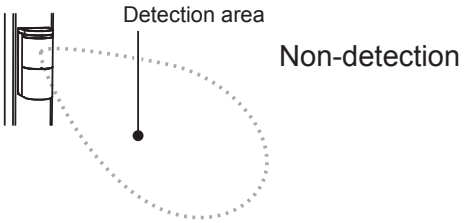

When there is no vehicle within the area, no signal will be output.

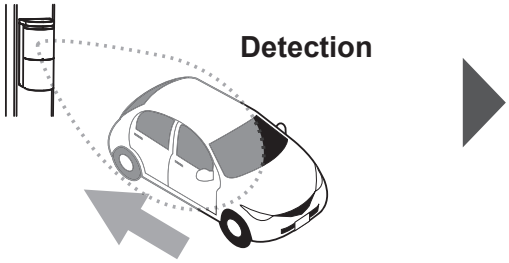

The sensor detects a vehicle when it enters the sensor's detection area.
By setting the on-delay timer, the timing to switch to detection status can be changed.

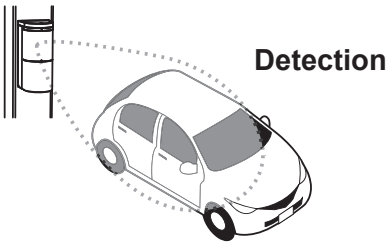

If a vehicle is parked in the detection area, the sensor will maintain detection status.

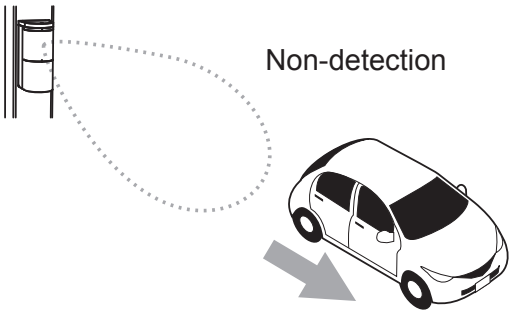

When the vehicle leaves the detection area, the sensor will change to non-detection status.
By setting the off-delay timer, the timing to switch to non-detection status can be changed.

NOTE Differences due to vehicle movement

The direction that a vehicle is moving with regards to the sensor affects the detection capability.
Refer to "Sensor Installation Conditions" (pp. 8–12), and install it correctly.
Parameters must be adjusted depending on the installation angle, so make sure to install it correctly.
It may be difficult to detect a vehicle that suddenly enters the detection area from a blind angle.

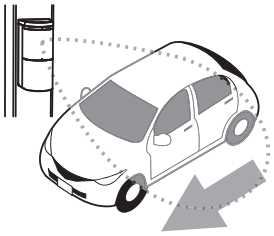

⚠CAUTION

* The following situations may occur due to the sensor detection principles.
- If a pedestrian or an object is in the detection area after a vehicle leaves the area, the sensor will maintain the detection status. The sensor may not change to (or have less of a tendency to change to) non-detection status due to flags, banners, tall weeds, etc.
- If one vehicle tailgates another vehicle very closely when entering the detection area, they may be recognized as a single vehicle.

3 Settings (Application)

The OVS-02 series can be set using a smartphone. (It cannot be set by a device other than a smartphone.)
* The dedicated application is free of charge, but telecommunication cost may be incurred during download.

Before Using the Application

Before using the application, the following contents should be fully understood.
Be sure to read the terms and conditions and the privacy policy regarding the use of the application, which are indicated in the application.
The application will use the location information, Bluetooth, and camera functions of the smartphone. Please allow use of these features.

1 Log in to the application

After starting the application for the first time and consenting to the terms and conditions, the screen to set an application user will appear.
Entry is optional. After you input a user, the “Sensor list” screen will appear.
You can edit the entered information at any time.
After updating the sensor settings, the user will be displayed as an administrator within that application.

2 Log in to the sensor

When logging into a sensor for the first time, set a login password on the sensor while referring to the cautions below.
Manage passwords carefully to avoid breaches and loss.
Passwords can be changed.
If a password is lost, long press (5 seconds or more) the product’s reset switch to reset it to the factory settings.

3 Share Favorites

- When Not Connected to the Sensor
  From the ☆ icon on the “Sensor list” screen, saved Favorites can be shared.
- When Sharing the Settings of the Sensor Being Set
  Settings can be shared from the QR Code icon on the “Parameter list” screen.

4 Receive shared Favorites

You can read the QR code from the QR Code icon on the “Application and Favorite setting” screen.
To read a QR code image that has been saved onto a smartphone, select the Folder icon.

⚠CAUTION

* When setting a password, refer to the following points, and determine a password that will not be easily guessed by others.
- A string from the sensor ID (as is, reversed, repeated, etc.)
- Passwords that can be guessed from the installation site or the company name (e.g. post code, address, telephone number, company name, etc.)
- Consisting entirely of the same number or letter.
- Simple numerical or alphabetical sequences (e.g. 123456)
- A word from a dictionary

4 Component Name

4-1 Product Model Number

The product model number denotes the product configuration as follows. For details, refer to “12-1 Specifications” (p. 41).

OVS-02 Shape Output

- Output
  - None: Non-voltage output + non-voltage output
  - RS: Non-voltage output + RS485
- Shape
  - GT: Exposed type
  - B: Embedded type

4-2 Unit Configuration

● Exposed Type OVS-02GT Series

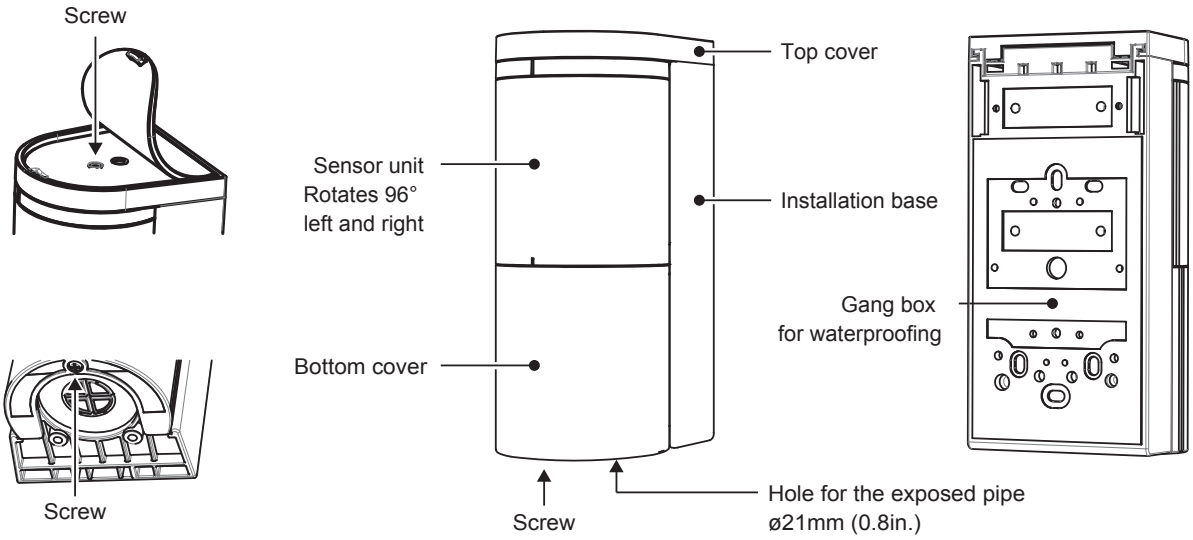

● Embedded Type OVS-02B Series

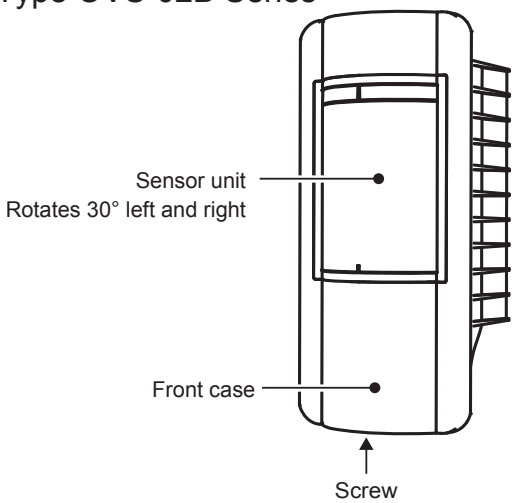

NOTE Maintenance

When the unit body gets dirty, wipe lightly with a damp soft brush or cloth.
If the dirt does not come off, wipe with a cloth that has been dampened with a neutral detergent and wrung out.

- Do not use chemicals such as alcohol.
- Do not wash with a high-pressure washing machine.

4-3 Sensor Unit (Common for All Models)

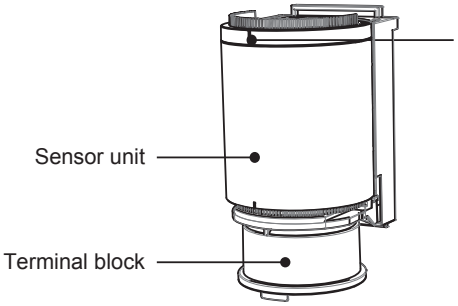

This can be turned ON/OFF, but stays ON during power on and when connected with a smartphone.

● How to Toggle between ON and OFF

- From the “Input and output” screen of the smartphone application
- Hold a magnet close (only when not connected to a smartphone)

● Operation Indicator

Operation Mode	Status	Indicator	Remark
Standard Operation	Starting up	Solid cyan (3 seconds)	
	Standby	Solid green	
	Detected	Solid red	
	Unsuitable environment	Blinking green (slow)	
	BLE connection	Solid blue	Check the detection status on the application. (When not in area check mode)
Area Check Mode	Non-detection	Blinking blue	If it continues blinking in blue (non-detection status) for 30 seconds, it will automatically change back to normal operation mode.
	Pre-detection	Blinking yellow	
	Detection	Blinking red	
Calibration	During calibration	Blinking purple	When an error occurs, it blinks in red and blue alternately.
Reset to Factory Settings	Completed	Solid yellow (2 seconds)	Hold the button for 5 seconds or longer to reset.

● Terminal Block

Connect the power supply to the power supply terminals, and relay output cables to the output terminals. When linking to other devices which has billing information outputs or when billing information is input to the sensor from a connected billing machine, connect the other device to the input terminals.
For models not equipped with RS485, pay careful attention to output differences, and select output 1 or 2 according to the application.

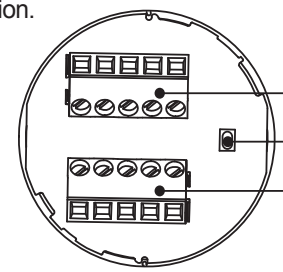

Applicable wire
Solid wire: 0.5–1.2mm (0.02–0.05in.)
(CPEV equivalent)
Stranded wire: 0.3–2.0sq

1 Non-RS models

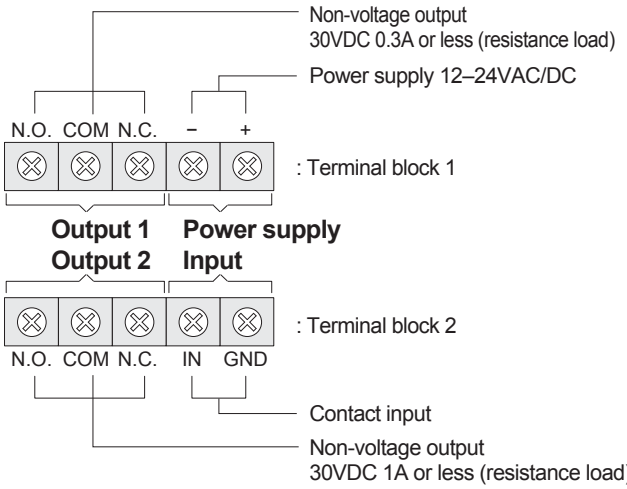

2 RS models

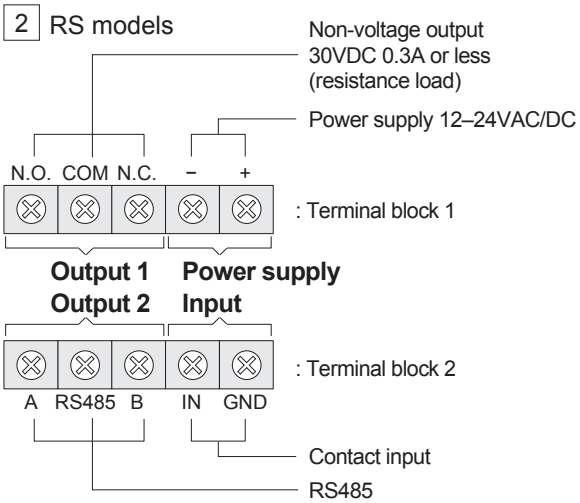

NOTE What is a billing information input?

This is a terminal to connect to a billing machine, which can output signals from start through completion of billing. By linking to a billing machine, detection stability can be improved.

5 Installation Steps

5-1 Sensor Installation

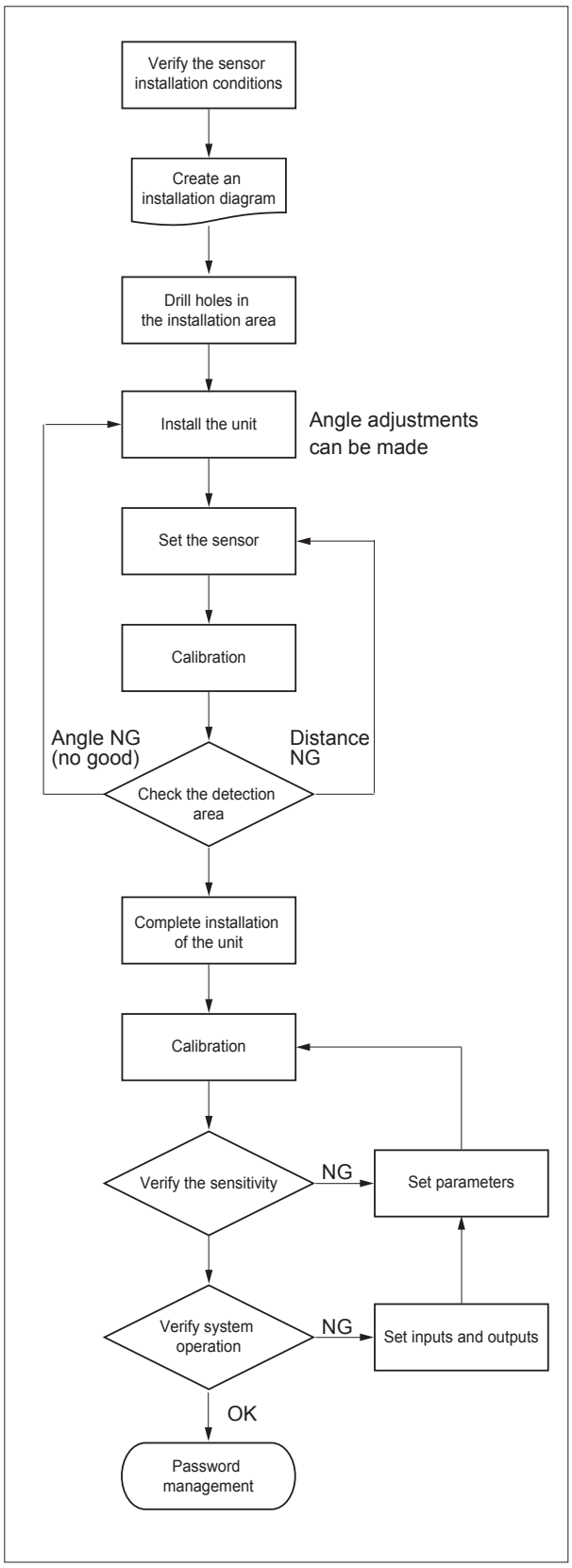

Vehicle Space	Gate	Traffic Control	Car Count
p. 8	p. 9	p. 10	p. 11
p. 15	p. 15	p. 15	p. 15
Exposed type pp. 16–18 Embedded type pp. 19–20	Exposed type pp. 16–18 Embedded type pp. 19–20	Exposed type pp. 16–18 Embedded type pp. 19–20	Exposed type pp. 16–18 Embedded type pp. 19–20
Using the smartphone application			
pp. 21–27	pp. 21–27	pp. 21–27	pp. 21–27
p. 28	p. 28	p. 28	p. 28
pp. 29, 30	pp. 29, 31	pp. 29, 31	pp. 29, 31
Exposed type p. 18 Embedded type p. 20	Exposed type p. 18 Embedded type p. 20	Exposed type p. 18 Embedded type p. 20	Exposed type p. 18 Embedded type p. 20
p. 28	p. 28	p. 28	p. 28
p. 30 When NG pp. 27, 33–35	p. 31 When NG pp. 27, 33–35	p. 31 When NG pp. 27, 33–35	p. 31 When NG pp. 27, 33–35
When NG pp. 36–38	When NG pp. 36–38	When NG pp. 36–38	When NG pp. 36–38

5-2 Sensor Installation Conditions (Vehicle Space Applications)

- The size of applicable parking spaces is shown below. The product cannot be used in a vehicle space where any of the following conditions is not satisfied.
  Vehicle space width: 2000–2500mm (79–98in.)
  Vehicle space length: 4000–5000mm (157–197in.)
  Wheel stopper position: 1000–1200mm (39–47in.) from the end of the vehicle space
- When installing the product in the center of a vehicle space, use wheel stopers that are split to the left and right sides, with an opening of 500mm (20in.) or more between the two stoppers.
- Install a pole to hold the sensor in one of the positions shown below. When the installation angle of the pole is different from below, rotate the sensor unit so that its angle matches the angle shown in the figure below. The exposed type is adjustable up to 96 degrees to the left and right in 3 degree increments, and the embedded type is adjustable up to 30 degrees to the left and right in 3 degree increments.

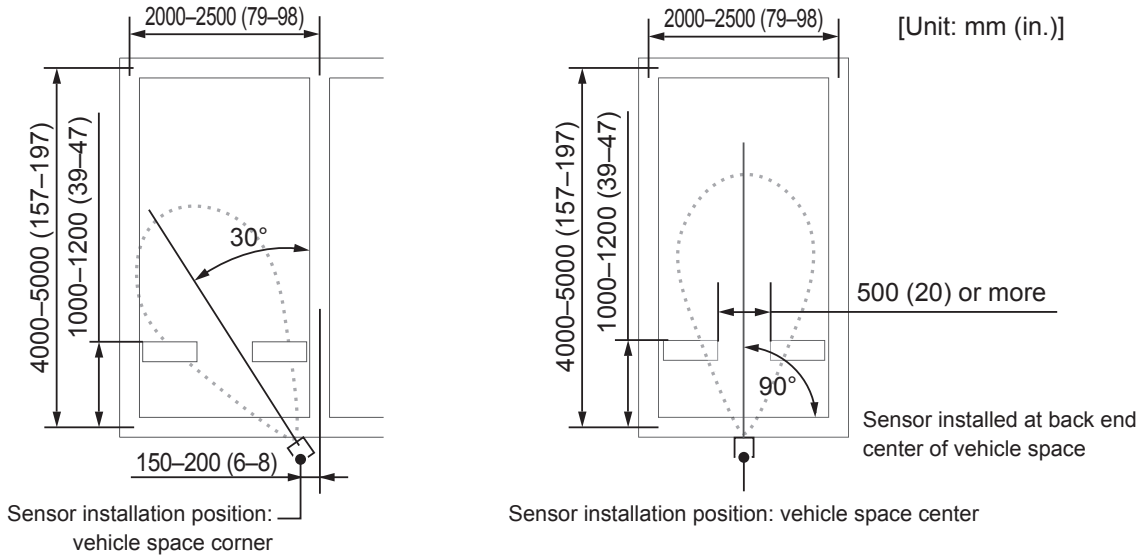

Installation height: The middle of the sensor is 750–800mm (30–31in.) above the ground

- When installing the product in a vehicle space corner, install the pole 150–200mm (6–8in.) in from the center of the borderline to the neighboring vehicle space.

NOTE Wheel stopper

When installing the product in the center of a vehicle space, make sure not to install wheel stoppers in front of the sensor.

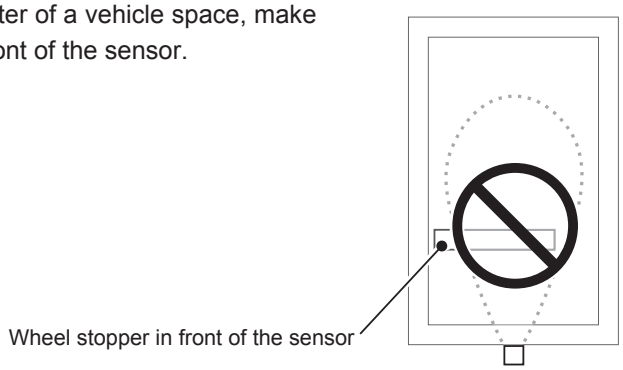

⚠CAUTION

- When installing the product to the corner of a vehicle space, do not install a U-shaped stopper, wall, or fence in the sections colored in gray.
  Do not use a wheel stopper that is 100mm (4in.) or higher.
  Doing so may cause incorrect detection by the sensor.

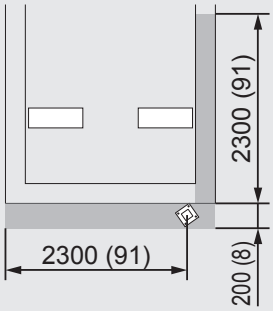

5-3 Sensor Installation Conditions (Bar Gate Control Applications)

There are two patterns of sensor installation conditions for a gate-type parking space. Choose one of the two patterns below, depending on the site conditions. If the installation direction, installation height, or operation type is inappropriate, the sensor will not operate correctly.

* The angle indicated in the figure is the sensor angle when a vehicle enters parallel to the lane. Adjust the sensor angle in accordance with the vehicle's approach angle, not to the lane.

1 Conditions and installation layout for installing two sensors

When the slope of the lane is 5% or less, and locations of signboards, etc., which will be installed in the surrounding area, can be designated in advance.

Installation height: bottom surface of the sensor 500mm (20in.) from the ground

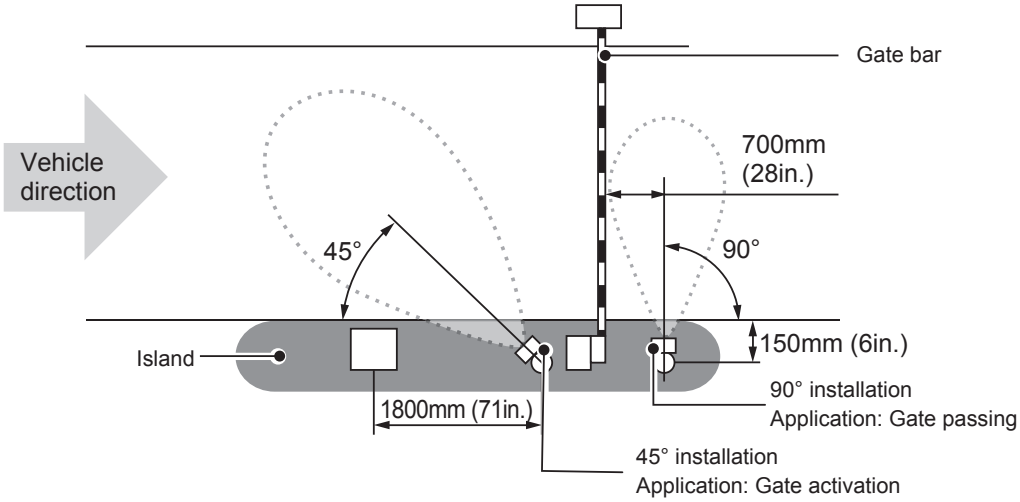

2 Conditions and installation layout for installing three sensors

When the slope of the lane is 5% or more, or when installing an additional sensor to an already existing area
When the locations of signboards, etc., which will be installed in the surrounding area, cannot be designated in advance

Installation height: bottom surface of the sensor 500mm (20in.) from the ground

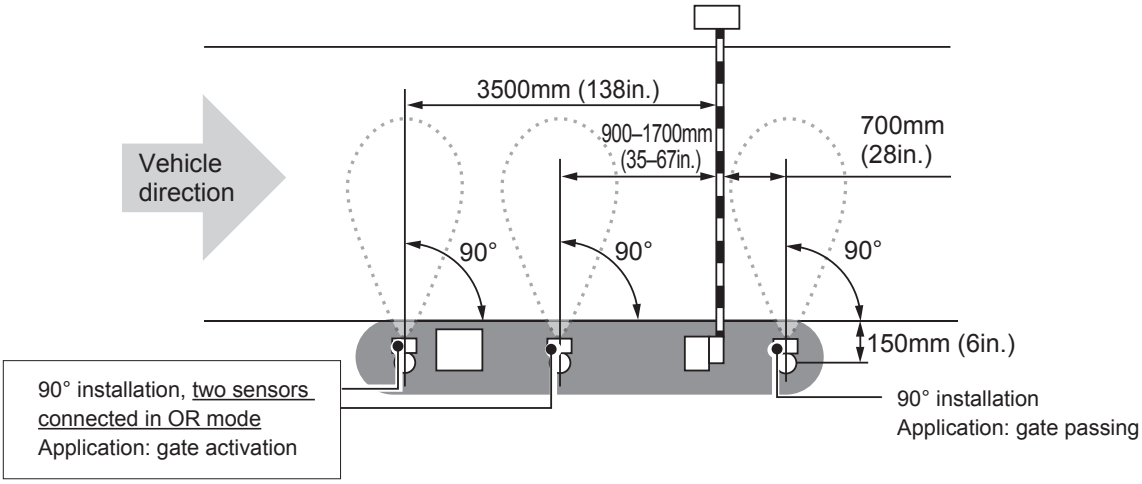

5-4 Sensor Installation Conditions (Slide Gate Control Applications)

Install the sensors with the layout shown below.

When the installation direction or installation height is inappropriate, the sensor does not operate properly.

Installation height: Bottom end of sensor is 500mm (20in.) from the ground

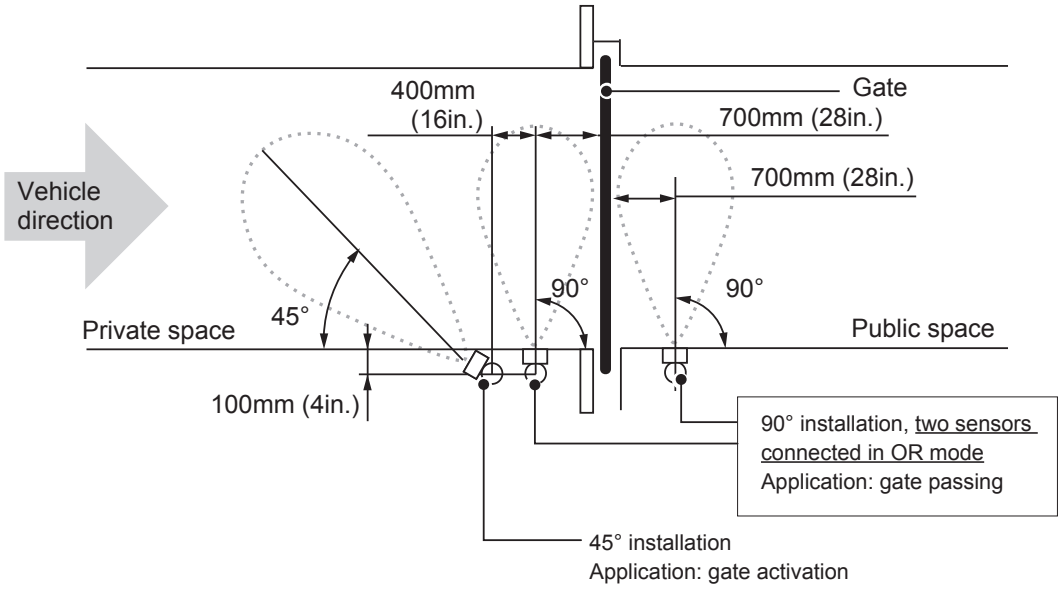

5-5 Sensor Installation Conditions (Traffic Control Applications)

Install the sensors with the layout shown below.
When the installation direction or installation height is inappropriate, the sensor does not operate properly.
Installation height: Bottom end of sensor is 500mm (20in.) from the ground
Installation angle: 45 degrees against the lane direction

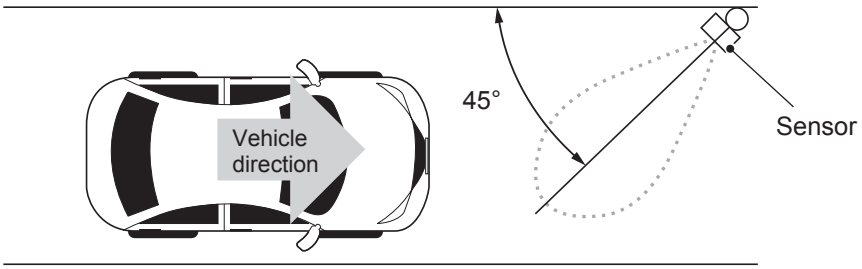

NOTE Two way traffic

1 Avoid detecting cars in the opposite lane

Adjust the detection range so that the detection area will not go over to the opposite lane (refer to “8-2 Main Parameters” (p. 27)). Near the front edge of the detection area, a vehicle in the opposite lane may be detected. Install the sensors to the side of the target vehicle lane.

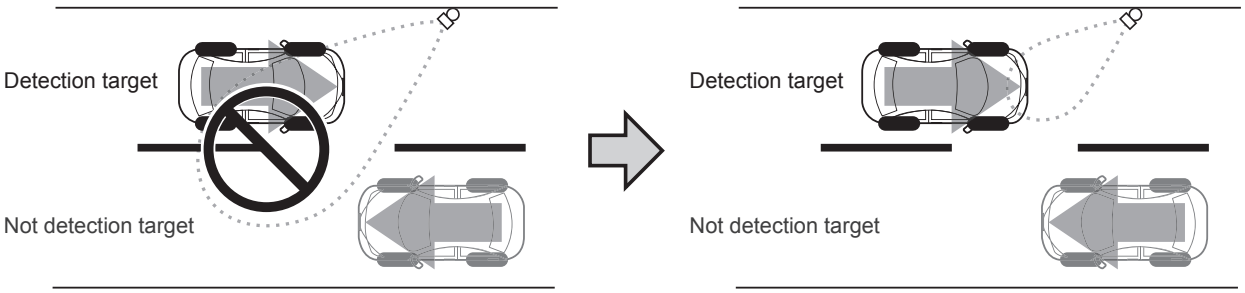

2 Detection cannot be made across to the opposite lane

Install the sensors to the side of the target vehicle lane.

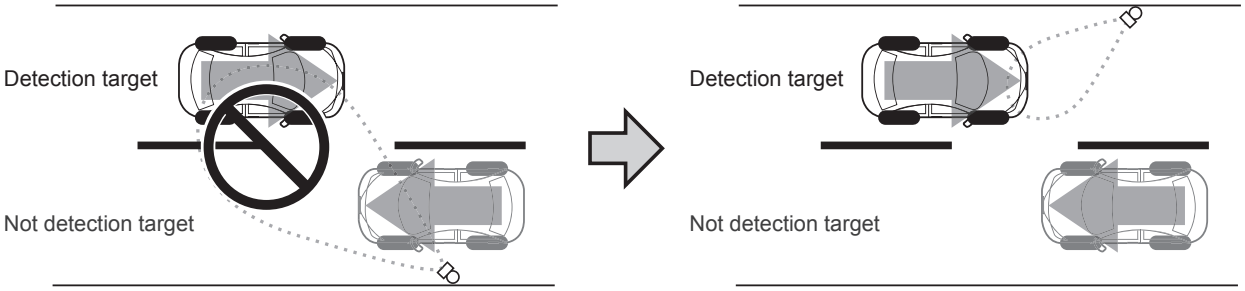

3 Vehicles in both lanes of two-way traffic cannot be detected

To detect vehicles in both lanes, install sensors for each vehicle lane.

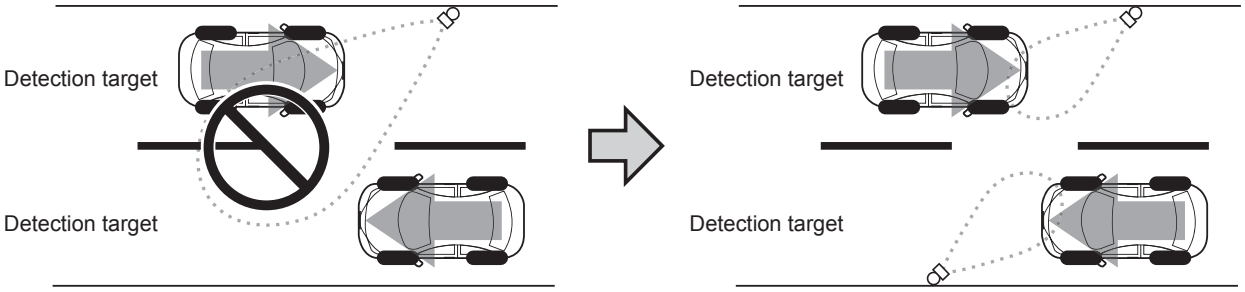

5-6 Sensor Installation Conditions (Car Count Applications)

Install the sensors with the layout shown below. When the installation direction or installation height is inappropriate, the sensor does not operate properly. If one vehicle tailgates another vehicle very closely when entering the detection area, they may be recognized as a single vehicle.

Installation height: bottom surface of the sensor 500mm (20in.) from the ground

Installation angle: perpendicular (90°) to the lane direction

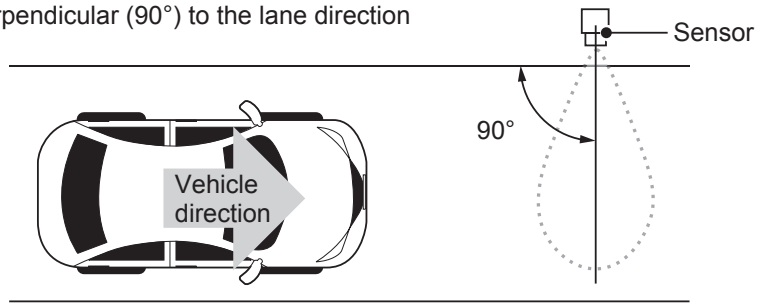

NOTE Two way traffic

1 Avoid detecting cars in the opposite lane

Adjust the detection range so that the detection area will not go over to the opposite lane (refer to “8-2 Main Parameters” (p. 27)). Near the front edge of the detection area, a vehicle in the opposite lane may be detected. Install the sensors to the side of the target vehicle lane.

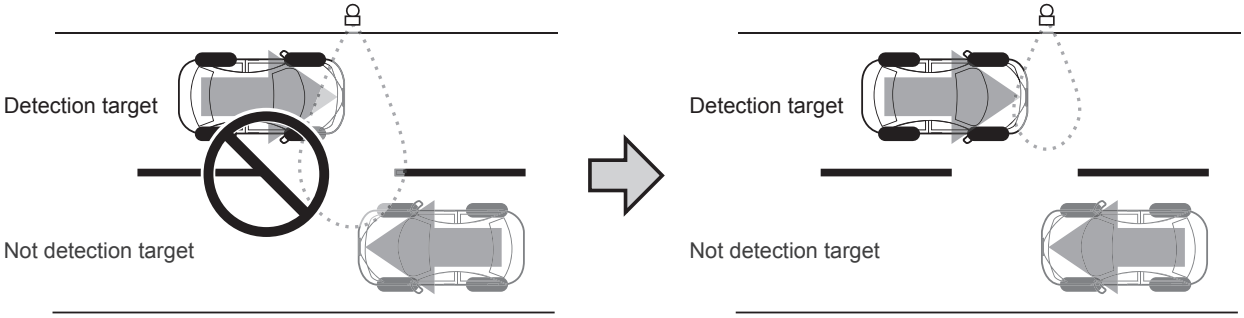

2 Detection cannot be made across to the opposite lane

Install the sensors to the side of the target vehicle lane.

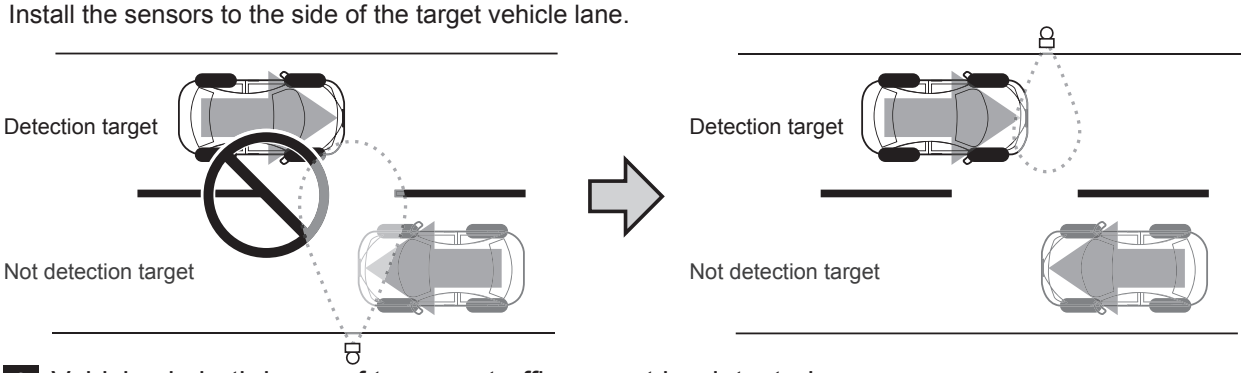

3 Vehicles in both lanes of two-way traffic cannot be detected

To detect vehicles in both lanes, install sensors for each vehicle lane.

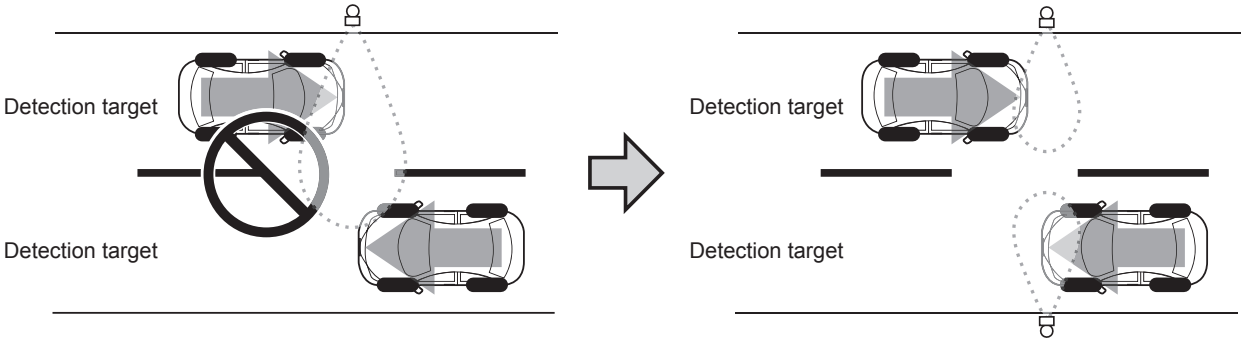

5-7 Installation Precautions for Specific Areas

1 Tilted pole

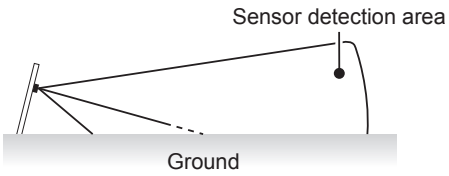

If the sensor is installed on a tilted pole, it will face the ground and not operate properly. Make sure to install the sensor on a pole that is vertical to the ground.

2 Sloping ground

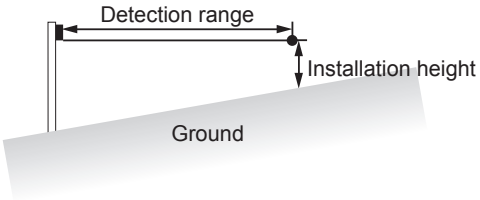

If the pole cannot be installed vertically because of sloping ground, etc., install it in a position such that it is 500mm (20in.) or 750–800mm (30–31in.) above the ground at the set detection range (depending on the application).
However, the detection capability may be reduced as compared to a sensor installed vertically to the ground.

2 Surrounding environment

- There should not be irregularity on the ground in the sensor's detection area such as gratings (refer to "12-2 Detection Area Diagram" (p. 41)). In such a place, the sensor may not go into the non-detection status or may be slow to change to that status.

- Do not install any moving object such as flags or banners in the sensor's detection area. Remove any vegetation from the detection area, or reconfigure the detection area to be smaller. In such a place, the sensor may not go into the non-detection status or may be slow to change to that status.

- Do not use a fluorescent lamp around the detection area. It may prevent proper operation of the sensor.

5-8 Sensor Detection Conditions

• Below are the conditions that vehicles must satisfy to be detected by the sensor.

Vehicle length: 3300mm (130in.) or more,
5000mm (197in.) or less
Vehicle width: 1400mm (55in.) or more,
1900mm (75in.) or less
Vehicle height: 1200mm (47in.) or more,
2100mm (83in.) or less
Minimum ground clearance: 150mm (6in.) or more
Total vehicle weight: 2.5t (5512lb.) or less

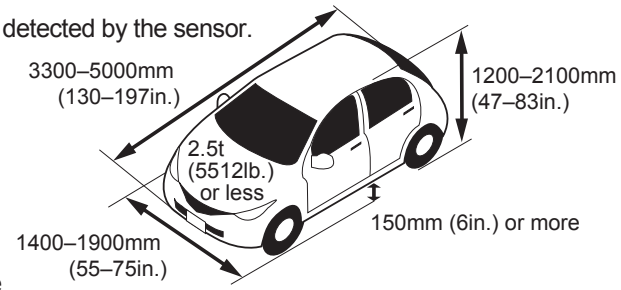

• Vehicles approaching at 2–35km/h (1.2–22mi/h) are detected.

⚠CAUTION

* The following cases may occur due to the sensor's characteristics.

• The sensor may not work properly if it is installed in a location that does not meet the installation conditions.
• The sensor may not work correctly if it is not installed in accordance with the instructions in this manual.
• Pedestrians, bicycles, or any large object (especially metal) entering the detection area may be detected.
• Depending on the position and/or direction of the approaching vehicle, the detection distance may become shorter, or the vehicle may not be detected.
• The sensor may not operate properly in the following cases.
  • The sensor pole is not vertical to the ground
  • The sensor surface is covered with ice, snow, chewing gum, dirt, etc.
  • The sensor unit is frozen
  • Snow has accumulated over a specified height in the sensor's detection area
  • It is raining heavily
  • Water is splashing the sensor

6 Installation Steps (Basic)

6-1 Preparation for Installation

■Required Tools■

• Precision screwdriver, Phillips #1 • Screwdriver, Phillips #2

1 When installing on a round pole

• Secure with pole mounting brackets (sold separately).

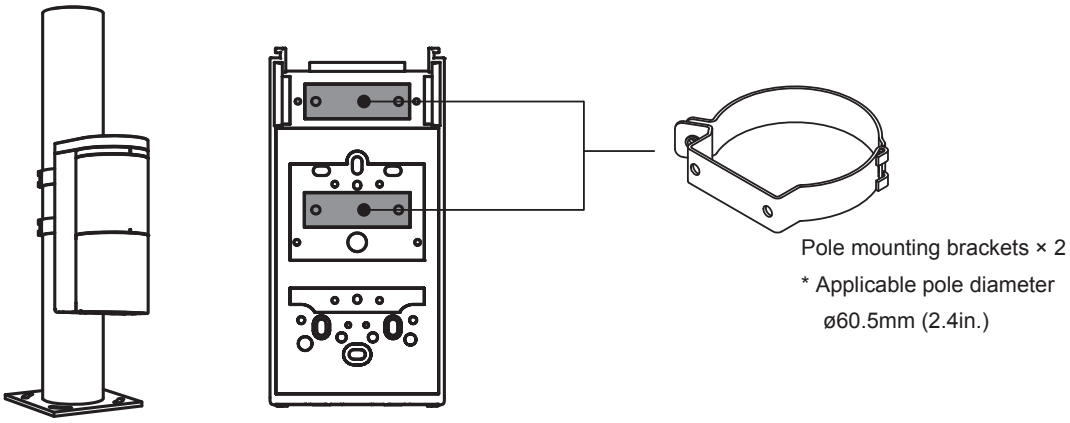

2 When installing on a square pole or a wall

• On a square pole or a wall, drill holes to install the unit as shown below. If tapped holes cannot be made, make pilot holes of ø4.3mm (0.17in.), and secure the unit using nuts. After making holes, deburr the surface to preserve the waterproof property.

• When mounting the unit directly to a wall using tapping screws, consider its effect, and take appropriate actions, such as making pilot holes, according to the target material.
We cannot be held liable for any negative effect on the target material.

● Exposed Type OVS-02GT

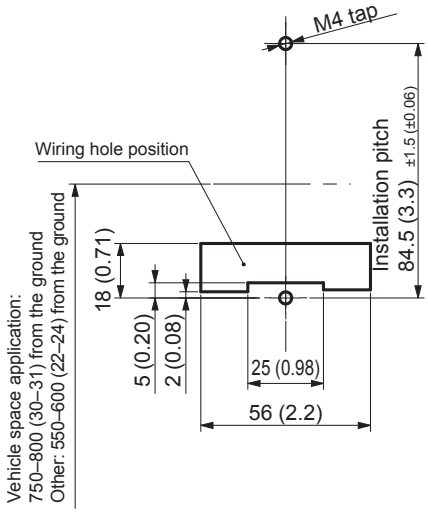

* Wiring holes on the back (other than ø5 (0.20in.) and 6 (0.24in.), two positions on the left and right)

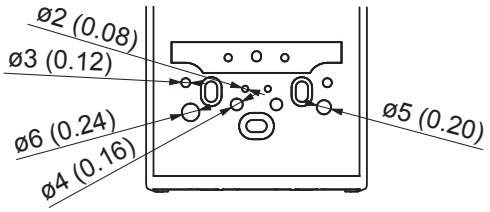

● Embedded Type OVS-02B

[Unit: mm (in.)]

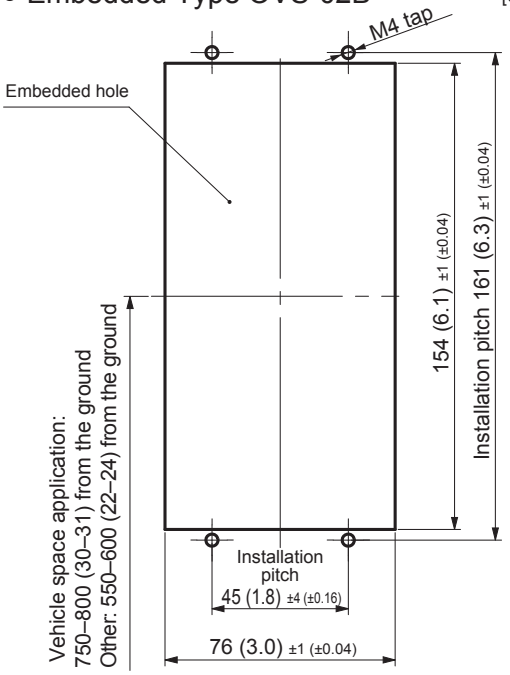

* Caution on installing OVS-02B

• Square poles to install sensors must be 90mm (3.5in.) on each side or larger.

• Waterproof structure is not effective to the pole interior.

6-2 Installation of the Exposed Type OVS-02GT Series

[1] Loosen the screws on the top and bottom covers, and remove the covers.

* Do not loosen the screws completely. The screws may fall out.
If a screw is lost, use an M3 × 6 Philips screw.

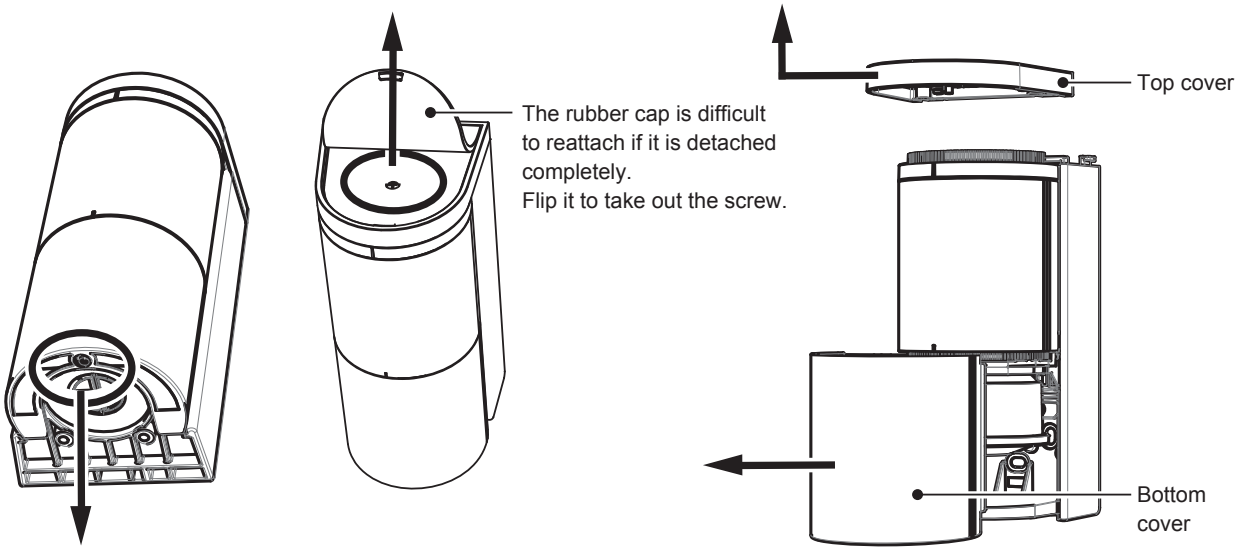

[2] Detach the sensor unit by lifting it.

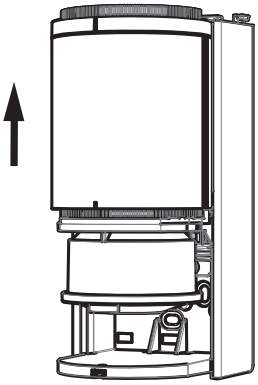

NOTE When using exposed pipes

When wiring on exposed pipes, break the knockout on the bottom of the base, and draw wires.
Use a hard sharp object such as a driver to break the knockout.
If it is difficult to remove the debris, use pliers, etc.

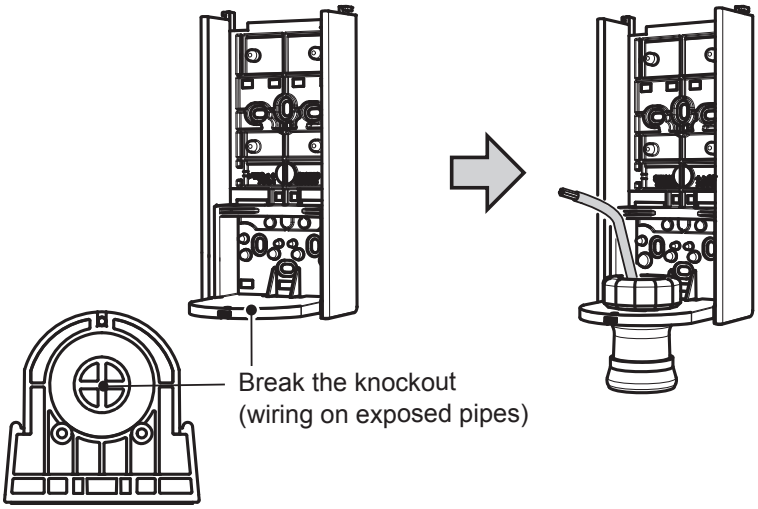

[3] When wiring from a pole, cut the rubber bumps with scissors by referring to the wiring holes on page 15, and put wires through the installation base.
Do not use an electric screwdriver when mounting the unit to a pole.

● Round Pole
Adjust the position so that the front of the base faces the desired angle, and mount it to the pole.

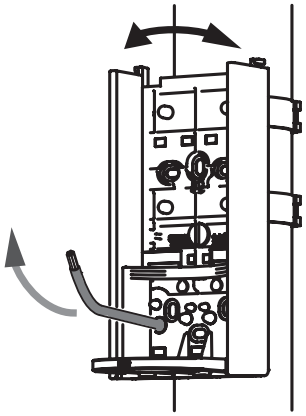

● Square Pole
When pilot holes of ø4.3mm (0.17in.) have been made, use M4 screws (included) and nuts (not included) for mounting.

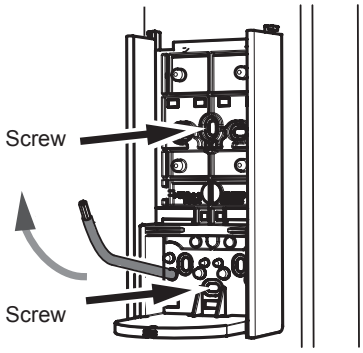

NOTE Adjusting the angle after the base is mounted

Rotate the sensor unit to adjust the angle.
The sensor angle is adjustable up to 96 degrees to the left and right in 3 degree increments.

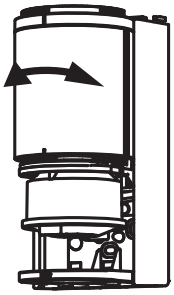

[4] Connect wires to the terminals. Refer to page 6
Connect the power supply to the power supply terminals, and relay output cables to the output terminals.
When linking to other devices or when a connected billing machine has billing information outputs, connect the other device to the input terminals.
Cut the rubber bump with scissors and make a hole according to the wire diameter. (Select the smallest from among similar sizes.)

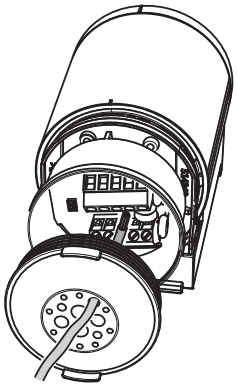

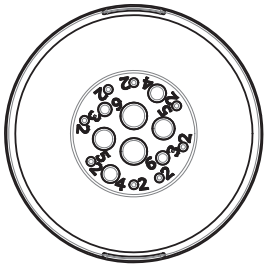

Wiring size: ø2–6mm
(0.08–0.24in.)

Only cut the front end using scissors or nippers.
Doing so will avoid making a hole that is too big.

⚠ CAUTION

- Secure the rubber cap along the edge so that it will not float or sink.

- If a hole with wrong diameter is made
  Apply silicon adhesive and fill the hole. When doing so, be careful not to overfill the adhesive over the hole.
  If the unit is used with holes left open, its waterproof property will be degraded and it may result in breakage.

[5] Install the sensor unit into the base.
At this point, push excess wire out on the pole side.

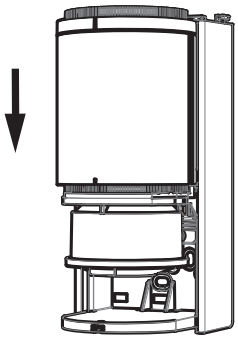

[6] Rotate the sensor unit to adjust its angle to meet the sensor installation condition (adjustable angle: 96° to left and right).

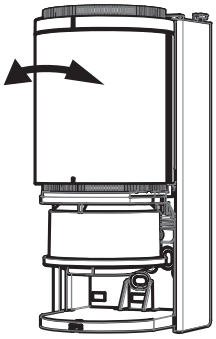

Using the smartphone application

[7] Verify the detection area according to “Selecting an Application” (p. 27) and “Main Parameters” (p. 27) as well as “8-4 Detection Area Check” (p. 29).

[8] Attach the top and bottom covers.

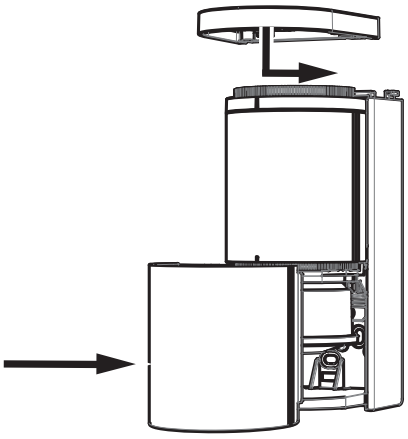

[9] Tighten the screws on the top and bottom covers.
* If a screw is lost, use an M3 × 6 Philips screw.

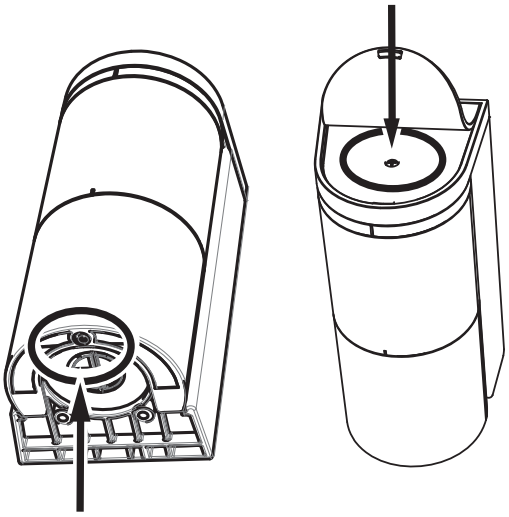

[10] Perform calibration according to “8-3 Calibration” (p. 28).

[11] Verify the system operation according to “8-4 Detection Area Check” (p. 29).

6-3 Installation of the Embedded Type OVS-02B Series

[1] Loosen the retaining screws on the bottom of the front case and remove the front case.
Do not loosen the screw completely. The screw may fall out.
If a screw is lost, use an M3 × 10 Philips screw.

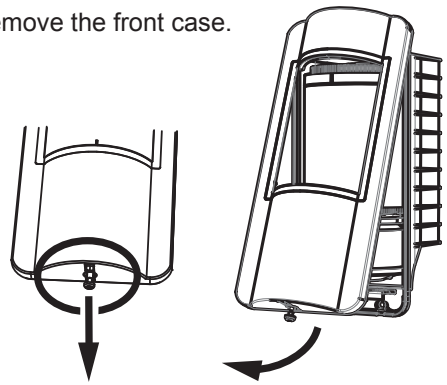

[2] Put wires through the installation holes of a square pole, and draw them into the case.
Enclose the base to the pole.

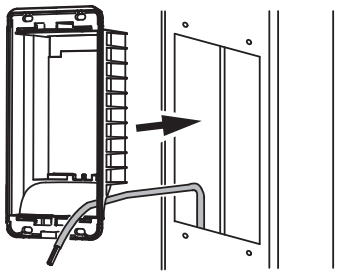

[3] Secure the base using mounting brackets.

[3]-1
Insert the mounting brackets diagonally by hooking them upwards.

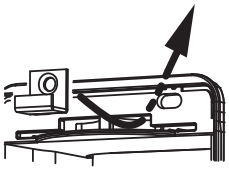

[3]-2
Slide the mounting brackets.

[3]-3
Tuck the sensor into the pole surface and secure it with screws.

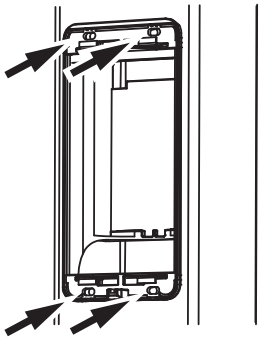

[4] Connect wires to the terminals. Refer to page 6
Connect the power supply to the power supply terminals, and relay output cables to the output terminals.
When linking to other devices or when a connected billing machine has billing information outputs, connect the other device to the input terminals.
Cut the rubber bump with scissors and make a hole according to the wire diameter. (Select the smallest from among similar sizes.)

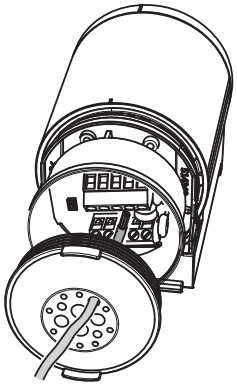

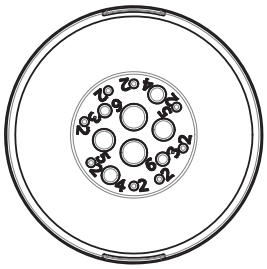

Wiring size: ø2–6mm
(0.08–0.24in.)

Only cut the front end using scissors or nippers.
Doing so will avoid making a hole that is too big.

[5] Install the sensor unit into the base.

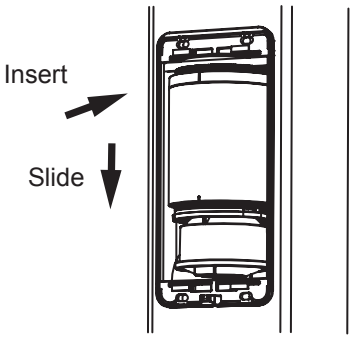

[6] Rotate the sensor unit to adjust its angle to meet the sensor installation condition (adjustable to left and right by up to 30 degrees).

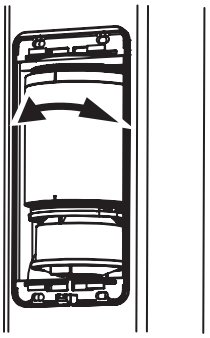

Using the smartphone application

[7] Verify the detection area according to “Selecting an Application” (p. 27) and “Main Parameters” (p. 27) as well as “8-4 Detection Area Check” (p. 29).

[8] Attach the front case.

[8]-1
Align to the tab on the cover top.

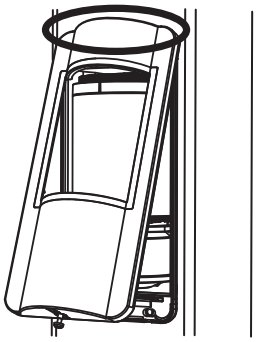

[8]-2
Close the cover.

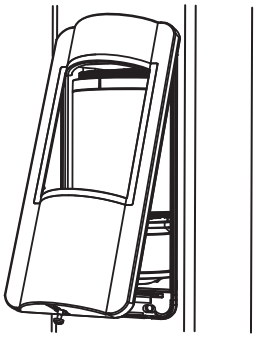

[8]-3
Tighten the screw.

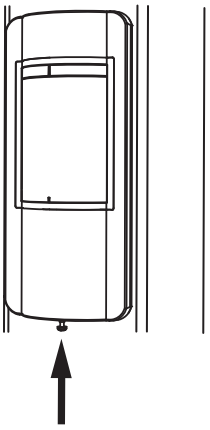

[9] Perform calibration according to “8-3 Calibration” (p. 28).

[10] Verify the system operation according to “8-4 Detection Area Check” (p. 29).

7 Setting Verification and Adjustment (Using the Application)

7-1 How to Use the Application

To start operation, the application must be used.
When using it for the first time, refer to “3 Settings (Application)” (p. 4), and verify and change the setting.

1 Log in to the sensor

Start up the application, and go to Log in using one of the following procedures.
1. Select the target sensor from the list.
2. Press the QR Code icon, and read the QR code on the sensor top.

2 Manage the sensor password

When logging into the sensor for the first time, set a login password for the sensor with reference to the precautions.
Manage passwords carefully to avoid breaches and loss.
If a password is lost, long press (5 seconds or more) the Reset switch, and reset to the factory settings.
The password can then be changed.

7-2 Icons

Below are the icons used in the application.

QR code: This is used to log in to the sensor, or to share Favorites.

Folder: This is used to read a QR code that has been saved onto a smartphone.

Save: This is used to save QR codes and Favorites.

Send: This is used to transmit settings to the sensor.
If a red circle appears on the top right of the icon, make sure to press this.

Status: This is used to verify sensor operation. If a red circle appears on the top right of the icon, make sure to perform the “Send” operation.

Parameter: This is used to set sensor parameters. If a red circle appears on the top right of the icon, make sure to perform the “Send” operation.

Input and output: This is used to set sensor inputs and outputs. If a red circle appears on the top right of the icon, make sure to perform the “Send” operation.

Information: This is used to verify or edit sensor information.

Share: This is used to share Favorites with others.

Add: This is used to add a Favorite.

Delete: This is used to delete Favorites.

Signal strength: This indicates the strength of signals transmitted between the sensor and the smartphone.
If the signal strength is low, approach the sensor and perform setting.

Menu: The items shown below are displayed.

Parameter list: Current settings can be checked.

Favorite: This is used to check Favorites and reflect them to the settings.

Back to previous setting:
This returns changed settings (items displayed in red) to the previous settings.
Once a setting is transmitted to the machine, it cannot be reverted.

Reset to factory settings:
This resets the settings to their factory defaults.
Be cautious when using this, as settings and information will be deleted.

Manual: This displays the instruction manual on the website.
(Telecommunication fees may be incurred.)

Terms and conditions: This displays the terms and conditions.

Privacy policy: This displays the privacy policy on the website.
(Telecommunication fees may be incurred.)

Copyright notice: This displays the copyright notice.

Settings: User information and language can be changed.

Log out: This terminates the connection to the sensor unit.
If any items have not been sent to the sensor, be sure to tap the send button and update the sensor settings before logging out.
After applying the settings, log out and terminate the connection.

7-3 Status

• The sensor status can be verified and set.

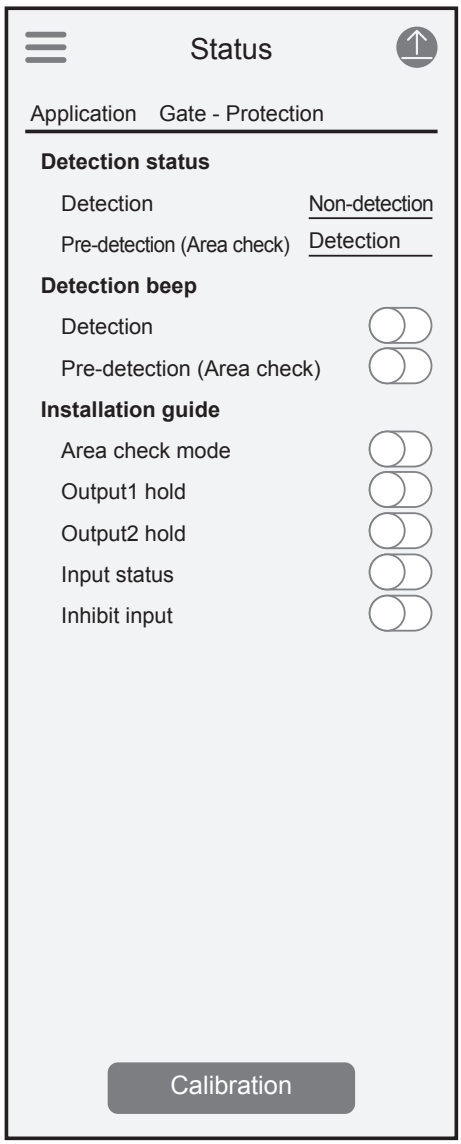

■ Application
Change by tapping Menu icon > Favorite > Select application.

● Detection status

[1] Detection
This indicates the detection status of the sensor.
(Updated approximately once per second.)

[2] Pre-detection (Area check)
This indicates whether the sensor has started a detection response or not.
(Updated approximately once per second.)

● Detection beep

[3] Detection

[4] Pre-detection (Area check)
A beep sound is made when the detection (pre-detection) status changes.

● Installation guide

[5] Area check mode
When this is ON, the sensor detects moving objects such as vehicles and pedestrians. Use this for checking the area. If the operation indicator keeps blinking in blue (non-detection status) for 30 seconds, this will automatically change back to normal operation mode.

[6] Output hold
Outputs from the sensor can continuously be ON. Use this for checking the system operation while outputs are active.

[7] Input status
Inputs can continuously be ON. Use this for checking the system operation while inputs are active.

[8] Inhibit input
The sensor will keep operating without changing its operation even if it receives inputs. Use this for checking the system operation while inputs are not active.

* Installation guide items will be automatically turned OFF when a user logs out from the sensor, or when the connection between the sensor and smartphone is lost.

NOTE Detection and Pre-detection

"Detection" indicates the sensor's detection status. Use this as a check for actual operation. "Pre-detection" indicates if the sensor has captured an object. If "Detection" is indicated in "Pre-detection" even when it is not a time for a detection response, the orientation or settings of the sensor may be incorrect, or the peripheral environment may be causing incorrect detection.

⚠CAUTION

• After changing settings, be sure to tap the Send icon to send the settings to the sensor.

Calibration

• If the operation is unstable, perform this only when an incorrect detection or detection oversight is observed.
• Be sure to perform this action when there are no vehicles or pedestrians in the area.

7-4 Parameter

• Sensor parameters can be verified and changed.

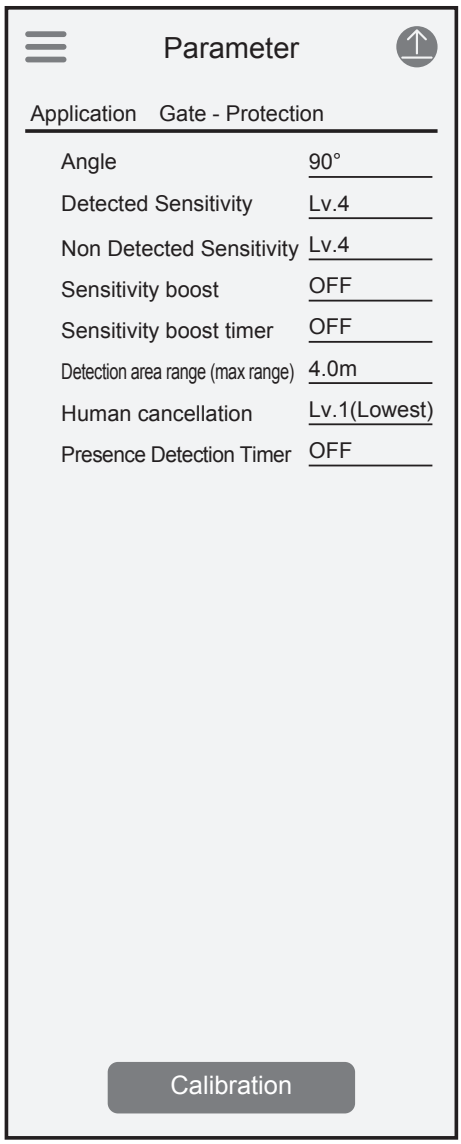

■ Application

Change by tapping Menu icon > Favorite > Select application.

[1] Angle

Select the sensor's installation angle.

[2] Detected Sensitivity

Refer to page 33

[3] Non Detected Sensitivity

Refer to page 33

[4] Sensitivity boost

Refer to page 34

[5] Sensitivity boost timer

Refer to page 34

[6] Detection area range (max range)

Refer to page 33

[7] Human cancellation

Refer to page 35

[8] Presence Detection Timer

Refer to page 35

⚠CAUTION

• After changing settings, be sure to tap the Send icon to send the settings to the sensor.

Calibration

• If the operation is unstable, perform this only when an incorrect detection or detection oversight is observed.
• Be sure to perform this action when there are no vehicles or pedestrians in the area.

7-5 Input and Output

• Sensor input and output settings can be verified and changed.

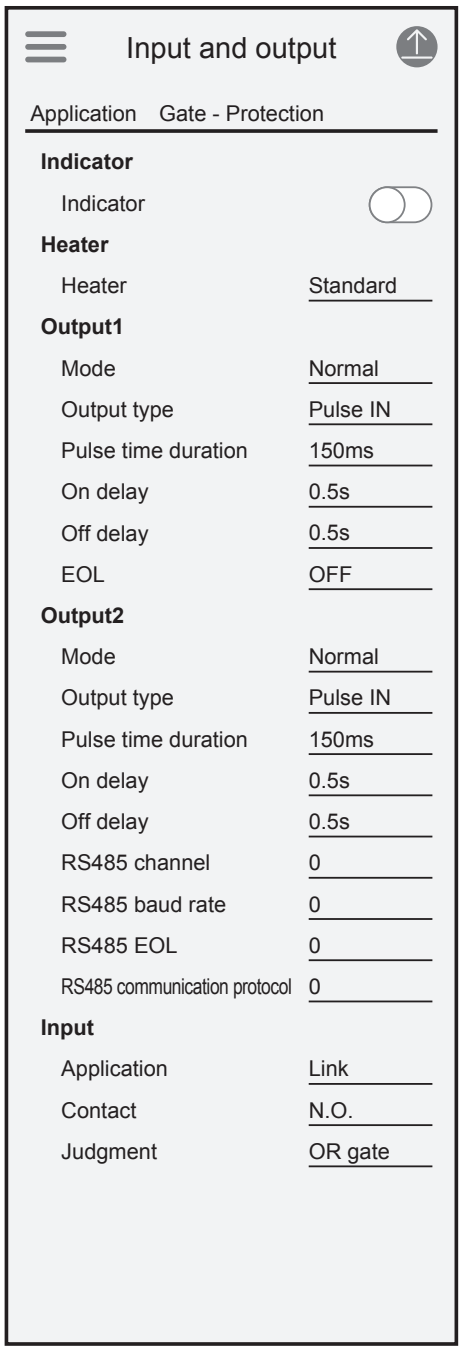

■ Application
Change by tapping Menu icon > Favorite > Select application.

● Indicator
[1] Indicator
The operation indicator is lit when the sensor makes a detection during operation.

● Heater
[2] Heater
Normally set this to Standard.

● Output
[3] Mode
Refer to page 36
[4] Output type
Refer to page 36
[5] Pulse time duration
Refer to page 36
[6] On delay
Refer to page 37
[7] Off delay
Refer to page 37
[8] EOL

● RS485 (Output2, RS Models Only)
[9] RS485 channel
[10] RS485 baud rate
[11] RS485 EOL
[12] RS485 communication protocol
Set according to the connected device.

● Input
[13] Application
[14] Contact
[15] Judgment
Set according to the connected device.

⚠CAUTION

• After changing settings, be sure to tap the Send icon to send the settings to the sensor.

7-6 Info

• Sensor information can be verified.

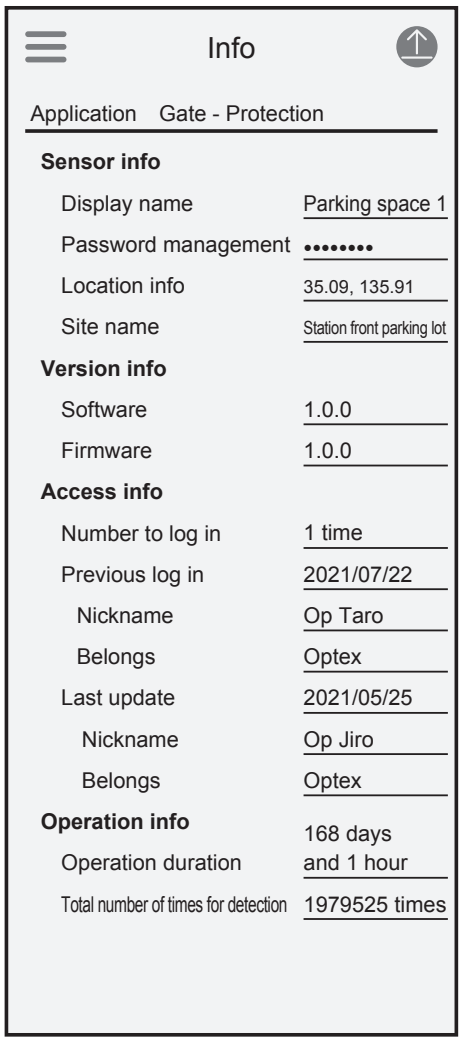

■ Application
Change by tapping Menu icon > Favorite > Select application.

● Sensor info (Editable)

[1] Display name
The sensor name that was set at the first log in is displayed.

[2] Password management
Passwords can be managed.

[3] Location info
The location information that was set at the first log in is displayed.

[4] Site name
The site name that was set at the first log in is displayed.

● Version info

[5] Software

[6] Firmware
When contacting us, please check the version information.

● Access info

[7] Number to log in (max. 4,294,967,295 times)
Indicates the total number of times someone has logged in to the sensor.

[8] Previous log in: The date of the last log in is displayed. YYYY/MM/DD
Nickname: User information of the user who last logged in is displayed.
Belongs: User information of the user who last logged in is displayed.

[9] Last update: The date of the last update of the settings is displayed. YYYY/MM/DD
Nickname: User information of the user who last updated the settings is displayed.
Belongs: User information of the user who last updated the settings is displayed.

● Operation info

[10] Operation duration
Total duration from operation start is displayed.

[11] Total number of times for detection
(max. 4,294,967,295 times)
The total number of detections made since operation started is displayed.

* Operation information returns to 0 when the power is turned off, or when the settings are reset to their factory defaults.
When the number reaches the maximum, it stops there.

8 Preparation before Operation

8-1 Selecting an Application

- Select the application that matches how the sensor is to be used. Do not use the product for purposes other than the selectable applications. Some models are not suitable for some applications.

  Gate - activation : Opening/closing a gate, activating a gate system
  Gate - safety : Ensuring vehicles pass through a gate safely
  Vehicle space : Judging presence/absence of vehicles by being installed at the back of a vehicle space.
  Traffic control : Activating an alert to notify of an exiting vehicle.
  Car count : Counting passing vehicles (does not include the passage number count function)

8-2 Main Parameters

- Be sure to set the installation angle and detection range according to the installation conditions.
- The installation angle and corresponding layout for each application are shown below.

Application	Angle	
Gate Activation	90°	45°
Gate Passing	90°	45°
Vehicle Space	Center	Corner
Car Count	90°	
Traffic Control	45°	

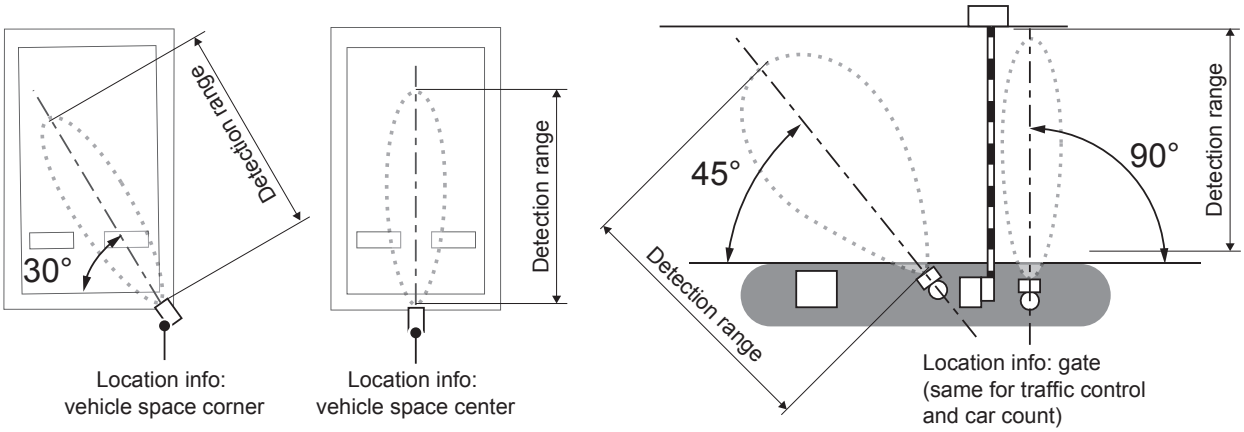

NOTE Detection range when installing in the corner of a vehicle space or at 45°

When installing in the corner of a vehicle space or at 45 degrees, set the detection range by referring to the table below.
When it is set too long, the sensor may detect vehicles in neighboring vehicle spaces.

Vehicle Space Corner Installation

Vehicle Space Width	Detection Range Setting
2000mm (79in.)	3.0m (9.8ft.) or less
2200mm (87in.)	3.5m (11.5ft.) or less
2400mm (94in.)	4.0m (13.1ft.) or less
2600mm (102in.)	4.0m (13.1ft.) or less
2800mm (110in.)	4.5m (14.8ft.) or less
3000mm (118in.)	5.0m (16.4ft.) or less
3200mm (126in.)	5.5m (18ft.) or less
3400mm (134in.)	6.0m (19.7ft.) or less
3600mm (142in.)	6.0m (19.7ft.) or less
3800mm (150in.)	6.5m (21.3ft.) or less

45° Installation

Vehicle Passage Width	Detection Range Setting
2500mm (98in.)	2.5m (8.2ft.) or less
3000mm (118in.)	3.0m (9.8ft.) or less
3500mm (138in.)	4.0m (13.1ft.) or less
4000mm (157in.)	4.5m (14.8ft.) or less
4500mm (177in.)	5.5m (18ft.) or less
5000mm (197in.)	6.0m (19.7ft.) or less
5500mm (217in.)	7.0m (23ft.) or less
6000mm (236in.)	7.5m (24.6ft.) or less
6500mm (256in.)	8.0m (26.2ft.) or less
7000mm (276in.)	Install at 90°

- After configuring the settings, actually enter and exit with a vehicle and check the sensing performance (refer to pp. 29–30).

8-3 Calibration (Name at OVS-01: Calibration)

● What Is Calibration?
This function records (memorizes) the background of the detection area when no pedestrians or vehicles are present.
This process makes the sensor's vehicle detection capability higher and provides stable detection.

NOTE Performing calibration correctly

- Perform calibration after every sensor installation.
- It must be performed without vehicles, pedestrians, work tools, or any other temporary objects which may be moved later in the detection area.
- If a vehicle or pedestrian enters the detection area during the calibration, perform calibration again.
- If any noticeable changes occur around the detection area (such as construction of a wall or fence), you must perform calibration again.
- If the sensor's installation height or direction has been changed after the calibration, perform calibration again.

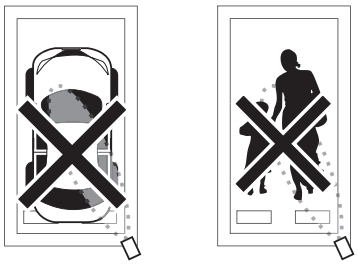

● How to Perform Calibration

[1] Verify that there are no vehicles, pedestrians, work tools, or any other temporary objects which may be moved later in the detection area. If anything is present, remove it from the detection area.

[2] Press the Calibration button in the application and confirm that the screen has changed to the "Calibrating" screen.
The operation indicator blinks in purple during calibration.

[3] When the calibration is completed, the screen in the application changes, and the operation indicator turns to solid blue.

● Calibration Cancel
Calibration will automatically stop within 10 seconds.
If an error message is displayed and the operation indicator is blinking in red and blue alternately, perform calibration again.

NOTE Errors during calibration

- If there is a movement that triggers a sensor reaction during calibration, the operation indicator blinks in red and blue alternately, resulting in a calibration error.
- The error may be caused by the following. Remove the cause of the error and perform calibration again. If the problem is not resolved, refer to "9-2 Detection Area Range" (p. 33) to reduce the sensor's detection range.
  - The sensor detects an object such as a wheel stopper, or a pedestrian in the detection area.
  - The sensor is installed too low and detects the ground.
  - The sensor pole is tilted and the sensor detects the ground.
  - The sensor installation direction is not correct, and the sensor is detecting a vehicle or wall (fence) in proximity.
- Calibration may take longer than normal if the sensor detects a moving object during calibration.

8-4 Detection Area Check

● Detection Area Check Function
This function allows you to virtually check the invisible detection area using indicators on the application or the operation indicator.
It is possible to verify the correct angle and size of the detection area.
During this process, the human cancellation function is disabled, and any moving vehicles and pedestrians are detected.
* Be sure to perform the area check after transmitting the settings and performing calibration.

● How to Check the Detection Area
On the “Status” screen of the application, turn ON the area check mode. The mode changes to detection area check mode, and the operation indicator blinks in blue.
(If the operation indicator keeps blinking in blue for 30 seconds, the mode goes back to normal operation mode.)
If there is a pedestrian or object within the detection area, the operation indicator’s color changes to yellow or red.
(The operation indicator’s color changes depending on the detection condition.)
If it is not blinking in blue, remove the object to outside of the detection area, and confirm that the indicator blinks in blue.
If the operation indicator is blinking in yellow while there is no pedestrian or object in the detection area, perform calibration again.

During normal area check mode

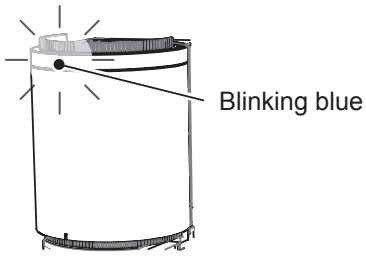

When there is a pedestrian or an object

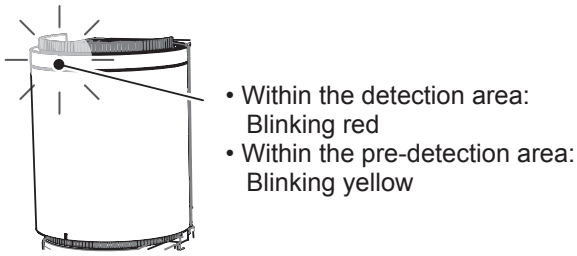

* The on-delay/off-delay setting is not applied during the detection area check mode.

NOTE Countermeasures during area check mode

• If the detection area is set too short, the original detection capability may be degraded. If an object in the detection area can be removed, be sure to do so as a countermeasure.

⚠CAUTION

• If detection (non-detection) occurs in an unpredicted location during area check mode, adjust the sensor’s installation angle and securely attach its covers with screws, set the detection range again, and be sure to perform **calibration**.

● For a Vehicle Space

[1] Stand at the center of the vehicle space (position [1] in the figure below), and walk in the direction the vehicle will move. The position where the operation indicator changes from blinking blue to blinking red (detection status) is the edge of the detection area.
(In normal operation mode, the detection occurs a little ahead of the detection area edge.)
If the detection area is not as expected, adjust the sensor's installation direction and/or the detection range again.

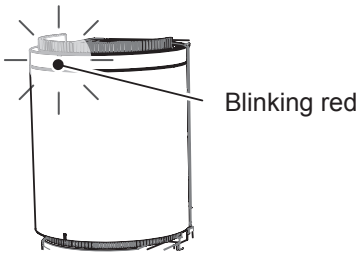

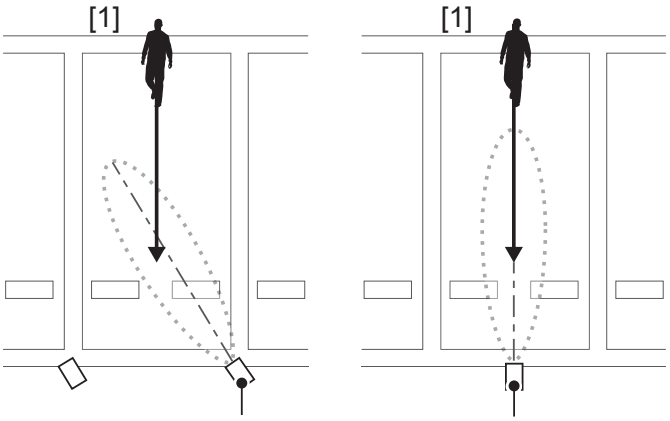

Sensor installation position: vehicle space corner

Sensor installation position: vehicle space center

[2] Stand at the edge of the vehicle lane (positions [2] and [3] in the figure below), walk along the border and verify that non-detection status is maintained. (Operation indicator blinks in blue.)
If the operation indicator blinks in a color other than blue (detection status), adjust the sensor's installation direction and/or detection range, and restart from [1].

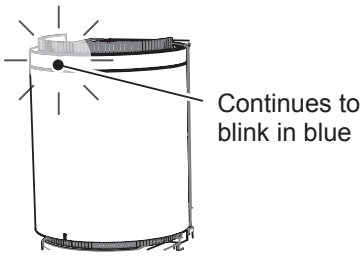

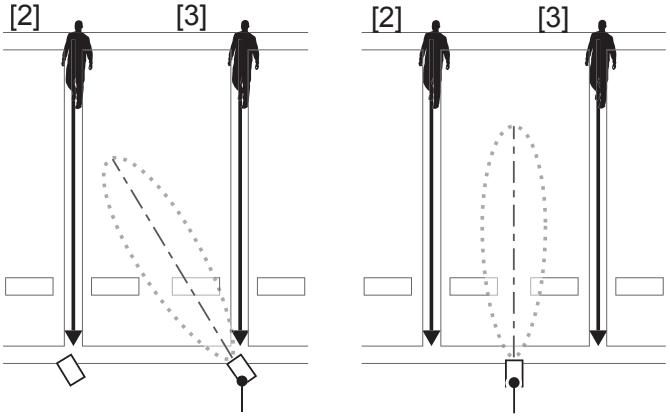

Sensor installation position: vehicle space corner

Sensor installation position: vehicle space center

[3] After verifying the detection area, turn OFF area check mode. By turning it OFF, the mode switches back to normal operation mode and the operation indicator turns to solid blue.

* If the operation indicator keeps blinking in blue (non-detection status) for 30 seconds, it will automatically change back to normal operation mode.

■ System Operation Check

After verifying the detection area, use a vehicle to check the entire operation of the parking space devices.
For the operation check, park a vehicle on the center and at four corners, and verify proper operation.

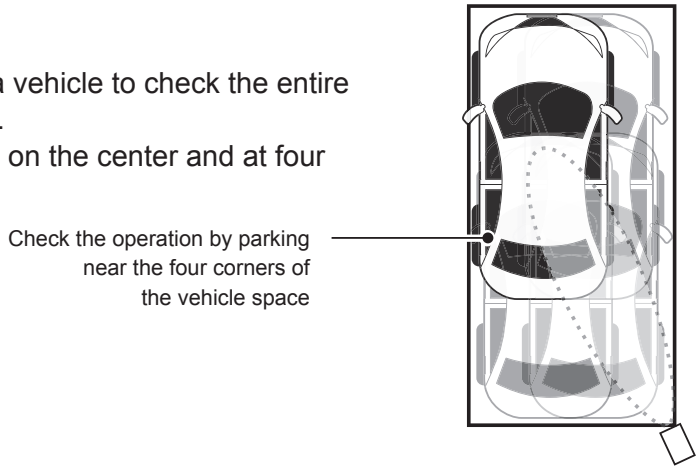

● For Gate, Car Count, and Traffic Control

[1] Stand at the center of the vehicle lane (position [1] in the figure below) and walk in the direction of vehicle access. The position where the operation indicator changes from blinking blue to blinking red (detection status) is the edge of the detection area.
(In normal operation mode, the detection occurs a little ahead of the detection area edge.)
If the detection area is not as expected, adjust the sensor's installation direction and/or the detection range again.

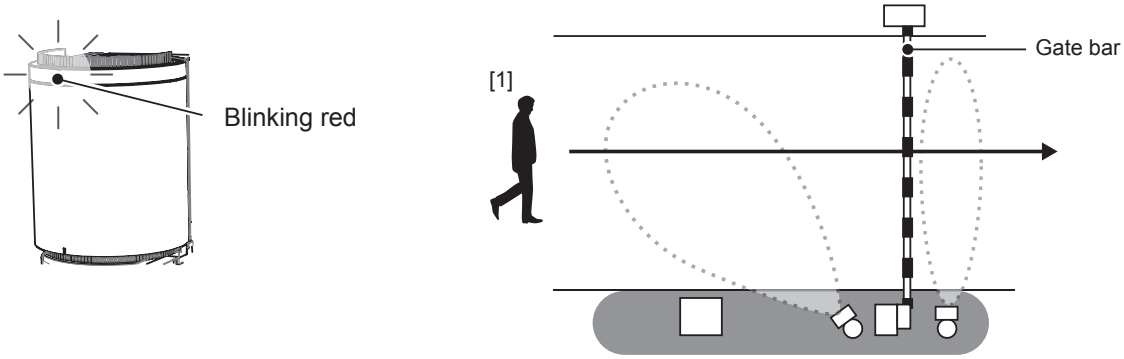

[2] Stand at the edge of the vehicle lane (position [2] in the figure below), walk along the border and verify that non-detection status is maintained. (Operation indicator blinks in blue.)
If the operation indicator blinks in a color other than blue (detection status), adjust the sensor's installation direction and/or detection range, and restart from [1].

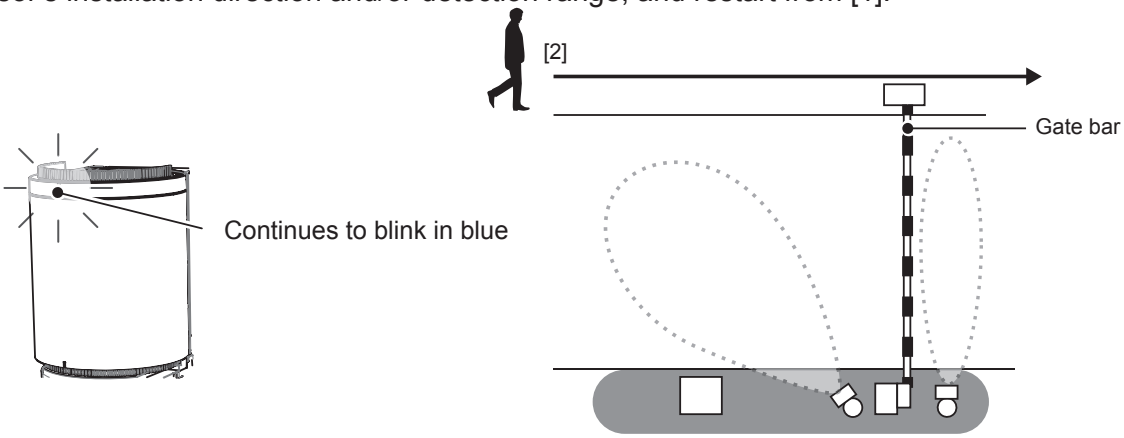

[3] After verifying the detection area, press the Area Check button again. By pressing the button, it switches to normal operation mode, and the operation indicator turns to solid blue.
* If it keeps blinking in blue (non-detection status) for 30 seconds, it will automatically change back to normal operation mode.

■ System Operation Check

After verifying the detection area, use a vehicle to check the entire operation of the parking space devices.
For the operation check, verify proper operation with a vehicle parked on the left side, center, and right side of the lane.

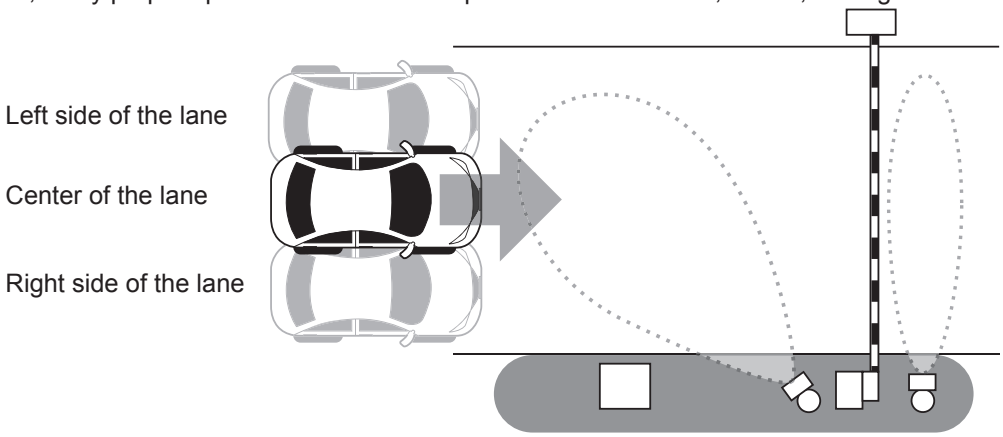

8-5 Other Functions

● Operation Indicator ON/OFF Function

Whether or not the operation indicator turns on can be set from the application.
Set it from the “LED” item on the “Input and output” screen.

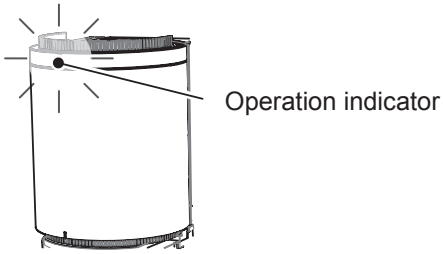

● Heater ON/OFF Function

To minimize the influence of frost and snow, the sensor unit has a built-in heater. The heater is automatically activated when the external temperature drops to 5°C (41°F) or lower.
(The heater is automatically deactivated when the external temperature reaches 5°C (41°F) or higher.)

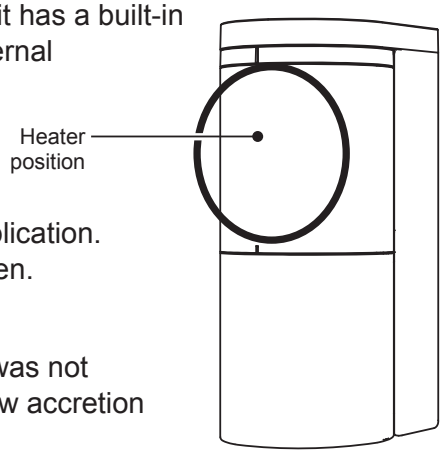

Whether or not the heater is active can be set from the application.
Set it from the “Heater” item on the “Input and output” screen.

Reference
During the assessment, snow accretion was not confirmed at −10°C (14°F). However snow accretion may occur at −10 to 5°C (14 to 41°F).

● Unsuitable Environmental Notification

If a large metal object (e.g. a shutter) is in front of the sensor, the microwave performance may be affected, and the sensor operation may become unstable. In such a case, the operation indicator blinks in green during sensor standby to notify of an unsuitable environment.
When the operation indicator blinks in green, check for a large metal object in front of the sensor, and, if possible, install the sensor in a position free of such metal objects.
* Even if the operation indicator blinks green, it does not necessarily signify that the sensor is operating in an unstable way.

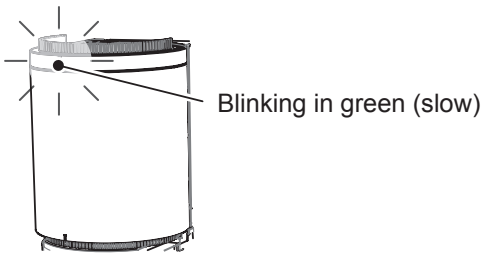

● Sensor Reset

All of the settings, including passwords and calibration values, can be reset to their factory defaults. If the sensor is relocated, reset it.
Hold the Reset button for **5 seconds or longer** to reset to the factory settings. When the reset process is completed, the operation indicator turns solid yellow for 2 seconds.
On the application, a reset can be performed from the menu item “Reset to factory settings.”

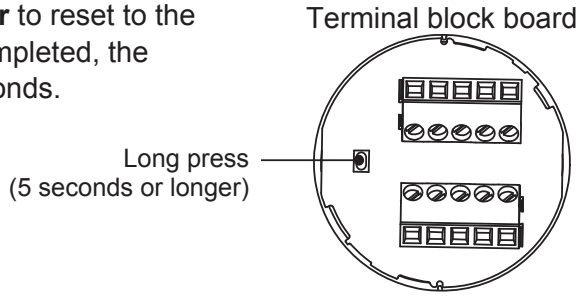

9 Advanced Installation (Applied)

The following setting items should be configured if the sensor does not operate as expected during a system operation check or if an error occurs. These do not need to be set for normal installation. Change the settings as required using the application.

9-1 Angle

The sensor processes detection responses based on the “Angle” parameter.
Set the “Angle” parameter according to the installation conditions.

9-2 Detection Area Range (Max. Range)

If the detection range is set too long, the sensor may mistakenly detect objects outside of the detection area. On the other hand, if it is set too short, detection becomes difficult and some objects may be missed during detection.

9-3 Detection Sensitivity

The detection sensitivity parameter adjusts the susceptibility of detection when a vehicle enters the detection area.
The detection and human cancellation rates have the relationship shown in the figure below.
In normal cases, use with sensitivity level 4.

Detection sensitivity	1	2	3	4	5	6	7
Vehicle detection capability	Low						High
Human cancellation rate	High						Low

NOTE This setting may need to be changed if:

- The sensitivity needs to be increased : Sometimes a vehicle is not detected.
  Detection response is too slow.
- The sensitivity needs to be decreased : Pedestrians are detected.
  Vehicles passing by are mistakenly detected.

9-4 Non-detection Sensitivity

The non-detection sensitivity parameter adjusts the susceptibility to switch to the non-detection status when a vehicle leaves the space, leaving the space empty.
The detection and human cancellation rates have the relationship shown in the figure below.
In normal cases, use with sensitivity level 4.

Non-detection sensitivity	1	2	3	4	5	6	7
Detection hold capability	Low						High
Misdetection rate	High						Low

NOTE The sensitivity may need to be changed if:

- The sensitivity needs to be increased: The status becomes non-detection even though there is a vehicle
- The sensitivity needs to be decreased: The status does not become non-detection even though a vehicle has left

9-5 Sensitivity Boost, Sensitivity Boost Timer

● Vehicle Space

The sensor may enter the non-detection status if a pedestrian or an object passes between the sensor and a vehicle, which is parked away from the detection area. Due to the sensor's characteristics, after entering the non-detection status, the status may not change back to the detection status even though there is a vehicle parked.
By enabling this function, re-detection is facilitated during a set time period after the sensor enters non-detection status. This can be adjusted along with the control time period of the parking lot system to avoid mischarging parking fees.

● Gate

This can be used to avoid contact between vehicles that move backwards soon after passing under the gate and the descending gate bar.
By enabling this function, sensitivity is raised for a set time period to facilitate detection of backward-rolling vehicles. Enable this function if vehicles may roll backward unintentionally due to a rising slope at a parking lot exit.

* This function cannot be used in parking lot systems where a reverse function for a descending gate bar is not available.

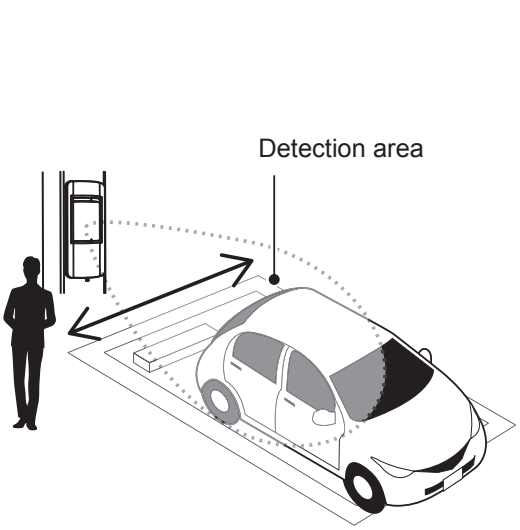

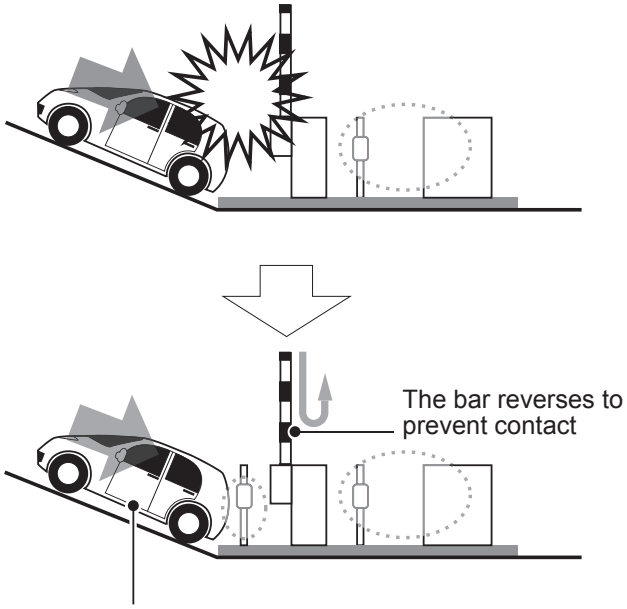

Increase the sensitivity for a certain time period after the sensor enters non-detection status. This facilitates detection of backward rolling vehicles.

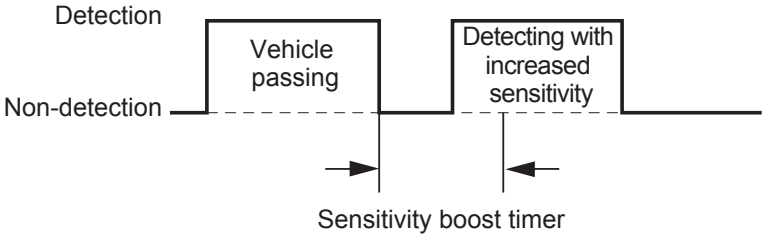

NOTE Caution on usage

- At parking lot exits where vehicles tend to stall, set the sensitivity boost timer higher as required.
- In order to prevent the sensor entering non-detection, set the off-delay timer to be longer. However, making it longer reduces sensitivity, so take care when adjusting this.
- While sensitivity boost is enabled, vehicles, pedestrians, and other objects are more likely to be detected.

9-6 Human Cancellation

The human cancellation parameter makes detection less likely when a pedestrian enters the detection area. Adjust this after adjusting the detection sensitivity and making sure that target vehicles are fully detected.
The detection response time and human cancellation rate have the relation shown in the figure below. In normal cases, use with sensitivity level 1.

Human cancellation	1	2	3	4	5	6	7
Human cancellation rate	Low						High
Detection response time	Fast						Slow

NOTE This setting may need to be changed if:

- The sensitivity needs to be increased ····· Pedestrians are sometimes detected. (Only when vehicles are fully detected)
- The sensitivity needs to be decreased ···· Sometimes a vehicle is not detected. Vehicle detection speed is too slow.

9-7 Presence Detection Timer

The presence detection timer starts calibration regularly, regardless of the detection status. This prevents continuing incorrect detection by the sensor when the ambient environment changes.

NOTE This setting may be needed if:

- There is construction, or the ambient environment is prone to changes
- Signboards and blocks may be placed
- Heavy trucks, etc. may be parked outside of the detection area

10 Input and Output Settings

Types and methods of outputs as well as types and movements of inputs can be selected according to the connected devices and applications.

10-1 Mode

Signals can be selected according to the application of the output signals.
Refer to the section below and make a selection.
Note that this sensor is made to output normal detection signals accurately, and other modes are made to output the information gained through the process. This sensor is not specialized for the following applications.

Normal : Outputs normal detection signals.
Guarding (Long) : Outputs pre-detection signals. This is useful to activate a sensor camera or a camera.
Guarding (Short) : This is useful to activate a device when a pedestrian passes between the sensor and a vehicle.
Vehicle space camera activation
: This is useful to activate a camera installed in the vehicle space.
Mask : This is useful to notify that the sensor front is blocked and detection is affected.

10-2 Output Types and Pulse Time

Output methods can be selected according to the connected devices.
Normally select Holding.
Signal characteristics for each type are shown below.
When “Pulse” is selected, the pulse time (signal width) can be changed.

Holding : Outputs of detection signals are held during detection.
Pulse IN : A signal is output only when a detection occurs. The pulse time can be changed.
Pulse OUT : A signal is output only when the detection status switches to non-detection. The pulse time can be changed.

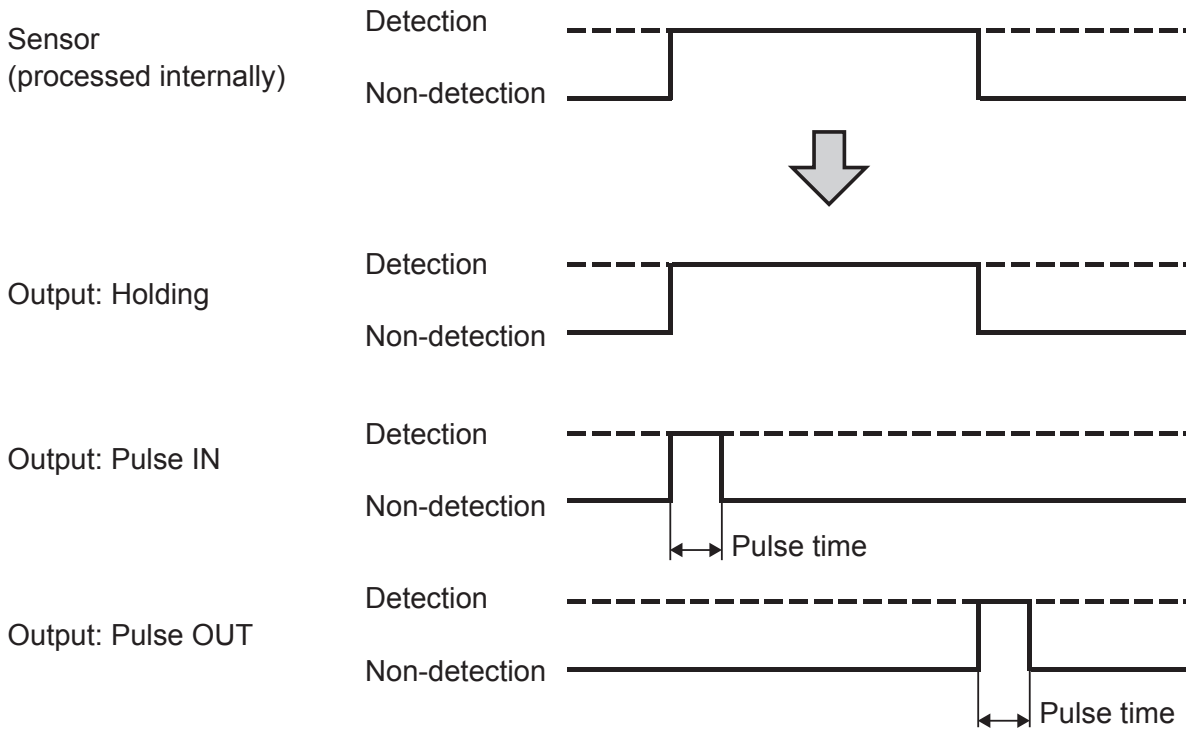

10-3 On-Delay Timer/Off-Delay Timer

On-delay timer/off-delay timer is the time between the sensor status change and the relay output change. Setting the timer shorter makes the response time faster.
Note that detection also needs a response time, which is the time for the sensor to recognize an object and make the detection, separately from the timer time.

On-delay: Time between detection status and relay output ON
Off-delay: Time between non-detection status and relay output OFF

On-delay	OFF	0.5	1	2	3	4		
Off-delay	OFF	0.5	1	2	3	10	30	60
Detection stability	Low							High
Response	High							Low

[Example] On-delay: 500ms, off-delay: 1s

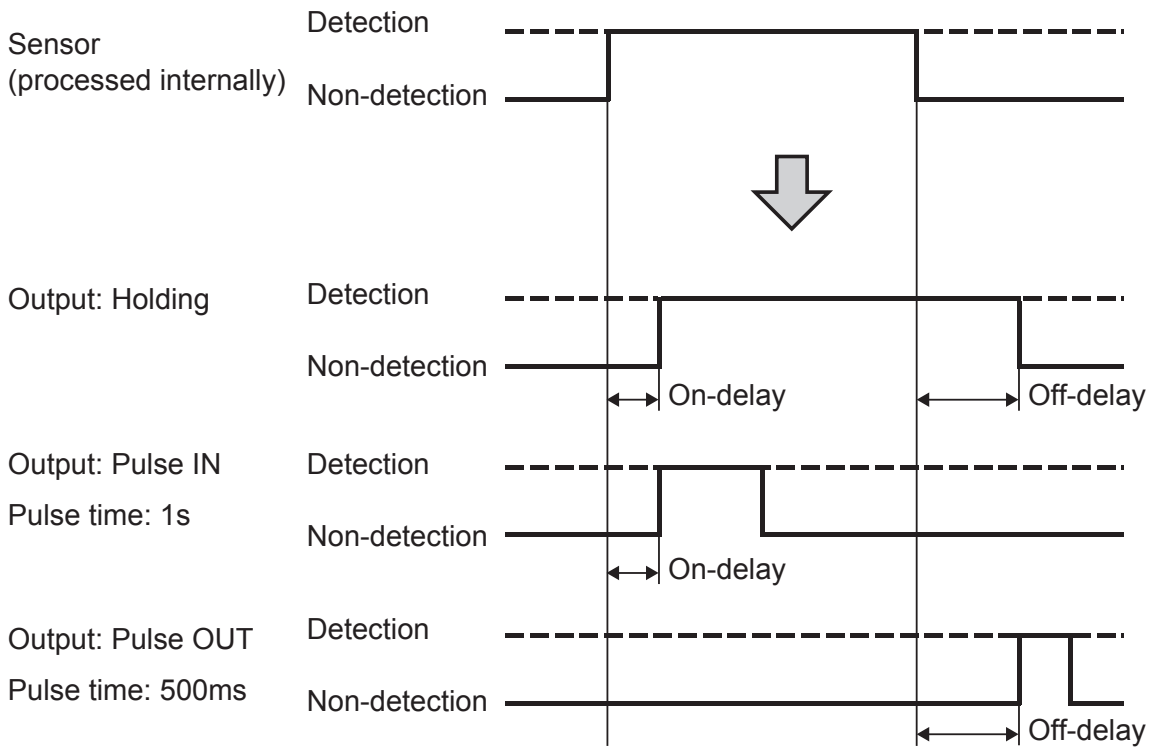

NOTE This setting may need to be changed if (when output type is Holding):

- The timer needs to be set shorter : When a quick response is required

- The timer needs to be set longer
  - On-delay : Even if the sensor momentarily enters detection status in an unsuitable environment, such as with high pedestrian traffic, this prevents the relay output from changing to ON and provides stable detection.
  - Off-delay : Even if the sensor momentarily enters non-detection status in an unsuitable environment, such as during heavy rain, this prevents the relay output from changing to OFF and provides stable detection.

10-4 Input

By inputting signals from other devices, outputs linked to other devices can be made.
Change contacts according to the connected devices.
Connect signals lines from a startup sensor or controller to the input terminals.

Application: Link

When operating a charging system, the sensitivity can be raised by using inputs from an external source.

Application: Prevention

Sensor outputs can be stopped by using inputs from an external source.

11 Troubleshooting

Symptom	Cause	Action
Operation indicator does not turn ON.	Power may not be supplied.	Connect to a 12–24VAC/DC power supply.
	The supply voltage may not be correct.	Connect to a 12–24VAC/DC power supply.
	The power supply polarity is wrong (a wrong polarity does not cause a failure but the product will not work).	Wire positive/negative contacts of the sensor power source correctly.
Sensor detection is not correctly conveyed to a system device.	The relay output wiring may not be correct.	Wire the relay output correctly.
	Output contact type is incorrect.	Select the correct output contact type for the system device.
The operation indicator blinks in red and blue alternately during calibration (calibration error).	A pedestrian or an object in the detection area is detected.	Remove the pedestrian or object (e.g. flag, banner, weeds) in front of the sensor. If it cannot be removed, reduce the detection range.
	The direction of the sensor (detection area) is not correct.	Adjust the sensor's direction so that it is not affected by nearby vehicles, walls (fences), or gate bars.
A vehicle entering the detection area is occasionally not detected or never detected.	Power may not be supplied.	Connect to a 12–24VAC/DC power supply.
	The supply voltage may not be correct.	Connect to a 12–24VAC/DC power supply.
	Calibration is not properly performed.	Perform calibration properly.
	The direction of the sensor (detection area) is not correct.	Adjust the sensor's direction (detection area) to face the correct direction.
	The sensor may be affected by the background.	Perform calibration again
	The detection range may be too short.	Increase the detection range.
	Detection sensitivity is too slow.	Increase the detection sensitivity.
	Human cancellation is high.	Lower the human cancellation.
The sensor does not revert back to non-detection status when a vehicle leaves the detection area, or takes long to change status.	Non-detection sensitivity is too high.	Reduce the non-detection sensitivity.
	There is a pedestrian, bicycle, large package, tall weeds, etc. in the detection area.	Remove these objects from the detection area. If they cannot be removed, reduce the detection range.
	There is an object attached to the sensor surface such as chewing gum.	Remove the object.
	Calibration is not properly performed.	Perform calibration properly.
	The direction of the sensor (detection area) is not correct.	Adjust the sensor's direction (detection area) to face the correct direction.
	Installation location and settings of the sensor are incorrect.	Select the "Application" and "Angle" according to the installation location, and adjust the parameters.
	A vehicle is parked partially in the detection area.	Guide the vehicle so that it is parked within the detection area.
	Off-delay timer is too long.	Reduce the off-delay timer.
A vehicle was detected, but it changed to non-detection.	Non-detection sensitivity is too low.	Increase the non-detection sensitivity.
	The detection range may be too short.	Increase the detection range.
	The direction of the sensor (detection area) is not correct.	Adjust the sensor's direction (detection area) to face the correct direction.
	Installation location and settings of the sensor are incorrect.	Select the "Application" and "Angle" according to the installation location, and adjust the parameters.
	A vehicle is parked partially in the detection area.	Guide the vehicle so that it is parked within the detection area.
	Off-delay timer is too short.	Increase the off-delay timer.
The sensor detects a vehicle outside of the detection area.	Detection sensitivity is too high.	Reduce the detection sensitivity.
	The detection range is too long.	Reduce the detection range.
	The direction of the sensor (detection area) is not correct.	Adjust the sensor's direction (detection area) to face the correct direction.
The sensor detects a pedestrian passing through the sensor's detection area.	Detection sensitivity is too high.	Reduce the detection sensitivity.
	Human cancellation is low.	Increase the human cancellation.
	More than one pedestrian is passing.	The sensor may detect a crowd. Take measures to prevent people from entering the area.
The sensor detects a pedestrian with large baggage or a metal object passing through the sensor's detection area.	Detection sensitivity is too high.	Reduce the detection sensitivity.
	Human cancellation is low.	Increase the human cancellation.
	The metal object or baggage is too large.	The sensor may not discriminate between large objects and vehicles. Take measures to prevent people from entering the area.
Sensor detection is too slow. Detection is required from a farther location.	Detection sensitivity is too slow.	Increase the detection sensitivity.
	Human cancellation is high.	Lower the human cancellation.
	The detection range may be too short.	Increase the detection range.
	"Application" selection is incorrect.	Check that selected "Application" matches the installation condition.
A vehicle returning immediately after leaving is not detected.	Sensitivity is too low.	Increase sensitivity.
	Sensitivity boost is disabled.	Enable the sensitivity boost function.
	Sensitivity boost timer is set too short.	Set the sensitivity boost timer longer.

Symptom	Cause	Action
A vehicle in the opposite lane is detected. (Application: gate passing, gate activation, car count, traffic control)	Detection sensitivity is too high.	Reduce the detection sensitivity.
	The detection range is too long.	At the front edge of the detection area, a vehicle in the opposite lane may be detected. Adjust the detection range so that the front edge of the detection area does not reach the opposite lane.
	The direction of the sensor (detection area) is not correct.	Adjust the direction (detection area) of the sensor to be parallel to the gate bar.
	A vehicle in the opposite lane is approaching slowly.	A vehicle approaching slowly in the opposite lane is likely to be detected.
Vehicles in neighboring vehicle spaces are detected. (Application: vehicle space)	Detection sensitivity is too high.	Reduce the detection sensitivity.
	The detection range is too long.	Reduce the detection range.
	The direction of the sensor (detection area) is not correct.	Adjust the sensor's direction (detection area) to face the correct direction.
	Installation location and settings of the sensor are incorrect.	Select the "Application" and "Angle" according to the installation location, and adjust the parameters.
	A vehicle in the neighboring vehicle space is parked partially over the space. A vehicle in the neighboring vehicle space has its door open.	If a part of a vehicle is in the detection area, it may be detected.
The gate bar is detected. The gate bar repeatedly opens and closes. (Application: gate passing, gate activation)	Detection sensitivity is too high.	Reduce the detection sensitivity.
	The detection range is too long.	Reduce the detection range.
	Installation position of the sensor is too close to the bar.	Install the sensor 700mm (28in.) away from the gate bar.
	The direction of the sensor (detection area) is not correct.	Adjust the direction (detection area) of the sensor to be parallel to the gate bar.
	The gate bar has a curtain attached.	Remove the curtain.

If you still can't solve the problem even after following the instructions above, contact our sales representative or sales office.

12 Specifications

12-1 Specifications

Name		ViiK Gate (vehicle detection sensor, exposed type)		ViiK Cell (vehicle detection sensor, embedded type)	
Model		OVS-02GT	OVS-02RS	OVS-02BRS	OVS-02B
Detection Method		Microwave (FMCW)			
Sensor Frequency		Microwave sensor: 24GHz, BLE communication: 2.4GHz			
Response		Min. 500ms			
Power Supply Voltage		12–24VAC/DC			
Consumption Current		Heater enabled: Max. 300mA, Heater disabled: Max. 80mA (at 24VDC)			
Output	1	Non-voltage output 30VDC, 0.3A or less (N.O./N.C.)			
	2	Non-voltage output 30VDC, 1A or less (N.O./N.C.)	-		Non-voltage output 30VDC, 1A or less (N.O./N.C.)
RS485		-	RS485 Max. 256 nodes		-
Detection Range		2.0–8.0m (6.6–26.2ft.) variable			
Detectable Vehicle Speed		2–35km/h (1.2–22mi/h)			
Application		Gate activation/safety/vehicle space/ traffic control/car count	Vehicle space		Gate activation/safety/vehicle space/ traffic control/car count
Device Setting	Angle	Vehicle space: center/corner, Gate: 90°/45°, Traffic control: 45°, Car count: 45°			
	Detection Range	2.0–8.0m (6.6–26.2ft.) (in every 0.5m (1.6ft.))			
	Detection Sensitivity	Level 1 to 7			
	Non-detection Sensitivity	Level 1 to 7			
	Sensitivity Boost	OFF/Low/Middle/High			
	Sensitivity Boost Timer (seconds)	OFF/0.5/1/2/3/4/5/10/20/40			
	Human Cancellation	Level 1 to 7			
	Presence Detection Timer (minutes)	OFF/5/60/180/∞			
Indicator	ON/OFF	Switchable (with the smartphone application or by holding a magnet close to the unit)			
	Normal Operation	Starting up: solid cyan (3 seconds), Standby: solid green, Detected: solid red, Unsuitable environment: blinking green (slow), BLE connection: solid blue			
	Area Check Mode	Non-detection: blinking blue, Pre-detection: blinking yellow, Detected: blinking red			
	Calibration	Calibrating: blinking purple, Error: blinking red and blue alternately			
	Reset to Factory Setting	Reset completed: solid yellow (2 seconds)			
Ambient Temperature		−30 to 50°C (−22 to 122°F)			
Operating Ambient Humidity		95% max. (no condensation)			
Degree of Protection		IP66			
Installation Location		Indoor/outdoor pole installation (pole diameter: ø60.5mm (2.4in.)		Indoor/outdoor square pole installation (pole diameter: 90mm (3.5in.) or more)	
Installation Height		500 (to 530)mm (20 (to 21)in.) (distance from ground to bottom of unit)		750–800mm (30–31in.) (distance from ground to center of unit)	
Sensor Angle Adjustment		Left and right: ±93° (3° increments)		Left and right: ±30° (3° increments)	
Weight		770g (27oz) (including unit accessories)		770g (27oz) (including unit accessories)	
Accessories		Retaining screw × 4, Quick Manual		Bracket retaining screw × 4, Quick Manual	

Specifications are subject to change without notice for improvement.
<Notice> Please note that we are not responsible for any damage that occurs when the equipment is operated or installed improperly.

12-2 Detection Area Diagram

Microwave

[Unit: m (1m ≈ 3.3ft.)]

Top View

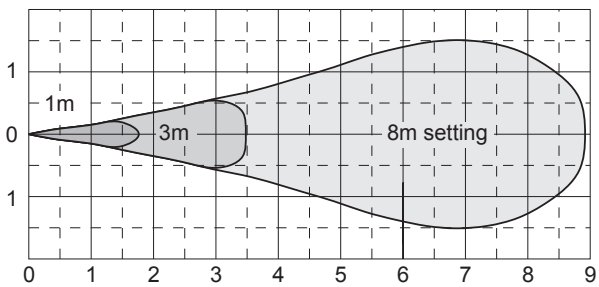

Side View

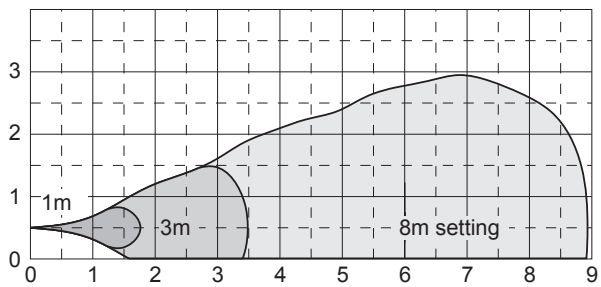

Installation height 500mm (20in.), Sensitivity: 4, Detection area check mode

* In normal operation mode, detection occurs within the detection area.

12-3 Dimensions

● Exposed Type

[Unit: mm (in.)]

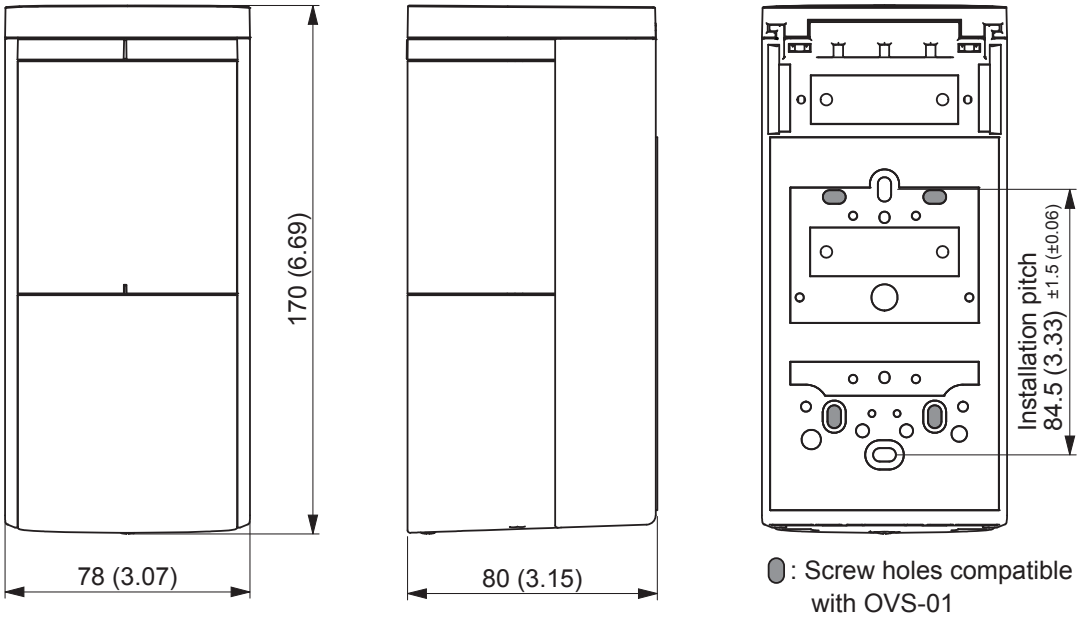

● Embedded Type

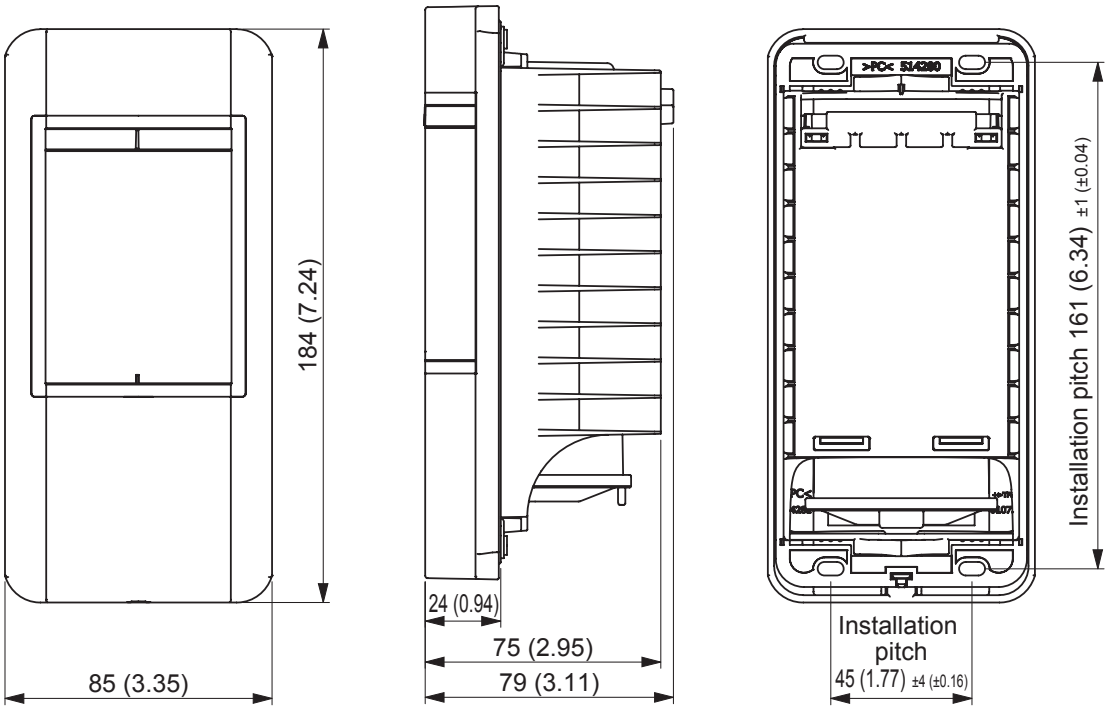

12-4 Options

● Pole Mounting Brackets

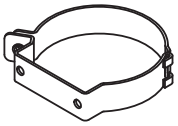

● Top/Bottom Angle Adjustment Plate (3°)

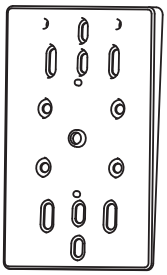

Up to three can be stacked in use.

Warranty
■ The warranty period is one year after the day of purchase (day of delivery) except in the following cases. ■ If the product, which has been used according to the installation instructions, fails within the warranty period, we will take responsibility and repair or exchange the product. ■ The following cases are not covered by this warranty even during the warranty period. • Failure resulting from misuse, improper use, or unjustifiable repair or modification. • Failure resulting from improper installation. • Failure resulting from shipment, drop, or impact after the purchase. • Failure resulting from use outside Japan. • Failure resulting from usage outside of the conditions and environments indicated in the installation instructions and other specifications.

FCC NOTICE
This device complies with part 15 of the FCC Rules. Operation is subject to the following two conditions:
(1) This device may not cause harmful interference, and (2) this device must accept any interference received, including interference that may cause undesired operation.
FCC WARNING(For USA)
Changes or modifications not expressly approved by the party responsible for compliance could void the user's authority to operate the equipment.

-NOTICE-
This equipment has been tested and found to comply with the limits for a Class B digital device, pursuant to part 15 of the FCC Rules. These limits are designed to provide reasonable protection against harmful interference in a residential installation. This equipment generates, uses and can radiate radio frequency energy and, if not installed and used in accordance with the instructions, may cause harmful interference to radio communications. However, there is no guarantee that interference will not occur in a particular installation. If this equipment does cause harmful interference to radio or television reception, which can be determined by turning the equipment off and on, the user is encouraged to try to correct the interference by one or more of the following measures:
-Reorient or relocate the receiving antenna.
-Increase the separation between the equipment and receiver.
-Connect the equipment into an outlet on a circuit different from that to which the receiver is connected.
-Consult the dealer or an experienced radio/TV technician for help.

-NOTICE-
1.The antennas cannot be exchanged.
2.To comply with FCC RF exposure compliance requirements, a separation distance of at least 20cm must be maintained between the antenna of this device and all persons.

-ISED NOTICE-
This device contains licence-exempt transmitter(s)/receiver(s) that comply with Innovation, Science and Economic Development Canada's licence-exempt RSS(s). Operation is subject to the following two conditions:
1. This device may not cause interference.
2. This device must accept any interference, including interference that may cause undesired operation of the device.
This equipment complies with ISED radiation exposure limits set forth for an uncontrolled environment and meets RSS-102 of the ISED radio frequency (RF) Exposure rules. This equipment should be installed and operated keeping the radiator at least 20cm or more away from person's body.

L'émetteur/récepteur exempt de licence contenu dans le présent appareil est conforme aux CNR d'Innovation, Sciences et Développement économique Canada applicables aux appareils radio exempts de licence.
L'exploitation est autorisée aux deux conditions suivantes :
1. L'appareil ne doit pas produire de brouillage;
2. L'appareil doit accepter tout brouillage radioélectrique subi, même si le brouillage est susceptible d'en compromettre le fonctionnement.
Cet équipement est conforme aux limites d'exposition aux rayonnements énoncées pour un environnement non contrôlé et respecte les règles d'exposition aux fréquences radioélectriques (RF) CNR-102 de l'ISDE. Cet équipement doit être installé et utilisé en gardant une distance de 20 cm ou plus entre le radiateur et le corps humain.

OPTEX

OPTEX CO.,LTD. (JAPAN)
(ISO 9001 Certified) (ISO 14001 Certified)
5-8-12 Ogoto Otsu Shiga 520-0101 JAPAN
TEL:+81-77-579-8670 www.optex.net

OPTEX (EUROPE)LTD. (UK)
TEL:+44-1628-631000 www.optex-europe.com

OPTEX SECURITY SAS (FRANCE)
TEL:+33-437-55-50-50 www.optex-security.com

OPTEX INC. (USA)
TEL:800-877-6656 (Toll free) www.optex-vs.com

OPTEX SECURITY Sp.zo.o. (POLAND)
TEL:+48-22-598-06-55 www.optex.com.pl

OPTEX KOREA CO., LTD. (KOREA)
TEL:+82-2-719-5971 www.optexkorea.com

OPTEX (DONGGUAN) CO., LTD.
SHANGHAI OFFICE (CHINA)
TEL:+86-21-34600673 www.optexchina.com