SHURE®

LEGENDARY
PERFORMANCE™

AXIENT DIGITAL

AD1 TRANSMITTER USER GUIDE

DRAFT 9.1.16

© 2016 Shure Incorporated
27A (Rev. 1)
Printed in China

LICENSING INFORMATION

Licensing: A ministerial license to operate this equipment may be required in certain areas. Consult your national authority for possible requirements. Changes or modifications not expressly approved by Shure Incorporated could void your authority to operate the equipment. Licensing of Shure wireless microphone equipment is the user's responsibility, and licensability depends on the user's classification and application, and on the selected frequency. Shure strongly urges the user to contact the appropriate telecommunications authority concerning proper licensing, and before choosing and ordering frequencies.

Information to the user

This equipment has been tested and found to comply with the limits for a Class B digital device, pursuant to Part 15 of the FCC Rules. These limits are designed to provide reasonable protection against harmful interference in a residential installation. This equipment generates uses and can radiate radio frequency energy and, if not installed and used in accordance with the instructions, may cause harmful interference to radio communications. However, there is no guarantee that interference will not occur in a particular installation. If this equipment does cause harmful interference to radio or television reception, which can be determined by turning the equipment off and on, the user is encouraged to try to correct the interference by one or more of the following measures:

- Reorient or relocate the receiving antenna.
- Increase the separation between the equipment and the receiver.
- Connect the equipment to an outlet on a circuit different from that to which the receiver is connected.
- Consult the dealer or an experienced radio/TV technician for help.

Note: EMC conformance testing is based on the use of supplied and recommended cable types. The use of other cable types may degrade EMC performance.

Please follow your regional recycling scheme for batteries, packaging, and electronic waste.

This device complies with Industry Canada licence-exempt RSS standard(s). Operation of this device is subject to the following two conditions: (1) this device may not cause interference, and (2) this device must accept any interference, including interference that may cause undesired operation of the device.

Le présent appareil est conforme aux CNR d'Industrie Canada applicables aux appareils radio exempts de licence. L'exploitation est autorisée aux deux conditions suivantes : (1) l'appareil ne doit pas produire de brouillage, et (2) l'utilisateur de l'appareil doit accepter tout brouillage radioélectrique subi, même si le brouillage est susceptible d'en compromettre le fonctionnement.

WARNING: Danger of explosion if battery incorrectly replaced. Operate only with Shure compatible batteries.

Note: Use only with the included power supply or a Shure-approved equivalent.

WARNING

- Battery packs may explode or release toxic materials. Risk of fire or burns. Do not open, crush, modify, disassemble, heat above 140°F (60°C), or incinerate.
- Follow instructions from manufacturer
- Only use Shure charger to recharge Shure rechargeable batteries
- WARNING: Danger of explosion if battery incorrectly replaced. Replace only with same or equivalent type.
- Never put batteries in mouth. If swallowed, contact your physician or local poison control center
- Do not short circuit; may cause burns or catch fire
- Do not charge or use battery packs other than Shure rechargeable batteries
- Dispose of battery packs properly. Check with local vendor for proper disposal of used battery packs.
- Batteries (battery pack or batteries installed) shall not be exposed to excessive heat such as sunshine, fire or the like

Australia Warning for Wireless

This device operates under an ACMA class licence and must comply with all the conditions of that licence including operating frequencies. Before 31 December 2014, this device will comply if it is operated in the 520-820 MHz frequency band. **WARNING:** After 31 December 2014, in order to comply, this device must not be operated in the 694-820 MHz band.

DRAFT 9.1.16

AD1 Axient Digital Bodypack Transmitter

The AD1 transmitter delivers superior audio performance in a compact, lightweight package. Efficient, ultra-linear RF performance maximizes the number of channels on-air in crowded RF environments. Advanced power management provides extended, rechargeable battery life and highly accurate status metering.

Features

- All-digital signal path delivers superior audio clarity and quality
- Ultra-linear RF performance places more channels on-air
- IR Sync function automatically tunes transmitter to the receiver frequency
- Shure lithium-ion rechargeable battery delivers up to 8 hours of runtime from a single charge
- Advanced control menu to adjust frequency and audio settings from the transmitter
- Lockable user interface prevents accidental or inadvertent changes to controls once settings are made
- Compatible with all Shure wireless microphones that have a TA4F connector.
- LEMO connector model available for use with LEMO connector microphones

Included Components

Bodypack rechargeable lithium-ion battery (2)	
Dual-band flexible antenna	
Threaded TAF4 adapter	WA340
Transmitter carrying case	WA610
Zipper bag	26A13
Belt clip	44A12547

Optional Accessories

Bodypack rechargeable lithium-ion battery	AXT910
Y-Cable for bodypack transmitters	AXT652
LEMO Y-cable for bodypack transmitters	AXT652LEMO3
Dual-band flexible antenna	AXT642
Portable bodypack charging station	AXT903
3-AA Battery Sled for AXT100 bodypack transmitter	AXT913
Instrument cable	WA302
Replacement belt clip	44A12547
Instrument cable with right angle 1/4" connector	WA304
Mute Switch for Bodypack	WA661
Mute Switch for 2 Bodypacks	WA662

DRAFT 9.1.16

AD1 Transmitter Overview

① **RF Antenna**
For RF signal transmission.

② **Display:**
View menu screens and settings. Press any control button to activate the backlight.

③ **Infrared (IR) Port**
Align with the receiver IR port during an IR Sync for automated transmitter programming.

④ **Control Buttons**
Use to navigate through parameter menus and change values.

⑤ **Battery Compartment**
Requires Shure SB900 rechargeable battery or 2 AA batteries.

⑥ **AA Battery Adapter**
Remove to accommodate a Shure SB900 battery

⑦ **SMA Connector**
Connection point for RF antenna.

⑧ **On/Off Switch**
Powers the unit on or off.

⑨ **Power LED**
- Green = unit is powered on
- Red = low battery or battery error (see Troubleshooting), Mute Mode enabled

⑩ **Input Jack**
- Connects to a 4-Pin Mini Connector (TA4F) microphone or instrument cable.
- Connects to a LEMO connector

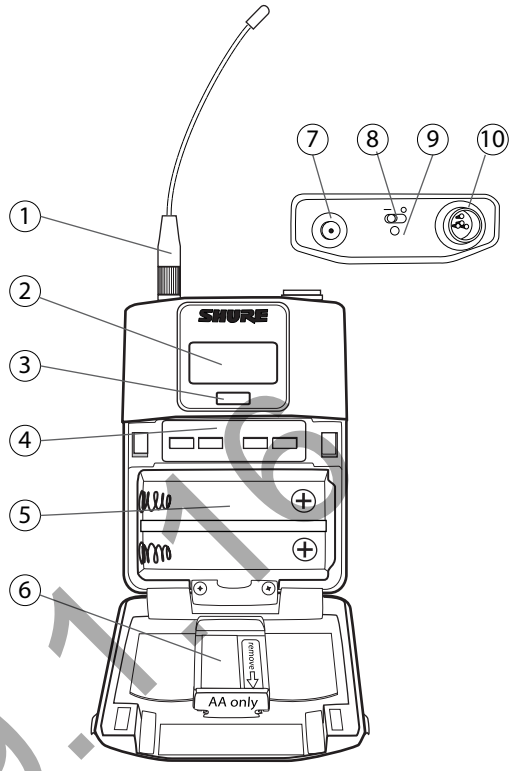

Wearing the Bodypack Transmitter

Clip the transmitter to a belt or slide a guitar strap through the transmitter clip as shown.

For best results, the belt should be pressed against the base of the clip.

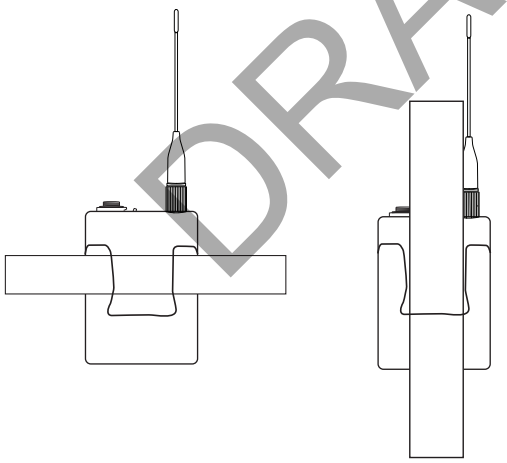

Transmitter Controls

Use to navigate through parameter menus and change values.

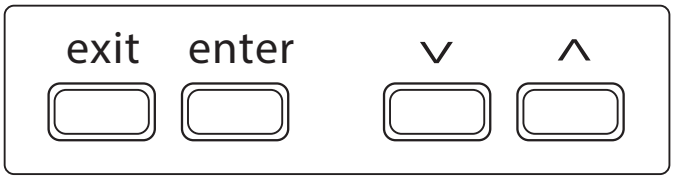

exit	Acts as a 'back' button to return to previous menus or parameters without confirming a value change
enter	Enters menu screens and confirms parameter changes
∨∧	Use to scroll through menu screens and to change parameter values

Locking the Controls

Lock transmitter controls to prevent accidental or unauthorized changes to parameters. The lock icon is shown on the home screen when the control lock in enabled.

1. From the **Utilities** menu, navigate to **Lock** and selection one of the following:
   - **Yes**: Locks the controls
   - **No**: Unlocks the controls
2. Press **enter** to save.

To quickly unlock a transmitter: Press **enter**, select **Yes**, and press **enter**.

DRAFT 9.1.16

Battery Installation

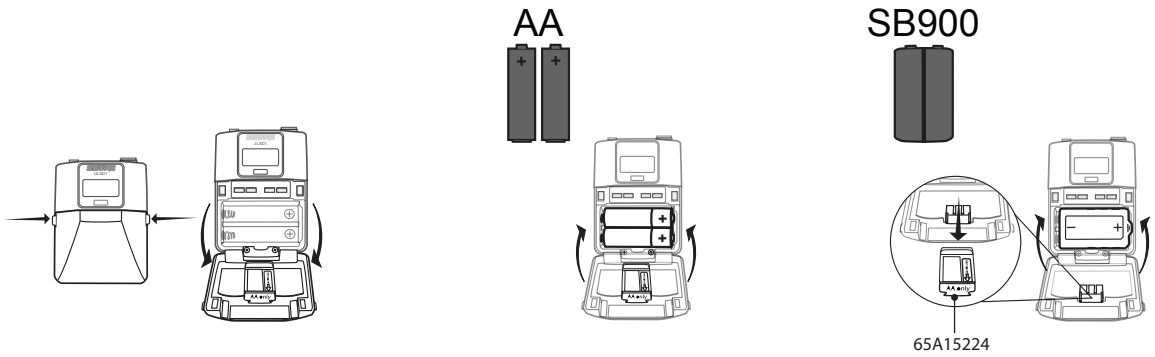

① **Accessing the Battery Compartment**

Press the side tabs on the bodypack or unscrew the cover on the handheld as shown to access the battery compartment.

② **Installing Batteries**

- **AA Batteries:** Place batteries (note polarity markings) and AA Adaptor as shown
- **Shure SB900 Battery:** Place battery as shown (note polarity markings), remove AA Adaptor from bodypack transmitter, stow AA Adaptor in door for handheld transmitter

Note: If using AA batteries, set the battery type using the transmitter menu.

Setting the AA Battery Type

To ensure accurate display of transmitter runtime, set the battery type in the transmitter menu to match the installed AA battery type. If a Shure SB900 rechargeable battery is installed, selecting a battery type is not necessary and the battery type menu will not be displayed.

1. Press the **menu** button to navigate to the battery icon.
2. Use the ▼▲ buttons to select the installed battery type:
   - **AL** = Alkaline
   - **nH** = Nickel Metal Hydride
   - **Li** = Lithium Primary
3. Press **enter** to save.

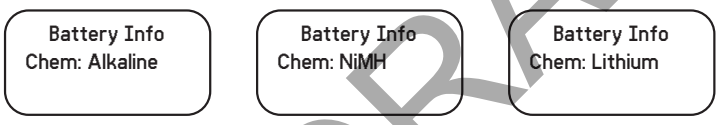

AA Battery Installation

Fully insert the batteries as shown to ensure proper battery contact and to allow the door to latch securely.

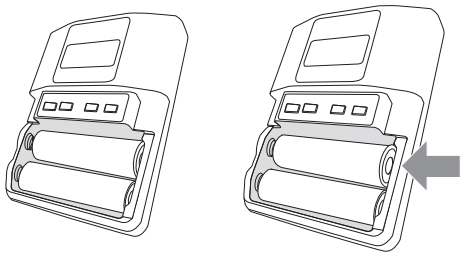

Correct Incorrect

DRAFT 9.1.16

Shure SB900 Rechargeable Battery

Shure SB900 lithium-ion batteries offer a rechargeable option for powering the transmitters. Batteries quickly charge to 50% capacity in one hour and reach full charge within three hours.

Single chargers and multiple bay chargers are available to recharge the Shure batteries.

Caution: Only charge Shure rechargeable batteries with a Shure battery charger.

Shure SB900 Runtime

1 mW	10 mW	20 mW
>11 hours	>11 hours	>7 hour

Checking Battery Info

When using an SB900 rechargeable battery, the receiver and transmitter home screens display the number of hours and minutes remaining.

Detailed information for the SB900 is displayed in the receiver **`Batt Info`** menu and the transmitter menu: **`Utilities`** > **`Batt Info`**

- **`Time:`** Battery runtime
- **`Health:`** Percentage of current battery health
- **`Charge:`** Percentage of change
- **`Cycles:`** Record of the number of charging cycles for the installed battery
- **`Temp:`** Battery temperature in Fahrenheit and Celsius
- **`mAh:`** Remaining mAh for the installed battery

Important Tips for Care and Storage of Shure Rechargeable Batteries

Proper care and storage of Shure batteries results in reliable performance and ensures a long lifetime.

- Always store batteries and transmitters at room temperature
- Ideally, batteries should be charged to approximately 40% of capacity for long-term storage
- During storage, check batteries every 6 months and recharge to 40% of capacity as needed

For additional rechargeable battery information, visit www.shure.com.

DRAFT 9.1.16

AA Batteries and Transmitter Runtime

Transmitters are compatible with the following AA battery types:

- Alkaline
- Nickel Metal Hydride (NiMH)
- Lithium Primary

A 5-segment battery indicator representing the charge level of the transmitter battery is displayed on the screens of the transmitter and receiver. The following tables contain the approximate remaining transmitter runtime in hours:minutes.

Alkaline Batteries: Up to 9 Hours of Runtime

Battery Indicator	Approximate Runtime Remaining (hours:minutes)
	9:30 to 7:30
	7:30 to 5:30
	5:30 to 3:30
	3:30 to 2:30
	2:30 to 1:30
	< 0:30

NiMH Batteries: Up to 10 Hours of Runtime

Battery Indicator	Approximate Runtime Remaining (hours:minutes)
	10:00 to 8:00
	8:00 to 6:00
	6:00 to 4:00
	4:00 to 2:00
	2:00 to 0:20
	0:20 to 0:00

Lithium Primary Batteries: Up to 16 Hours of Runtime

Battery Indicator	Approximate Runtime Remaining (hours:minutes)
	16:00 to 12:45
	12:45 to 9:30
	9:30 to 6:30
	6:30 to 3:15
	3:15 to 0:20
	0:20 to 0:00

Main Menu Parameters

The **Main Menu** organizes the available transmitter parameters into three categories:

- **Radio**
- **Audio**
- **Utilities**

To change a parameter, press the **enter** button to enable editing and use the arrow buttons to change values or settings. When finished, press **enter** to save.

Radio Menu

Group and Channel

Press the enter button to enable editing of a group (**G:**) or channel (**C:**). Use the arrow buttons to adjust the values.

Frequency

Press the enter button once to edit the first 3 digits, or twice to edit the second 3 digits.

RF Power

Higher power settings can extend the range of the transmitter.

RF Output

- On: RF signal is active
- Mute: RF signal is inactive

Audio Menu

MicOfs

Adjust Mic Offset level to balance mic levels when using two bodypacks for frequency diversity.

Pad

Adjust the pad to avoid overloading the audio input.

PolarityPos

Selectable polarity assignment for LEMO connector transmitters:

- **Pos:** Positive pressure on microphone diaphragm produces positive voltage on pin 2 (with respect to pin 3 of XLR output) and the tip of the TRS output.
- **Neg:** Positive pressure on microphone diaphragm produces negative voltage on pin 2 (with respect to pin 3 of XLR output) and the tip of the TRS output.

MuteMode

When enabled, the power switch is configured as a mute switch for the audio:

- Power switch on: audio signal on
- Power switch off: audio signal muted

Tone

Transmitter will generate a continuous test tone. The tone can be set to 400 Hz or 1000 Hz.

Level

When enabled, allows for adjustment of the output level of the test tone.

Utilities Menu

Device ID

Assign a device ID of up to 9 letters or numbers.

Lock

Locks the transmitter controls and power switch.

Drop Mark

When enabled, press the enter button to drop a marker in Wireless Workbench or Shure ChannelsPlus.

Versions

Displays transmitter information:

- **FW:** Installed firmware
- **HW:** Hardware version
- **SN:** Serial number

Batt Info

Displays battery information:

- **Time:** Battery runtime
- **Health:** Percentage of current battery health
- **Charge:** Percentage of change
- **Cycles:** Record of the number of charging cycles for the installed battery
- **Temp:** Battery temperature in Fahrenheit and Celsius
- **mAh:** Remaining mAh for the installed battery

Reset All

Restores all transmitter parameters to factory settings.

Tips for Editing Menu Parameters

- To access the menu options from the home screen, press the **menu** button. Each additional press of the **menu** button advances to the next menu screen.
- A menu parameter will blink when editing is enabled
- To increase, decrease or change a parameter, use the arrow buttons
- To save a menu change, press **enter**
- To exit a menu without saving a change, press **menu**

DRAFT 9.1.16

RF Mute

RF Mute prevents transmission of the audio by suppressing the RF signal, while allowing the transmitter to remain powered-on. The message RF Mute is shown on the home screen.

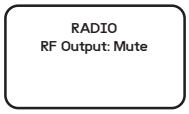

1. From the **Radio** menu, navigate to **RF Output**.
2. Choose one of the following options:
   - **On**: RF signal is active
   - **Mute**: RF signal is disabled
3. Press **enter** to save.

Turning the transmitter off and on, or replacing the battery will restore **RF Output** to **On**.

Power-on RF Mute

Power-on RF Mute places the transmitter in RF Mute mode immediately when turned on.

- Starting with the transmitter off, press and hold the **exit** button, and then switch on the power
- Continue to hold the **exit** button until the **RF Muted** message appears on the home screen

Tx Overload

The Tx Overload message is displayed when the audio input of the transmitter experiences an overload.

Scan and Sync

Use this procedure to tune a receiver and transmitter to the best open channel.

Important! Before you begin:

Turn off all transmitters for the systems you are setting up. (This prevents them from interfering with the frequency scan.)

Turn on the following potential sources of interference so they are operating as they would be during the presentation or performance (the scan will detect and avoid any interference they generate).

- Other wireless systems or devices
- Computers
- CD players
- Large LED panels
- Effects processors

1. Press the channel number button to select a receiver channel.
2. Power on the transmitter.
3. Press the **sync** button on the receiver.
4. Align the IR windows until the receiver IR port illuminates red.

Note: When complete, **SyncSuccess!** appears. The transmitter and receiver are now tuned to the same frequency.

Linking Two Transmitters to a Receiver

Linking two transmitters to a receiver offers the flexibility to provide a performer with either a handheld or bodypack transmitter to meet their preference. For performances requiring instrument changes, two bodypack transmitters can be linked to a single receiver.

Note: Only turn on and operate one transmitter at a time to prevent interference between the transmitters.

Syncing the Transmitters to the Receiver

Both transmitters must be individually linked to the receiver by performing an IR Sync.

1. Turn on the first transmitter and perform an IR Sync with the receiver.
2. Perform a sound check and adjust the transmitter gain if necessary. When finished, turn off the transmitter.
3. Turn on the second transmitter and perform an IR Sync with the receiver.
4. Test the transmitter at performance conditions and adjust the transmitter gain if necessary. When finished, turn off the transmitter.

Matching Audio Levels with Mic Offset

When linking two transmitters to a receiver, there may be a difference in volume levels between microphones or instruments. If this occurs, use the **MicOfs** function to match the audio levels and eliminate audible volume differences between transmitters. If using a single transmitter, set **MicOfs** to 0 dB.

1. Turn on the first transmitter and perform a sound check to test the audio level. Turn off the transmitter when finished.
2. Turn on the second transmitter and perform a sound check to test the audio level.
3. If there is an audible difference in the sound level between the transmitters, navigate to the **MicOfs** menu on the transmitter to increase or decrease the Mic Offset in realtime to match the audio levels.

DRAFT 9.1.16

Updating Firmware

Firmware is embedded software in each component that controls functionality. Periodically, new versions of firmware are developed to incorporate additional features and enhancements. To take advantage of design improvements, new versions of the firmware can be uploaded and installed using the Firmware Update Manager tool available in Shure's Wireless Workbench® 6 (WWB6) software. Software is available for download from http://www.shure.com/wwb.

Firmware Versioning

When updating receiver firmware, update transmitters to the same firmware version to ensure consistent operation.

The firmware of all ULX-D devices has the form of MAJOR.MINOR.PATCH (e.g., 1.2.14). At a minimum, all devices on the network (including transmitters), must have the same MAJOR and MINOR firmware version numbers (e.g., 1.2.x).

Updating the Transmitter

1. To upload the firmware to the transmitter, go to **`Device Configuration`** > **`Tx Firmware Update`** on the receiver.
2. Place the transmitter on its side and align the IR ports.
3. Press **`ENTER`** on the receiver to begin the download to the transmitter. IR ports must be aligned for the entire download, which can take 50 seconds or longer.

Specifications

AD1 Bodypack Transmitter

RF Carrier Frequency Range

470–814 MHz

Note: varies by region

Working Range

Under typical conditions	150 m (500 ft)
Line of Sight, outdoors for a single system	500 m (1600 ft)

Note: Actual range depends on RF signal absorption, reflection and interference.

Audio Frequency Response

40 Hz – 18 kHz (+1, -3 dB)

Note: Dependent on microphone type

RF Tuning Step Size

25 kHz

Modulation

45 kHz max. deviation

FM, Audio Reference Companding with pre- and de-emphasis

Signal-to-Noise Ratio

A-weighted, 1% THD, referenced at 0 dB setting on transmitter

>113 dB

Total Harmonic Distortion

45 kHz max. deviation

<0.3%, A-weighted, typical

System Audio Polarity

Positive pressure on microphone diaphragm (or positive voltage applied to tip of WA302 phone plug) produces positive voltage on pin 2 (with respect to pin 3 of low-impedance output) and the tip of the high impedance 1/4-inch output.

Gain Adjustment Range

-10 to +40 dB (in 1 dB steps)

Battery Type

Shure AXT910 (Rechargeable Li-Ion)

Battery Life

Up to 8 hours (low power mode)

Dimensions

77 mm x 66 mm x 17 mm (3.0 in. x 2.6 in. x 0.7 in.) H x W x D, XXXXERROR: [[with SB900 battery]] DOES NOT EXISTXXXX

Weight

146.6 g (5.2 oz.), with batteries

Housing

Cast aluminum

Operating Temperature Range

-18°C (0°F) to 63°C (145°F)

Note: Battery characteristics may limit this range.

Storage Temperature Range

-29°C (-20°F) to 74°C (165°F)

Note: Battery characteristics may limit this range.

Audio Input

Connector

4-Pin male mini connector (TA4M) / 3-Pin male mini connector (LEMO)

Configuration

Unbalanced

Impedance

1 MΩ

Maximum Input Level

1 kHz at 1% THD

Input Gain Setting	–10 to +9 dB	12.5 dBu
	+10 to +19 dB	–2.5 dBu
	+20 to +40 dB	–7.5 dBu

RF Output

Connector

SMA (UHF and ShowLink); Shell=Ground, Center=Signal

Antenna Type

AXT642 Bodypack Dual Band Antenna (integrated helical and 1/4 wave)

Power

See Frequency Range and Output Power table

Impedance

50 Ω

DRAFT 9.1.16

Frequency Bands and Transmitter RF Power

Band	Frequency Range (MHz)	RF Power (mW)
G1	470 to 530	10/100
G1E	470 to 530	10/50
G7C	470 to 510	10/50
G12	479 to 530	10/20
G19	470 to 530	2/10
H4	518 to 578	10/100
H4E	518 to 578	10/50
H12	518 to 565	10/20
H18	518 to 578	2/10
J5	578 to 638	10/100
J5E	578 to 638	10/50
J5HK	578 to 638	10
J12	578 to 638	2/10
K4E	606 to 666	10/50
L3	638 to 698	10/100
L3E	638 to 698	10/50
L20	638 to 698	2/10
M8	666 to 730	10/50
MA24	779 to 806	10
MJBX	806 to 810	10
P8	710 to 790	10/50
P9	710 to 787	10/50
Q5	740 to 814	10/50
R16	794 to 806	10/50

DRAFT 9.1.16

Input Connector Diagrams

TA4M

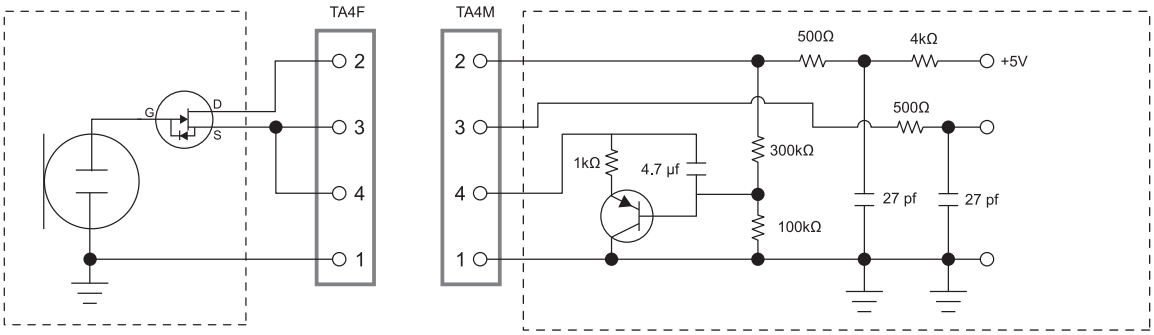

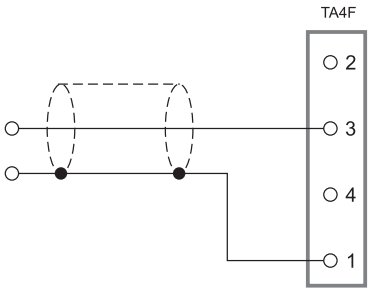

LEMO

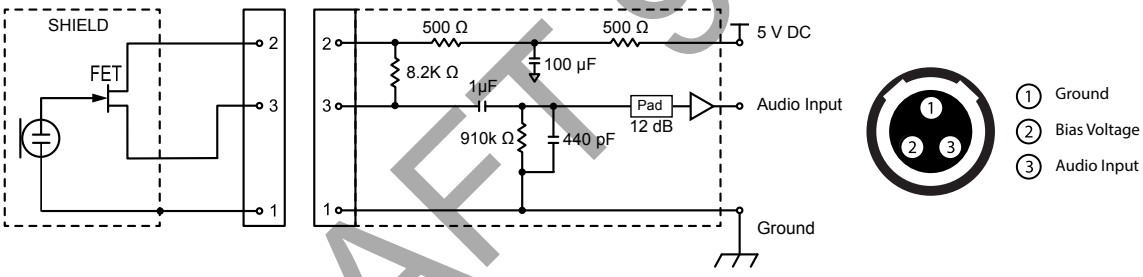

DRAFT 9.1.16

Certifications

Meets essential requirements of the following European Directives:

- R&TTE Directive 99/5/EC
- WEEE Directive 2002/96/EC, as amended by 2008/34/EC
- RoHS Directive 2002/95/EC, as amended by 2008/35/EC

  Note: Please follow your regional recycling scheme for batteries and electronic waste

Meets requirements of the following standards: EN 300 328, EN 300 422 Parts 1 and 2, EN 301 489 Parts 1 and 9, EN60065.

Certified under FCC Part 15 and FCC Part 74.

Certified in Canada by IC to RSS-123 and RSS-210.

Industry Canada ICES-003 Compliance Label: CAN ICES-3 (B)/NMB-3(B)

This radio transmitter has been approved by Industry Canada to operate with the antenna types listed below with the maximum permissible gain and required antenna impedance for each antenna type indicated. Antenna types not included in this list, having a gain greater than the maximum gain indicated for that type, are strictly prohibited for use with this device.

FCC ID: DD4AD1A, DD4AD1B, DD4AD1C, DD4AD1D. **IC:** 616A-AD1A, 616A-AD1C, 616A-AD1D.

This device complies with Industry Canada licence-exempt RSS standard(s). Operation of this device is subject to the following two conditions: (1) this device may not cause interference, and (2) this device must accept any interference, including interference that may cause undesired operation of the device. Le présent appareil est conforme aux CNR d'Industrie Canada applicables aux appareils radio exempts de licence. L'exploitation est autorisée aux deux conditions suivantes : (1) l'appareil ne doit pas produire de brouillage, et (2) l'utilisateur de l'appareil doit accepter tout brouillage radioélectrique subi, même si le brouillage est susceptible d'en compromettre le fonctionnement.

The CE Declaration of Conformity can be obtained from Shure Incorporated or any of its European representatives. For contact information please visit www.shure.com

The CE Declaration of Conformity can be obtained from: www.shure.com/europe/compliance

Authorized European representative:
Shure Europe GmbH
Headquarters Europe, Middle East & Africa
Department: EMEA Approval
Jakob-Dieffenbacher-Str. 12
75031 Eppingen, Germany
Phone: 49-7262-92 49 0
Fax: 49-7262-92 49 11 4
Email: info@shure.de

LICENSING INFORMATION

Licensing: A ministerial license to operate this equipment may be required in certain areas. Consult your national authority for possible requirements. Changes or modifications not expressly approved by Shure Incorporated could void your authority to operate the equipment. Licensing of Shure wireless microphone equipment is the user's responsibility, and licensability depends on the user's classification and application, and on the selected frequency. Shure strongly urges the user to contact the appropriate telecommunications authority concerning proper licensing, and before choosing and ordering frequencies.

Information to the user

This equipment has been tested and found to comply with the limits for a Class B digital device, pursuant to Part 15 of the FCC Rules. These limits are designed to provide reasonable protection against harmful interference in a residential installation. This equipment generates uses and can radiate radio frequency energy and, if not installed and used in accordance with the instructions, may cause harmful interference to radio communications. However, there is no guarantee that interference will not occur in a particular installation. If this equipment does cause harmful interference to radio or television reception, which can be determined by turning the equipment off and on, the user is encouraged to try to correct the interference by one or more of the following measures:

- Reorient or relocate the receiving antenna.
- Increase the separation between the equipment and the receiver.
- Connect the equipment to an outlet on a circuit different from that to which the receiver is connected.
- Consult the dealer or an experienced radio/TV technician for help.

Australia Warning for Wireless

This device operates under an ACMA class licence and must comply with all the conditions of that licence including operating frequencies. Before 31 December 2014, this device will comply if it is operated in the 520-820 MHz frequency band. **WARNING:** After 31 December 2014, in order to comply, this device must not be operated in the 694-820 MHz band.

AD1

Certified under FCC Part 74.

Certified by IC in Canada under RSS-123 and RSS-102.

IC: 616A-AD1 G50, 616A-AD1 H50, 616A-AD1 J50, 616A-AD1 L50; 616A-AD1.

FCC: DD4AD1G50, DD4AD1H50, DD4AD1J50, DD4AD1L50.

DRAFT 9.1.16