SHURE
LEGENDARY
PERFORMANCE™

AXIENT® DIGITAL

ADX2FD Axient Digital Handheld Transmitter

USER GUIDE

Le Guide de l'Utilisateur
Guia del Usuario
Manual do Usuário

DRAFT 6.9.18

© 2018 Shure Incorporated
27A36586 (Rev. 1)
Printed in U.S.A.

DRAFT 8.9.18

IMPORTANT SAFETY INSTRUCTIONS

1. READ these instructions.
2. KEEP these instructions.
3. HEED all warnings.
4. FOLLOW all instructions.
5. DO NOT use this apparatus near water.
6. CLEAN ONLY with dry cloth.
7. DO NOT block any ventilation openings. Allow sufficient distances for adequate ventilation and install in accordance with the manufacturer's instructions.
8. DO NOT install near any heat sources such as open flames, radiators, heat registers, stoves, or other apparatus (including amplifiers) that produce heat. Do not place any open flame sources on the product.
9. DO NOT defeat the safety purpose of the polarized or groundingtype plug. A polarized plug has two blades with one wider than the other. A grounding type plug has two blades and a third grounding prong. The wider blade or the third prong are provided for your safety. If the provided plug does not fit into your outlet, consult an electrician for replacement of the obsolete outlet.
10. PROTECT the power cord from being walked on or pinched, particularly at plugs, convenience receptacles, and the point where they exit from the apparatus.
11. ONLY USE attachments/accessories specified by the manufacturer.
12. USE only with a cart, stand, tripod, bracket, or table specified by the manufacturer, or sold with the apparatus. When a cart is used, use caution when moving the cart/apparatus combination to avoid injury from tip-over.
13. UNPLUG this apparatus during lightning storms or when unused for long periods of time.
14. REFER all servicing to qualified service personnel. Servicing is required when the apparatus has been damaged in any way, such as power supply cord or plug is damaged, liquid has been spilled or objects have fallen into the apparatus, the apparatus has been exposed to rain or moisture, does not operate normally, or has been dropped.
15. DO NOT expose the apparatus to dripping and splashing. DO NOT put objects filled with liquids, such as vases, on the apparatus.
16. The MAINS plug or an appliance coupler shall remain readily operable.
17. The airborne noise of the Apparatus does not exceed 70dB (A).
18. Apparatus with CLASS I construction shall be connected to a MAINS socket outlet with a protective earthing connection.
19. To reduce the risk of fire or electric shock, do not expose this apparatus to rain or moisture.
20. Do not attempt to modify this product. Doing so could result in personal injury and/or product failure.
21. Operate this product within its specified operating temperature range.

This symbol indicates that dangerous voltage constituting a risk of electric shock is present within this unit.

This symbol indicates that there are important operating and maintenance instructions in the literature accompanying this unit.

WARNING: This product contains a chemical known to the State of California to cause cancer and birth defects or other reproductive harm.

DRAFT 9.9.18

CONSIGNES DE SÉCURITÉ IMPORTANTES

1. LIRE ces consignes.
2. CONSERVER ces consignes.
3. OBSERVER tous les avertissements.
4. SUIVRE toutes les consignes.
5. NE PAS utiliser cet appareil à proximité de l'eau.
6. NETTOYER UNIQUEMENT avec un chiffon sec.
7. NE PAS obstruer les ouvertures de ventilation. Laisser des distances suffisantes pour permettre une ventilation adéquate et effectuer l'installation en respectant les instructions du fabricant.
8. NE PAS installer à proximité d'une source de chaleur telle qu'une flamme nue, un radiateur, une bouche de chaleur, un poêle ou d'autres appareils (dont les amplificateurs) produisant de la chaleur. Ne placer aucune source à flamme nue sur le produit.
9. NE PAS détériorer la sécurité de la fiche polarisée ou de la fiche de terre. Une fiche polarisée comporte deux lames dont l'une est plus large que l'autre. Une fiche de terre comporte deux lames et une troisième broche de mise à la terre. La lame la plus large ou la troisième broche assure la sécurité de l'utilisateur. Si la fiche fournie ne s'adapte pas à la prise électrique, demander à un électricien de remplacer la prise hors normes.
10. PROTÉGER le cordon d'alimentation afin que personne ne marche dessus et que rien ne le pince, en particulier au niveau des fiches, des prises de courant et du point de sortie de l'appareil.
11. UTILISER UNIQUEMENT les accessoires spécifiés par le fabricant.
12. UTILISER uniquement avec un chariot, un pied, un trépied, un support ou une table spécifié par le fabricant ou vendu avec l'appareil. Si un chariot est utilisé, déplacer l'ensemble chariot-appareil avec précaution afin de ne pas le renverser, ce qui pourrait entraîner des blessures.
13. DÉBRANCHER l'appareil pendant les orages ou quand il ne sera pas utilisé pendant longtemps.
14. CONFIER toute réparation à du personnel qualifié. Des réparations sont nécessaires si l'appareil est endommagé d'une façon quelconque, par exemple : cordon ou prise d'alimentation endommagé, liquide renversé ou objet tombé à l'intérieur de l'appareil, exposition de l'appareil à la pluie ou à l'humidité, appareil qui ne marche pas normalement ou que l'on a fait tomber.
15. NE PAS exposer cet appareil aux égouttures et aux éclaboussements. NE PAS poser des objets contenant de l'eau, comme des vases, sur l'appareil.
16. La prise SECTEUR ou un coupleur d'appareil électrique doit rester facilement utilisable.
17. Le bruit aérien de l'appareil ne dépasse pas 70 dB (A).
18. L'appareil de construction de CLASSE I doit être raccordé à une prise SECTEUR dotée d'une protection par mise à la terre.
19. Pour réduire les risques d'incendie ou de choc électrique, ne pas exposer cet appareil à la pluie ou à l'humidité.
20. Ne pas essayer de modifier ce produit. Cela risque de causer des blessures et/ou la défaillance du produit.
21. Utiliser ce produit dans sa plage de températures de fonctionnement spécifiée.

Ce symbole indique la présence d'une tension dangereuse dans l'appareil constituant un risque de choc électrique.

Ce symbole indique que la documentation fournie avec l'appareil contient des instructions d'utilisation et d'entretien importantes.

INSTRUCCIONES IMPORTANTES DE SEGURIDAD

1. LEA estas instrucciones.
2. CONSERVE estas instrucciones.
3. PRESTE ATENCION a todas las advertencias.
4. SIGA todas las instrucciones.
5. NO utilice este aparato cerca del agua.
6. LIMPIE UNICAMENTE con un trapo seco.
7. NO obstruya ninguna de las aberturas de ventilación. Deje espacio suficiente para proporcionar ventilación adecuada e instale los equipos según las instrucciones del fabricante.
8. NO instale el aparato cerca de fuentes de calor tales como llamas descubiertas, radiadores, registros de calefacción, estufas u otros aparatos (incluyendo amplificadores) que produzcan calor. No coloque artículos con llamas descubiertas en el producto.
9. NO anule la función de seguridad del enchufe polarizado o con clavija de puesta a tierra. Un enchufe polarizado tiene dos patas, una más ancha que la otra. Un enchufe con puesta a tierra tiene dos patas y una tercera clavija con puesta a tierra. La pata más ancha o la tercera clavija se proporciona para su seguridad. Si el tomacorriente no es del tipo apropiado para el enchufe, consulte a un electricista para que sustituya el tomacorriente de estilo anticuado.
10. PROTEJA el cable eléctrico para evitar que personas lo pisen o estrujen, particularmente en sus enchufes, en los tomacorrientes y en el punto en el cual sale del aparato.
11. UTILICE únicamente los accesorios especificados por el fabricante.
12. UTILICE únicamente con un carro, pedestal, trípode, escuadra o mesa del tipo especificado por el fabricante o vendido con el aparato. Si se usa un carro, el mismo debe moverse con sumo cuidado para evitar que se vuelque con el aparato.

13. DESENCHUFE el aparato durante las tormentas eléctricas, o si no va a ser utilizado por un lapso prolongado.
14. TODA reparación debe ser llevada a cabo por técnicos calificados. El aparato requiere reparación si ha sufrido cualquier tipo de daño, incluyendo los daños al cordón o enchufe eléctrico, si se derrama líquido sobre el aparato o si caen objetos en su interior, si ha sido expuesto a la lluvia o la humedad, si no funciona de modo normal, o si se ha caído.
15. NO exponga este aparato a chorros o salpicaduras de líquidos. NO coloque objetos llenos con líquido, tales como floreros, sobre el aparato.
16. El enchufe de alimentación o un acoplador para otros aparatos deberá permanecer en buenas condiciones de funcionamiento.
17. El nivel de ruido transmitido por el aire del aparato no excede de 70 dB(A).
18. Los aparatos de fabricación CLASE I deberán conectarse a un tomacorriente de ALIMENTACION con clavija de puesta a tierra protectora.
19. Para reducir el riesgo de causar un incendio o sacudidas eléctricas, no exponga este aparato a la lluvia ni a humedad.
20. No intente modificar este producto. Hacerlo podría causar lesiones personales y/o la falla del producto.
21. Utilice este producto únicamente dentro de la gama de temperaturas de funcionamiento especificadas.

Este símbolo indica que la unidad contiene niveles de voltaje peligrosos que representan un riesgo de choques eléctricos.

Este símbolo indica que la literatura que acompaña a esta unidad contiene instrucciones importantes de funcionamiento y mantenimiento.

DRAFT 09.18

IMPORTANTES INSTRUÇÕES DE SEGURANÇA

1. LEIA estas instruções.
2. GUARDE estas instruções.
3. PRESTE ATENÇÃO a todas as instruções.
4. SIGA todas as instruções.
5. NÃO use este aparelho perto de água.
6. LIMPE SOMENTE com um pano seco.
7. NÃO bloqueie nenhuma das aberturas de ventilação. Deixe distâncias suficientes para ventilação adequada e instale de acordo com as instruções do fabricante.
8. NÃO instale próximo de nenhuma fonte de calor, tais como fogo aceso, radiadores, bocais de aquecimento, fornos ou outros aparelhos que produzam calor (inclusive amplificadores). Não coloque fontes de chamas sobre o produto.
9. NÃO inutilize as características de segurança do conector polarizado ou com pino de aterramento. Um conector polarizado possui duas lâminas com uma mais larga do que a outra. Um conector com pino de aterramento possui duas lâminas e um terceiro pino de aterramento. É fornecida uma lâmina mais larga ou o terceiro pino para a sua segurança. Se por acaso o conector não se encaixar na tomada, chame um eletricista para substituir a tomada obsoleta.
10. PROTEJA o cabo de alimentação, evitando que seja pisado ou que enrosque, especialmente nos conectores, nas tomadas elétricas de emprego geral e no ponto onde elas saem do aparelho.
11. USE SOMENTE acessórios/apetrechos especificados pelo fabricante.
12. USE somente com um carrinho, pedestal, tripé, suporte ou mesa especificados pelo fabricante ou vendidos com o aparelho. Quando utilizar um carrinho, tenha cuidado ao movimentar o conjunto aparelho/carrinho para evitar danos com a queda do mesmo.

13. DESLIGUE este aparelho da tomada elétrica durante tempestades com relâmpagos ou quando não seja utilizado por longo período.
14. DEIXE toda a manutenção sob a responsabilidade de uma equipe de manutenção qualificada. É necessário realizar a manutenção quando por algum motivo o aparelho tiver sido danificado de alguma forma, como por exemplo por dano do cabo de alimentação elétrica ou do seu conector, por derramamento de líquido ou queda de objetos no aparelho, se o aparelho tiver sido exposto à chuva ou à umidade, não esteja operando normalmente ou tenha sofrido queda.
15. NÃO exponha o aparelho a respingos ou goteiras. NÃO coloque objetos cheios de líquidos, tais como vasos, sobre o aparelho.
16. O plugue MAINS (rede elétrica) ou um acoplador de aparelho deve estar sempre pronto para operação.
17. O ruído aéreo do Aparelho não ultrapassa 70 dB (A).
18. O aparelho com construção CLASSE I deve estar conectado à tomada da rede elétrica com ligação à terra.
19. Para reduzir o risco de incêndio ou choque elétrico, não exponha este aparelho à chuva ou umidade.
20. Não tente alterar este produto. Isso poderá resultar em lesão pessoal e/ou falha do produto.
21. Opere este produto dentro da faixa de temperatura de operação especificada.

Este símbolo indica que existe nesta unidade tensão perigosa que apresenta risco de choque elétrico.

Este símbolo indica que existem instruções operação e manutenção importantes na literatura que acompanha esta unidade.

WARNING

- Battery packs may explode or release toxic materials. Risk of fire or burns. Do not open, crush, modify, disassemble, heat above 140°F (60°C), or incinerate.
- Follow instructions from manufacturer
- Only use Shure charger to recharge Shure rechargeable batteries
- WARNING: Danger of explosion if battery incorrectly replaced. Replace only with same or equivalent type.
- Never put batteries in mouth. If swallowed, contact your physician or local poison control center
- Do not short circuit; may cause burns or catch fire
- Do not charge or use battery packs other than Shure rechargeable batteries
- Dispose of battery packs properly. Check with local vendor for proper disposal of used battery packs.
- Batteries (battery pack or batteries installed) shall not be exposed to excessive heat such as sunshine, fire or the like

Note: Use only with the included power supply or a Shure-approved equivalent.

Please follow your regional recycling scheme for batteries, packaging, and electronic waste.

WARNING: This product contains a chemical known to the State of California to cause cancer and birth defects or other reproductive harm.

低功率電波輻射性電機管理辦法

第十二條

經型式認證合格之低功率射頻電機，非經許可，公司、商號或使用者均不得擅自變更頻率、加大功率或變更原設計之特性及功能。 第十四條

低功率射頻電機之使用不得影響飛航安全及干擾合法通信；經發現有干擾現象時，應立即停用，並改善至無干擾時方得繼續使用。前項合法通信，指依電信法規定作業之無線電通信。低功率射頻電機須忍受合法通信或工業、科學及醫療用電波輻射性電機設備之干擾。

DRAFT 8.9.19

AVERTISSEMENT

- Les accus risquent d’exploser ou d’émettre des matières toxiques. Risque d’incendie ou de brûlures. Ne pas ouvrir, écraser, altérer, démonter, chauffer au-dessus de 60 °C (140 °F) ou incinérer.
- Suivre les instructions du fabricant
- Utiliser uniquement un chargeur Shure pour recharger les accus rechargeables Shure
- AVERTISSEMENT : Danger d’explosion si l’accu est mal placé. Remplacer uniquement avec le même type ou un type équivalent.
- Ne jamais mettre les accus dans la bouche. En cas d’ingestion, contacter un médecin ou le centre anti-poison local
- Ne pas court-circuiter ; cela risque de causer des brûlures ou un incendie
- Ne pas charger ou utiliser des accus autres que les accus rechargeables Shure
- Mettre les accus au rebut de manière appropriée. Vérifier auprès du fournisseur local la manière appropriée de mettre au rebut les accus usagés.
- Les accus (bloc accu ou accus installés) ne doivent pas être exposés à une chaleur excessive, p. ex. lumière du soleil, feu ou similaire

Remarque : Utiliser exclusivement avec le bloc d’alimentation inclus ou un produit équivalent approuvé par Shure.

Suivre le plan de recyclage régional en vigueur pour les accus, l’emballage et les déchets électroniques.

AVERTISSEMENT : Ce produit contient un produit chimique reconnu par l’État de Californie comme pouvant entraîner le cancer, des malformations congénitales ou d’autres troubles de l’appareil reproducteur.

低功率電波輻射性電機管理辦法

第十二條

經型式認證合格之低功率射頻電機，非經許可，公司、商號或使用者均不得擅自變更頻率、加大功率或變更原設計之特性及功能。 第十四條

低功率射頻電機之使用不得影響飛航安全及干擾合法通信；經發現有干擾現象時，應立即停用，並改善至無干擾時方得繼續使用。前項合法通信，指依電信法規定作業之無線電通信。低功率射頻電機須忍受合法通信或工業、科學及醫療用電波輻射性電機設備之干擾。

ADVERTENCIA

- Los conjuntos de baterías pueden estallar o soltar materiales tóxicos. Riesgo de incendio o quemaduras. No abra, triture, modifique, desarme, caliente a más de 60°C (140°F) ni incinere.
- Siga las instrucciones del fabricante
- Utilice únicamente el cargador Shure para cargar las baterías recargables Shure.
- ADVERTENCIA: Si se sustituye la batería incorrectamente, se crea el riesgo de causar una explosión. Sustitúyala únicamente por otra igual o de tipo equivalente.
- Nunca ponga baterías en la boca. Si se tragan, acuda al médico o a un centro local de control de envenenamiento
- No ponga en cortocircuito; esto puede causar quemaduras o incendios
- No cargue ni utilice baterías diferentes de las baterías recargables Shure.
- Deseche los conjuntos de baterías de forma apropiada. Consulte al vendedor local para el desecho adecuado de conjuntos de baterías usados.
- Las baterías (conjuntos de baterías o baterías instaladas) no deben exponerse al calor excesivo causado por la luz del sol, las llamas o condiciones similares.

Nota: Use solo con la fuente de alimentación incluida o una equivalente aprobada por Shure.

Se recomienda respetar las normas de reciclado de la región relativas a desechos electrónicos, empaquetado y baterías.

ADVERTENCIA: Este producto contiene una sustancia química conocida en el Estado de California como causante del cáncer y de defectos congénitos y otros tipos de toxicidad reproductiva.

低功率電波輻射性電機管理辦法

第十二條

經型式認證合格之低功率射頻電機，非經許可，公司、商號或使用者均不得擅自變更頻率、加大功率或變更原設計之特性及功能。 第十四條

低功率射頻電機之使用不得影響飛航安全及干擾合法通信；經發現有干擾現象時，應立即停用，並改善至無干擾時方得繼續使用。前項合法通信，指依電信法規定作業之無線電通信。低功率射頻電機須忍受合法通信或工業、科學及醫療用電波輻射性電機設備之干擾。

DRAFT 8.9.18

ATENÇÃO

- Baterias podem explodir ou liberar materiais tóxicos. Risco de incêndio ou queimaduras. Não abra, esmague, modifique, desmonte, aqueça acima de 60 °C (140 °F) ou incinere.
- Siga as instruções do fabricante
- Use somente carregador Shure para recarregar baterias Shure recarregáveis
- ATENÇÃO: Perigo de explosão se a bateria for substituída incorretamente. Substitua somente pelo mesmo tipo ou por um equivalente.
- Nunca ponha baterias na boca. Se engolida, procure um médico ou centro local de controle de veneno
- Não provoque curto-circuito; isto pode causar queimaduras ou incêndios
- Não carregue nem use baterias que não sejam baterias recarregáveis Shure
- Descarte as baterias apropriadamente. Verifique com o fornecedor local a forma correta de descarte de baterias usadas.
- Baterias (a embalagem ou as baterias instaladas) não devem ser expostas a calor excessivo como luz do sol, fogo etc.

Observação: Use somente com a fonte de alimentação inclusa ou uma equivalente aprovada pela Shure.

Siga o esquema de reciclagem de sua região para baterias, embalagem e resíduos eletrônicos.

ATENÇÃO: De acordo com o Estado da Califórnia, este produto contém um produto químico que causa câncer e defeitos de nascimento ou outros danos reprodutivos.

低功率電波輻射性電機管理辦法

第十二條

經型式認證合格之低功率射頻電機，非經許可，公司、商號或使用者均不得擅自變更頻率、加大功率或變更原設計之特性及功能。 第十四條

低功率射頻電機之使用不得影響飛航安全及干擾合法通信；經發現有干擾現象時，應立即停用，並改善至無干擾時方得繼續使用。前項合法通信，指依電信法規定作業之無線電通信。低功率射頻電機須忍受合法通信或工業、科學及醫療用電波輻射性電機設備之干擾。

ADXFD2 Handheld Transmitter

ADX series transmitters deliver impeccable audio quality and RF performance, and are equipped with ShowLink® remote control for real-time parameter adjustments and interference avoidance. This transmitter additionally features Frequency Diversity for seamless audio in even the most challenging environments. Lightweight aluminum construction, SB920 rechargeable power options (with dockable charging).

Features

Performance

- 184 MHz tuning range
- Frequency Diversity enables simultaneous transmission on two independent frequencies to ensure seamless, uninterrupted audio for mission-critical applications. Single carrier mode is available if Frequency Diversity is not required.
- 20 Hz to 20 kHz range with flat frequency response
- Automatic input staging optimizes gain setting
- Diversity ShowLink-enabled for remote transmitter control and automatic interference avoidance
- AES 256-bit encryption-enabled for secure transmission
- >120 dB, A-weighted, System Gain @ +10
- Digital output: >125dB, A-weighted (Dante, AES3, AES67)
- 100 meter (300 feet) line-of-sight operating range
- Selectable modulation modes optimize performance for spectral efficiency or audio quality:
  - Standard – optimal coverage, low latency
  - High density – dramatic increase in max system channel count
- Switchable Power Levels (region dependent):
  - 2/10/50 mW (single carrier mode)
  - 2 x 20 mW (Frequency Diversity mode)
- Built-in tone generator and RF markers to facilitate range-testing

Design

- Interchangeable Shure microphone cartridges
- Backlit LCD with easy to navigate menu and controls
- Rugged metal construction
- Menu and power lockout

Power

- Shure SB920 rechargeable batteries offer precision metering and zero memory effect
- External charging contacts for docked charging
- Battery Runtime with Shure SB920:
  - Up to 9 hours in single carrier mode @ 10 mW
  - Up to 6.5 hours in Frequency Diversity mode @ 10 mW x 10 mW
  - Up to 5 hours in single carrier, high-power mode @ 50 mW

DRAFT 8.9.18

Included Components

SB920 Shure Rechargeable Battery (2)	95A25763
Zipper Bag	95B2313
Battery Contact Cover (part number varies by frequency range)	WA619-A (470-636 MHz), WA619-B (606-810 MHz), WA619-C (750-960 MHz)
Threaded Adapter	31B1856
Swivel Adapter, black	90F4046

Choice of (1) of the following Shure microphone cartridges:

SM58 (RPW112)
BETA 87C (RPW122)
BETA 58A (RPW 118)
KSM8 Black (RPW174)
KSM9HS Black (RPW186)
KSM9 Nickel (RPW188)
BETA 87A (RPW120)
KSM9 Black (RPW184)
KSM8 Nickel (RPW170)
KSM9HS Nickel (RPW190)

Optional Accessories

SB920 Shure Rechargeable Battery	95A25763
AD651B Talk Switch Button (black)	90A37347B
Microphone stand adapter	WA371
Shure Networked Docking Charger 2-Up	SBC240

Optional Shure microphone cartridges:

SM58 (RPW112)
SM86 (RPW114)
SM87A (RPW116)
BETA 58A (RPW118)
BETA 87A (RPW120)
BETA 87C (RPW122)
VP68 (RPW124)
KSM9 Nickel (RPW188)
KSM9HS Nickel (RPW190)
KSM9 Black (RPW184)
KSM9HS Black (RPW186)

ADX2FD Transmitter Overview

① **Microphone Cartridge**
See Optional Accessories for a list of compatible cartridges.

② **Display**
View menu screens and settings. Press any control button to activate the backlight.

③ **Infrared (IR) Port**
Align with the receiver IR port during an IR Sync for automated transmitter programming.

④ **Control Buttons**
Use to navigate through parameter menus and change values.

⑤ **Battery Compartment**
Requires Shure rechargeable battery.

⑥ **On/Off Switch**
Powers the unit on or off.

⑦ **Handle**
Unscrew to access controls and batteries.

⑧ **Battery Charging Contacts**
Charging contacts for use with docking battery chargers.

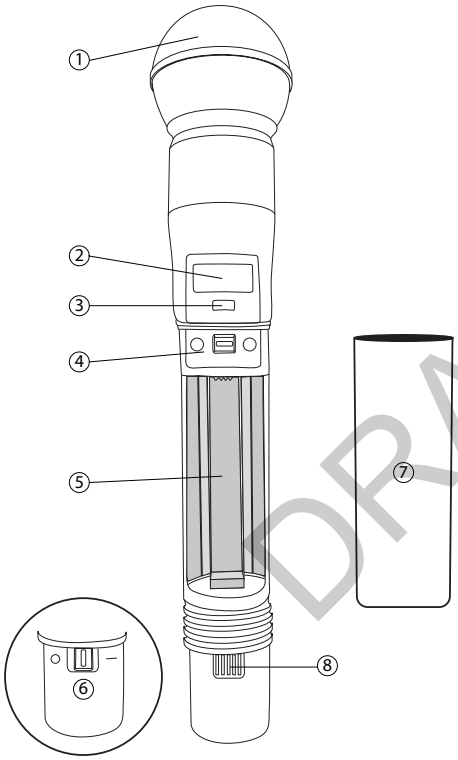

Transmitter Controls

Use to navigate through parameter menus and change values.

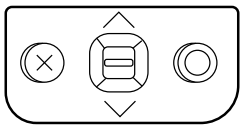

X	Exit: Acts as a 'back' button to return to previous menus or parameters without confirming a value change
O	Enter: Selects menu screens and confirms parameter changes
∨∧	Use to scroll through menu screens and to change parameter values

Tip: Use the following control shortcuts for quick set up:

- Hold the ∧ button while powering-on to lock or unlock the transmitter controls
- Hold the **X** button while powering-on to set the transmitter RF output to mute

Home Screen Display

The home screen shows transmitter information and status.

Tip: There are four options to choose the information shown on the home screen. Use the arrow buttons to select one of the following choices:

• Name • F1 and F2 Frequency Settings • F1 and F2 Group (G) and Channel (C) • Device ID	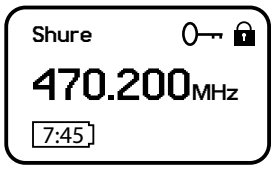

The following icons appear to indicate transmitter settings:

	Battery runtime in hours and minutes or bar display
	Key: Displayed when encryption is enabled
	Displayed when controls are locked. Icon will flash if access is attempted to a locked control (power or menu).
	ShowLink signal strength displays 0 to 5 bars
STD	STD: Standard Transmission Mode
HD	HD: High Density Transmission Mode
	Box: When the box has an "x", Mute Mode is on and engaged. If the box is empty, Mute Mode is on, but not engaged.

Locking the Interface

Lock transmitter interface controls to prevent accidental or unauthorized changes to parameters. The lock icon appears on the home screen when the interface lock is enabled.

1. From the **Utilities** menu, navigate to **Locks** and select one of the following lock options:
   - **None:** The controls are unlocked
   - **Power:** The power switch is locked
   - **Menu:** The menu parameters are locked
   - **All:** The power switch and menu parameters are locked
2. Press **O** to save.

Tip: To quickly unlock a transmitter: Press **O** twice, select **None**, and press **O**.

DRAFT 8.9.18

Shure Rechargeable Batteries

Shure lithium-ion batteries offer a rechargeable option for powering the transmitters. Batteries quickly charge to 50% capacity in one hour and reach full charge within three hours.

Single chargers and multiple bay chargers are available to recharge the Shure batteries.

Caution: Only charge Shure rechargeable batteries with a Shure battery charger.

Checking Battery Info

When using a Shure rechargeable battery, the receiver and transmitter home screens display the number of hours and minutes remaining.

Detailed information for the battery is displayed **`Battery`** menu of the transmitter: **`Utilities`** > **`Battery`**

- **`Battery:`** The chemistry type of for the installed battery (Shure, Alkaline, Lithium, NiMH)
- **`Bars:`** Indicates the number of bars displayed
- **`Time:`** Battery runtime
- **`Charge:`** Percentage of charge capacity
- **`Health:`** Percentage of current battery health
- **`CycleCount:`** Total of the number of charging cycles for the installed battery
- **`Temperature:`** Battery temperature reported in Celsius and Fahrenheit

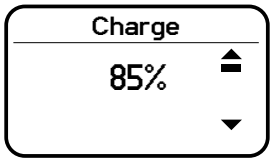

Installing the Battery Contact Cover

Use battery contact covers to prevent reflections from the battery contacts during broadcasts or live performances.

1. Remove the transmitter handle.
2. Pull gently on the antenna cover to remove. Install a battery contact cover in its place.
3. Reinstall the transmitter handle.

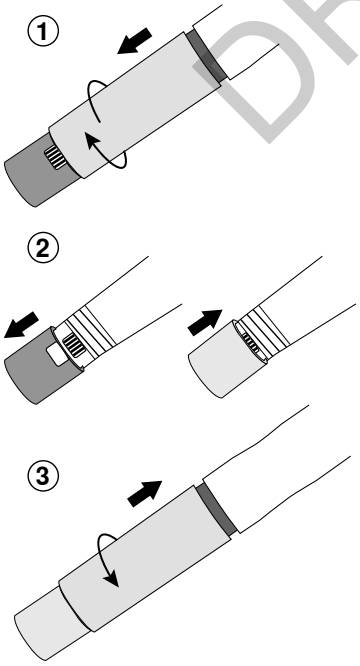

Battery Installation

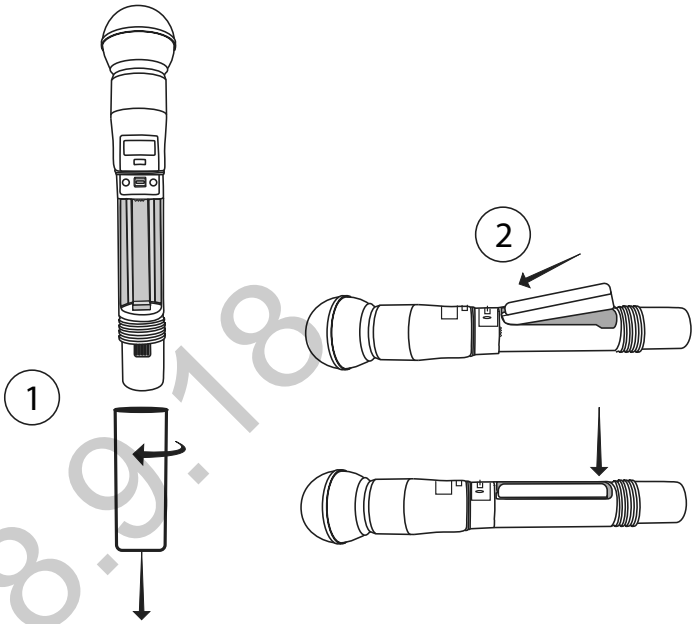

① **Accessing the Battery Compartment**
Unscrew and remove the handle as shown.

② **Inserting the Battery**
Insert the battery, contracts first into the battery compartment. Press down on the tab to fully seat the battery, and then reinstall the handle.

Tip: To remove the battery, pull up on the tab on the bottom of the battery.

ADX2FD SB920 Battery Runtime

Note: Higher RF power levels decrease battery runtime. Battery runtime varies with battery age and environmental conditions.

Signal Carrier Mode			Frequency Diversity Mode		
2 mW	10 mW	50 mW	2 mW x 2 mW	10 mW x 10 mW	20 mW x 20 mW
8.5 to 10.5 hours	7.5 to 9.5 hours	5.0 to 7.0 hours	5.5 to 7.5 hours	5.0 to 7.0 hours	4.5 to 6.5 hours

Important Tips for Care and Storage of Shure Rechargeable Batteries

Proper care and storage of Shure batteries results in reliable performance and ensures a long lifetime.

- Always store batteries and transmitters at room temperature
- Ideally, batteries should be charged to approximately 40% of capacity for long-term storage
- Periodically clean the battery contacts with alcohol to maintain ideal contact
- During storage, check batteries every 6 months and recharge to 40% of capacity as needed

For additional rechargeable battery information, visit www.shure.com.

DRAFT 8.9.18

Menu Parameters

The **Main** menu organizes the available transmitter parameters into three categories:

- **Radio**
- **Audio**
- **Utilities**

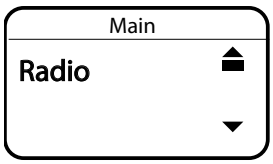

Tips for Editing Menu Parameters

- To access the menu options from the home screen, press **O** . Use the arrow buttons to access additional menus and parameters.
- A menu parameter will blink when editing is enabled
- To increase, decrease or change a parameter, use the arrow buttons
- To save a menu change, press **O**
- To exit a menu without saving a change, press **X**

Menu Map

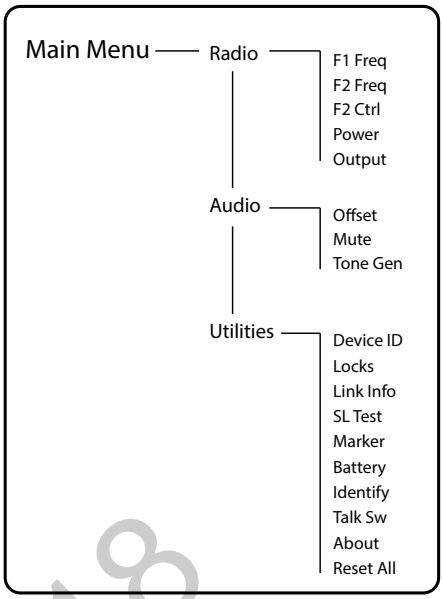

Menu Parameter Descriptions

Radio Menu

F1 Freq

Press the enter button to enable editing of a group (**G:**) channel (**C:**) or frequency (MHz). Use the arrow buttons to adjust the values. To edit the frequency, press the **O** button once to edit the first 3 digits, or twice to edit the second 3 digits.

F2 Freq

Press the enter button to enable editing of a group (**G:**) channel (**C:**) or frequency (MHz). Use the arrow buttons to adjust the values. To edit the frequency, press the **O** button once to edit the first 3 digits, or twice to edit the second 3 digits.

F2 Ctrl

Turns F2 (**F2 Freq**) **On** or **Off**.

Power

Higher power settings can extend the range of the transmitter.

Note: Higher RF power settings decrease battery runtime.

Output

- On: RF signal is active
- Mute: RF signal is inactive

Audio Menu

Offset

Adjust **Offset** level to balance mic levels when using two transmitters or when assigning multiple transmitters to receiver slots. Adjustment range: -12 dB to +21 dB.

Mute

When enabled, the power switch is configured as a mute switch for the audio:

- Power switch on: audio signal on
- Power switch off: audio signal muted

Tone Gen

Transmitter will generate a continuous test tone:

- **Freq**: The tone can be set to 400 Hz or 1000 Hz.
- **Level**: Allows for adjustment of the output level of the test tone.

Utilities Menu

Device ID

Assign a device ID of up to 9 letters or numbers.

Locks

Locks the transmitter controls and power switch.

- **None:** The controls are unlocked
- **Power:** The power switch is locked
- **Menu:** The menu parameters are locked
- **All:** The power switch and menu parameters are locked

Link Info

Displays the following information about the link between a transmitter and receiver:

- **Not Linked**: The transmitter is not linked to a receiver
- **Linked**: The transmitter is linked to a receiver. Select **Unlink?** to free the transmitter from the receiver link.
- **Unlinked**: The transmitter is not linked to a receiver

SL Test

ShowLink test tool to measure the boundaries of ShowLink coverage.

Marker

When enabled, press the enter button to drop a marker in Wireless Workbench.

Battery

Displays battery information:

- **Battery Life:** Runtime reported in bar display and time (hours:minutes)
- **Charge:** Percentage of charge capacity
- **Health:** Percentage of current battery health
- **Cycle Count:** Total of the number of charging cycles for the installed battery
- **Temperature:** Battery temperature reported in Celsius and Fahrenheit

Talk Sw

Press **ENTER** to add control from a talk switch. Press the button on the talk switch twice to complete the link.

Identify

When enabled, **Identify** flashes the transmitter icon in Wireless Workbench Inventory or Monitor tabs.

About

Displays the following transmitter information:

- **Model**: Displays the model number
- **Band**: Displays the tuning band of the transmitter
- **FW Version**: Installed firmware
- **HW Version**: Hardware version
- **Serial Num**: Serial number

Reset All

Restores all transmitter parameters to factory settings.

DRAFT 8.9.18

IR Sync

Use IR Sync to form an audio channel between the transmitter and receiver.

Note: The receiver band must match the band of the transmitter.

1. Select a receiver channel.
2. Tune the channel to an available frequency using group scan or manually turn to an open frequency.
3. Power on the transmitter.
4. Press the **SYNC** button on the receiver.
5. Align the IR windows between the transmitter and the receiver so that the IR LED illuminates red. When complete, **Sync Success!** appears. The transmitter and receiver are now tuned to the same frequency.

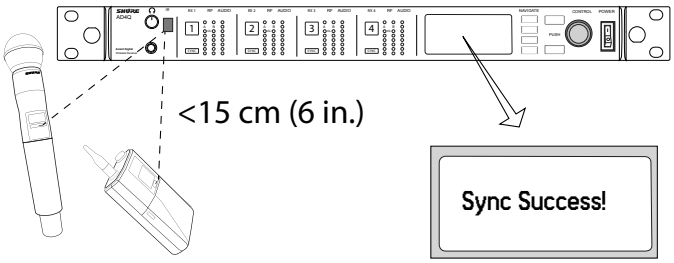

Note:

Any change to the encryption status on the receiver (enabling/disabling encryption) requires a sync to send the settings to the transmitter. New encryption keys for the transmitter and receiver channel are generated on every IR sync, so to request a new key for a transmitter, perform an IR sync with the desired receiver channel.

Setting the Frequency Manually

The transmitter can be manually tuned to a specific frequency, group, or channel.

1. Navigate to the **Radio** menu and select **F1 Freq** or **F2 Freq**.
2. Scroll to select G: and C: to edit the group and channel, or select the frequency parameter (MHz). When editing the frequency, press **O** one to enable editing of the first three digits, or twice to edit the last three digits.
3. Use the ∧∨ buttons to adjust the group, channel, or frequency.
4. Press **O** to save, and then press **X** when finished.

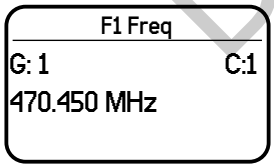

RF Mute

RF Mute prevents transmission of the audio by suppressing the RF signal, while allowing the transmitter to remain powered-on. The home screen displays **RF MUTED** in this mode.

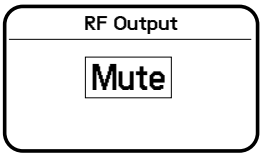

1. From the **Radio** menu, navigate to **Output**.
2. Choose one of the following options:
   - **On**: RF signal is active
   - **Mute**: RF signal is disabled
3. Press **O** to save.

Turning the transmitter off and on, or replacing the battery will restore **Output** to **On**.

Power-on RF Mute

Power-on RF Mute places the transmitter in RF Mute mode immediately when turned on.

- Starting with the transmitter off, press and hold the **X** button, and then switch on the power
- Continue to hold the **X** button until the **RF Muted** message appears on the home screen

Tip: To turn the RF Output on, navigate to **Radio** > **Output** and select **On**.

Operating in Frequency Diversity Mode

Operating the AXDFD2 in frequency diversity mode with an Axient Digital receiver enables simultaneous transmission of audio on 2 independent frequencies.

1. Select a channel and navigate to the Frequency Diversity setting: **Advanced** > **Frequency Diversity** .
2. Use the control wheel to select the **Combining** option.
3. Press **ENTER** to confirm and save.
4. Perform an IR sync to link the transmitter to the receiver.

In Frequency Diversity, the transmitter will operate on two adjacent receiver channels (1 and 2 or 3 and 4).

Turning Off Frequency 2 (Freq 2)

If a problem develops with one of the frequencies being used by the transmitter, you can lock on to a single frequency by turning off frequency 2. Turning off one frequency allows the transmitter to continue passing audio while a clear frequency can be found for the second channel.

1. From the **Radio** menu navigate to **F2 Ctrl**.
2. Use the controls to set F2 to **On** or **Off**. When set to **On**, the transmitter will pass audio using **Freq 2**.

DRAFT 8.9.18

Input Overload

The **OVERLOAD** message appears when the audio input experiences a high-level signal. The power LED turns red as an additional indicator of an overload. Reduce the input signal or enable the input pad to remove the overload condition.

Tip: To enable the input pad, navigate to **Audio** > **Pad** and select **-12 dB**.

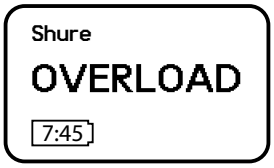

Tone Generator

The transmitter contains an internal tone generator that produces a continuous audio signal. The tone is helpful when conducting a sound check or for troubleshooting the audio signal chain. The level of the tone is adjustable from -60 dB to 0 dB and the frequency can be set to 400 Hz or 1000 Hz.

Tip: Always start with the level set to -60 dB to avoid overloading speakers or headphones.

1. From the **Audio** menu select **Tone Gen**.
2. Set the frequency to **400 Hz** or **1000 Hz**.
3. Select **Level** and use the arrow buttons adjust the value between -60 dB and 0 dB.

Turn off the tone by selecting **Off** from the menu or by cycling the transmitter power.

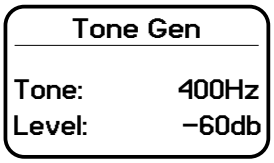

Matching Audio Levels with Mic Offset

When linking two or more transmitters to a receiver, there may be a difference in volume levels between microphones or instruments. If this occurs, use the **Offset** function to match the audio levels and eliminate audible volume differences between transmitters. If using a single transmitter, set **Offset** to 0 dB.

1. Turn on the first transmitter and perform a sound check to test the audio level. Turn off the transmitter when finished.
2. Turn on the second transmitter and perform a sound check to test the audio level. Repeat for any additional transmitters.
3. If there is an audible difference in the sound level between the transmitters, navigate to the **Offset** menu (**Audio** > **Offset**) in the transmitter to increase or decrease the **Offset** in realtime to match the audio levels.

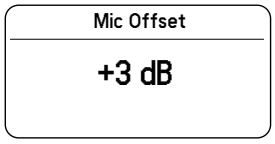

ShowLink Test

The ShowLink Test is a tool to find the boundaries of the ShowLink coverage area. When the ShowLink test is activated, a five-bar display indicating the link quality is shown on the screen. As the transmitter moves away from the access point, the number of bars will decrease. ShowLink control is maintained as long as 1 bar is displayed.

If the transmitter is beyond the coverage range, ShowLink control will not be possible. However, the audio signal will not be affected or interrupted as long as the transmitter is within range of the RF signal.

To improve coverage, adjust the location of your access points or place additional access points to extend coverage.

To activate the ShowLink Test:

1. From the **Utilities** menu, navigate to **SL Test**.
2. Press the **O** button to start the test and walk the transmitter around the coverage area. Monitor the number of bars displayed and the state of the ShowLink icon. Coverage boundaries are indicated by 0 bars displayed or the ShowLink icon is empty.
3. Press the **X** button to exit the ShowLink test.

Tip: During a ShowLink test, press **O** (enter) to drop a marker in Wireless Workbench.

Updating Firmware

Firmware is embedded software in each component that controls functionality. Periodically, new versions of firmware are developed to incorporate additional features and enhancements. To take advantage of design improvements, you can upload and install new versions of the firmware by using the Shure Update Utility. The Shure Update Utility is available for download from http://www.shure.com/.

Firmware Versioning

When performing an update, first download firmware to the receiver, and then update transmitters to the same firmware version to ensure consistent operation.

The firmware numbering for Shure devices uses the following format: MAJOR.MINOR.PATCH (e.g., 1.2.14). At a minimum, all devices on the network (including transmitters), must have the same MAJOR and MINOR firmware version numbers (e.g., 1.2.x).

Updating the Transmitter

1. Download the firmware to the receiver.
2. Access the following menu from the receiver: **Device Configuration** > **Tx Firmware Update**.
3. Align the IR ports between the transmitter and the receiver. IR ports must be aligned for the entire download, which can take 50 seconds or longer.

   Tip: The red alignment LED will turn on when the alignment is correct.
4. Press **ENTER** on the receiver to begin the download to the transmitter. The receiver will display the progress of the update as a percentage.

DRAFT 8.3.18

Specifications

Mic Offset Range

-12 to 21 dB (In 1 dB steps)

Battery Type

Shure SB920 Rechargeable Li-Ion

Battery Runtime

Shure SB920 @ 10 mW

Single Carrier Mode	Up to 9 hours
Frequency Diversity	Up to 6.5 hours

Dimensions

254 mm x 51 mm (10.0 in. x 2.0 in.) L x Dia.

Weight

179 g (6.3 oz.), Without Battery

Housing

Cast Aluminum

Operating Temperature Range

-18°C (0°F) to 50°C (122°F)

Note: Battery characteristics may limit this range.

Storage Temperature Range

-29°C (-20°F) to 74°C (165°F)

Note: Battery characteristics may limit this range.

Audio Input

Configuration

Unbalanced

Maximum Input Level

1 kHz at 1% THD

145 dB SPL (SM58), typical

Note: Dependent on microphone type

RF Output

Antenna Type

Integrated Dual Band Helical

Occupied Bandwidth

<200 kHz

Channel-to-Channel Spacing

Standard Mode	350 kHz
High Density Mode	125 kHz

varies by region

Modulation Type

Shure Axient Digital Proprietary

Power

See Frequency Range and Output Power table, varies by region

Single Carrier Mode	2 mW, 10 mW, 50 mW
Frequency Diversity	2x20 mW

ShowLink

Network Type

IEEE 802.15.4

Antenna Type

Zigbee Dual Conformal

Frequency Range

2.40 to 2.4835 GHz (24 Channels)

RF Output Power

10 dBm (ERP)

varies by region

Frequency Bands and Transmitter RF Power

Band	Frequency Range (MHz)	RF Power Single Carrier (mW)***	RF Power Frequency Diversity (mW per channel)***
G53	470 to 510	2/10/50	2/10/20
G54	479 to 565	2/10/20	2/10/20
G55†	470 to 636	2/10/50	2/10/20
G56◇	470 to 636	2/10/50	2/10/20
G57	470 to 608	2/10/50	2/10/20
G62	510 to 530	2/10/50	2/10/20
K53†	606 to 698	2/10/50	2/10/20
K55	606 to 694	2/10/50	2/10/20
K56	606 to 714	2/10/50	2/10/20
K57	606 to 790	2/10/50	2/10/20
K58	622 to 698	2/10/50	2/10/20
L54	630 to 787	2/10/50	2/10/20
R52†	794 to 806	2/10/50	2/10/20
X55	941 to 960	2/10/50	2/10

Note: ***power delivered to the antenna port.

Note: †operation mode varies according to region. In Brazil, High Density mode is used.

Note: ◇Korea defines power as conducted (ERP) which is 1dB less then declared in table.

DRAFT 8.9.18

K55 606-694 MHz

Country Code Code de Pays Codice di paese Código de país Länder-Kürzel	Frequency Range Gamme de frequences Gamme di frequenza Gama de frequencias Frequenzbereich
A, B, BG, CH, CY, CZ, D, DK, EST, F	*
FIN, GB, GR, H, HR, I, IRL, IS, L, LT	*
M, N, NL, P, PL, RO, S, SK, SLO, TR	*
all other countries	*

* This equipment may be capable of operating on some frequencies not authorized in your region. See Licensing Information.

G56 470-636 MHz

Country Code Code de Pays Codice di paese Código de país Länder-Kürzel	Frequency Range Gamme de frequences Gamme di frequenza Gama de frequencias Frequenzbereich
A, B, BG, CH, CY, CZ, D, DK, EST, F	*
FIN, GB, GR, H, HR, I, IRL, IS, L, LT	*
M, N, NL, P, PL, RO, S, SK, SLO, TR	*
all other countries	*

* This equipment may be capable of operating on some frequencies not authorized in your region. See Licensing Information.

K57 606-790 MHz

Country Code Code de Pays Codice di paese Código de país Länder-Kürzel	Frequency Range Gamme de frequences Gamme di frequenza Gama de frequencias Frequenzbereich
A, B, BG, CH, CY, CZ, D, DK, EST, F	*
FIN, GB, GR, H, HR, I, IRL, IS, L, LT	*
M, N, NL, P, PL, RO, S, SK, SLO, TR	*
all other countries	*

* This equipment may be capable of operating on some frequencies not authorized in your region. See Licensing Information.

DRAFT 8.9.18

Certified under FCC Part 15 and FCC Part 74.

FCC ID: DD4ADX2FDG57, DD4ADX2FDX55.

This device complies with Industry Canada licence-exempt RSS standard(s). Operation of this device is subject to the following two conditions: (1) this device may not cause interference, and (2) this device must accept any interference, including interference that may cause undesired operation of the device. Le présent appareil est conforme aux CNR d'Industrie Canada applicables aux appareils radio exempts de licence. L'exploitation est autorisée aux deux conditions suivantes : (1) l'appareil ne doit pas produire de brouillage, et (2) l'utilisateur de l'appareil doit accepter tout brouillage radioélectrique subi, même si le brouillage est susceptible d'en compromettre le fonctionnement.

Meets essential requirements of the following European Directives:

- WEEE Directive 2002/96/EC, as amended by 2008/34/EC
- RoHS Directive 2011/65/EU

Note: Please follow your regional recycling scheme for batteries and electronic waste

This product meets the Essential Requirements of all relevant European directives and is eligible for CE marking.

Hereby, Shure Incorporated declares that the radio equipment is in compliance with Directive 2014/53/EU. The full text of the EU declaration of conformity is available at the following internet address: http://www.shure.com/europe/compliance

Authorized European representative:
Shure Europe GmbH
Headquarters Europe, Middle East & Africa
Department: EMEA Approval
Jakob-Dieffenbacher-Str. 12
75031 Eppingen, Germany
Phone: +49-7262-92 49 0
Fax: +49-7262-92 49 11 4
Email: EMEAsupport@shure.de

LICENSING INFORMATION

Licensing: A ministerial license to operate this equipment may be required in certain areas. Consult your national authority for possible requirements. Changes or modifications not expressly approved by Shure Incorporated could void your authority to operate the equipment. Licensing of Shure wireless microphone equipment is the user's responsibility, and licensability depends on the user's classification and application, and on the selected frequency. Shure strongly urges the user to contact the appropriate telecommunications authority concerning proper licensing, and before choosing and ordering frequencies.

Information to the user

This equipment has been tested and found to comply with the limits for a Class B digital device, pursuant to Part 15 of the FCC Rules. These limits are designed to provide reasonable protection against harmful interference in a residential installation. This equipment generates uses and can radiate radio frequency energy and, if not installed and used in accordance with the instructions, may cause harmful interference to radio communications. However, there is no guarantee that interference will not occur in a particular installation. If this equipment does cause harmful interference to radio or television reception, which can be determined by turning the equipment off and on, the user is encouraged to try to correct the interference by one or more of the following measures:

- Reorient or relocate the receiving antenna.
- Increase the separation between the equipment and the receiver.
- Connect the equipment to an outlet on a circuit different from that to which the receiver is connected.
- Consult the dealer or an experienced radio/TV technician for help.

This device operates on frequencies shared with other devices. Consult the Federal Communications Commission White Space Database Administration website to determine available channels in your area prior to operation.

No user-operated control of power, frequency, or other parameters are available beyond those specified in this operating manual.

Australia Warning for Wireless

This device operates under an ACMA class licence and must comply with all the conditions of that licence including operating frequencies. Before 31 December 2014, this device will comply if it is operated in the 520-820 MHz frequency band. **WARNING:** After 31 December 2014, in order to comply, this device must not be operated in the 694-820 MHz band.

DRAFT 8.9.18

DRAFT 8.9.18

DRAFT 8.9.18

SHURE®
LEGENDARY
PERFORMANCE™

United States, Canada, Latin America, Caribbean:
Shure Incorporated
5800 West Touhy Avenue
Niles, IL 60714-4608 USA

Phone: 847-600-2000
Fax: 847-600-1212 (USA)
Fax: 847-600-6446
Email: info@shure.com

Europe, Middle East, Africa:
Shure Europe GmbH
Jakob-Dieffenbacher-Str. 12,
75031 Eppingen, Germany

Phone: + 49-7262-92490
Fax: + 49-7262-9249114
Email: info@shure.de

Asia, Pacific:
Shure Asia Limited
22/F, 625 King's Road
North Point, Island East
Hong Kong

Phone: 852-2893-4290
Fax: 852-2893-4055
Email: info@shure.com.hk

PT. GOSHEN SWARA INDONESIA
Kompleks Harco Mangga Dua Blok L No. 35 Jakarta Pusat

I.16.GSI31.00501.0211