MEASUREMENT REPORT

FCC PART 15C

FCC ID:	DD4GLXD1Z3
Applicant:	Shure Incorporated
Application Type:	Certification
Product:	Wireless Bodypack Transmitter
Model No.:	GLXD1+ Z3
Brand Name:	SHURE, SHURE
FCC Classification:	Digital Transmission System (DTS)
FCC Rule Part(s):	Part 15 Subpart C (Section 15.247)
Test Procedure(s):	ANSI C63.10-2013
Test Date:	November 21, 2020 ~ April 07, 2021

Reviewed By: Jame Yuan

Approved By: Robin Wu

ACCREDITED
TESTING LABORATORY
CERTIFICATE #3628.01

The test results relate only to the samples tested.

This equipment has been shown to be capable of compliance with the applicable technical standards as indicated in the measurement report and was tested in accordance with the measurement procedures specified in ANSI C63.10-2013. Test results reported herein relate only to the item(s) tested.

The test report shall not be reproduced except in full without the written approval of MRT Technology (Suzhou) Co., Ltd.

Revision History

Report No.	Version	Description	Issue Date	Note
2103RSU004-U1	Rev. 01	Initial Report	04-13-2021	Valid

CONTENTS

Description Page

1. General Information 5

1.1. Applicant 5
1.2. Manufacturer 5
1.3. Testing Facility 5

2. PRODUCT INFORMATION 6

2.1. Equipment Description 6
2.2. Radio Specification 6
2.3. Test Frequencies 6
2.4. Antennas Details 7
2.5. Test Mode 7
2.6. Test Configuration and Software 7
2.7. Duty Cycle 8
2.8. EMI Suppression Device(s)/Modifications 8
2.9. Labeling Requirements 8
2.10. Test Environment Condition 9

3. ANTENNA REQUIREMENTS 10

4. TEST EQUIPMENT CALIBRATION DATE 11

5. MEASUREMENT UNCERTAINTY 15

6. TEST RESULT 16

6.1. Summary 16
6.2. 6dB Bandwidth Measurement 17
6.2.1. Test Limit 17
6.2.2. Test Procedure used 17
6.2.3. Test Setting 17
6.2.4. Test Setup 17
6.2.5. Test Result 18
6.3. Output Power Measurement 21
6.3.1. Test Limit 21
6.3.2. Test Procedure Used 21
6.3.3. Test Setting 21
6.3.4. Test Setup 22
6.3.5. Test Result 23
6.4. Power Spectral Density Measurement 24
6.4.1. Test Limit 24

6.4.2. Test Procedure Used 24
6.4.3. Test Setting 24
6.4.4. Test Setup 24
6.4.5. Test Result 25
6.5. Conducted Band Edge and Out-of-Band Emissions 28
6.5.1. Test Limit 28
6.5.2. Test Procedure Used 28
6.5.3. Test Settitng 28
6.5.4. Test Setup 29
6.5.5. Test Result 30
6.6. Radiated Spurious Emission Measurement 35
6.6.1. Test Limit 35
6.6.2. Test Procedure Used 35
6.6.3. Test Setting 35
6.6.4. Test Setup 37
6.6.5. Test Result 38
6.7. Radiated Restricted Band Edge Measurement 46
6.7.1. Test Limit 46
6.7.2. Test Procedure Used 47
6.7.3. Test Setting 47
6.7.4. Test Setup 48
6.7.5. Test Result 49
6.8. Duty Cycle Factor Measurement 65
6.8.1. Test Requirement 65
6.8.2. Test Procedures 65
6.8.3. Test Result 67
6.9. AC Conducted Emissions Measurement 68
6.9.1. Test Limit 68
6.9.2. Test Setup 68
6.9.3. Test Result 69

7. CONCLUSION 71

Appendix A - Test Setup Photograph 72

Appendix B - EUT Photograph 73

1. General Information

1.1. Applicant

Shure Incorporated

5800 West Touhy Avenue, Niles, IL 60714-4608, USA

1.2. Manufacturer

Shure Incorporated

5800 West Touhy Avenue, Niles, IL 60714-4608, USA

1.3. Testing Facility

☒	**Test Site – MRT Suzhou Laboratory**	
	Laboratory Location (Suzhou – Wuzhong) D8 Building, No.2 Tian'edang Rd., Wuzhong Economic Development Zone, Suzhou, China **Laboratory Location (Suzhou – SIP)** 4b Building, Liando U Valley, No.200 Xingpu Rd., Shengpu Town, Suzhou Industrial Park, China	
	Laboratory Accreditations	
	A2LA: 3628.01	CNAS: L10551
	FCC: CN1166	ISED: CN0001
	VCCI: R-20025, G-20034, C-20020, T-20020	
☐	**Test Site – MRT Shenzhen Laboratory**	
	Laboratory Location (Shenzhen) 1G, Building A, Junxiangda Building, Zhongshanyuan Road West, Nanshan District, Shenzhen, China	
	Laboratory Accreditations	
	A2LA: 3628.02	CNAS: L10551
	FCC: CN1284	ISED: CN0105
☐	**Test Site – MRT Taiwan Laboratory**	
	Laboratory Location (Taiwan) No. 38, Fuxing 2nd Rd., Guishan Dist., Taoyuan City 333, Taiwan (R.O.C.)	
	Laboratory Accreditations	
	TAF: L3261-190725	
	FCC: 291082, TW3261	ISED: TW3261

2. PRODUCT INFORMATION

2.1. Equipment Description

Product Name	Wireless Bodypack Transmitter
Model No.	GLXD1+ Z3
Test Device Label No.	Radiated Sample: 20210301Sample#19 Conducted Sample: 20210301Sample#21
Radio Specification	2.4GHz & 5.8GHz
Operating Temperature	0 ~ 45 °C
Power Type	AC/DC Adapter or Rechargeable Li-ion Battery Input
Accessories	
AC/DC Adapter	Model No.: SBC10-USB15WSUSTWJ Input Power: 100 - 240V ~ 50/60Hz, 0.6A Output Power: 5VDC 3A
Rechargeable Li-ion Battery	Model No.: SB904 Capacitance: 2420mAh/8.71Wh Rated Voltage: 3.6V

2.2. Radio Specification

Frequency Range	2404 ~ 2478MHz
Declared Channel Bandwidth	Full Bandwidth Mode: 2 MHz Half Bandwidth Mode: 1 MHz
Channel Number	36
Channel Spacing	1MHz
Type of Modulation	2-level CPM with Gaussian shaping (basically GFSK)

Note 1: For other features of this EUT, test report will be issued separately.

Note 2: Total working frequencies refer to operation description.

Note 3: All product information is provided by the manufacturer.

2.3. Test Frequencies

Frequency Bands (MHz)	Test Frequency (MHz)		
	Lowest	Middle	Highest
2404 ~ 2478	2404	2442	2478

2.4. Antennas Details

Antenna Type	Frequency Band (MHz)	Max Peak Gain (dBi)
PIFA Antenna	2404	2.72
	2442	3.45
	2478	2.33

Note: All antenna information is provided by the manufacturer.

2.5. Test Mode

Test Mode	Mode 1: Transmit by Full BW
	Mode 2: Transmit by Half BW

Note: Bandwidth abbreviation is BW.

2.6. Test Configuration and Software

The device was tested per the guidance ANSI C63.10: 2013 that was used to reference the appropriate EUT setup for radiated spurious emissions and AC line conducted emission testing.

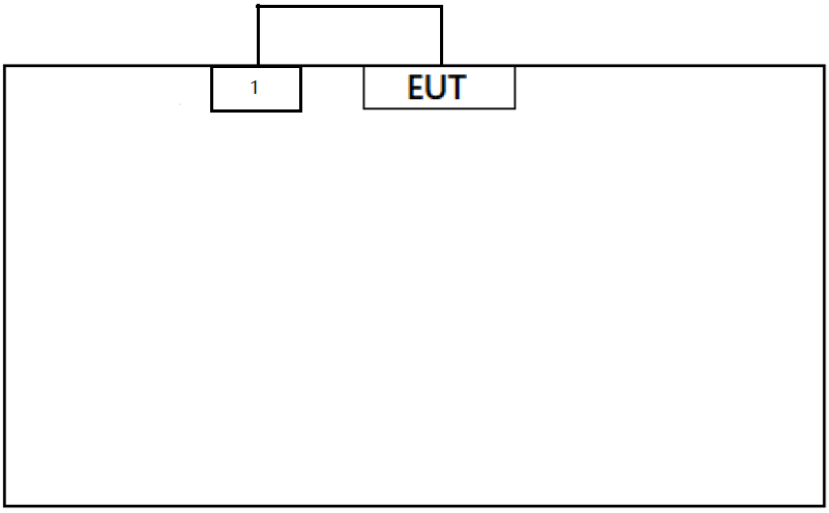

Product		Manufacturer	Model No.
1	Microphone	Shure	95A21105

Note 1: The test utility software used during testing was “ttermpro.exe”, and the version was 4.78.

Note 2: Detail power setting refer to operation description.

2.7. Duty Cycle

The maximum achievable duty cycles for all modes were determined based on measurements performed on a spectrum analyzer in zero-span mode with RBW = 8MHz, VBW = 50MHz. The RBW and VBW were both greater than 50/T, where T is the minimum transmission duration, and the number of sweep points across T was greater than 100. The duty cycles are as follows:

Test Mode	Duty Cycle (%)
Full BW	59.57
Half BW	79.00

Duty Cycle (T = Transmission Duration)	
Full BW (T = 595.3us)	Half BW (T = 1.185ms)
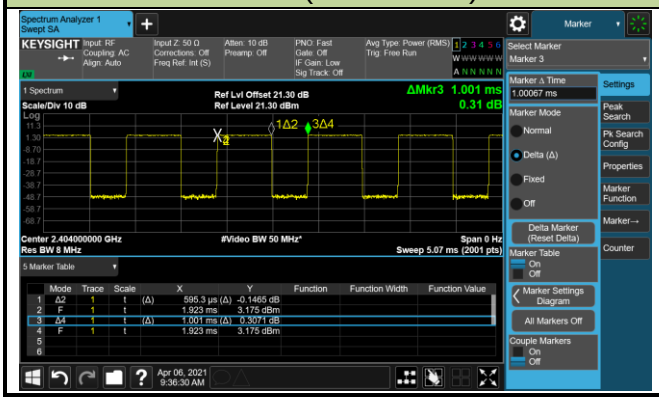	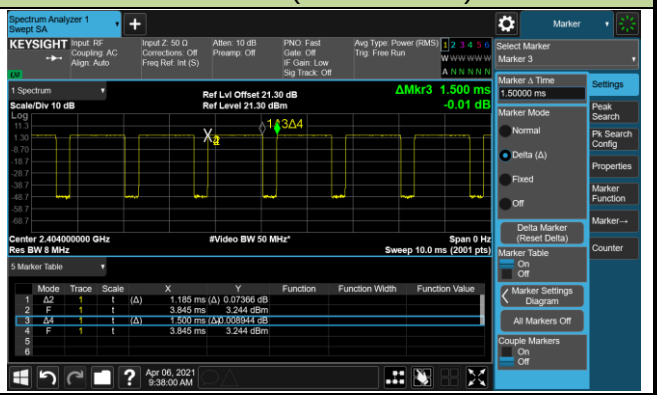

Note: This duty cycle was tested based on continuous transmission of signals via commands.
And it was used to calculate VBW setting during radiated spurious emission and band edge testing.

2.8. EMI Suppression Device(s)/Modifications

No EMI suppression device(s) were added and/or no modifications were made during testing.

2.9. Labeling Requirements

<u>Per 2.1074 & 15.19; Docket 95-19</u>

The label shall be permanently affixed at a conspicuous location on the device; instruction manual or pamphlet supplied to the user and be readily visible to the purchaser at the time of purchase. However, when the device is so small wherein placement of the label with specified statement is not practical, only the FCC ID must be displayed on the device per Section 15.19(a)(5). Please see attachment for FCC ID label and label location.

2.10. Test Environment Condition

Ambient Temperature	15 ~ 35 °C
Relative Humidity	20 ~ 75 %RH

3. ANTENNA REQUIREMENTS

Excerpt from §15.203 of the FCC Rules/Regulations:

"An intentional radiator antenna shall be designed to ensure that no antenna other than that furnished by the responsible party can be used with the device. The use of a permanently attached antenna or of an antenna that uses a unique coupling to the intentional radiator shall be considered sufficient to comply with the provisions of this section."

- The antenna of the device is **permanently attached.**
- There are no provisions for connection to an external antenna.

Conclusion:

The unit complies with the requirement of §15.203.

4. TEST EQUIPMENT CALIBRATION DATE

Conducted Emission (WZ-SR2)

Instrument	Manufacturer	Type No.	Asset No.	Cali. Interval	Cali. Due Date
EMI Test Receiver	R&S	ESR3	MRTSUE06185	1 year	2022/01/12
Two-Line V-Network	R&S	ENV216	MRTSUE06002	1 year	2021/09/09
Thermal Hygrometer	testo	608-H1	MRTSUE06404	1 year	2021/07/26
Shielding Room	MIX-BEP	Chamber-SR2	MRTSUE06215	N/A	N/A

Conducted Emission (SIP-SR2)

Instrument	Manufacturer	Type No.	Asset No.	Cali. Interval	Cali. Due Date
EMI Test Receiver	R&S	ESR3	MRTSUE06613	1 year	2021/07/02
Two-Line V-Network	R&S	ENV216	MRTSUE06003	1 year	2021/09/09
Thermal Hygrometer	testo	608-H1	MRTSUE06621	1 year	2021/12/03

Radiated Emission (WZ-AC1)

Instrument	Manufacturer	Type No.	Asset No.	Cali. Interval	Cali. Due Date
EMI Test Receiver	R&S	ESR7	MRTSUE06001	1 year	2022/01/12
PXA Signal Analyzer	Keysight	N9030B	MRTSUE06395	1 year	2021/08/30
Loop Antenna	Schwarzbeck	FMZB 1519	MRTSUE06025	1 year	2021/10/22
Bilog Period Antenna	Schwarzbeck	VULB 9168	MRTSUE06172	1 year	2021/08/08
Horn Antenna	Schwarzbeck	BBHA 9120D	MRTSUE06023	1 year	2021/09/27
Horn Antenna	Schwarzbeck	BBHA9170	MRTSUE06597	1 year	2021/12/14
Microwave System Amplifier	Agilent	83017A	MRTSUE06076	1 year	2021/11/14
Preamplifier	Schwarzbeck	BBV 9721	MRTSUE06121	1 year	2021/06/11
Thermal Hygrometer	testo	608-H1	MRTSUE06403	1 year	2021/07/26
Anechoic Chamber	TDK	Chamber-AC1	MRTSUE06212	1 year	2021/04/30

Radiated Emission (WZ-AC2)

Instrument	Manufacturer	Type No.	Asset No.	Cali. Interval	Cali. Due Date
MXE EMI Receiver	Keysight	N9038A	MRTSUE06125	1 year	2021/07/02
Loop Antenna	Schwarzbeck	FMZB 1519	MRTSUE06025	1 year	2021/10/22
Bilog Period Antenna	Schwarzbeck	VULB 9162	MRTSUE06022	1 year	2021/05/26
Broad-Band Horn Antenna	Schwarzbeck	BBHA 9120D	MRTSUE06171	1 year	2021/10/25
Horn Antenna	Schwarzbeck	BBHA9170	MRTSUE06597	1 year	2021/12/14
Broadband Coaxial Preamplifier	Schwarzbeck	BBV 9718	MRTSUE06176	1 year	2021/11/14
Preamplifier	Schwarzbeck	BBV 9721	MRTSUE06121	1 year	2021/06/11
Thermal Hygrometer	Minggao	ETH529	MRTSUE06170	1 year	2021/12/08
Anechoic Chamber	RIKEN	Chamber-AC2	MRTSUE06213	1 year	2021/04/30

Radiated Emission (SIP-AC1)

Instrument	Manufacturer	Type No.	Asset No.	Cali. Interval	Cali. Due Date
EMI Test Receiver	R&S	ESR3	MRTSUE06612	1 year	2021/07/02
EXA Signal Analyzer	Keysight	N9010B	MRTSUE06559	1 year	2021/07/23
Loop Antenna	Schwarzbeck	FMZB 1519	MRTSUE06025	1 year	2021/10/22
Bilog Period Antenna	Schwarzbeck	VULB9168	MRTSUE06645	1 year	2021/08/30
Double Ridged Horn Antenna	R&S	HF907	MRTSUE06610	1 year	2021/08/30
Preamplifier	EMCI	EMC051845SE	MRTSUE06600	1 year	2021/11/09
Thermal Hygrometer	testo	608-H1	MRTSUE06620	1 year	2021/12/03
Anechoic Chamber	RIKEN	SIP-SIP-AC1	MRTSUE06554	1 year	2021/12/24

Radiated Emission (SIP-AC2)

Instrument	Manufacturer	Type No.	Asset No.	Cali. Interval	Cali. Due Date
EMI Test Receiver	R&S	ESR3	MRTSUE06613	1 year	2021/07/02
MXA Signal Analyzer	Keysight	N9020B	MRTSUE06604	1 year	2021/09/26
Loop Antenna	Schwarzbeck	FMZB 1519	MRTSUE06025	1 year	2021/10/22
Bilog Period Antenna	Schwarzbeck	VULB9168	MRTSUE06646	1 year	2021/08/30
Horn Antenna	Schwarzbeck	BBHA9120D	MRTSUE06648	1 year	2021/11/26
Horn Antenna	Schwarzbeck	BBHA9170	MRTSUE06599	1 year	2021/11/26
Preamplifier	EMCI	EMC051845SE	MRTSUE06644	1 year	2021/11/09
Preamplifier	EMCI	EMC184045SE	MRTSUE06602	1 year	2021/10/12
Thermal Hygrometer	testo	608-H1	MRTSUE06624	1 year	2021/12/03
Anechoic Chamber	RIKEN	SIP-AC2	MRTSUE06781	1 year	2021/12/24

Radiated Emission (SIP-AC3)

Instrument	Manufacturer	Type No.	Asset No.	Cali. Interval	Cali. Due Date
EMI Test Receiver	R&S	ESR3	MRTSUE06612	1 year	2021/07/02
EXA Signal Analyzer	Keysight	N9010B	MRTSUE06559	1 year	2021/07/23
Loop Antenna	Schwarzbeck	FMZB 1519	MRTSUE06025	1 year	2021/10/22
Bilog Period Antenna	Schwarzbeck	VULB9168	MRTSUE06647	1 year	2021/08/08
Double Ridged Horn Antenna	R&S	HF907	MRTSUE06611	1 year	2021/09/13
Horn Antenna	Schwarzbeck	BBHA9170	MRTSUE06598	1 year	2021/11/26
Preamplifier	EMCI	EMC012645SE	MRTSUE06642	1 year	2022/01/15
Preamplifier	EMCI	EMC184045SE	MRTSUE06641	1 year	2022/01/15
Thermal Hygrometer	testo	608-H1	MRTSUE06622	1 year	2021/12/03
Anechoic Chamber	RIKEN	SIP-AC3	MRTSUE06782	1 year	2021/12/24

Conducted Test Equipment (WZ-TR3)

Instrument	Manufacturer	Type No.	Asset No.	Cali. Interval	Cali. Due Date
EXA Signal Analyzer	Agilent	N9020A	MRTSUE06106	1 year	2021/04/14
EXA Signal Analyzer	Keysight	N9010B	MRTSUE06607	1 year	2022/01/07
Signal Analyzer	R&S	FSV40	MRTSUE06218	1 year	2021/04/14
Power Meter	Agilent	U2021XA	MRTSUE06030	1 year	2021/10/22
USB wideband power sensor	Keysight	U2021XA	MRTSUE06446	1 year	2021/08/30
USB wideband power sensor	Keysight	U2021XA	MRTSUE06447	1 year	2021/08/08
Bluetooth Test Set	Anritsu	MT8852B-042	MRTSUE06389	1 year	2021/06/11
Audio Analyzer	Agilent	U8903B	MRTSUE06143	1 year	2021/06/11
Modulation Analyzer	HP	HP8901A	MRTSUE06098	1 year	2021/09/26
Wideband Radio Communication Tester	R&S	CMW 500	MRTSUE06243	1 year	2021/10/20
DC Power Supply	GWINSTEK	DPS-3303C	MRTSUE06064	N/A	N/A
Temperature & Humidity Chamber	BAOYT	BYH-150CL	MRTSUE06051	1 year	2021/10/22
Thermal Hygrometer	testo	608-H1	MRTSUE06401	1 year	2021/07/26
Attenuator	MVE	6dB	MRTSUE06534	1 year	N/A
Attenuator	MVE	10dB	MRTSUE06543	1 year	N/A

Conducted Test Equipment (SIP-SR5)

Instrument	Manufacturer	Type No.	Asset No.	Cali. Interval	Cali. Due Date
Signal Analyzer	R&S	FSV40	MRTSUE06218	1 year	2021/04/14
PXA Signal Analyzer	Keysight	N9030B	MRTSUE06395	1 year	2021/08/30
USB wideband power sensor	Agilent	U2021XA	MRTSUE06595	1 year	2021/09/26
USB wideband power sensor	Agilent	U2021XA	MRTSUE06596	1 year	2021/09/26
Wideband Radio Communication Tester	R&S	CMW 500	MRTSUE06243	1 year	2021/10/20
Bluetooth Test Set	Anritsu	MT8852B-042	MRTSUE06389	1 year	2021/06/11
Attenuator	MVE	6dB	MRTSUE06534	1 year	N/A
Attenuator	MVE	10dB	MRTSUE06543	1 year	N/A
Temperature Chamber	BAOYT	BYG-408CS	MRTSUE06847	1 year	2022/02/23
Thermal Hygrometer	testo	622	MRTSUE06629	1 year	2021/11/25

Software	Version	Function
EMI Software	V3	EMI Test Software

5. MEASUREMENT UNCERTAINTY

Where relevant, the following test uncertainty levels have been estimated for tests performed on the EUT as specified in CISPR 16-4-2. This uncertainty represents an expanded uncertainty expressed at approximately the 95% confidence level using a coverage factor of k = 2.

AC Conducted Emission Measurement
Measurement Uncertainty for a Level of Confidence of 95% (U=2Uc(y)): 9kHz~150kHz: 3.74dB 150kHz~30MHz: 3.44dB
Radiated Disturbance
Measurement Uncertainty for a Level of Confidence of 95% (U=2Uc(y)): Horizontal: 9kHz~300MHz: 5.04dB 300MHz~1GHz: 4.95dB 1GHz~40GHz: 6.40dB Vertical: 9kHz~300MHz: 5.24dB 300MHz~1GHz: 6.03dB 1GHz~40GHz: 6.40dB
Spurious Emissions, Conducted
Measuring Uncertainty for a Level of Confidence of 95% (U=2Uc(y)): 0.78dB
Output Power
Measuring Uncertainty for a Level of Confidence of 95% (U=2Uc(y)): 1.13dB
Power Spectrum Density
Measuring Uncertainty for a Level of Confidence of 95% (U=2Uc(y)): 1.15dB
Occupied Bandwidth
Measuring Uncertainty for a Level of Confidence of 95% (U=2Uc(y)): 0.28%

6. TEST RESULT

6.1. Summary

FCC Part Section(s)	Test Description	Test Limit	Test Condition	Test Result	Reference
15.247(a)(2)	6dB Bandwidth	≥ 500kHz	Conducted	Pass	Section 6.2
15.247(b)(3)	Output Power	≤ 1Watt		Pass	Section 6.3
15.247(e)	Power Spectral Density	≤ 8dBm / 3kHz		Pass	Section 6.4
15.247(d)	Band Edge / Out-of-Band Emissions	≥ 20dBc (Peak)		Pass	Section 6.5
15.205 15.209	General Field Strength (Restricted Bands and Radiated Emission)	Emissions in restricted bands must meet the radiated limits detailed in 15.209	Radiated	Pass	Section 6.6 & 6.7
15.35(c)	Duty Cycle Factor	N/A		N/A	Section 6.8
15.207	AC Conducted Emissions 150kHz - 30MHz	< FCC 15.207 limits	Line Conducted	Pass	Section 6.9

Notes:

1) The analyzer plots shown in this section were all taken with a correction table loaded into the analyzer. The correction table was used to account for the losses of the cables and attenuators used as part of the system to connect the EUT to the analyzer at all frequencies of interest.
2) All modes of operation and data rates were investigated. For radiated emission test, every axis (X, Y, Z) was also verified. The test results shown in the following sections represent the worst case emissions.

6.2. 6dB Bandwidth Measurement

6.2.1.Test Limit

The minimum 6dB bandwidth shall be at least 500 kHz.

6.2.2.Test Procedure used

ANSI C63.10-2013 - Section 11.8

6.2.3.Test Setting

1. The Spectrum's automatic bandwidth measurement capability was used to perform the 6dB bandwidth measurement. The "X" dB bandwidth parameter was set to X = 6. The bandwidth measurement was not influenced by any intermediate power nulls in the fundamental emission.
2. Set RBW = 100 kHz
3. VBW ≥ 3 × RBW
4. Detector = Peak
5. Trace mode = Max hold
6. Sweep = Auto couple
7. Allow the trace was allowed to stabilize

6.2.4.Test Setup

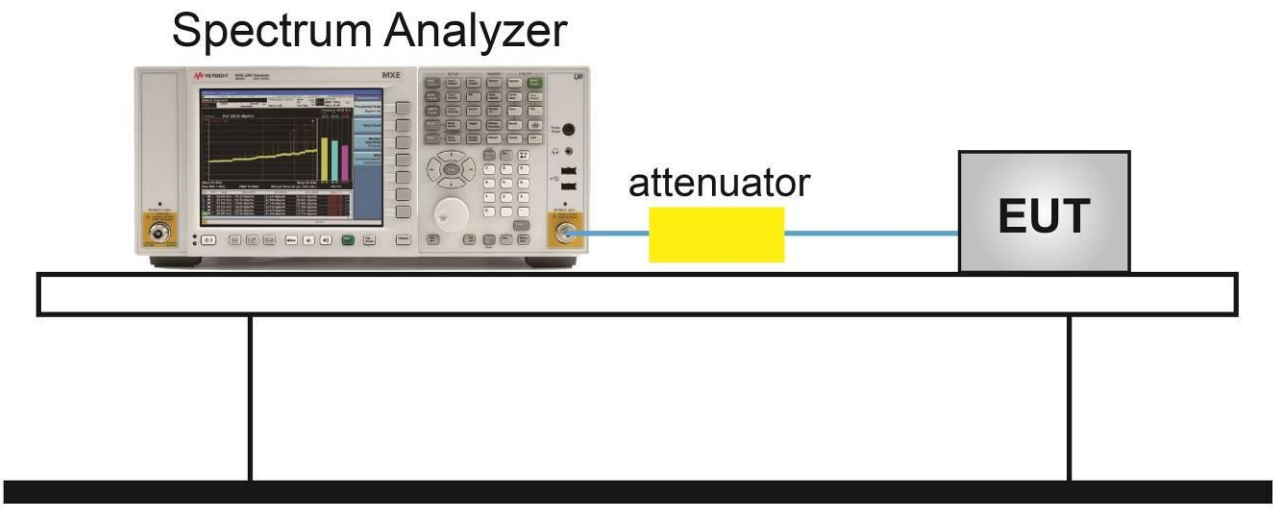

6.2.5.Test Result

Test Site	SIP-SR5	Test Engineer	Alisa Deng
Test Date	2021/04/06		

Test Mode	Frequency (MHz)	6dB Bandwidth (MHz)	Limit (MHz)	Result
Full BW	2404	1.891	≥ 0.5	Pass
Full BW	2442	2.038	≥ 0.5	Pass
Full BW	2478	2.035	≥ 0.5	Pass
Half BW	2404	1.012	≥ 0.5	Pass
Half BW	2442	1.040	≥ 0.5	Pass
Half BW	2478	1.029	≥ 0.5	Pass

Full BW 6dB Bandwidth	
Channel 01 (2404MHz)	Channel 06 (2442MHz)
Channel 11 (2478MHz)	

Half BW 6dB Bandwidth	
Channel 01 (2404MHz)	Channel 06 (2442MHz)
Channel 11 (2478MHz)	

6.3. Output Power Measurement

6.3.1.Test Limit

The maximum out power shall be less 1 Watt (30dBm).

The conducted output power limit specified in paragraph FCC Part 15.247(b) of this section is based on the use of antennas with directional gains that do not exceed 6 dBi. If transmitting antennas of directional gain greater than 6 dBi are used, the conducted output power from the intentional radiator shall be reduced below the stated values in paragraphs FCC Part 15.247(b)(3) of this section, as appropriate, by the amount in dB that the directional gain of the antenna exceeds 6 dBi.

6.3.2.Test Procedure Used

ANSI C63.10-2013 Section 11.9.1.3

ANSI C63.10-2013 Section 11.9.2.3

6.3.3.Test Setting

Method PKPM1 (Peak Power Measurement of Signals with DTS BW ≤ 50MHz)

Peak power measurements were performed only when the EUT was transmitting at its maximum power control level using a broadband power meter with a pulse sensor. The pulse sensor employs a VBW = 50MHz so this method was only used for signals whose DTS bandwidth was less than or equal to 50MHz.

Average Power Measurement

Average power measurements were performed only when the EUT was transmitting at its maximum power control level using a broadband power meter with a pulse sensor. The power meter implemented triggering and gating capabilities which were set up such that power measurements were recorded only during the ON time of the transmitter.

6.3.4.Test Setup

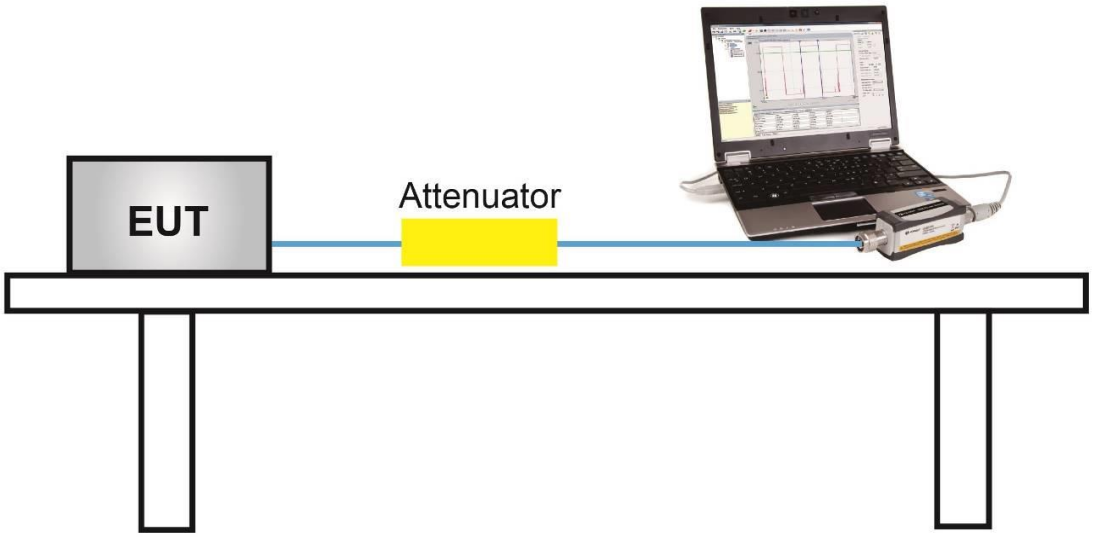

6.3.5.Test Result

Test Site	SIP-SR5	Test Engineer	Alisa Deng
Test Date	2021/03/24		

Test Mode	Freq. (MHz)	Peak Power (dBm)	Limit (dBm)	Result
Full BW	2404	4.51	≤ 30.00	Pass
Full BW	2442	4.93	≤ 30.00	Pass
Full BW	2478	6.86	≤ 30.00	Pass
Half BW	2404	4.37	≤ 30.00	Pass
Half BW	2442	4.90	≤ 30.00	Pass
Half BW	2478	6.74	≤ 30.00	Pass

Test Result of Average Output Power (Reporting Only)

Test Mode	Freq. (MHz)	Average Power (dBm)	Limit (dBm)	Result
Full BW	2404	3.42	≤ 30.00	Pass
Full BW	2442	3.93	≤ 30.00	Pass
Full BW	2478	5.30	≤ 30.00	Pass
Half BW	2404	3.43	≤ 30.00	Pass
Half BW	2442	4.00	≤ 30.00	Pass
Half BW	2478	6.09	≤ 30.00	Pass

6.4. Power Spectral Density Measurement

6.4.1.Test Limit

The maximum permissible power spectral density is 8dBm in any 3 kHz band.

The same method of determining the conducted output power shall be used to determine the power spectral density.

6.4.2.Test Procedure Used

ANSI C63.10-2013 - Section 11.10.2

6.4.3.Test Setting

1. Analyzer was set to the center frequency of the DTS channel under investigation
2. Span ≥ 1.5 times the OBW
3. RBW = 3kHz
4. VBW = 10kHz
5. Detector = Peak
6. Sweep time = auto couple
7. Trace mode = max hold
8. Trace was allowed to stabilize

6.4.4.Test Setup

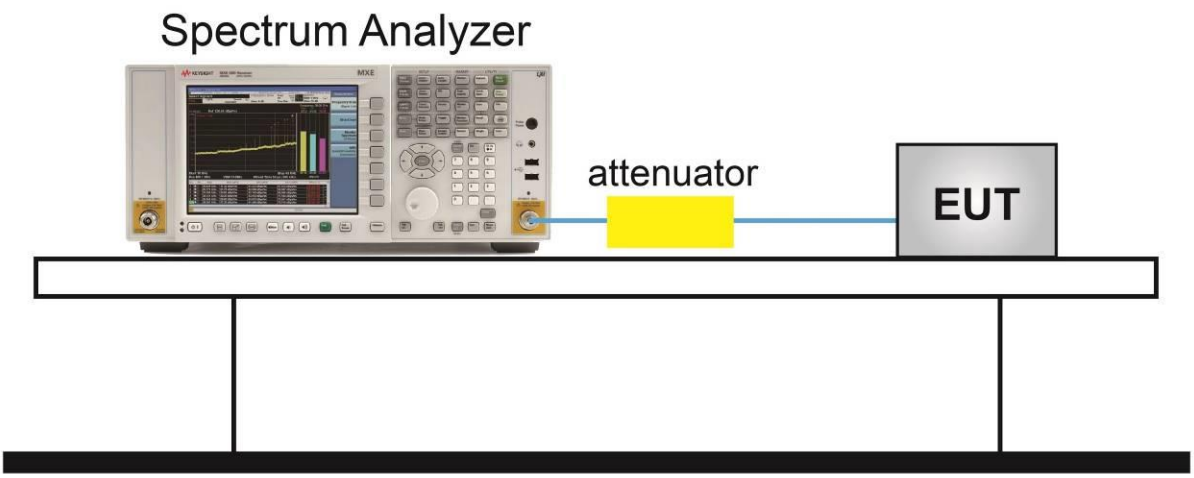

6.4.5.Test Result

Test Site	SIP-SR5	Test Engineer	Alisa Deng
Test Date	2020/04/06		

Test Mode	Freq. (MHz)	PKPSD (dBm / 3kHz)	Limit (dBm / 3kHz)	Result
Full BW	2404	-13.29	≤ 8.00	Pass
Full BW	2442	-12.34	≤ 8.00	Pass
Full BW	2478	-10.30	≤ 8.00	Pass
Half BW	2404	-9.46	≤ 8.00	Pass
Half BW	2442	-8.78	≤ 8.00	Pass
Half BW	2478	-6.61	≤ 8.00	Pass

Full BW PKPSD	
Channel 01 (2404MHz)	Channel 06 (2442MHz)
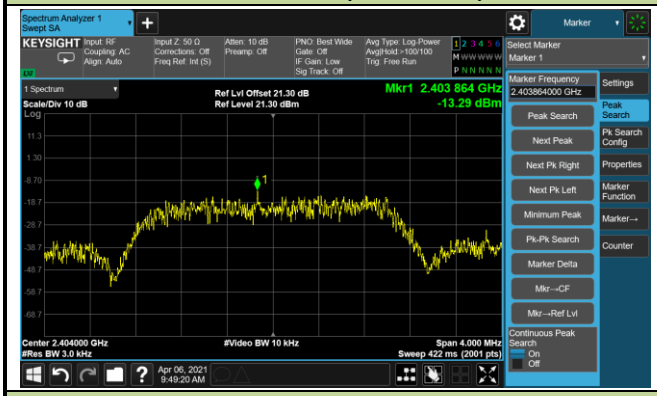	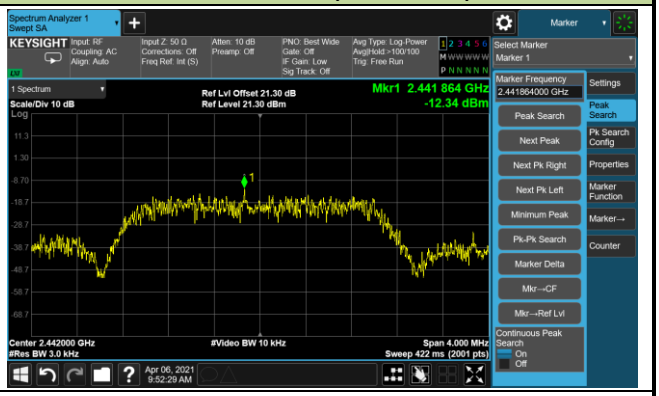
Channel 11 (2478MHz)	

Half BW - PKPSD	
Channel 01 (2404MHz)	Channel 06 (2442MHz)
	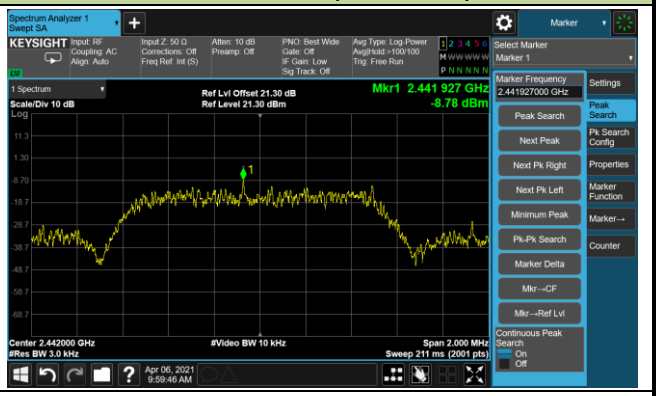
Channel 11 (2478MHz)	

6.5. Conducted Band Edge and Out-of-Band Emissions

6.5.1.Test Limit

The limit for out-of-band spurious emissions at the band edge is 20dB below the fundamental emission level, as determined from the in-band power measurement of the DTS channel performed in a 100 kHz bandwidth per the PSD procedure.

6.5.2.Test Procedure Used

ANSI C63.10-2013 - Section 11.11

6.5.3.Test Settitng

Reference level measurement

1. Set instrument center frequency to DTS channel center frequency
2. Set the span to ≥ 1.5 times the DTS bandwidth
3. Set the RBW = 100 kHz
4. Set the VBW ≥ 3 x RBW
5. Detector = peak
6. Sweep time = auto couple
7. Trace mode = max hold
8. Allow trace to fully stabilize

Emission level measurement

1. Set the center frequency and span to encompass frequency range to be measured
2. RBW = 100kHz
3. VBW = 300kHz
4. Detector = Peak
5. Trace mode = max hold
6. Sweep time = auto couple
7. The trace was allowed to stabilize

6.5.4.Test Setup

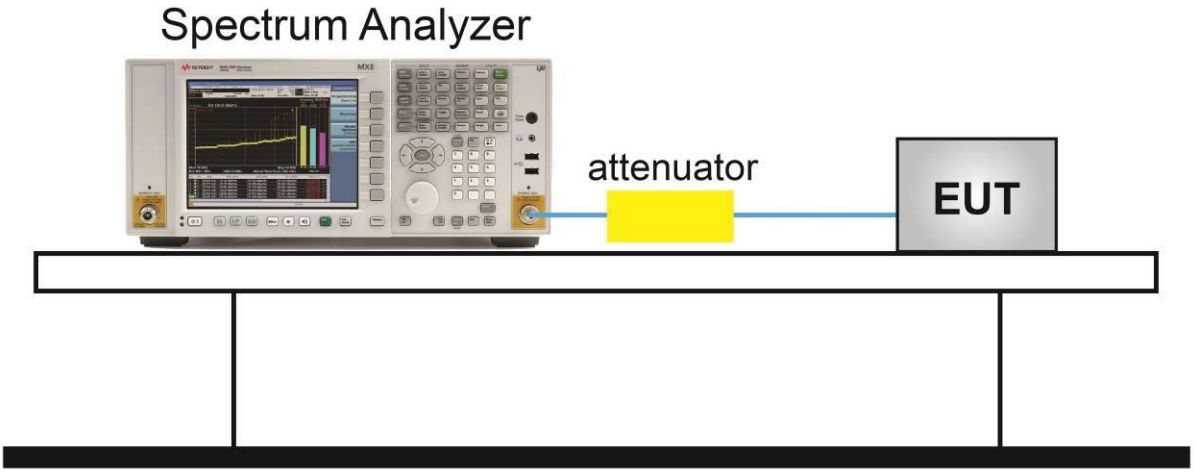

6.5.5.Test Result

Test Site	SIP-SR5	Test Engineer	Alisa Deng
Test Date	2021/04/06		

Test Mode	Frequency (MHz)	Limit	Result
Full BW	2404	20dBc	Pass
Full BW	2442	20dBc	Pass
Full BW	2478	20dBc	Pass
Half BW	2404	20dBc	Pass
Half BW	2442	20dBc	Pass
Half BW	2478	20dBc	Pass

Full BW Out-of-Band Emissions

2404MHz

100kHz PSD Reference Level

Low Band Edge

Spurious Emission

2442MHz

100kHz PSD Reference Level

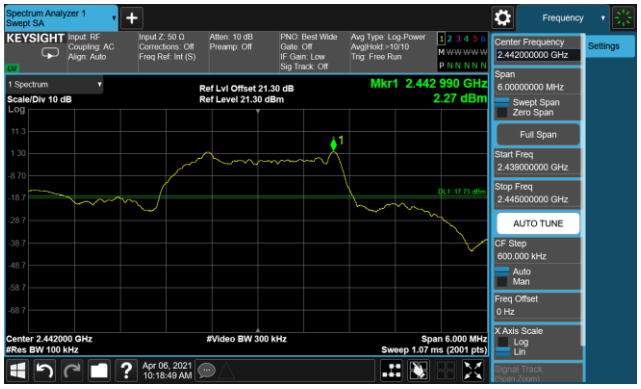

Spurious Emission

Full BW Out-of-Band Emissions	
2478MHz	
100kHz PSD Reference Level	High Band Edge
Spurious Emission	
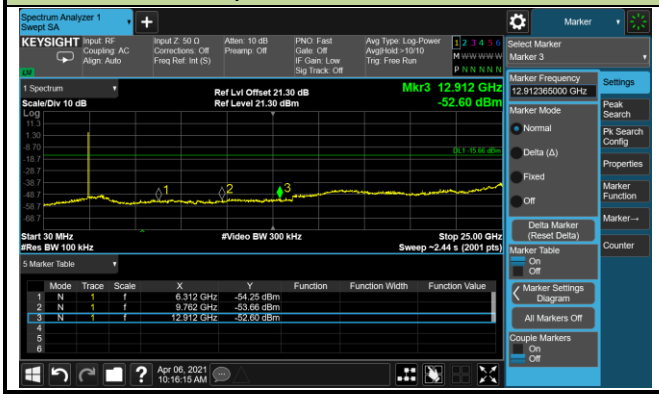	

Half BW Out-of-Band Emissions

2404MHz

100kHz PSD Reference Level

Low Band Edge

Spurious Emission

2442MHz

100kHz PSD Reference Level

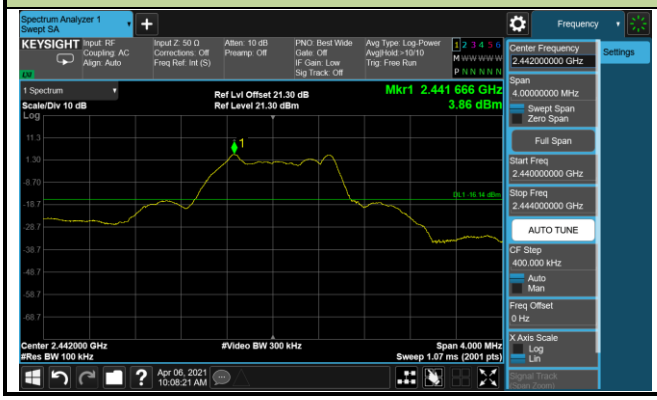

Spurious Emission

Half BW Out-of-Band Emissions	
2478MHz	
100kHz PSD Reference Level	High Band Edge
Spurious Emission	

6.6. Radiated Spurious Emission Measurement

6.6.1.Test Limit

All out of band emissions appearing in a restricted band as specified in Section 15.205 of the Title 47 CFR must not exceed the limits shown in Table per Section 15.209.

FCC Part 15 Subpart C Paragraph 15.209		
Frequency [MHz]	Field Strength [uV/m]	Measured Distance [Meters]
0.009 - 0.490	2400/F (kHz)	300
0.490 - 1.705	24000/F (kHz)	30
1.705 - 30	30	30
30 - 88	100	3
88 - 216	150	3
216 - 960	200	3
Above 960	500	3

6.6.2.Test Procedure Used

ANSI C63.10-2013 - Section 6.3 & 6.4 & 6.5 & 6.6

6.6.3.Test Setting

Table 1 - RBW as a function of frequency

Frequency	RBW
9 ~ 150 kHz	200 ~ 300 Hz
0.15 ~ 30 MHz	9 ~ 10 kHz
30 ~ 1000 MHz	100 ~ 120 kHz
> 1000MHz	1MHz

Quasi-Peak Measurements below 1GHz

1. Analyzer center frequency was set to the frequency of the radiated spurious emission of interest

2. Span was set greater than 1MHz

3. RBW = as specified in Table 1

4. Detector = CISPR quasi-peak

5. Sweep time = auto couple

6. Trace was allowed to stabilize

Peak Measurements above 1GHz

1. Analyzer center frequency was set to the frequency of the radiated spurious emission of interest

2. RBW = 1MHz

3. VBW = 3MHz

4. Detector = peak

5. Sweep time = auto couple

6. Trace mode = max hold

7. Trace was allowed to stabilize

Average Measurements above 1GHz (Method VB)

1. Analyzer center frequency was set to the frequency of the radiated spurious emission of interest

2. RBW = 1MHz

3. VBW; If the EUT is configured to transmit with duty cycle ≥ 98%, set VBW = 10 Hz.

If the EUT duty cycle is < 98%, set VBW ≥ 1/T. T is the minimum transmission duration.

4. Detector = Peak

5. Sweep time = auto

6. Trace mode = max hold

7. Trace was allowed to stabilize

6.6.4.Test Setup

Below 1GHz Test Setup:

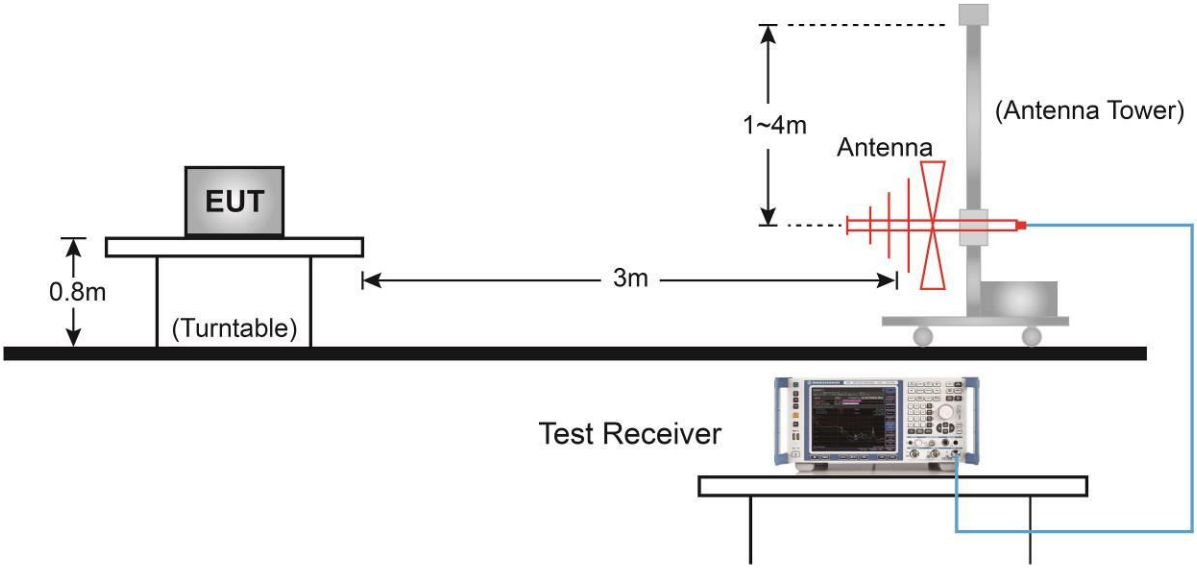

Above 1GHz Test Setup:

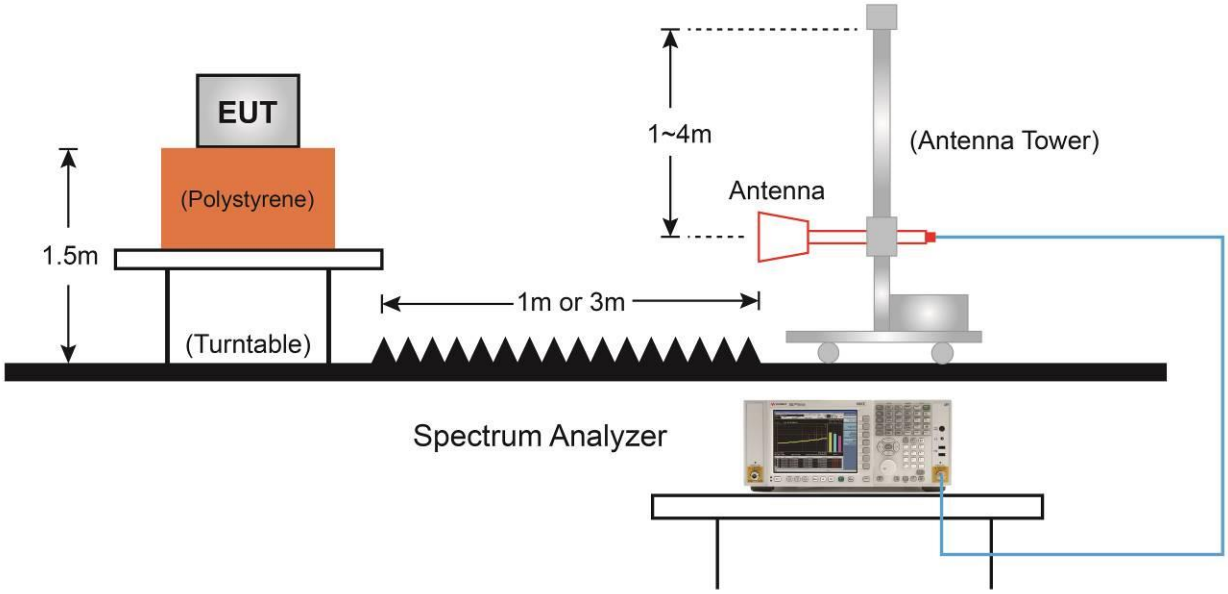

6.6.5.Test Result

Test Site	SIP-AC3	Test Engineer	Allen Zou
Test Date	2020/11/21	Test Frequency	2404MHz
Test Mode	Full BW		
Remark	1. Average measurement was not performed if peak level lower than average limit. 2. Other frequency was 20dB below limit line within 1-18GHz, there is not show in the report.		

Mark	Frequency (MHz)	Reading Level (dBμV)	Factor (dB)	Measure Level (dBμV/m)	Limit (dBμV/m)	Margin (dB)	Detector	Polarization
	7213.5	61.3	-8.1	53.2	74.0	-20.8	Peak	Horizontal
*	9619.0	65.8	-5.9	59.9	74.0	-14.1	Peak	Horizontal
*	16213.0	47.8	2.3	50.1	74.0	-23.9	Peak	Horizontal
	17915.0	46.7	4.9	51.6	74.0	-22.4	Peak	Horizontal
	7213.5	57.0	-8.1	48.9	74.0	-25.1	Peak	Vertical
*	9619.0	62.2	-5.9	56.3	74.0	-17.6	Peak	Vertical
*	16296.0	48.9	2.3	51.2	74.0	-22.8	Peak	Vertical
	17949.0	48.2	4.9	53.1	74.0	-20.9	Peak	Vertical

Note 1: “*” means test frequency didn't fall into restricted band.

Note 2: Measure Level (dBμV/m) = Reading Level (dBμV) + Factor (dB)

Factor (dB) = Cable Loss (dB) + Antenna Factor (dB/m) - Pre_Amplifier Gain (dB)

Test Site	SIP-AC3	Test Engineer	Allen Zou
Test Date	2020/11/21	Test Frequency	2442MHz
Test Mode	Full BW		
Remark	1. Average measurement was not performed if peak level lower than average limit. 2. Other frequency was 20dB below limit line within 1-18GHz, there is not show in the report.		

Mark	Frequency (MHz)	Reading Level (dBμV)	Factor (dB)	Measure Level (dBμV/m)	Limit (dBμV/m)	Margin (dB)	Detector	Polarization
	7324.0	59.3	-8.2	51.1	74.0	-22.9	Peak	Horizontal
*	9763.5	66.3	-6.1	60.2	74.0	-13.8	Peak	Horizontal
*	16682.5	48.4	3.2	51.6	74.0	-22.4	Peak	Horizontal
	17991.5	46.6	5.0	51.6	74.0	-22.4	Peak	Horizontal
	7324.0	54.7	-8.2	46.5	74.0	-27.5	Peak	Vertical
*	9772.0	61.1	-6.1	55.0	74.0	-19.0	Peak	Vertical
*	15279.5	49.3	1.3	50.6	74.0	-23.4	Peak	Vertical
	17456.0	48.4	4.1	52.5	74.0	-21.5	Peak	Vertical

Note 1: “*” means test frequency didn't fall into restricted band.

Note 2: Measure Level (dBμV/m) = Reading Level (dBμV) + Factor (dB)

Factor (dB) = Cable Loss (dB) + Antenna Factor (dB/m) - Pre_Amplifier Gain (dB)

Test Site	SIP-AC3	Test Engineer	Allen Zou
Test Date	2020/11/21	Test Frequency	2476MHz
Test Mode	Full BW		
Remark	1. Average measurement was not performed if peak level lower than average limit. 2. Other frequency was 20dB below limit line within 1-18GHz, there is not show in the report.		

Mark	Frequency (MHz)	Reading Level (dBμV)	Factor (dB)	Measure Level (dBμV/m)	Limit (dBμV/m)	Margin (dB)	Detector	Polarization
	7434.5	59.2	-7.9	51.3	74.0	-22.7	Peak	Horizontal
*	9908.0	62.7	-6.2	56.5	74.0	-17.5	Peak	Horizontal
*	16793.0	48.3	3.7	52.0	74.0	-22.0	Peak	Horizontal
	17838.5	48.1	4.6	52.7	74.0	-21.3	Peak	Horizontal
	7434.5	53.6	-7.9	45.7	74.0	-28.3	Peak	Vertical
*	9908.0	58.3	-6.2	52.1	74.0	-21.9	Peak	Vertical
*	17371.0	47.5	4.3	51.8	74.0	-22.2	Peak	Vertical
	17821.5	47.7	4.5	52.2	74.0	-21.8	Peak	Vertical

Note 1: “*” means test frequency didn't fall into restricted band.

Note 2: Measure Level (dBμV/m) = Reading Level (dBμV) + Factor (dB)

Factor (dB) = Cable Loss (dB) + Antenna Factor (dB/m) - Pre_Amplifier Gain (dB)

Test Site	SIP-AC3	Test Engineer	Allen Zou
Test Date	2020/11/21	Test Frequency	2404MHz
Test Mode	Half BW		
Remark	1. Average measurement was not performed if peak level lower than average limit. 2. Other frequency was 20dB below limit line within 1-18GHz, there is not show in the report.		

Mark	Frequency (MHz)	Reading Level (dBμV)	Factor (dB)	Measure Level (dBμV/m)	Limit (dBμV/m)	Margin (dB)	Detector	Polarization
*	7213.5	61.7	-8.1	53.6	74.0	-20.4	Peak	Horizontal
*	9619.0	66.2	-5.9	60.3	74.0	-13.7	Peak	Horizontal
	15841.0	48.0	2.1	50.1	74.0	-23.9	Peak	Horizontal
	17687.5	47.5	4.3	51.8	74.0	-22.2	Peak	Horizontal
*	7213.5	57.5	-8.1	49.4	74.0	-24.6	Peak	Vertical
*	9619.0	62.3	-5.9	56.4	74.0	-17.6	Peak	Vertical
	15756.0	48.5	2.1	50.6	74.0	-23.4	Peak	Vertical
	17957.5	48.2	4.9	53.1	74.0	-20.9	Peak	Vertical

Note 1: “*” means test frequency didn't fall into restricted band.

Note 2: Measure Level (dBμV/m) = Reading Level (dBμV) + Factor (dB)

Factor (dB) = Cable Loss (dB) + Antenna Factor (dB/m) - Pre_Amplifier Gain (dB)

Test Site	SIP-AC3	Test Engineer	Allen Zou
Test Date	2020/11/21	Test Frequency	2442MHz
Test Mode	Half BW		
Remark	1. Average measurement was not performed if peak level lower than average limit. 2. Other frequency was 20dB below limit line within 1-18GHz, there is not show in the report.		

Mark	Frequency (MHz)	Reading Level (dBμV)	Factor (dB)	Measure Level (dBμV/m)	Limit (dBμV/m)	Margin (dB)	Detector	Polarization
	7324.0	59.8	-8.2	51.6	74.0	-22.4	Peak	Horizontal
*	9763.5	65.3	-6.1	59.2	74.0	-14.8	Peak	Horizontal
*	17490.0	47.8	4.5	52.3	74.0	-21.7	Peak	Horizontal
	17974.5	46.6	4.9	51.5	74.0	-22.5	Peak	Horizontal
	7324.0	56.2	-8.2	48.0	74.0	-26.0	Peak	Vertical
*	9772.0	61.1	-6.1	55.0	74.0	-19.0	Peak	Vertical
	16079.0	49.6	2.4	52.0	74.0	-22.0	Peak	Vertical
*	17430.5	47.5	4.3	51.8	74.0	-22.2	Peak	Vertical

Note 1: “*” means test frequency didn't fall into restricted band.

Note 2: Measure Level (dBμV/m) = Reading Level (dBμV) + Factor (dB)

Factor (dB) = Cable Loss (dB) + Antenna Factor (dB/m) - Pre_Amplifier Gain (dB)

Test Site	SIP-AC3	Test Engineer	Allen Zou
Test Date	2020/11/21	Test Frequency	2476MHz
Test Mode	Half BW		
Remark	1. Average measurement was not performed if peak level lower than average limit. 2. Other frequency was 20dB below limit line within 1-18GHz, there is not show in the report.		

Mark	Frequency (MHz)	Reading Level (dBμV)	Factor (dB)	Measure Level (dBμV/m)	Limit (dBμV/m)	Margin (dB)	Detector	Polarization
	7434.5	58.5	-7.9	50.6	74.0	-23.4	Peak	Horizontal
*	9908.0	62.5	-6.2	56.3	74.0	-17.7	Peak	Horizontal
*	16801.5	47.9	3.6	51.5	74.0	-22.5	Peak	Horizontal
	17889.5	47.4	4.8	52.2	74.0	-21.8	Peak	Horizontal
	7434.5	55.0	-7.9	47.1	74.0	-26.9	Peak	Vertical
*	9908.0	58.3	-6.2	52.1	74.0	-21.9	Peak	Vertical
*	16640.0	48.7	3.3	52.0	74.0	-22.0	Peak	Vertical
	18000.0	47.1	5.1	52.2	74.0	-21.8	Peak	Vertical

Note 1: “*” means test frequency didn't fall into restricted band.

Note 2: Measure Level (dBμV/m) = Reading Level (dBμV) + Factor (dB)

Factor (dB) = Cable Loss (dB) + Antenna Factor (dB/m) - Pre_Amplifier Gain (dB)

The Result of Radiated Emission below 1GHz:

Site: SIP-AC3	Time: 2021/04/07
Limit: FCC_Part15.209_RE(3m)	Engineer: White Wang
Probe: SIP-AC3_VULB 9168 _30-1000MHz	Polarity: Horizontal
EUT: Wireless Bodypack Transmitter	Power: By Battery
Test Mode: Transmit by Full mode bandwidth at channel 2404MHz	

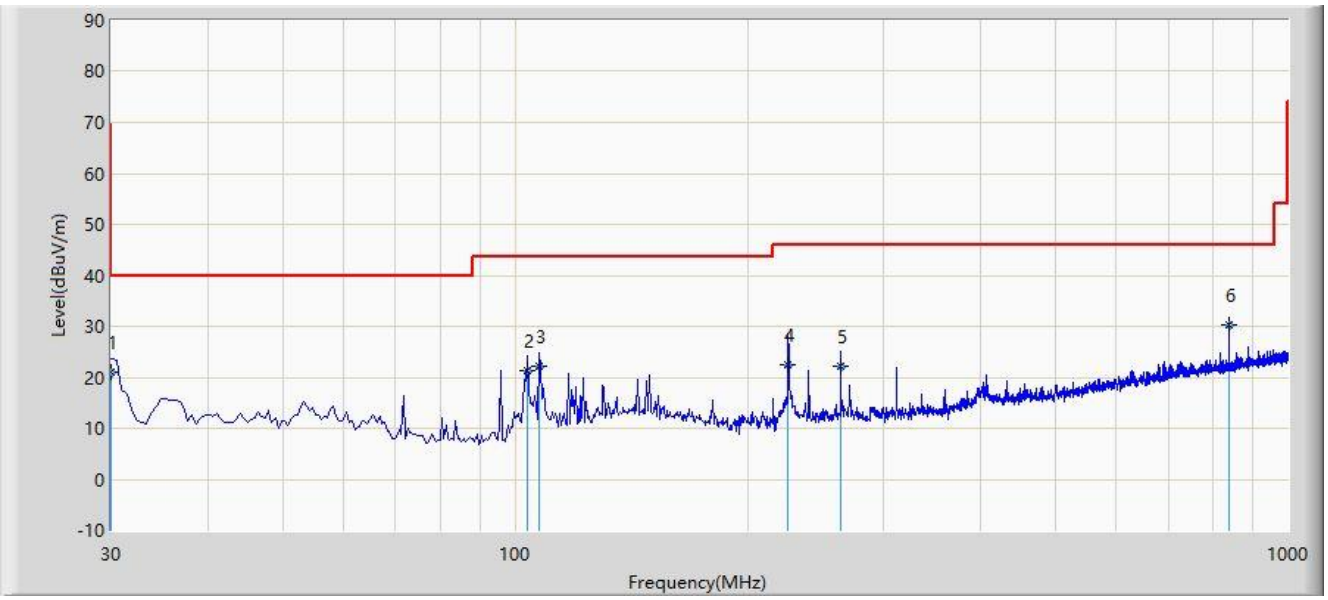

No	Flag	Mark	Frequency (MHz)	Measure Level (dBuV/m)	Reading Level (dBuV)	Margin (dB)	Limit (dBuV/m)	Factor (dB)	Type
1			30.000	21.103	4.300	-18.897	40.000	16.803	QP
2			103.720	21.347	7.300	-22.153	43.500	14.047	QP
3			107.600	22.119	7.500	-21.381	43.500	14.619	QP
4			225.455	22.492	7.900	-23.508	46.000	14.592	QP
5			263.700	22.220	5.100	-23.780	46.000	17.120	QP
6		*	839.950	30.157	1.800	-15.843	46.000	28.357	QP

Note 1: Measure Level (dBμV/m) = Reading Level (dBμV) + Factor (dB)

Factor (dB) = Cable Loss (dB) + Antenna Factor (dB/m)

Note 2: The amplitude of radiated emissions (frequency range from 9kHz to 30MHz and 18GHz to 25GHz) is that proximity to ambient noise, which also are attenuated more than 20 dB below the permissible value. Therefore, the data is not presented in the report.

Site: SIP-AC3	Time: 2021/04/07 - 15:06
Limit: FCC_Part15.209_RE(3m)	Engineer: White Wang
Probe: SIP-AC3_VULB 9168 _30-1000MHz	Polarity: Vertical
EUT: Wireless Bodypack Transmitter	Power: By Battery
Test Mode: Transmit by Full mode bandwidth at channel 2404MHz	

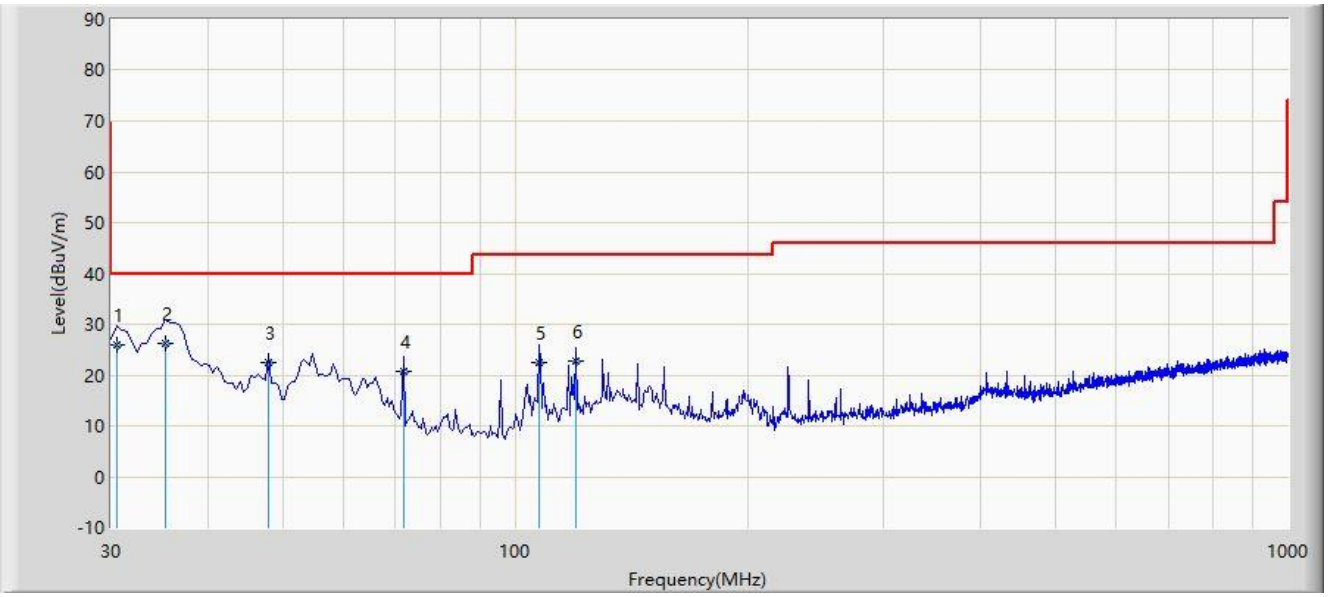

No	Flag	Mark	Frequency (MHz)	Measure Level (dBuV/m)	Reading Level (dBuV)	Margin (dB)	Limit (dBuV/m)	Factor (dB)	Type
1			30.485	25.989	9.300	-14.011	40.000	16.689	QP
2		*	35.335	26.150	9.100	-13.850	40.000	17.051	QP
3			47.945	22.488	4.500	-17.512	40.000	17.988	QP
4			71.710	20.683	5.500	-19.317	40.000	15.183	QP
5			107.600	22.419	7.800	-21.081	43.500	14.619	QP
6			119.725	22.797	7.500	-20.703	43.500	15.297	QP

Note 1: Measure Level (dBμV/m) = Reading Level (dBμV) + Factor (dB)

Factor (dB) = Cable Loss (dB) + Antenna Factor (dB/m)

Note 2: The amplitude of radiated emissions (frequency range from 9kHz to 30MHz and 18GHz to 25GHz) is that proximity to ambient noise, which also are attenuated more than 20 dB below the permissible value. Therefore, the data is not presented in the report.

6.7. Radiated Restricted Band Edge Measurement

6.7.1.Test Limit

For 15.205 requirement:

Radiated emissions which fall in the restricted bands, as defined in Section 15.205(a) of FCC part 15, must also comply with the radiated emission limits specified in Section 15.209(a).

Frequency (MHz)	Frequency (MHz)	Frequency (MHz)	Frequency (GHz)
0.090 - 0.110	16.42 - 16.423	399.9 - 410	4.5 - 5.15
[1] 0.495 - 0.505	16.69475 - 16.69525	608 - 614	5.35 - 5.46
2.1735 - 2.1905	16.80425 - 16.80475	960 - 1240	7.25 - 7.75
4.125 - 4.128	25.5 - 25.67	1300 - 1427	8.025 - 8.5
4.17725 - 4.17775	37.5 - 38.25	1435 - 1626.5	9.0 - 9.2
4.20725 - 4.20775	73 - 74.6	1645.5 - 1646.5	9.3 - 9.5
6.215 - 6.218	74.8 - 75.2	1660 - 1710	10.6 - 12.7
6.26775 - 6.26825	108 - 121.94	1718.8 - 1722.2	13.25 - 13.4
6.31175 - 6.31225	123 - 138	2200 - 2300	14.47 - 14.5
8.291 - 8.294	149.9 - 150.05	2310 - 2390	15.35 - 16.2
8.362 - 8.366	156.52475 - 156.52525	2483.5 - 2500	17.7 - 21.4
8.37625 - 8.38675	156.7 - 156.9	2690 - 2900	22.01 - 23.12
8.41425 - 8.41475	162.0125 - 167.17	3260 - 3267	23.6 - 24.0
12.29 - 12.293	167.72 - 173.2	3332 - 3339	31.2 - 31.8
12.51975 - 12.52025	240 - 285	3345.8 - 3358	36.43 - 36.5
12.57675 - 12.57725	322 - 335.4	3600 - 4400	([2])
13.36 - 13.41	--	--	--

All out of band emissions appearing in a restricted band as specified in Section 15.205 of the Title 47CFR must not exceed the limits shown in Table per Section 15.209.

FCC Part 15 Subpart C Paragraph 15.209		
Frequency [MHz]	Field Strength [uV/m]	Measured Distance [Meters]
0.009 - 0.490	2400/F (kHz)	300
0.490 - 1.705	24000/F (kHz)	30
1.705 - 30	30	30
30 - 88	100	3
88 - 216	150	3
216 - 960	200	3
Above 960	500	3

6.7.2.Test Procedure Used

ANSI C63.10-2013 Section 6.3

ANSI C63.10-2013 Section 6.6

ANSI C63.10-2013 Section 11.13

6.7.3.Test Setting

Peak Field Strength Measurements

1. Analyzer center frequency was set to the frequency of the radiated spurious emission of interest
2. RBW = 1MHz
3. VBW = 3MHz
4. Detector = peak
5. Sweep time = auto couple
6. Trace mode = max hold
7. Trace was allowed to stabilize

Average Field Strength Measurements

1. Analyzer center frequency was set to the frequency of the radiated spurious emission of interest
2. RBW = 1MHz
3. VBW ≥ 1/T
4. As an alternative, the instrument may be set to linear detector mode. Ensure that video filtering is applied in linear voltage domain (rather than in a log or dB domain). Some instruments require linear display mode in order to accomplish this. Others have a setting for Average-VBW Type, which can be set to “Voltage” regardless of the display mode
5. Detector = Peak
6. Sweep time = auto
7. Trace mode = max hold
8. Allow max hold to run for at least 50 times (1/duty cycle) traces

6.7.4.Test Setup

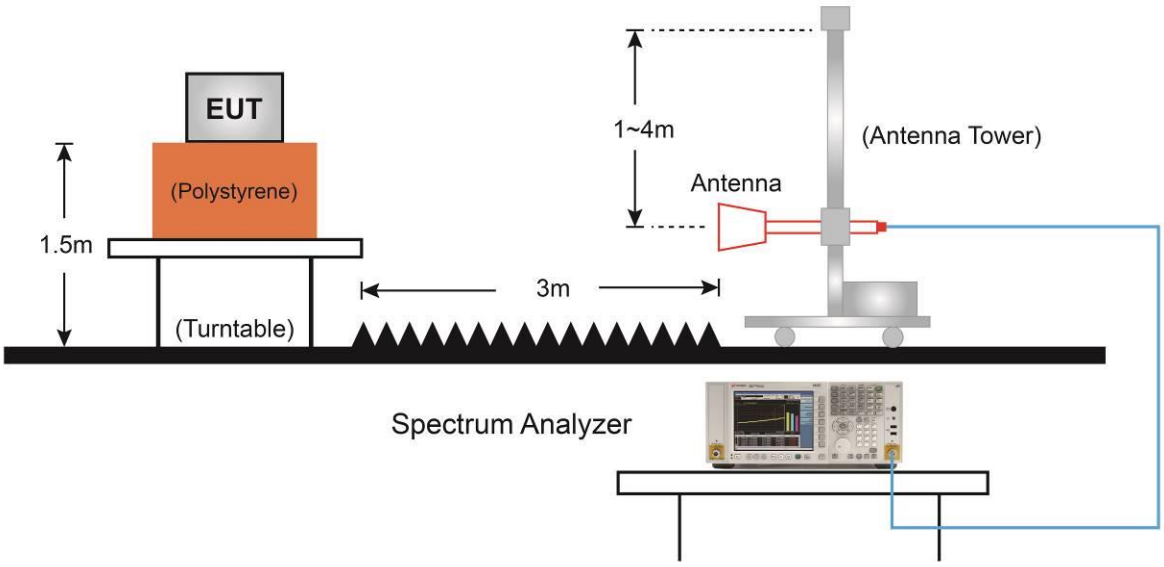

6.7.5.Test Result

Site: SIP-AC3	Time: 2021/03/18 - 10:34
Limit: FCC_Part15_15.209 RE(3m)	Engineer: White Wang
Probe: SIP-AC3_HF907_102861_1-18GHz	Polarity: Horizontal
EUT: Wireless Bodypack Transmitter	Power: By Battery
Test Mode: Transmit by Full BW at channel 2404MHz	

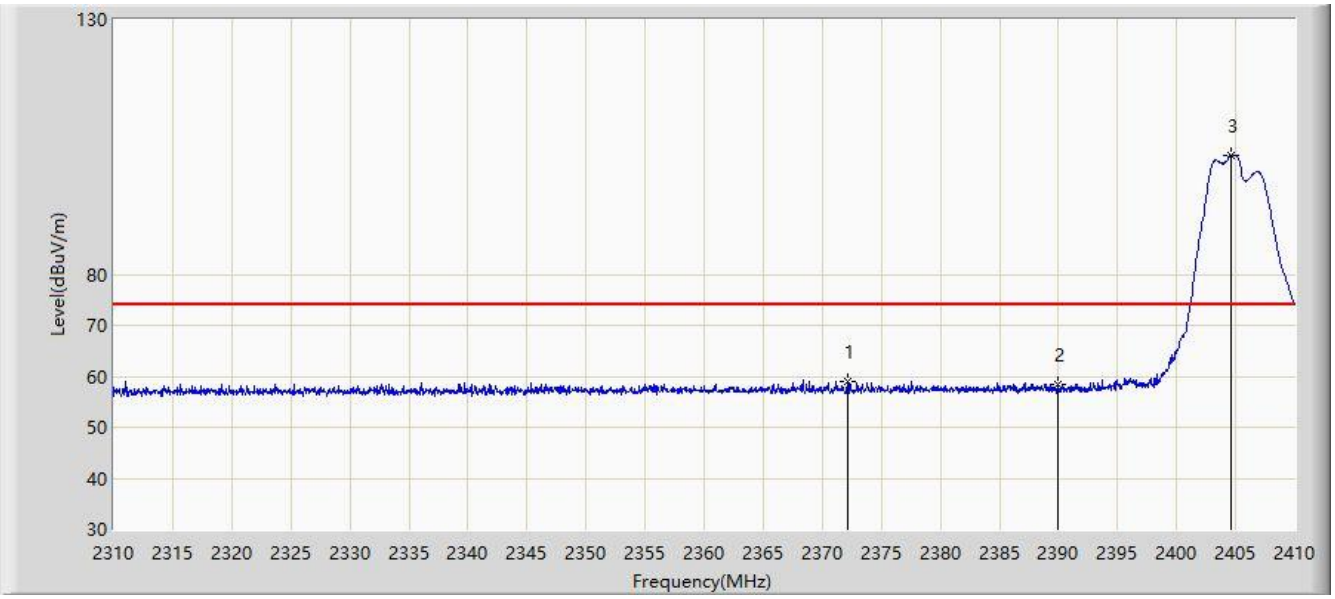

No	Flag	Mark	Frequency (MHz)	Measure Level (dBuV/m)	Reading Level (dBuV)	Margin (dB)	Limit (dBuV/m)	Factor (dB)	Type
1			2372.100	59.000	26.815	-15.000	74.000	32.185	PK
2			2390.000	58.408	26.143	-15.592	74.000	32.265	PK
3		*	2404.600	103.423	71.082	N/A	N/A	32.341	PK

Note: Measure Level (dBμV/m) = Reading Level (dBμV) + Factor (dB)

Factor (dB) = Cable Loss (dB) + Antenna Factor (dB/m).