MEASUREMENT REPORT

FCC PART 15.407

FCC ID:	DD4GLXD1Z3
Applicant:	Shure Incorporated
Application Type:	Certification
Product:	Wireless Bodypack Transmitter
Model No.:	GLXD1+ Z3
Trademark:	SHURE, SHURE®
FCC Classification:	Unlicensed National Information Infrastructure (UNII)
FCC Rule Part(s):	Part15 Subpart E (Section 15.407)
Test Procedure(s):	ANSI C63.10-2013, KDB 789033 D02v02r01
Test Date:	November 22, 2020 ~ April 07, 2021

Reviewed By: Jame Yuan

Approved By: Robin Wu

ACCREDITED
TESTING LABORATORY
CERTIFICATE #3628.01

The test results relate only to the samples tested.
This equipment has been shown to be capable of compliance with the applicable technical standards as indicated in the measurement report and was tested in accordance with the measurement procedures specified in KDB 789033 D02v02r01. Test results reported herein relate only to the item(s) tested.
The test report shall not be reproduced except in full without the written approval of MRT Technology (Suzhou) Co., Ltd.

Revision History

Report No.	Version	Description	Issue Date	Note
2103RSU004-U2	Rev. 01	Initial Report	04-13-2021	Valid

CONTENTS

Description Page

1. General Information 5

1.1. Applicant 5
1.2. Manufacturer 5
1.3. Testing Facility 5

2. PRODUCT INFORMATION 6

2.1. Equipment Description 6
2.2. Radio Specification 6
2.3. Antennas Details 6
2.4. Test Frequencies 7
2.5. Test Mode 7
2.6. Duty Cycle 7
2.7. Description of Test Configuration and Software 8
2.8. EMI Suppression Device(s)/Modifications 8
2.9. Labeling Requirements 8
2.10. Test Environment Condition 8

3. ANTENNA REQUIREMENTS 9

4. TEST EQUIPMENT CALIBRATION DATE 10

5. MEASUREMENT UNCERTAINTY 14

6. TEST RESULT 15

6.1. Summary 15
6.2. Emission Bandwidth Measurement 16
6.2.1. Test Limit 16
6.2.2. Test Procedure Used 16
6.2.3. Test Setting 16
6.2.4. Test Setup 16
6.2.5. Test Result 17
6.3. 6dB Bandwidth Measurement 19
6.3.1. Test Limit 19
6.3.2. Test Procedure Used 19
6.3.3. Test Setting 19
6.3.4. Test Setup 19
6.3.5. Test Result 20
6.4. Output Power Measurement 22
6.4.1. Test Limit 22

6.4.2. Test Procedure Used 22
6.4.3. Test Setting 22
6.4.4. Test Setup 22
6.4.5. Test Result 23
6.5. Power Spectral Density Measurement 24
6.5.1. Test Limit 24
6.5.2. Test Procedure Used 24
6.5.3. Test Setting 24
6.5.4. Test Setup 25
6.5.5. Test Result 26
6.6. Frequency Stability Measurement 28
6.6.1. Test Limit 28
6.6.2. Test Procedure Used 28
6.6.3. Test Setup 29
6.6.4. Test Result 30
6.7. Radiated Spurious Emission Measurement 31
6.7.1. Test Limit 31
6.7.2. Test Procedure Used 31
6.7.3. Test Setting 31
6.7.4. Test Setup 33
6.7.5. Test Result 34
6.8. Radiated Restricted Band Edge Measurement 42
6.8.1. Test Limit 42
6.8.2. Test Procedure Used 43
6.8.3. Test Setting 44
6.8.4. Test Setup 45
6.8.5. Test Result 46
6.9. Duty Cycle Factor Measurement 54
6.9.1. Test Requirement 54
6.9.2. Test Procedures 54
6.9.3. Test Result 56
6.10. AC Conducted Emissions Measurement 57
6.10.1. Test Limit 57
6.10.2. Test Setup 57
6.10.3. Test Result 58

7. CONCLUSION 60

Appendix A - Test Setup Photograph 61

Appendix B - EUT Photograph 62

1. General Information

1.1. Applicant

Shure Incorporated

5800 West Touhy Avenue, Niles, IL 60714-4608, USA

1.2. Manufacturer

Shure Incorporated

5800 West Touhy Avenue, Niles, IL 60714-4608, USA

1.3. Testing Facility

☒	**Test Site – MRT Suzhou Laboratory**	
	Laboratory Location (Suzhou – Wuzhong) D8 Building, No.2 Tian'edang Rd., Wuzhong Economic Development Zone, Suzhou, China **Laboratory Location (Suzhou – SIP)** 4b Building, Liando U Valley, No.200 Xingpu Rd., Shengpu Town, Suzhou Industrial Park, China	
	Laboratory Accreditations	
	A2LA: 3628.01	CNAS: L10551
	FCC: CN1166	ISED: CN0001
	VCCI: R-20025, G-20034, C-20020, T-20020	
☐	**Test Site – MRT Shenzhen Laboratory**	
	Laboratory Location (Shenzhen) 1G, Building A, Junxiangda Building, Zhongshanyuan Road West, Nanshan District, Shenzhen, China	
	Laboratory Accreditations	
	A2LA: 3628.02	CNAS: L10551
	FCC: CN1284	ISED: CN0105
☐	**Test Site – MRT Taiwan Laboratory**	
	Laboratory Location (Taiwan) No. 38, Fuxing 2nd Rd., Guishan Dist., Taoyuan City 333, Taiwan (R.O.C.)	
	Laboratory Accreditations	
	TAF: L3261-190725	
	FCC: 291082, TW3261	ISED: TW3261

2. PRODUCT INFORMATION

2.1. Equipment Description

Product Name	Wireless Bodypack Transmitter
Model No.	GLXD1+ Z3
Test Device Label No.	Radiated Sample: 20210301Sample#19 Conducted Sample: 20210301Sample#21
Radio Specification	2.4GHz & 5.8GHz
Operating Temperature	0 ~ 45 °C
Power Type	AC/DC Adapter or Rechargeable Li-ion Battery Input
Accessories	
AC/DC Adapter	Model No.: SBC10-USB15WSUSTWJ Input Power: 100 - 240V ~ 50/60Hz, 0.6A Output Power: 5VDC 3A
Rechargeable Li-ion Battery	Model No.: SB904 Capacitance: 2420mAh/8.71Wh Rated Voltage: 3.6V

2.2. Radio Specification

Frequency Range	5729 ~ 5846MHz
Bandwidth Mode	Full and Half
Channel Number	55
Channel Spacing	1MHz
Type of Modulation	2-level CPM with Gaussian shaping (basically GFSK)

Note 1: For other features of this EUT, test report will be issued separately.

Note 2: Total working frequencies refer to operation description.

Note 3: All product information is provided by the manufacturer.

2.3. Antennas Details

Antenna Type	Frequency Band (MHz)	Max Peak Gain (dBi)
PIFA Antenna	5729	-0.20
	5788	-0.32
	5846	1.07

Note: All antenna information is provided by the manufacturer.

2.4. Test Frequencies

Operating Bands (MHz)	Test Frequency (MHz)		
	Lowest	Middle	Highest
5729 ~ 5846	5729	5788	5846

2.5. Test Mode

Test Mode	Mode 1: Transmit by Full BW
	Mode 2: Transmit by Half BW

Note: Bandwidth abbreviation is BW.

2.6. Duty Cycle

The maximum achievable duty cycles for all modes were determined based on measurements performed on a spectrum analyzer in zero-span mode with RBW = 8MHz, VBW = 50MHz. The RBW and VBW were both greater than 50/T, where T is the minimum transmission duration, and the number of sweep points across T was greater than 100. The duty cycles are as follows:

Test Mode	Duty Cycle
Full BW	59.39%
Half BW	79.33%

Duty Cycle (T = Transmission Duration)	
Full BW (T =592.8μs)	Half BW (T = 1.190ms)
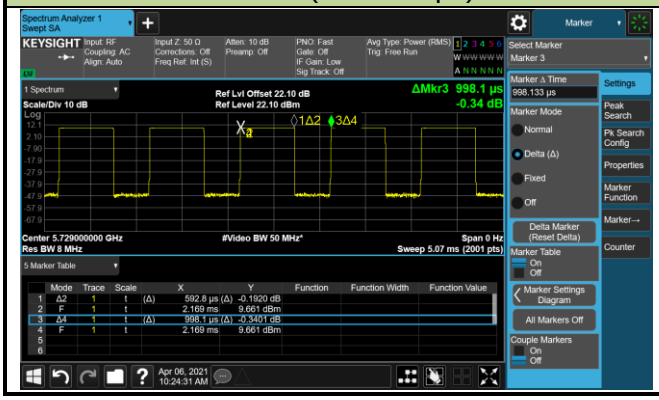	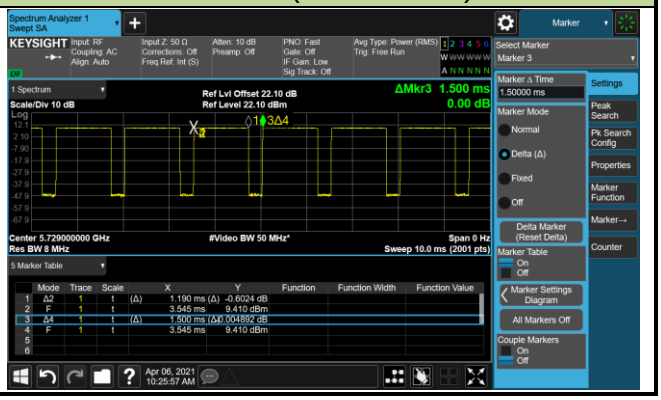

Note: This duty cycle was tested based on continuous transmission of signals via commands.
And it was used to calculate VBW setting during radiated spurious emission and band edge testing.

2.7. Description of Test Configuration and Software

The device was tested per the guidance ANSI C63.10: 2013 that was used to reference the appropriate EUT setup for radiated spurious emissions and AC line conducted emission testing.

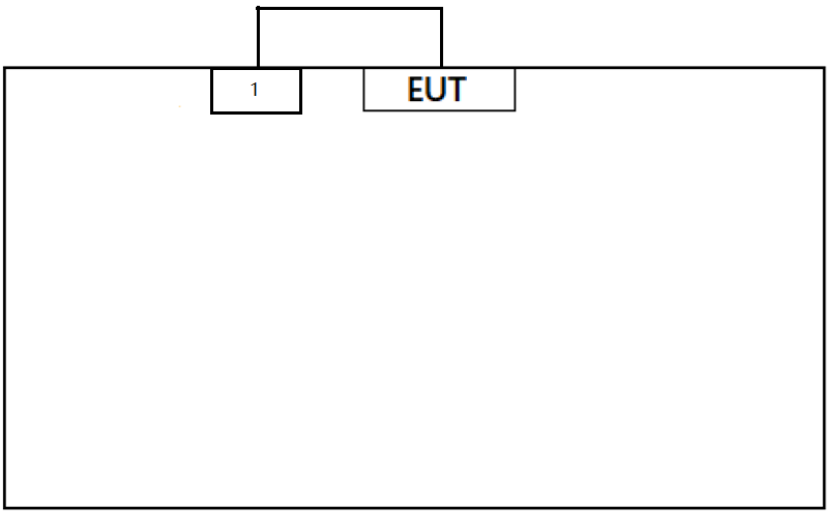

Product		Manufacturer	Model No.
1	Microphone	Shure	95A21105

Note 1: The test utility software used during testing was “QRCT”, and the version was 3.0.268.0.

Note 2: Detail power setting refer to operation description.

2.8. EMI Suppression Device(s)/Modifications

No EMI suppression device(s) were added and/or no modifications were made during testing.

2.9. Labeling Requirements

Per 2.1074 & 15.19; Docket 95-19

The label shall be permanently affixed at a conspicuous location on the device; instruction manual or pamphlet supplied to the user and be readily visible to the purchaser at the time of purchase. However, when the devices so small wherein placement of the label with specified statement is not practical, only the FCC ID must be displayed on the device per Section 15.19(a)(5). Please see attachment for FCC ID label and label location.

2.10. Test Environment Condition

Ambient Temperature	15 ~ 35 °C
Relative Humidity	20 ~ 75 %RH

3. ANTENNA REQUIREMENTS

Excerpt from §15.203 of the FCC Rules/Regulations:

"An intentional radiator antenna shall be designed to ensure that no antenna other than that furnished by the responsible party can be used with the device. The use of a permanently attached antenna or of an antenna that uses a unique coupling to the intentional radiator shall be considered sufficient to comply with the provisions of this section."

- The antenna of the device is **permanently attached.**
- There are no provisions for connection to an external antenna.

Conclusion:

The unit complies with the requirement of §15.203.

4. TEST EQUIPMENT CALIBRATION DATE

Conducted Emission (WZ-SR2)

Instrument	Manufacturer	Type No.	Asset No.	Cali. Interval	Cali. Due Date
EMI Test Receiver	R&S	ESR3	MRTSUE06185	1 year	2022/01/12
Two-Line V-Network	R&S	ENV216	MRTSUE06002	1 year	2021/09/09
Thermal Hygrometer	testo	608-H1	MRTSUE06404	1 year	2021/07/26
Shielding Room	MIX-BEP	Chamber-SR2	MRTSUE06215	N/A	N/A

Conducted Emission (SIP-SR2)

Instrument	Manufacturer	Type No.	Asset No.	Cali. Interval	Cali. Due Date
EMI Test Receiver	R&S	ESR3	MRTSUE06613	1 year	2021/07/02
Two-Line V-Network	R&S	ENV216	MRTSUE06003	1 year	2021/09/09
Thermal Hygrometer	testo	608-H1	MRTSUE06621	1 year	2021/12/03

Radiated Emission (WZ-AC1)

Instrument	Manufacturer	Type No.	Asset No.	Cali. Interval	Cali. Due Date
EMI Test Receiver	R&S	ESR7	MRTSUE06001	1 year	2022/01/12
PXA Signal Analyzer	Keysight	N9030B	MRTSUE06395	1 year	2021/08/30
Loop Antenna	Schwarzbeck	FMZB 1519	MRTSUE06025	1 year	2021/10/22
Bilog Period Antenna	Schwarzbeck	VULB 9168	MRTSUE06172	1 year	2021/08/08
Horn Antenna	Schwarzbeck	BBHA 9120D	MRTSUE06023	1 year	2021/09/27
Horn Antenna	Schwarzbeck	BBHA9170	MRTSUE06597	1 year	2021/12/14
Microwave System Amplifier	Agilent	83017A	MRTSUE06076	1 year	2021/11/14
Preamplifier	Schwarzbeck	BBV 9721	MRTSUE06121	1 year	2021/06/11
Thermal Hygrometer	testo	608-H1	MRTSUE06403	1 year	2021/07/26
Anechoic Chamber	TDK	Chamber-AC1	MRTSUE06212	1 year	2021/04/30

Radiated Emission (WZ-AC2)

Instrument	Manufacturer	Type No.	Asset No.	Cali. Interval	Cali. Due Date
MXE EMI Receiver	Keysight	N9038A	MRTSUE06125	1 year	2021/07/02
Loop Antenna	Schwarzbeck	FMZB 1519	MRTSUE06025	1 year	2021/10/22
Bilog Period Antenna	Schwarzbeck	VULB 9162	MRTSUE06022	1 year	2021/05/26
Broad-Band Horn Antenna	Schwarzbeck	BBHA 9120D	MRTSUE06171	1 year	2021/10/25
Horn Antenna	Schwarzbeck	BBHA9170	MRTSUE06597	1 year	2021/12/14
Broadband Coaxial Preamplifier	Schwarzbeck	BBV 9718	MRTSUE06176	1 year	2021/11/14
Preamplifier	Schwarzbeck	BBV 9721	MRTSUE06121	1 year	2021/06/11
Thermal Hygrometer	Minggao	ETH529	MRTSUE06170	1 year	2021/12/08
Anechoic Chamber	RIKEN	Chamber-AC2	MRTSUE06213	1 year	2021/04/30

Radiated Emission (SIP-AC1)

Instrument	Manufacturer	Type No.	Asset No.	Cali. Interval	Cali. Due Date
EMI Test Receiver	R&S	ESR3	MRTSUE06612	1 year	2021/07/02
EXA Signal Analyzer	Keysight	N9010B	MRTSUE06559	1 year	2021/07/23
Loop Antenna	Schwarzbeck	FMZB 1519	MRTSUE06025	1 year	2021/10/22
Bilog Period Antenna	Schwarzbeck	VULB9168	MRTSUE06645	1 year	2021/08/30
Double Ridged Horn Antenna	R&S	HF907	MRTSUE06610	1 year	2021/08/30
Preamplifier	EMCI	EMC051845SE	MRTSUE06600	1 year	2021/11/09
Thermal Hygrometer	testo	608-H1	MRTSUE06620	1 year	2021/12/03
Anechoic Chamber	RIKEN	SIP-SIP-AC1	MRTSUE06554	1 year	2021/12/24

Radiated Emission (SIP-AC2)

Instrument	Manufacturer	Type No.	Asset No.	Cali. Interval	Cali. Due Date
EMI Test Receiver	R&S	ESR3	MRTSUE06613	1 year	2021/07/02
MXA Signal Analyzer	Keysight	N9020B	MRTSUE06604	1 year	2021/09/26
Loop Antenna	Schwarzbeck	FMZB 1519	MRTSUE06025	1 year	2021/10/22
Bilog Period Antenna	Schwarzbeck	VULB9168	MRTSUE06646	1 year	2021/08/30
Horn Antenna	Schwarzbeck	BBHA9120D	MRTSUE06648	1 year	2021/11/26
Horn Antenna	Schwarzbeck	BBHA9170	MRTSUE06599	1 year	2021/11/26
Preamplifier	EMCI	EMC051845SE	MRTSUE06644	1 year	2021/11/09
Preamplifier	EMCI	EMC184045SE	MRTSUE06602	1 year	2021/10/12
Thermal Hygrometer	testo	608-H1	MRTSUE06624	1 year	2021/12/03
Anechoic Chamber	RIKEN	SIP-AC2	MRTSUE06781	1 year	2021/12/24

Radiated Emission (SIP-AC3)

Instrument	Manufacturer	Type No.	Asset No.	Cali. Interval	Cali. Due Date
EMI Test Receiver	R&S	ESR3	MRTSUE06612	1 year	2021/07/02
EXA Signal Analyzer	Keysight	N9010B	MRTSUE06559	1 year	2021/07/23
Loop Antenna	Schwarzbeck	FMZB 1519	MRTSUE06025	1 year	2021/10/22
Bilog Period Antenna	Schwarzbeck	VULB9168	MRTSUE06647	1 year	2021/08/08
Double Ridged Horn Antenna	R&S	HF907	MRTSUE06611	1 year	2021/09/13
Horn Antenna	Schwarzbeck	BBHA9170	MRTSUE06598	1 year	2021/11/26
Preamplifier	EMCI	EMC012645SE	MRTSUE06642	1 year	2022/01/15
Preamplifier	EMCI	EMC184045SE	MRTSUE06641	1 year	2022/01/15
Thermal Hygrometer	testo	608-H1	MRTSUE06622	1 year	2021/12/03
Anechoic Chamber	RIKEN	SIP-AC3	MRTSUE06782	1 year	2021/12/24

Conducted Test Equipment (WZ-TR3)

Instrument	Manufacturer	Type No.	Asset No.	Cali. Interval	Cali. Due Date
EXA Signal Analyzer	Agilent	N9020A	MRTSUE06106	1 year	2021/04/14
EXA Signal Analyzer	Keysight	N9010B	MRTSUE06607	1 year	2022/01/07
Signal Analyzer	R&S	FSV40	MRTSUE06218	1 year	2021/04/14
Power Meter	Agilent	U2021XA	MRTSUE06030	1 year	2021/10/22
USB wideband power sensor	Keysight	U2021XA	MRTSUE06446	1 year	2021/08/30
USB wideband power sensor	Keysight	U2021XA	MRTSUE06447	1 year	2021/08/08
Bluetooth Test Set	Anritsu	MT8852B-042	MRTSUE06389	1 year	2021/06/11
Audio Analyzer	Agilent	U8903B	MRTSUE06143	1 year	2021/06/11
Modulation Analyzer	HP	HP8901A	MRTSUE06098	1 year	2021/09/26
Wideband Radio Communication Tester	R&S	CMW 500	MRTSUE06243	1 year	2021/10/20
DC Power Supply	GWINSTEK	DPS-3303C	MRTSUE06064	N/A	N/A
Temperature & Humidity Chamber	BAOYT	BYH-150CL	MRTSUE06051	1 year	2021/10/22
Thermal Hygrometer	testo	608-H1	MRTSUE06401	1 year	2021/07/26
Attenuator	MVE	6dB	MRTSUE06534	1 year	N/A
Attenuator	MVE	10dB	MRTSUE06543	1 year	N/A

Conducted Test Equipment (SIP-SR5)

Instrument	Manufacturer	Type No.	Asset No.	Cali. Interval	Cali. Due Date
Signal Analyzer	R&S	FSV40	MRTSUE06218	1 year	2021/04/14
PXA Signal Analyzer	Keysight	N9030B	MRTSUE06395	1 year	2021/08/30
USB wideband power sensor	Agilent	U2021XA	MRTSUE06595	1 year	2021/09/26
USB wideband power sensor	Agilent	U2021XA	MRTSUE06596	1 year	2021/09/26
Wideband Radio Communication Tester	R&S	CMW 500	MRTSUE06243	1 year	2021/10/20
Bluetooth Test Set	Anritsu	MT8852B-042	MRTSUE06389	1 year	2021/06/11
Temperature Chamber	BAOYT	BYG-408CS	MRTSUE06847	1 year	2022/02/23
Thermal Hygrometer	testo	622	MRTSUE06629	1 year	2021/11/25
Attenuator	MVE	6dB	MRTSUE06534	1 year	N/A
Attenuator	MVE	10dB	MRTSUE06543	1 year	N/A

Software	Version	Function
EMI Software	V3	EMI Test Software

5. MEASUREMENT UNCERTAINTY

Where relevant, the following test uncertainty levels have been estimated for tests performed on the EUT as specified in CISPR 16-4-2. This uncertainty represents an expanded uncertainty expressed at approximately the 95% confidence level using a coverage factor of k = 2.

AC Conducted Emission Measurement
Measurement Uncertainty for a Level of Confidence of 95% (U=2Uc(y)): 9kHz~150kHz: 3.74dB 150kHz~30MHz: 3.44dB
Radiated Disturbance
Measurement Uncertainty for a Level of Confidence of 95% (U=2Uc(y)): Horizontal: 30MHz~300MHz: 5.04dB 300MHz~1GHz: 4.95dB 1GHz~40GHz: 6.40dB Vertical: 30MHz~300MHz: 5.24dB 300MHz~1GHz: 6.03dB 1GHz~40GHz: 6.40dB
Spurious Emissions, Conducted
Measuring Uncertainty for a Level of Confidence of 95% (U=2Uc(y)): 0.78dB
Output Power
Measuring Uncertainty for a Level of Confidence of 95% (U=2Uc(y)): 1.13dB
Power Spectrum Density
Measuring Uncertainty for a Level of Confidence of 95% (U=2Uc(y)): 1.15dB
Occupied Bandwidth
Measuring Uncertainty for a Level of Confidence of 95% (U=2Uc(y)): 0.28%

6. TEST RESULT

6.1. Summary

FCC Section(s)	Test Description	Test Limit	Test Condition	Test Result	Reference
15.407(a)	26dB Bandwidth	N/A	Conducted	N/A	Section 6.2
15.407(e)	6dB Bandwidth	≥ 500kHz		Pass	Section 6.3
15.407(a) (3)	Maximum Conducted Output Power	≤1W		Pass	Section 6.4
15.407(a) (3)	Power Spectral Density	≤30dBm/500kHz		Pass	Section 6.5
15.407(g)	Frequency Stability	N/A		N/A	Section 6.6
15.407(b) (4)(i)	Undesirable Emissions	≤ -27dBm/MHz EIRP Detail see section 6.8	Radiated	Pass	Section 6.7 Section 6.8
15.205, 15.209 15.407(b)(5), (6), (7)	General Field Strength (Restricted Bands and Radiated Emission)	Emissions in restricted bands must meet the radiated limits detailed in15.209		Pass	
15.35(c)	Duty Cycle Factor	N/A		N/A	Section 6.9
15.207	AC Conducted Emissions 150kHz-30MHz	< FCC 15.207 limits	Line Conducted	Pass	Section 6.10

Notes:

1) The analyzer plots shown in this section were all taken with a correction table loaded into the analyzer. The correction table was used to account for the losses of the cables and attenuators used as part of the system to connect the EUT to the analyzer at all frequencies of interest.
2) All modes of operation and data rates were investigated. For radiated emission test, every axis (X, Y, Z) was also verified. The test results shown in the following sections represent the worst case emissions.
3) “N/A” means that the test item is not applicable, and the details refer to relevant section.

6.2. Emission Bandwidth Measurement

6.2.1.Test Limit

N/A

6.2.2.Test Procedure Used

KDB 789033 D02v02r01 -Section C.1

6.2.3.Test Setting

1. Set RBW = approximately 1% of the emission bandwidth.
2. Set the VBW > RBW.
3. Detector = Peak.
4. Trace mode = max hold.
5. Measure the maximum width of the emission that is 26 dB down from the maximum of the emission. Compare this with the RBW setting of the analyzer. Readjust RBW and repeat measurement as needed until the RBW/EBW ratio is approximately 1%.

6.2.4.Test Setup

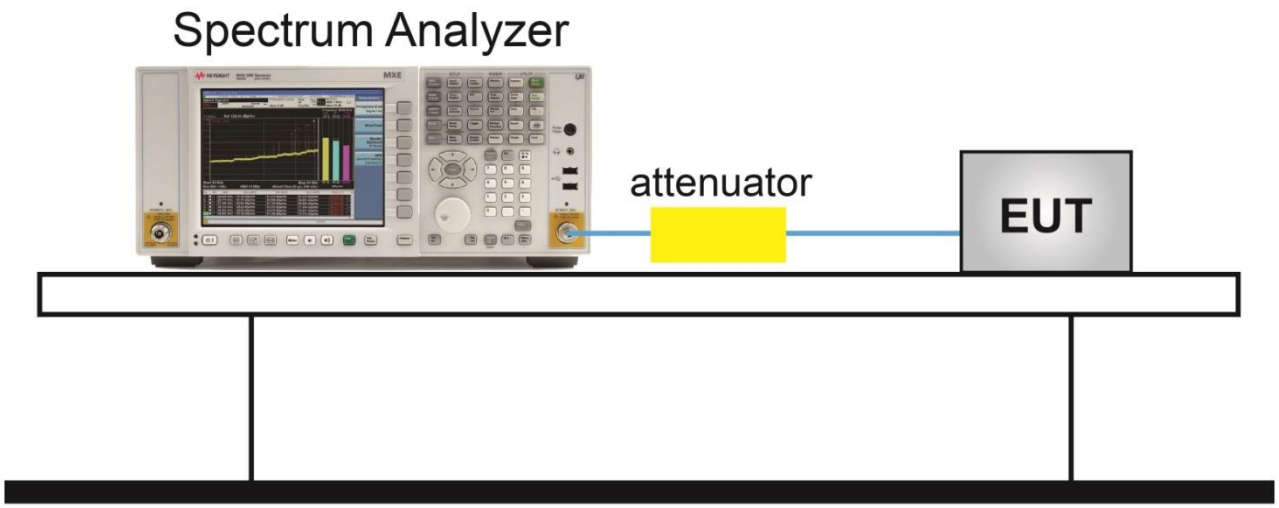

6.2.5.Test Result

Test Site	SIP-SR5	Test Engineer	Alisa Deng
Test Date	2021/04/06		

Test Mode	Frequency (MHz)	26dB Bandwidth (MHz)
Full BW	5729	4.00
Full BW	5788	4.00
Full BW	5846	4.00
Half BW	5729	2.00
Half BW	5788	2.00
Half BW	5846	2.00

Full BW 26dB Bandwidth

Channel 149 (5729MHz)

Channel 157 (5788MHz)

Channel 165 (5846MHz)

Half BW 26dB Bandwidth

Channel 149 (5729MHz)

Channel 157 (5788MHz)

Channel 165 (5846MHz)

6.3. 6dB Bandwidth Measurement

6.3.1.Test Limit

The minimum 6dBbandwidth shall be at least 500 kHz.

6.3.2.Test Procedure Used

KDB 789033 D02v02r01 - Section C.2

6.3.3.Test Setting

1. Set center frequency to the nominal EUT channel center frequency.
2. RBW = 100 kHz.
3. VBW≥ 3 × RBW.
4. Detector = Peak.
5. Trace mode = Max hold.
6. Sweep = Auto couple.
7. Allow the trace to stabilize.
8. Measure the maximum width of the emission that is constrained by the frequencies associated with the two outermost amplitude points (upper and lower frequencies) that are attenuated by 6 dB relative to the maximum level measured in the fundamental emission.

6.3.4.Test Setup

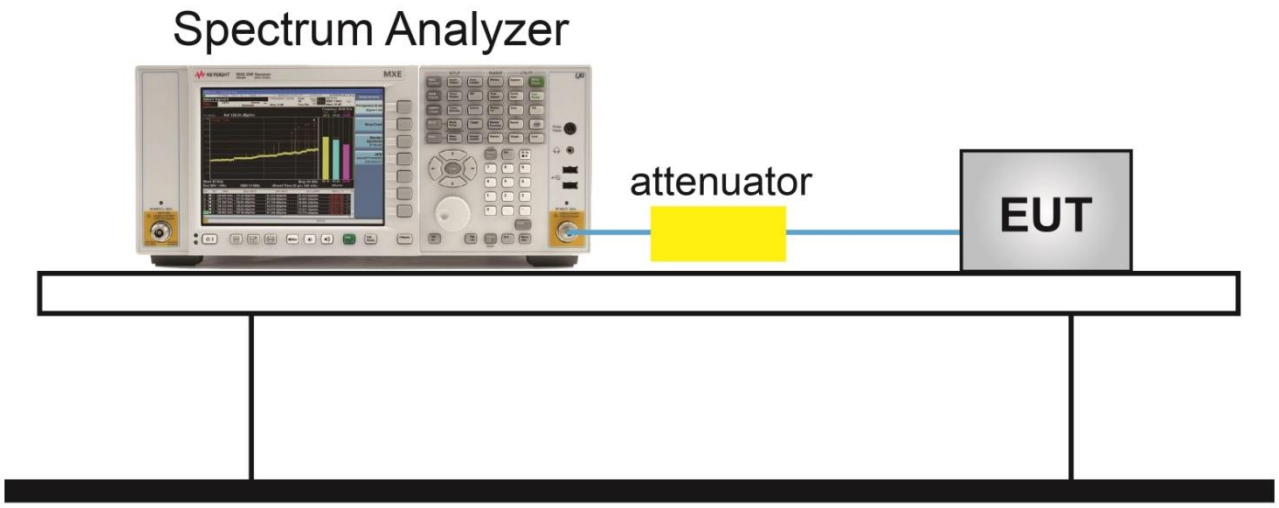

6.3.5.Test Result

Test Site	SIP-SR5	Test Engineer	Alisa Deng
Test Date	2021/04/06		

Test Mode	Frequency (MHz)	6dB Bandwidth (MHz)	Limit (MHz)	Result
Full BW	5729	1.983	≥ 0.5	Pass
Full BW	5788	1.983	≥ 0.5	Pass
Full BW	5846	1.983	≥ 0.5	Pass
Half BW	5729	1.025	≥ 0.5	Pass
Half BW	5788	1.029	≥ 0.5	Pass
Half BW	5846	1.026	≥ 0.5	Pass

Full BW 6dB Bandwidth

Channel 149 (5729MHz)

Channel 157 (5788MHz)

Channel 165 (5846MHz)

Half BW 6dB Bandwidth

Channel 149 (5729MHz)

Channel 157 (5788MHz)

Channel 165 (5846MHz)

6.4. Output Power Measurement

6.4.1.Test Limit

For the band 5.725-5.85 GHz, the maximum conducted output power over the frequency band of operation shall not exceed 1 W (30dBm).

If transmitting antennas of directional gain greater than 6dBi are used, the maximum conducted output power shall be reduced by the amount in dB that the directional gain of the antenna exceeds 6dBi.

6.4.2.Test Procedure Used

KDB 789033D02v02r01- Section E)3)b) Method PM-G

6.4.3.Test Setting

Average power measurements were perform only when the EUT was transmitting at its maximum power control level using a broadband power meter with a pulse sensor. The power meter implemented triggering and gating capabilities which were set up such that power measurements were recorded only during the ON time of the transmitter.

6.4.4.Test Setup

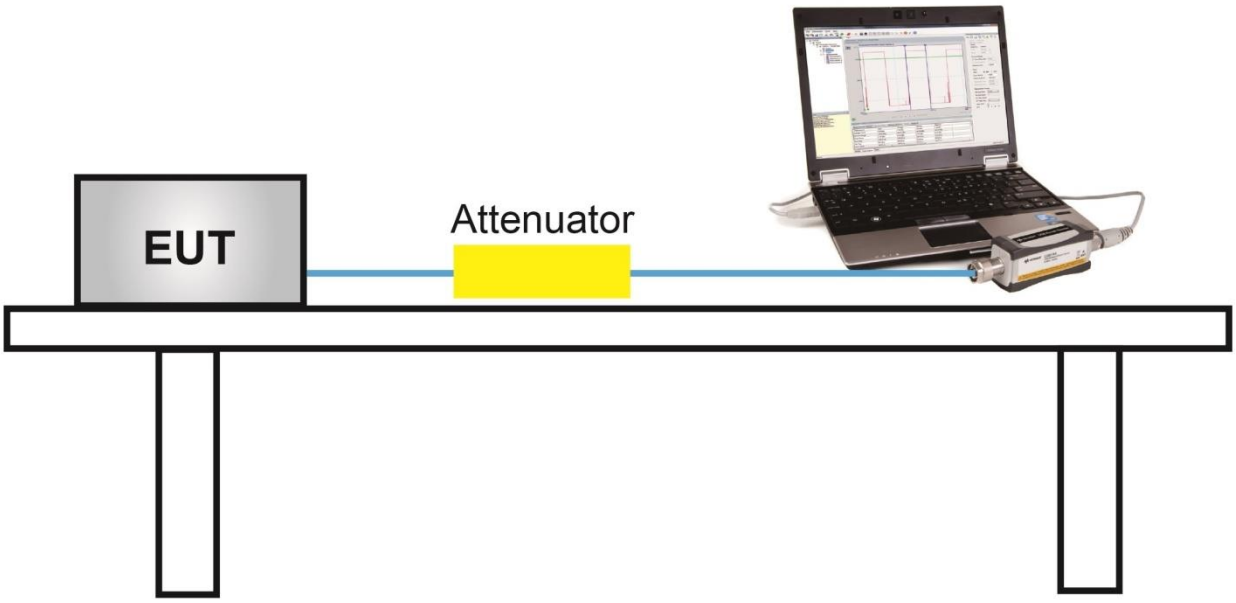

6.4.5.Test Result

Test Site	SIP-SR5	Test Engineer	Alisa Deng
Test Date	2021/03/24		

Test Mode	Freq. (MHz)	Average Power (dBm)	Average Power Limit (dBm)	Result
Full BW	5729	9.92	≤ 30.00	Pass
Full BW	5788	9.76	≤ 30.00	Pass
Full BW	5846	8.83	≤ 30.00	Pass
Half BW	5729	9.73	≤ 30.00	Pass
Half BW	5788	9.58	≤ 30.00	Pass
Half BW	5846	8.57	≤ 30.00	Pass

6.5. Power Spectral Density Measurement

6.5.1.Test Limit

For the band 5.725-5.85 GHz, the maximum power spectral density shall not exceed 30 dBm in any 500-kHz band.

If transmitting antennas of directional gain greater than 6dBi are used, the peak power spectral density shall be reduced by the amount in dB that the directional gain of the antenna exceeds 6dBi.

6.5.2.Test Procedure Used

KDB 789033 D02v02r01 - Section F

6.5.3.Test Setting

1. Analyzer was set to the center frequency of the UNII channel under investigation
2. Span was set to encompass the entire 26dB EBW of the signal.
   RBW = 510kHz
   VBW = 1.5MHz
3. Number of sweep points ≥ 2 × (span / RBW)
4. Detector = Power averaging (Average)
5. Trace average at least 100 traces in power averaging (rms) mode
6. Sweep time = Auto
7. Trigger = Free run
8. Use the peak search function on the instrument to find the peak of the spectrum and record its value.
9. Add 10*log(1/x), where x is the duty cycle, to the measured power in order to compute the average power during the actual transmission times (because the measurement represents an average over both the on and off times of the transmission). For example, add 10*log(1/0.25) = 6 dB if the duty cycle is 25 percent.

6.5.4.Test Setup

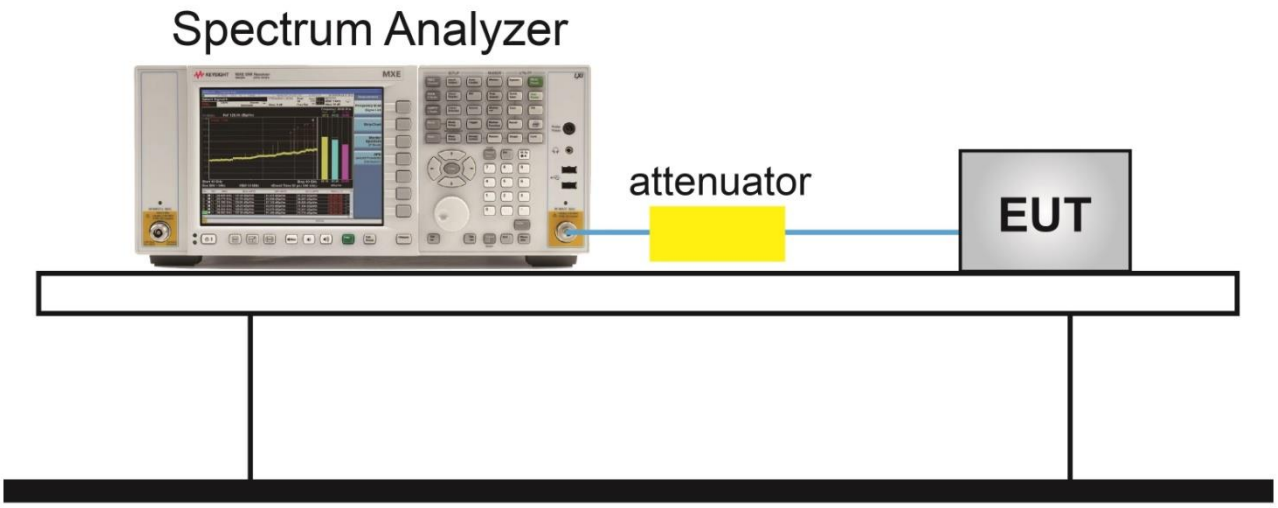

6.5.5.Test Result

Test Site	SIP-SR5	Test Engineer	Alisa Deng
Test Date	2021/04/06	Test Item	Power Spectral Density

Test Mode	Freq. (MHz)	Duty Cycle (%)	PSD (dBm/ 500kHz)	Final PSD (dBm/ 500kHz)	Limit (dBm/ 500kHz)	Result
Full BW	5729	59.39	2.24	4.50	≤ 30.00	Pass
Full BW	5788	59.39	2.46	4.72	≤ 30.00	Pass
Full BW	5846	59.39	2.16	4.42	≤ 30.00	Pass
Half BW	5729	79.33	5.70	6.71	≤ 30.00	Pass
Half BW	5788	79.33	6.09	7.10	≤ 30.00	Pass
Half BW	5846	79.33	4.96	5.96	≤ 30.00	Pass

Note:

When EUT duty cycle > 98%, Final PSD (dBm / 500kHz) = PSD (dBm / 500kHz).

When EUT duty cycle < 98%, Final PSD (dBm / 500kHz) = PSD (dBm / 500kHz) + 10*log(1/Duty cycle)

Full BW Power Spectral Density

Channel 149 (5729MHz)

Channel 157 (5788MHz)

Channel 165 (5846MHz)

Half BW Power Spectral Density

Channel 149 (5729MHz)

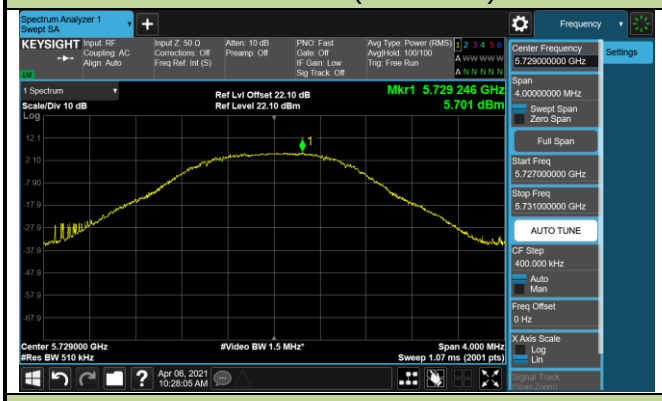

Channel 157 (5788MHz)

Channel 165 (5846MHz)

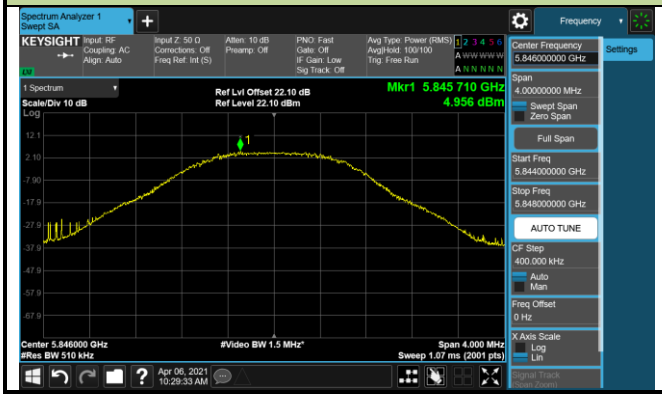

6.6. Frequency Stability Measurement

6.6.1.Test Limit

Manufactures of U-NII devices are responsible for ensuring frequency stability such that an emission is maintained within the band of operation under all conditions of normal operation as specified in the user's manual.

6.6.2.Test Procedure Used

Frequency Stability Under Temperature Variations:

The equipment under test was connected to an external AC or DC power supply and input rated voltage. RF output was connected to a frequency counter or spectrum analyzer via feed through attenuators. The EUT was placed inside the temperature chamber. Set the spectrum analyzer RBW low enough to obtain the desired frequency resolution and measure EUT 20°C operating frequency as reference frequency. Turn EUT off and set the chamber temperature to highest. After the temperature stabilized for approximately 30 minutes recorded the frequency. Repeat step measure with 10°C decreased per stage until the lowest temperature reached.

Frequency Stability Under Voltage Variations:

Set chamber temperature to 20°C. Use a variable AC power supply / DC power source to power the EUT and set the voltage to rated voltage. Set the spectrum analyzer RBW low enough to obtain the desired frequency resolution and recorded the frequency.

Reduce the input voltage to specify extreme voltage variation (±15%) and endpoint, record the maximum frequency change. For hand-carried battery-powered equipment, primary supply voltage is reduced to the battery operating end point which shall be specified by the manufacturer.

6.6.3.Test Setup

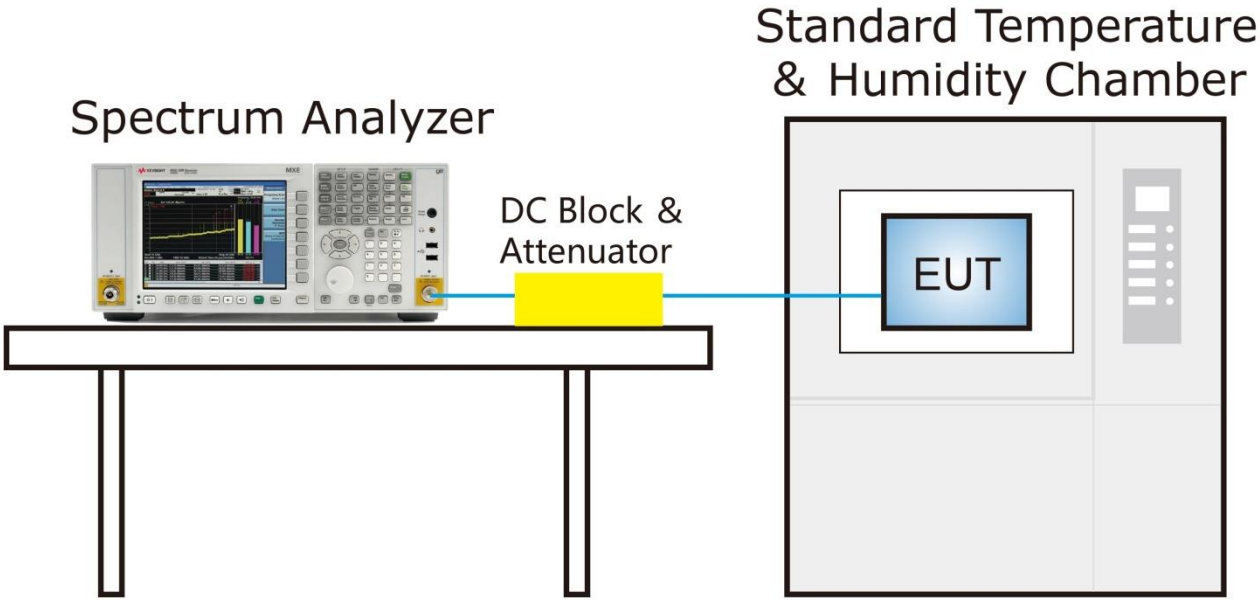

6.6.4.Test Result

Test Site	SIP-SR5	Test Engineer	Alisa Deng
Test Date	2021/04/06	Test Mode	5729MHz (Carrier Mode)

Voltage (%)	Power (V_{DC})	Temp (°C)	Frequency Tolerance (ppm)			
			0 minutes	2 minutes	5 minutes	10 minutes
100%	3.60	- 30	-3.51	-3.37	-3.40	-3.38
		- 20	-3.08	-3.03	-3.16	-3.13
		- 10	-2.46	-2.34	-2.31	-2.32
		0	-2.59	-2.79	-2.83	-2.79
		+ 10	-3.66	-3.59	-3.55	-3.60
		+ 20	-5.02	-5.03	-5.00	-4.91
		+ 30	-7.02	-6.85	-7.02	-7.09
		+ 40	-8.58	-8.70	-8.75	-8.65
		+ 50	-9.04	-9.10	-9.13	-9.00
Battery Endpoint	3.06	+ 20	-5.77	-5.77	-5.62	-5.55

Note 1: Frequency Tolerance (ppm) = {[Measured Frequency (MHz) - Declared Frequency (MHz)] / Declared Frequency (MHz)} $*10^6$.

Note 2: Battery upper voltage is 3.6Vdc, battery endpoint voltage is 3.06Vdc, which are declared by the manufacturer.

6.7. Radiated Spurious Emission Measurement

6.7.1.Test Limit

All out of band emissions appearing in a restricted band as specified in Section 15.205 of the Title 47 CFR must not exceed the limits shown in Table per Section 15.209.

FCC Part 15 Subpart C Paragraph 15.209		
Frequency (MHz)	Field Strength (μV/m)	Measured Distance (m)
0.009 - 0.490	2400/F (kHz)	300
0.490 - 1.705	24000/F (kHz)	30
1.705 - 30	30	30
30 - 88	100	3
88 - 216	150	3
216 - 960	200	3
Above 960	500	3

6.7.2.Test Procedure Used

KDB 789033 D02v02r01- Section G

6.7.3.Test Setting

Table 1 - RBW as a function of frequency

Frequency	RBW
9 ~ 150 kHz	200 ~ 300 Hz
0.15 ~ 30 MHz	9 ~ 10 kHz
30 ~ 1000 MHz	100 ~ 120 kHz
> 1000 MHz	1 MHz

Quasi-Peak Measurements below 1GHz

1. Analyzer center frequency was set to the frequency of the radiated spurious emission of interest
2. Span was set greater than 1MHz
3. RBW = as specified in Table 1
4. Detector = CISPR quasi-peak
5. Sweep time = auto couple
6. Trace was allowed to stabilize

Peak Measurements above 1GHz

1. Analyzer center frequency was set to the frequency of the radiated spurious emission of interest
2. RBW = 1MHz
3. VBW = 3MHz
4. Detector = peak
5. Sweep time = auto couple
6. Trace mode = max hold
7. Trace was allowed to stabilize

Average Measurements above 1GHz (Method VB)

1. Analyzer center frequency was set to the frequency of the radiated spurious emission of interest
2. RBW = 1MHz
3. VBW;If the EUT is configured to transmit with duty cycle ≥ 98%, set VBW = 10Hz

   If the EUT duty cycle is < 98%, set VBW ≥ 1/T. T is the minimum transmission duration
4. Detector = Peak
5. Sweep time = auto
6. Trace mode = max hold
7. Trace was allowed to stabilize

6.7.4.Test Setup

Below 1GHz Test Setup:

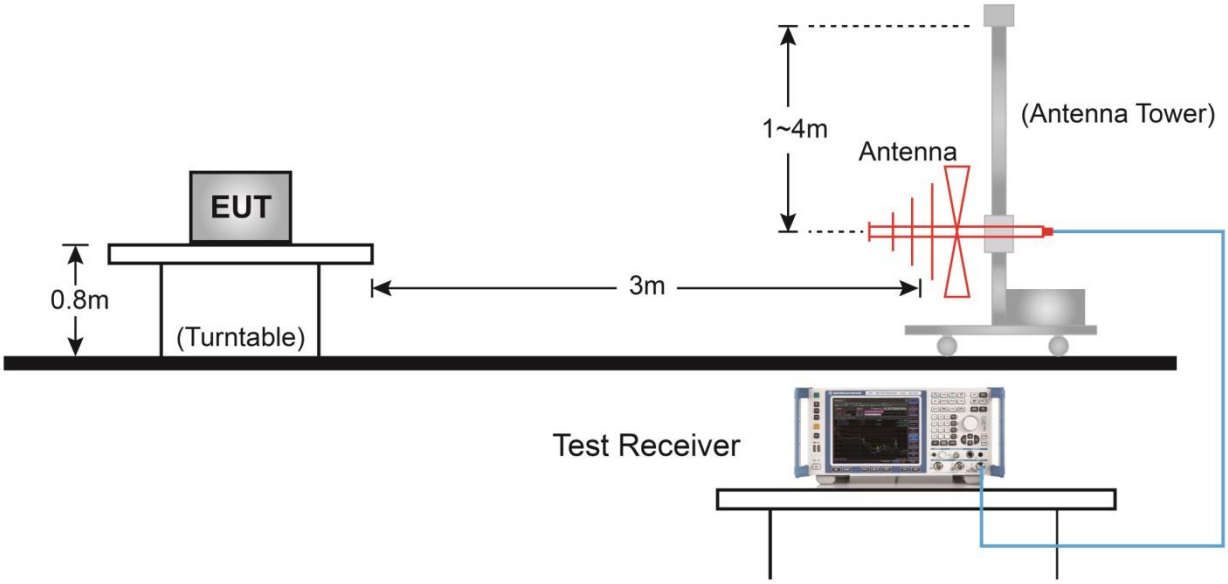

Above1GHz Test Setup:

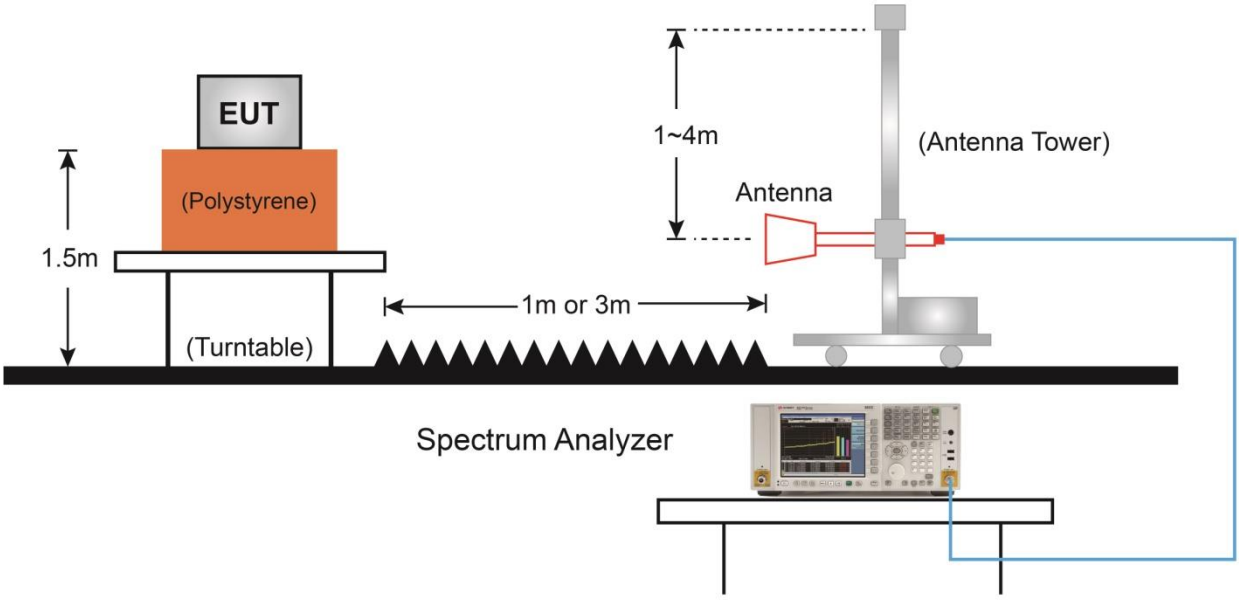

6.7.5.Test Result

Test Site	SIP-AC1	Test Engineer	Stephen Dong
Test Date	2020/11/21~2021/11/24	Test Frequency	5729MHz
Test Mode	Full BW		
Remark	1. Average measurement was not performed if peak level lower than average limit. 2. Other frequency was 20dB below limit line within 1-18GHz, there is not show in the report.		

Mark	Frequency (MHz)	Reading Level (dBμV)	Factor (dB)	Measure Level (dBμV/m)	Limit (dBμV/m)	Margin (dB)	Detector	Polarization
*	14455.5	50.8	-0.5	50.3	68.2	-17.9	Peak	Horizontal
	15849.5	47.4	2.1	49.5	74	-24.5	Peak	Horizontal
*	17090.5	47.7	4.0	51.7	68.2	-16.5	Peak	Horizontal
	17847.0	47.6	4.6	52.2	74	-21.8	Peak	Horizontal
	15900.5	49.2	1.4	50.6	74	-23.4	Peak	Vertical
*	16555.0	48.5	2.8	51.3	68.2	-16.9	Peak	Vertical
*	17192.5	47.7	4.1	51.8	68.2	-16.4	Peak	Vertical
	18000.0	47.3	5.1	52.4	74	-21.6	Peak	Vertical

Test Mode 1: “*” is not in restricted band, its limit is -27dBm/MHz. At a distance of 3 meters, the field strength limit in dBμV/m can be determined by adding a “conversion” factor of 95.2dB to the EIRP limit of -27dBm/MHz to obtain the limit for out of band spurious emissions.

Test Mode 2: Measure Level (dBμV/m) = Reading Level (dBμV) + Factor (dB)

Factor (dB) = Cable Loss (dB) + Antenna Factor (dB/m) - Pre_Amplifier Gain (dB)

Test Site	SIP-AC1	Test Engineer	Stephen Dong
Test Date	2020/11/21~2021/11/24	Test Frequency	5788MHz
Test Mode	Full BW		
Remark	1. Average measurement was not performed if peak level lower than average limit. 2. Other frequency was 20dB below limit line within 1-18GHz, there is not show in the report.		

Mark	Frequency (MHz)	Reading Level (dBμV)	Factor (dB)	Measure Level (dBμV/m)	Limit (dBμV/m)	Margin (dB)	Detector	Polarization
*	14770.0	49.7	0.3	50.0	68.2	-18.2	Peak	Horizontal
	15849.5	47.9	2.1	50.0	74	-24.0	Peak	Horizontal
*	17184.0	48.2	4.0	52.2	68.2	-16.0	Peak	Horizontal
	17889.5	47.5	4.8	52.3	74	-21.7	Peak	Horizontal
	15764.5	47.6	2.1	49.7	74	-24.3	Peak	Vertical
*	16215.0	48.9	1.6	50.5	68.2	-17.7	Peak	Vertical
*	17175.5	47.9	4.0	51.9	68.2	-16.3	Peak	Vertical
	17898.0	47.5	4.9	52.4	74	-21.6	Peak	Vertical

Test Mode 1: “*” is not in restricted band, its limit is -27dBm/MHz. At a distance of 3 meters, the field strength limit in dBμV/m can be determined by adding a “conversion” factor of 95.2dB to the EIRP limit of -27dBm/MHz to obtain the limit for out of band spurious emissions.

Test Mode 2: Measure Level (dBμV/m) = Reading Level (dBμV) + Factor (dB)

Factor (dB) = Cable Loss (dB) + Antenna Factor (dB/m) - Pre_Amplifier Gain (dB)

Test Site	SIP-AC1	Test Engineer	Stephen Dong
Test Date	2020/11/21~2021/11/24	Test Frequency	5846MHz
Test Mode	Full BW		
Remark	1. Average measurement was not performed if peak level lower than average limit. 2. Other frequency was 20dB below limit line within 1-18GHz, there is not show in the report.		

Mark	Frequency (MHz)	Reading Level (dBμV)	Factor (dB)	Measure Level (dBμV/m)	Limit (dBμV/m)	Margin (dB)	Detector	Polarization
	15849.5	47.8	2.1	49.9	74	-24.1	Peak	Horizontal
*	16733.5	47.5	3.7	51.2	68.2	-17.0	Peak	Horizontal
*	17328.5	47.8	3.9	51.7	68.2	-16.5	Peak	Horizontal
	17940.5	46.6	4.9	51.5	74	-22.5	Peak	Horizontal
	15654.0	49.1	0.9	50.0	74	-24.0	Peak	Vertical
*	16597.5	48.6	3.0	51.6	68.2	-16.6	Peak	Vertical
*	17439.0	48.0	4.4	52.4	68.2	-15.8	Peak	Vertical
	17923.5	46.8	4.9	51.7	74	-22.3	Peak	Vertical

Test Mode 1: “*” is not in restricted band, its limit is -27dBm/MHz. At a distance of 3 meters, the field strength limit in dBμV/m can be determined by adding a “conversion” factor of 95.2dB to the EIRP limit of -27dBm/MHz to obtain the limit for out of band spurious emissions.

Test Mode 2: Measure Level (dBμV/m) = Reading Level (dBμV) + Factor (dB)

Factor (dB) = Cable Loss (dB) + Antenna Factor (dB/m) - Pre_Amplifier Gain (dB)

Test Site	SIP-AC1	Test Engineer	Stephen Dong
Test Date	2020/11/21~2021/11/24	Test Frequency	5729MHz
Test Mode	Half BW		
Remark	1. Average measurement was not performed if peak level lower than average limit. 2. Other frequency was 20dB below limit line within 1-18GHz, there is not show in the report.		

Mark	Frequency (MHz)	Reading Level (dBμV)	Factor (dB)	Measure Level (dBμV/m)	Limit (dBμV/m)	Margin (dB)	Detector	Polarization
*	14838.0	49.1	0.2	49.3	68.2	-18.9	Peak	Horizontal
	15756.0	47.5	2.1	49.6	74	-24.4	Peak	Horizontal
*	17371.0	47.7	4.3	52.0	68.2	-16.2	Peak	Horizontal
	17923.5	46.8	4.9	51.7	74	-22.3	Peak	Horizontal
	15849.5	48.1	2.1	50.2	74	-23.8	Peak	Vertical
*	16742.0	47.4	3.8	51.2	68.2	-17.0	Peak	Vertical
*	17481.5	47.4	4.4	51.8	68.2	-16.4	Peak	Vertical
	17745.0	48.3	4.4	52.7	74	-21.3	Peak	Vertical

Test Mode 1: “*” is not in restricted band, its limit is -27dBm/MHz. At a distance of 3 meters, the field strength limit in dBμV/m can be determined by adding a “conversion” factor of 95.2dB to the EIRP limit of -27dBm/MHz to obtain the limit for out of band spurious emissions.

Test Mode 2: Measure Level (dBμV/m) = Reading Level (dBμV) + Factor (dB)

Factor (dB) = Cable Loss (dB) + Antenna Factor (dB/m) - Pre_Amplifier Gain (dB)

Test Site	SIP-AC1	Test Engineer	Stephen Dong
Test Date	2020/11/21~2021/11/24	Test Frequency	5788MHz
Test Mode	Half BW		
Remark	1. Average measurement was not performed if peak level lower than average limit. 2. Other frequency was 20dB below limit line within 1-18GHz, there is not show in the report.		

Mark	Frequency (MHz)	Reading Level (dBμV)	Factor (dB)	Measure Level (dBμV/m)	Limit (dBμV/m)	Margin (dB)	Detector	Polarization
	15756.0	47.8	2.1	49.9	74	-24.1	Peak	Horizontal
*	16801.5	48.0	3.6	51.6	68.2	-16.6	Peak	Horizontal
*	17515.5	48.5	4.2	52.7	68.2	-15.5	Peak	Horizontal
	17906.5	46.9	4.9	51.8	74	-22.2	Peak	Horizontal
	15569.0	49.3	1.0	50.3	74	-23.7	Peak	Vertical
*	16410.5	47.7	3.0	50.7	68.2	-17.5	Peak	Vertical
*	17311.5	47.8	4.0	51.8	68.2	-16.4	Peak	Vertical
	18000.0	47.2	5.1	52.3	74	-21.7	Peak	Vertical

Test Mode 1: “*” is not in restricted band, its limit is -27dBm/MHz. At a distance of 3 meters, the field strength limit in dBμV/m can be determined by adding a “conversion” factor of 95.2dB to the EIRP limit of -27dBm/MHz to obtain the limit for out of band spurious emissions.

Test Mode 2: Measure Level (dBμV/m) = Reading Level (dBμV) + Factor (dB)

Factor (dB) = Cable Loss (dB) + Antenna Factor (dB/m) - Pre_Amplifier Gain (dB)

Test Site	SIP-AC1	Test Engineer	Stephen Dong
Test Date	2020/11/21~2021/11/24	Test Frequency	5846MHz
Test Mode	Half BW		
Remark	1. Average measurement was not performed if peak level lower than average limit. 2. Other frequency was 20dB below limit line within 1-18GHz, there is not show in the report.		

Mark	Frequency (MHz)	Reading Level (dBμV)	Factor (dB)	Measure Level (dBμV/m)	Limit (dBμV/m)	Margin (dB)	Detector	Polarization
	15926.0	47.7	1.5	49.2	74	-24.8	Peak	Horizontal
*	16402.0	47.6	3.2	50.8	68.2	-17.4	Peak	Horizontal
*	17668.5	47.6	4.4	52.0	68.2	-16.2	Peak	Horizontal
	17949.0	47.1	4.9	52.0	74	-22.0	Peak	Horizontal
	15441.5	48.3	1.4	49.7	74	-24.3	Peak	Vertical
*	16546.5	48.3	2.9	51.2	68.2	-17.0	Peak	Vertical
*	17175.5	47.4	4.0	51.4	68.2	-16.8	Peak	Vertical
	17949.0	47.1	4.9	52.0	74	-22.0	Peak	Vertical

Test Mode 1: “*” is not in restricted band, its limit is -27dBm/MHz. At a distance of 3 meters, the field strength limit in dBμV/m can be determined by adding a “conversion” factor of 95.2dB to the EIRP limit of -27dBm/MHz to obtain the limit for out of band spurious emissions.

Test Mode 2: Measure Level (dBμV/m) = Reading Level (dBμV) + Factor (dB)

Factor (dB) = Cable Loss (dB) + Antenna Factor (dB/m) - Pre_Amplifier Gain (dB)

The Worst Case of Radiated Emission below 1GHz:

Site: SIP-AC3	Time: 2021/04/07
Limit: FCC_Part15.209_RE(3m)	Engineer: White Wang
Probe: SIP-AC3_VULB 9168 _30-1000MHz	Polarity: Horizontal
EUT: Wireless Bodypack Transmitter	Power: By Battery
Worst Case Mode: Transmit by Half mode bandwidth at channel 5788MHz	

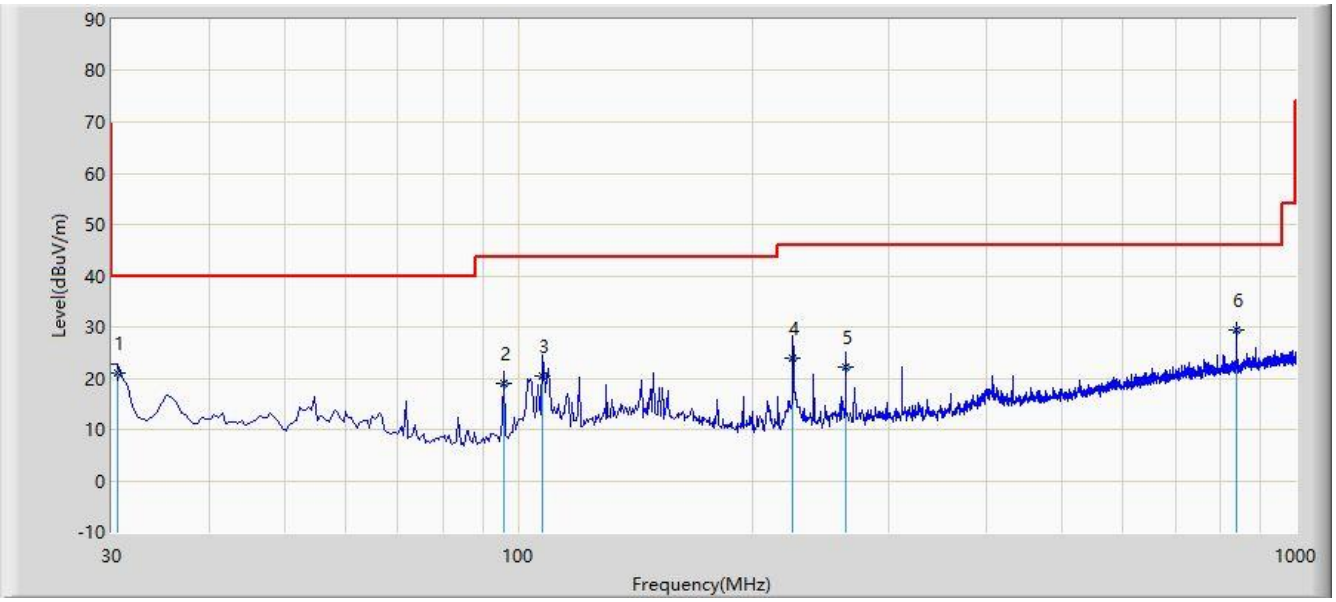

No	Flag	Mark	Frequency (MHz)	Measure Level (dBuV/m)	Reading Level (dBuV)	Margin (dB)	Limit (dBuV/m)	Factor (dB)	Type
1			30.485	20.889	4.200	-19.111	40.000	16.689	QP
2			95.960	18.909	6.200	-24.591	43.500	12.709	QP
3			107.600	20.519	5.900	-22.981	43.500	14.619	QP
4			225.455	23.892	9.300	-22.108	46.000	14.592	QP
5			263.770	22.223	5.100	-23.777	46.000	17.123	QP
6		*	839.950	29.457	1.100	-16.543	46.000	28.357	QP

Note 1: Measure Level (dBμV/m) = Reading Level (dBμV) + Factor (dB)

Factor (dB) = Cable Loss (dB) + Antenna Factor (dB/m)

Note 2: The amplitude of radiated emissions (frequency range from 9kHz to 30MHz and 18GHz to 40GHz) is that proximity to ambient noise, which also are attenuated more than 20 dB below the permissible value. Therefore, the data is not presented in the report.

Site: AC3	Time: 2021/04/07 - 15:08
Limit: FCC_Part15.209_RE(3m)	Engineer: White Wang
Probe: SIP-AC3_VULB 9168 _30-1000MHz	Polarity: Vertical
EUT: Wireless Bodypack Transmitter	Power: By Battery
Worst Case Mode: Transmit by Half mode bandwidth at channel 5788MHz	

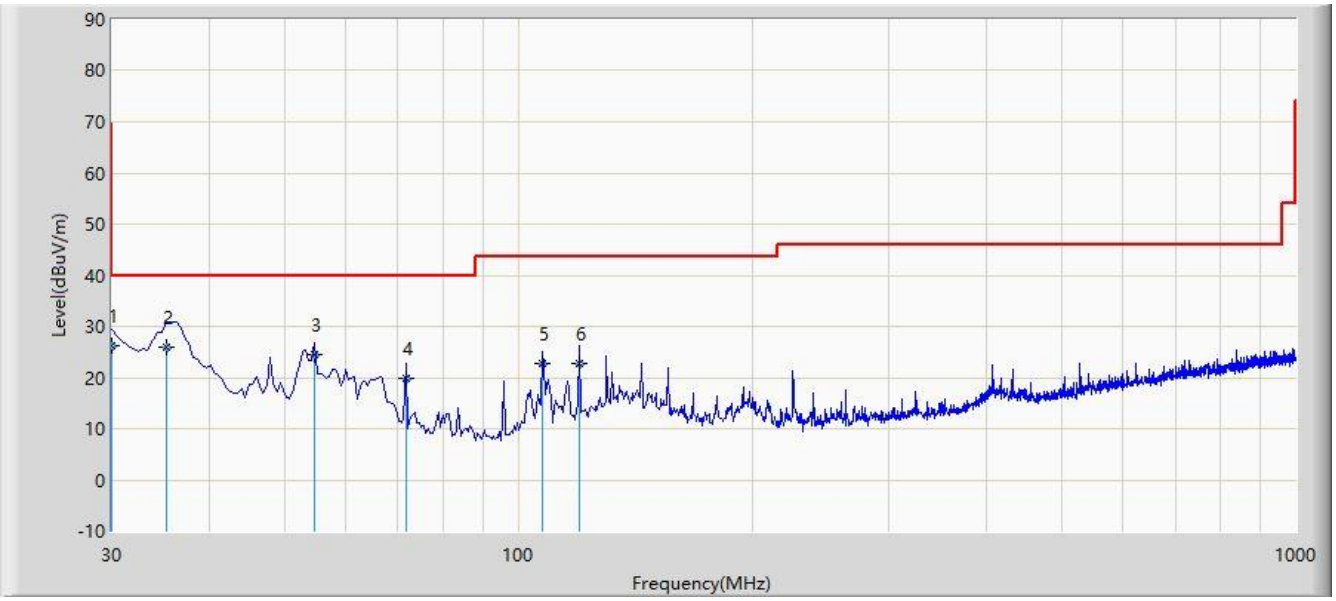

No	Flag	Mark	Frequency (MHz)	Measure Level (dBuV/m)	Reading Level (dBuV)	Margin (dB)	Limit (dBuV/m)	Factor (dB)	Type
1		*	30.000	26.103	9.300	-13.897	40.000	16.803	QP
2			35.335	25.950	8.900	-14.050	40.000	17.051	QP
3			54.735	24.512	6.800	-15.488	40.000	17.712	QP
4			71.710	19.783	4.600	-20.217	40.000	15.183	QP
5			107.600	22.719	8.100	-20.781	43.500	14.619	QP
6			119.725	22.797	7.500	-20.703	43.500	15.297	QP

Note 1: Measure Level (dBμV/m) = Reading Level (dBμV) + Factor (dB)

Factor (dB) = Cable Loss (dB) + Antenna Factor (dB/m)

Note 2: The amplitude of radiated emissions (frequency range from 9kHz to 30MHz and 18GHz to 40GHz) is that proximity to ambient noise, which also are attenuated more than 20 dB below the permissible value. Therefore, the data is not presented in the report.

6.8. Radiated Restricted Band Edge Measurement

6.8.1.Test Limit

For 15.205Requirement:

Radiated emissions which fall in the restricted bands, as defined in Section 15.205(a) of FCC part 15, must also comply with the radiated emission limits specified in Section 15.209(a).

Frequency (MHz)	Frequency (MHz)	Frequency (MHz)	Frequency (GHz)
0.090 - 0.110	16.42-16.423	399.9 - 410	4.5-5.15
[1] 0.495 - 0.505	16.69475-16.69525	608 - 614	5.35-5.46
2.1735-2.1905	16.80425-16.80475	960 - 1240	7.25-7.75
4.125-4.128	25.5 -25.67	1300 - 1427	8.025 - 8.5
4.17725-4.17775	37.5-38.25	1435-1626.5	9.0-9.2
4.20725-4.20775	73-74.6	1645.5-1646.5	9.3-9.5
6.215-6.218	74.8-75.2	1660 - 1710	10.6-12.7
6.26775-6.26825	108-121.94	1718.8-1722.2	13.25-13.4
6.31175-6.31225	123 - 138	2200 - 2300	14.47-14.5
8.291-8.294	149.9-150.05	2310–2390	15.35-16.2
8.362-8.366	156.52475-156.52525	2483.5 - 2500	17.7-21.4
8.37625-8.38675	156.7-156.9	2690 - 2900	22.01-23.12
8.41425-8.41475	162.0125-167.17	3260 - 3267	23.6-24.0
12.29-12.293	167.72-173.2	3332 - 3339	31.2-31.8
12.51975-12.52025	240 - 285	3345.8 - 3358	36.43-36.5
12.57675-12.57725	322-335.4	3600 - 4400	([2])
13.36-13.41	--	--	--

For 15.407(b) Requirement:

For transmitters operating in the 5.725-5.85 GHz band: All emissions within the frequency range from the band edge to 10 MHz above or below the band edge shall not exceed an e.i.r.p. of -17 dBm/MHz; for frequencies 10 MHz or greater above or below the band edge, emissions shall not exceed an e.i.r.p. of -27 dBm/MHz.

Refer to KDB 789033 D02v02r01 G)2)c), as specified in § 15.407(b), emissions above 1000 MHz that are outside of the restricted bands are subject to a maximum emission limit of -27 dBm/MHz (or -17 dBm/MHz as specified in § 15.407(b)(4)). However, an out-of-band emission that complies with

both the peak and average limits of § 15.209 is not required to satisfy the -27 dBm/MHz or -17 dBm/MHz maximum emission limit.

All out of band emissions appearing in a restricted band as specified in Section 15.205 of the Title 47CFR must not exceed the limits shown in Table per Section 15.209.

FCC Part 15 Subpart C Paragraph 15.209		
Frequency (MHz)	Field Strength (μV/m)	Measured Distance (m)
0.009 - 0.490	2400/F (kHz)	300
0.490 - 1.705	24000/F (kHz)	30
1.705 - 30	30	30
30 - 88	100	3
88 - 216	150	3
216 - 960	200	3
Above 960	500	3

6.8.2.Test Procedure Used

KDB 789033 D02v02r01- Section G

6.8.3.Test Setting

Peak Measurements above 1GHz

1. Analyzer center frequency was set to the frequency of the radiated spurious emission of interest
2. RBW = 1MHz
3. VBW = 3MHz
4. Detector = Peak
5. Sweep time = Auto couple
6. Trace mode = Max hold
7. Trace was allowed to stabilize

Average Measurements above 1GHz (Method VB)

1. Analyzer center frequency was set to the frequency of the radiated spurious emission of interest
2. RBW = 1MHz
3. VBW; if the EUT is configured to transmit with duty cycle ≥ 98%, set VBW = 10Hz
4. If the EUT duty cycle is < 98%, set VBW ≥ 1/T. T is the minimum transmission duration
5. Detector = Peak
6. Sweep time = Auto
7. Trace mode = Max hold
8. Trace was allowed to stabilize

6.8.4.Test Setup

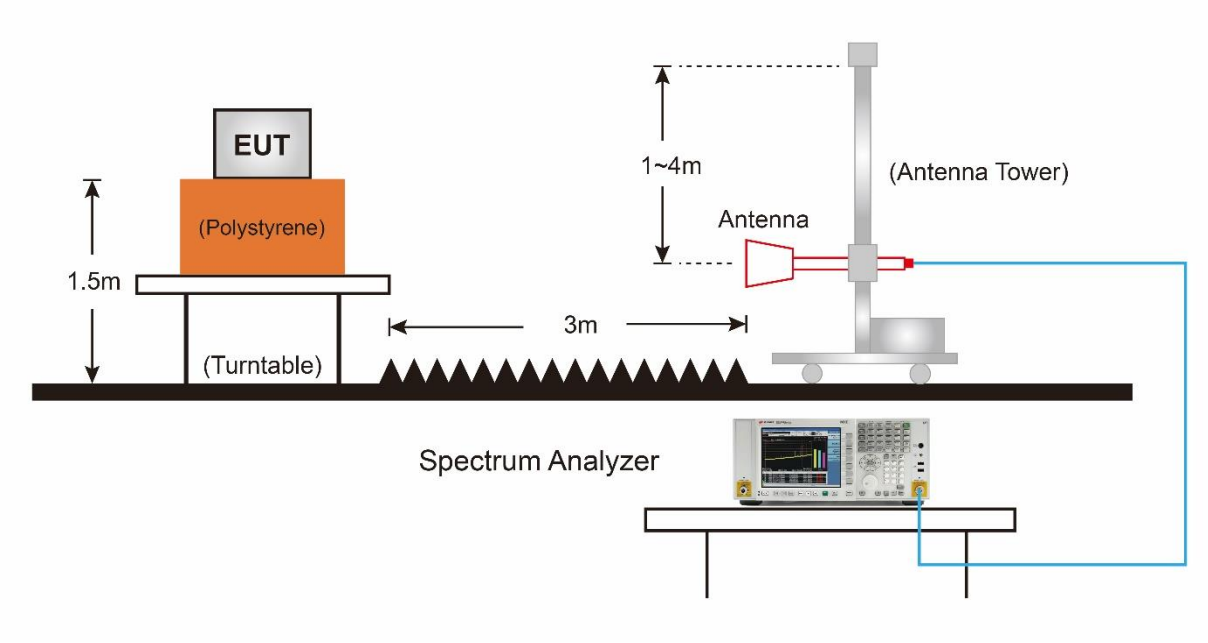

6.8.5.Test Result

Site: SIP-AC3	Time: 2021/03/18 - 13:13
Limit: FCC_Part15.407_RE(3m)	Engineer: White Wang
Probe: SIP-AC3_HF907_102861_1-18GHz	Polarity: Horizontal
EUT: Wireless Bodypack Transmitter	Power: By Battery
Test Mode: Transmit by Full BW at channel 5729MHz	

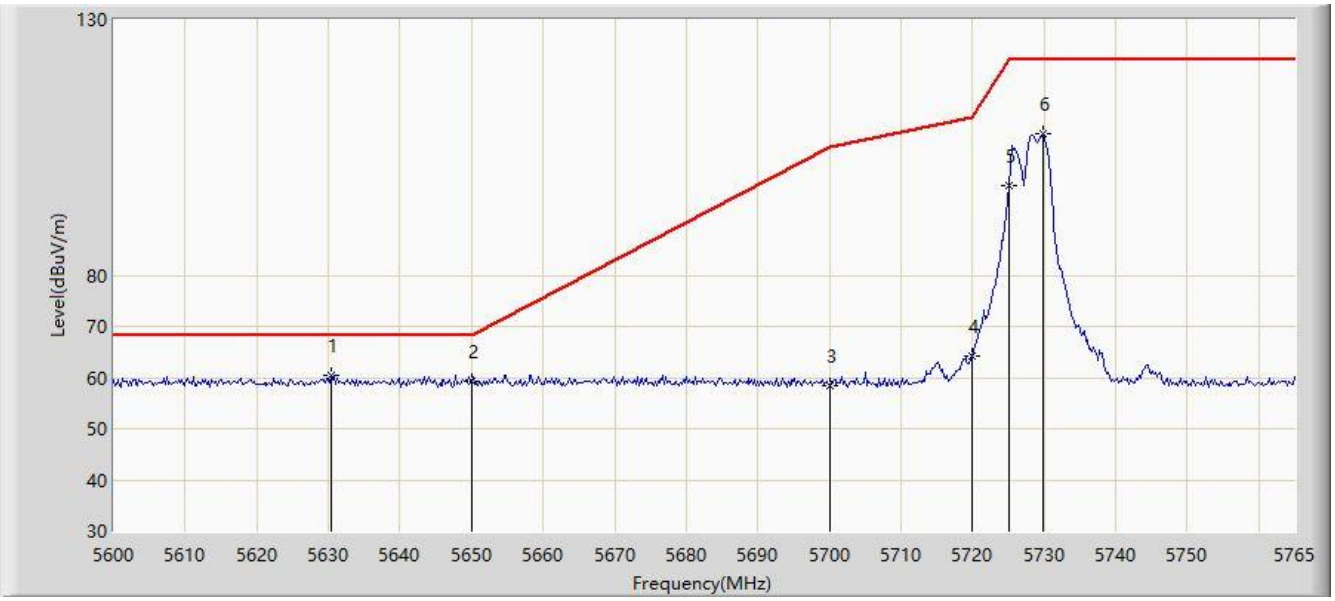

No	Flag	Mark	Frequency (MHz)	Measure Level (dBuV/m)	Reading Level (dBuV)	Margin (dB)	Limit (dBuV/m)	Factor (dB)	Type
1		*	5630.400	60.365	68.580	-7.835	68.200	-8.216	PK
2			5650.000	59.338	67.547	-8.862	68.200	-8.209	PK
3			5700.000	58.530	66.943	-46.670	105.200	-8.414	PK
4			5720.000	64.107	72.444	-46.693	110.800	-8.336	PK
5			5725.000	97.569	105.881	-24.631	122.200	-8.312	PK
6			5729.800	107.577	115.914	N/A	N/A	-8.336	PK

Note: Measure Level (dBμV/m) = Reading Level (dBμV) + Factor (dB)

Factor (dB) = Cable Loss (dB) + Antenna Factor (dB/m) - Pre_Amplifier Gain (dB).

Site: SIP-AC3	Time: 2021/03/18 - 13:23
Limit: FCC_Part15.407_RE(3m)	Engineer: White Wang
Probe: SIP-AC3_HF907_102861_1-18GHz	Polarity: Vertical
EUT: Wireless Bodypack Transmitter	Power: By Battery
Test Mode: Transmit by Full BW at channel 5729MHz	

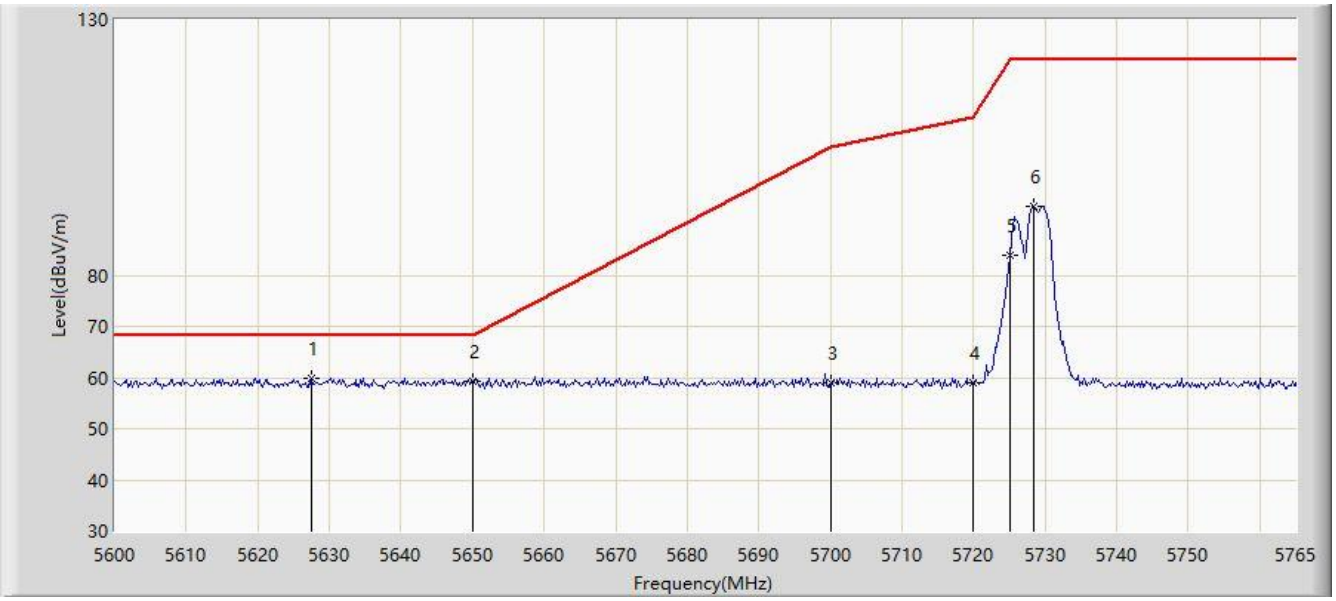

No	Flag	Mark	Frequency (MHz)	Measure Level (dBuV/m)	Reading Level (dBuV)	Margin (dB)	Limit (dBuV/m)	Factor (dB)	Type
1		*	5627.600	59.953	68.183	-8.247	68.200	-8.230	PK
2			5650.000	59.160	67.369	-9.040	68.200	-8.209	PK
3			5700.000	59.020	67.433	-46.180	105.200	-8.414	PK
4			5720.000	59.127	67.464	-51.673	110.800	-8.336	PK
5			5725.000	83.895	92.207	-38.305	122.200	-8.312	PK
6			5728.400	93.526	101.852	N/A	N/A	-8.326	PK

Note: Measure Level (dBμV/m) = Reading Level (dBμV) + Factor (dB)

Factor (dB) = Cable Loss (dB) + Antenna Factor (dB/m) - Pre_Amplifier Gain (dB).

Site: SIP-AC3	Time: 2021/03/18 - 13:38
Limit: FCC_Part15.407_RE(3m)	Engineer: White Wang
Probe: SIP-AC3_HF907_102861_1-18GHz	Polarity: Horizontal
EUT: Wireless Bodypack Transmitter	Power: By Battery
Test Mode: Transmit by Full BW at channel 5846MHz	

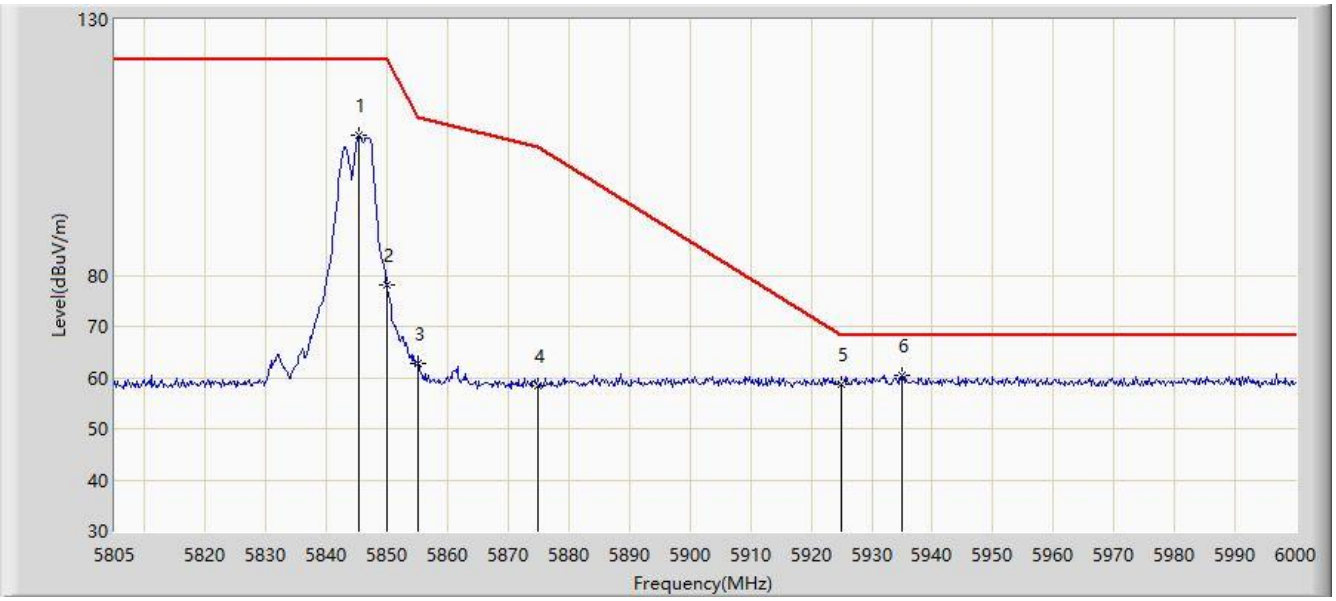

No	Flag	Mark	Frequency (MHz)	Measure Level (dBuV/m)	Reading Level (dBuV)	Margin (dB)	Limit (dBuV/m)	Factor (dB)	Type
1			5845.200	107.315	115.404	N/A	N/A	-8.088	PK
2			5850.000	78.193	86.297	-44.007	122.200	-8.104	PK
3			5855.000	62.771	70.891	-48.029	110.800	-8.119	PK
4			5875.000	58.532	66.525	-46.668	105.200	-7.993	PK
5			5925.000	58.825	66.631	-9.375	68.200	-7.805	PK
6		*	5935.000	60.331	68.067	-7.869	68.200	-7.736	PK

Note: Measure Level (dBμV/m) = Reading Level (dBμV) + Factor (dB)

Factor (dB) = Cable Loss (dB) + Antenna Factor (dB/m) - Pre_Amplifier Gain (dB).

Site: SIP-AC3	Time: 2021/03/18 - 13:42
Limit: FCC_Part15.407_RE(3m)	Engineer: White Wang
Probe: SIP-AC3_HF907_102861_1-18GHz	Polarity: Vertical
EUT: Wireless Bodypack Transmitter	Power: By Battery
Test Mode: Transmit by Full BW at channel 5846MHz	

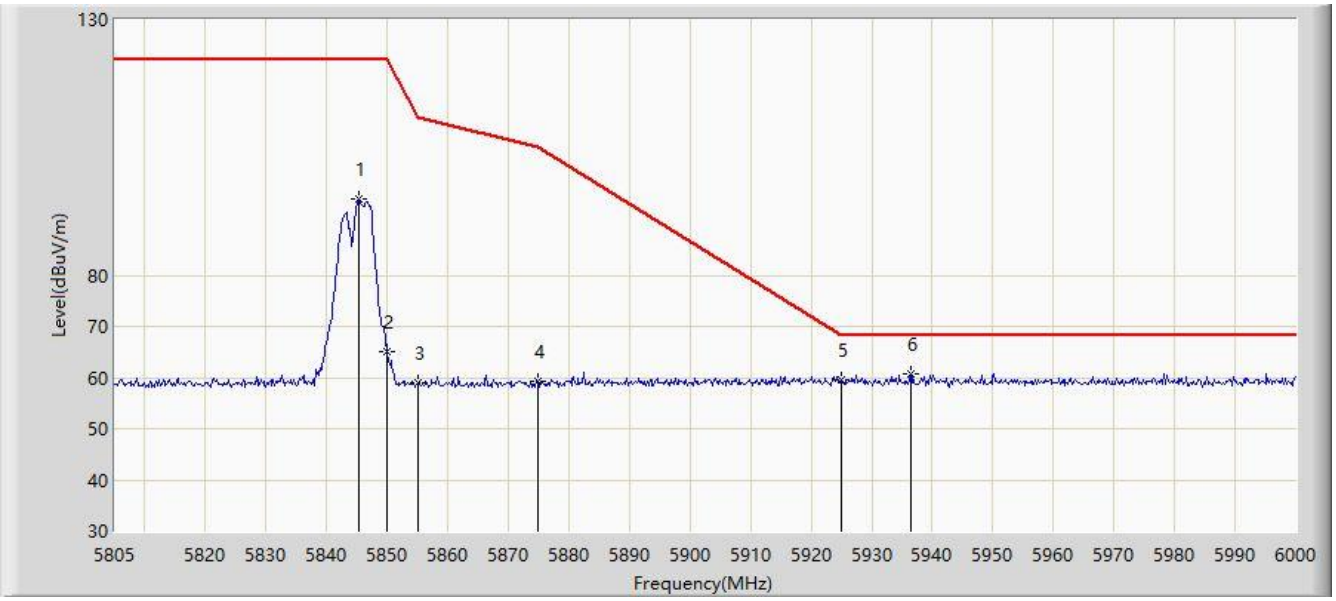

No	Flag	Mark	Frequency (MHz)	Measure Level (dBuV/m)	Reading Level (dBuV)	Margin (dB)	Limit (dBuV/m)	Factor (dB)	Type
1			5845.200	94.922	103.011	N/A	N/A	-8.088	PK
2			5850.000	65.146	73.250	-57.054	122.200	-8.104	PK
3			5855.000	59.053	67.173	-51.747	110.800	-8.119	PK
4			5875.000	59.188	67.181	-46.012	105.200	-7.993	PK
5			5925.000	59.705	67.511	-8.495	68.200	-7.805	PK
6		*	5936.400	60.781	68.518	-7.419	68.200	-7.736	PK

Note: Measure Level (dBμV/m) = Reading Level (dBμV) + Factor (dB)

Factor (dB) = Cable Loss (dB) + Antenna Factor (dB/m) - Pre_Amplifier Gain (dB).

Site: SIP-AC3	Time: 2021/03/18 - 13:48
Limit: FCC_Part15.407_RE(3m)	Engineer: White Wang
Probe: SIP-AC3_HF907_102861_1-18GHz	Polarity: Horizontal
EUT: Wireless Bodypack Transmitter	Power: By Battery
Test Mode: Transmit by Half BW at channel 5729MHz	

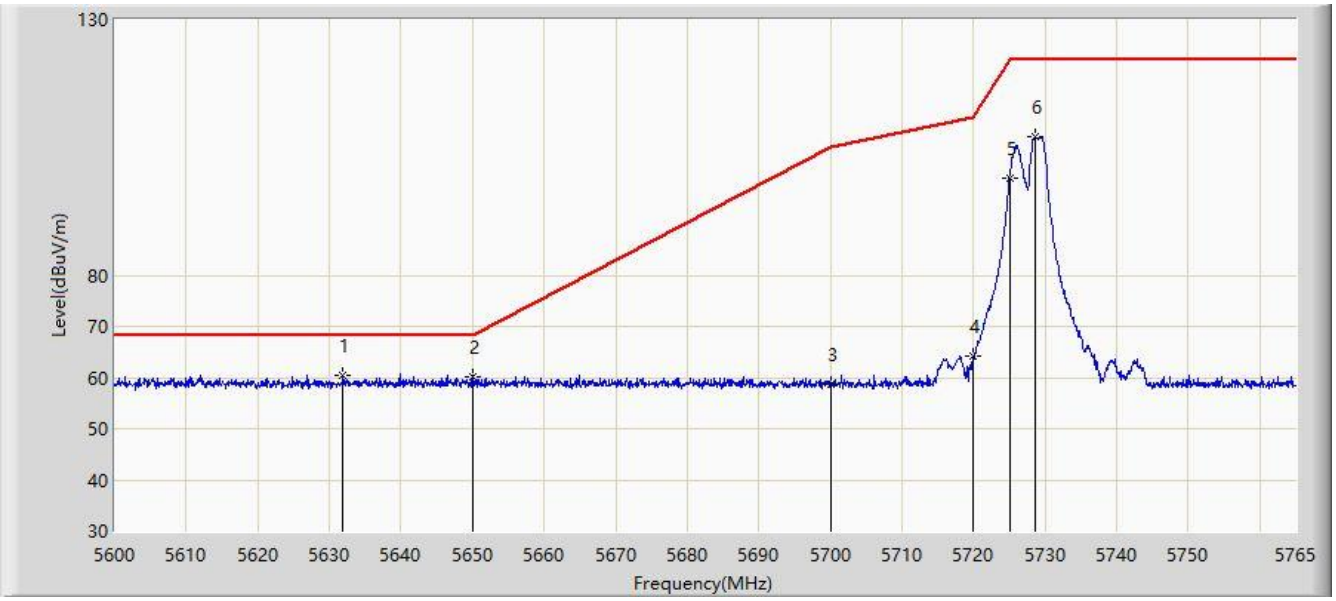

No	Flag	Mark	Frequency (MHz)	Measure Level (dBuV/m)	Reading Level (dBuV)	Margin (dB)	Limit (dBuV/m)	Factor (dB)	Type
1		*	5631.845	60.331	68.539	-7.869	68.200	-8.208	PK
2			5650.000	60.273	68.482	-7.927	68.200	-8.209	PK
3			5700.000	58.838	67.251	-46.362	105.200	-8.414	PK
4			5720.000	64.092	72.429	-46.708	110.800	-8.336	PK
5			5725.000	98.994	107.306	-23.206	122.200	-8.312	PK
6			5728.535	106.975	115.302	N/A	N/A	-8.327	PK

Note: Measure Level (dBμV/m) = Reading Level (dBμV) + Factor (dB)

Factor (dB) = Cable Loss (dB) + Antenna Factor (dB/m) - Pre_Amplifier Gain (dB).

Site: SIP-AC3	Time: 2021/03/18 - 13:53
Limit: FCC_Part15.407_RE(3m)	Engineer: White Wang
Probe: SIP-AC3_HF907_102861_1-18GHz	Polarity: Vertical
EUT: Wireless Bodypack Transmitter	Power: By Battery
Test Mode: Transmit by Half BW at channel 5729MHz	

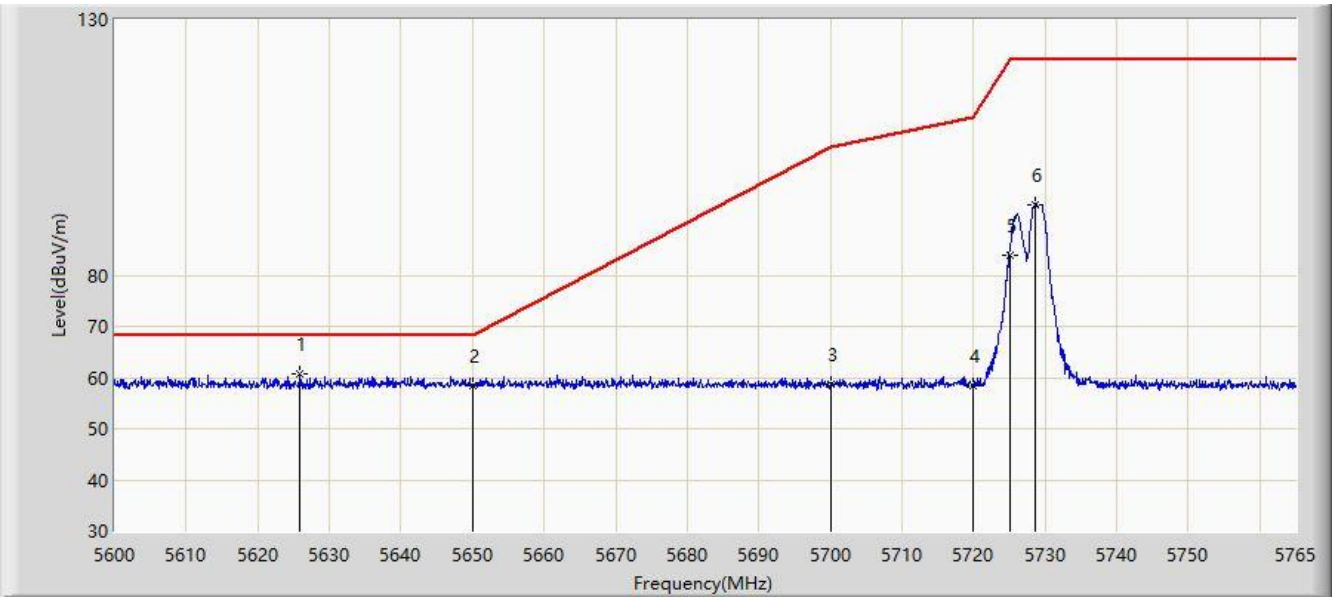

No	Flag	Mark	Frequency (MHz)	Measure Level (dBuV/m)	Reading Level (dBuV)	Margin (dB)	Limit (dBuV/m)	Factor (dB)	Type
1		*	5625.905	60.683	68.922	-7.517	68.200	-8.239	PK
2			5650.000	58.541	66.750	-9.659	68.200	-8.209	PK
3			5700.000	58.568	66.981	-46.632	105.200	-8.414	PK
4			5720.000	58.406	66.743	-52.394	110.800	-8.336	PK
5			5725.000	83.925	92.237	-38.275	122.200	-8.312	PK
6			5728.535	93.833	102.160	N/A	N/A	-8.327	PK

Note: Measure Level (dBμV/m) = Reading Level (dBμV) + Factor (dB)

Factor (dB) = Cable Loss (dB) + Antenna Factor (dB/m) - Pre_Amplifier Gain (dB).

Site: SIP-AC3	Time: 2021/03/18 - 14:03
Limit: FCC_Part15.407_RE(3m)	Engineer: White Wang
Probe: SIP-AC3_HF907_102861_1-18GHz	Polarity: Horizontal
EUT: Wireless Bodypack Transmitter	Power: By Battery
Test Mode: Transmit by Half BW at channel 5846MHz	

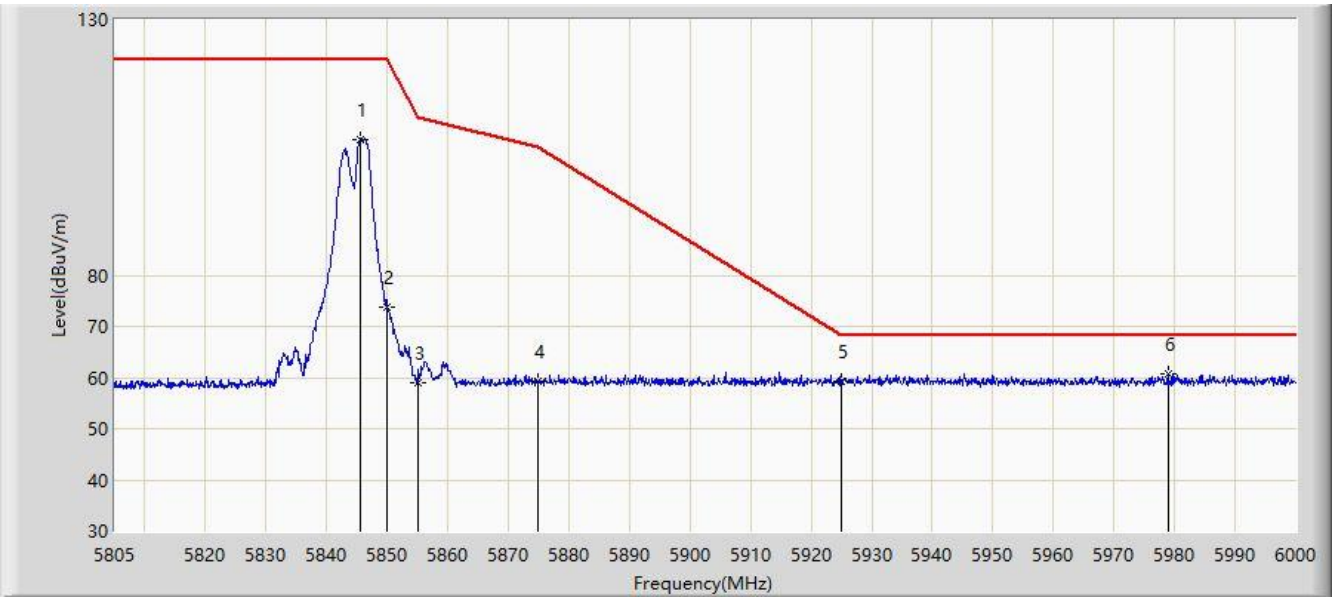

No	Flag	Mark	Frequency (MHz)	Measure Level (dBuV/m)	Reading Level (dBuV)	Margin (dB)	Limit (dBuV/m)	Factor (dB)	Type
1			5845.462	106.596	114.685	N/A	N/A	-8.090	PK
2			5850.000	73.898	82.002	-48.302	122.200	-8.104	PK
3			5855.000	58.909	67.029	-51.891	110.800	-8.119	PK
4			5875.000	59.220	67.213	-45.980	105.200	-7.993	PK
5			5925.000	59.167	66.973	-9.033	68.200	-7.805	PK
6		*	5978.940	60.752	68.500	-7.448	68.200	-7.747	PK

Note: Measure Level (dBμV/m) = Reading Level (dBμV) + Factor (dB)

Factor (dB) = Cable Loss (dB) + Antenna Factor (dB/m) - Pre_Amplifier Gain (dB).

Site: SIP-AC3	Time: 2021/03/18 - 14:13
Limit: FCC_Part15.407_RE(3m)	Engineer: White Wang
Probe: SIP-AC3_HF907_102861_1-18GHz	Polarity: Vertical
EUT: Wireless Bodypack Transmitter	Power: By Battery
Test Mode: Transmit by Half BW at channel 5846MHz	

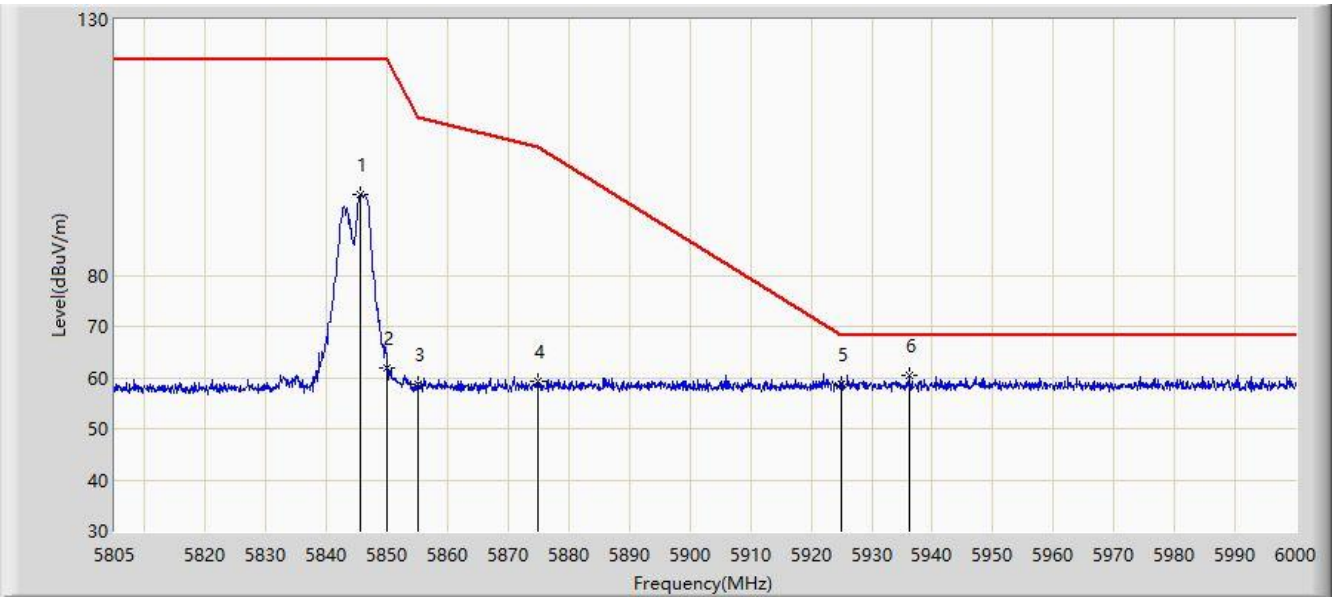

No	Flag	Mark	Frequency (MHz)	Measure Level (dBuV/m)	Reading Level (dBuV)	Margin (dB)	Limit (dBuV/m)	Factor (dB)	Type
1			5845.560	95.775	103.865	N/A	N/A	-8.089	PK
2			5850.000	62.000	70.104	-60.200	122.200	-8.104	PK
3			5855.000	58.714	66.834	-52.086	110.800	-8.119	PK
4			5875.000	59.291	67.284	-45.909	105.200	-7.993	PK
5			5925.000	58.754	66.560	-9.446	68.200	-7.805	PK
6		*	5936.333	60.316	68.053	-7.884	68.200	-7.737	PK

Note: Measure Level (dBμV/m) = Reading Level (dBμV) + Factor (dB)

Factor (dB) = Cable Loss (dB) + Antenna Factor (dB/m) - Pre_Amplifier Gain (dB).

6.9. Duty Cycle Factor Measurement

6.9.1. Test Requirement

Unless otherwise specified, when the radiated emission limits are expressed in terms of the average value of the emission, and pulsed operation is employed, the measurement field strength shall be determined by averaging over one complete pulse train, including blanking intervals, as long as the pulse train does not exceed 0.1 s (100 ms). In cases where the pulse train exceeds 0.1 s, the measured field strength shall be determined during a 0.1 s interval.

The exact method of calculating the average field strength shall be submitted with any application for certification or shall be retrained in the measurement data file for equipment subject to notification or verification.

6.9.2. Test Procedures

a. The EUT was set to communicate with GLXD4+ continuously.

b. A horn antenna was positioned at a 3 meter distance from the EUT. The output of the antenna was connected to the input of a spectrum analyzer.

c. The center frequency of the spectrum analyzer was set to the transmit frequency of the EUT.

d. The frequency span of the spectrum analyzer was set to 0Hz so that the time domain trace of the transmitted pulse of the EUT was displayed on the spectrum analyzer.

e. The sweep time of the spectrum analyzer was adjusted so that the beginning and end of a single pulse could be seen on the display of the spectrum analyzer.

f. The single sweep function of the spectrum analyzer was used multiple times to determine the maximum pulse width of the EUT.

g. The maximum pulse width display of the spectrum analyzer was recorded and then plotted using a 'screen dump' utility.

h. The sweep time of the spectrum analyzer was then adjusted to 100msec.

i. The single sweep function of the spectrum analyzer was used multiple times to determine the maximum number of transmitted pulses that occurred in a 100msec time period.

j. The maximum number of pulses transmitted in a 100msec time period was recorded and then plotted using a ‘screen dump’ utility.

k. The duty cycle correction was calculated using the following equation:

Duty Cycle Correction Factor (dB) = D.C. (dB)

D.C. (dB) = 20 x log (((pulse width (msec))x(#pulses in a 100msecperiod)/100msec)

6.9.3. Test Result

Test Site	SIP-SR5	Test Engineer	Alisa Deng
Test Date	2021/04/19		

Test Mode	Frequency (MHz)	Single Pulse Width (us)	Number of Packet In 100ms	Duty Cycle Factor (dB)
Full BW	5733	265.1	79	-13.58
Half BW	5733	832.0	34	-10.97

Note: Duty Cycle Correction Factor (dB) = 20 x log (((pulse width (msec)) x (#pulses in a 100msecperiod) / 100msec).

Full BW, Channel 5733MHz	
Pulse Width	100ms Period
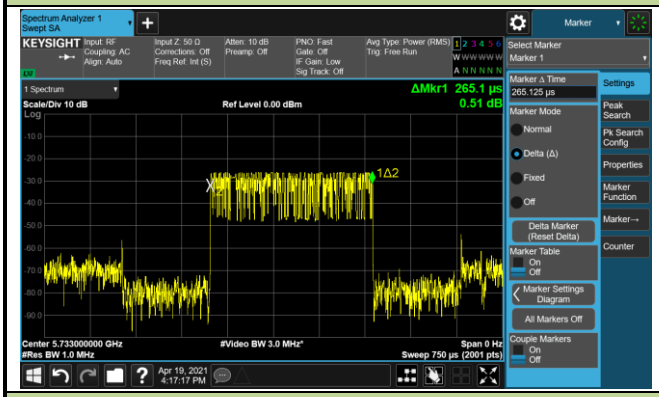	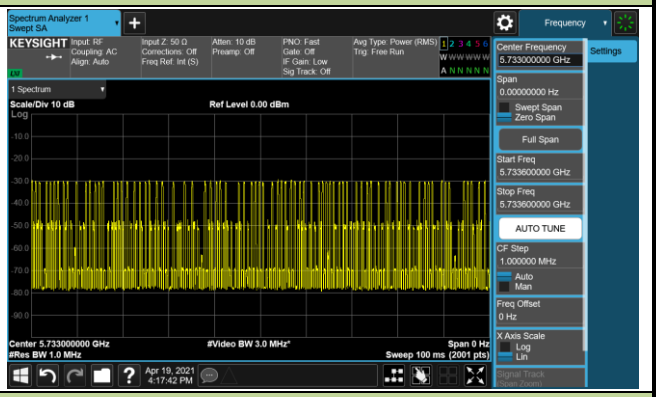
Half BW, Channel 5733MHz	
Pulse Width	100ms Period
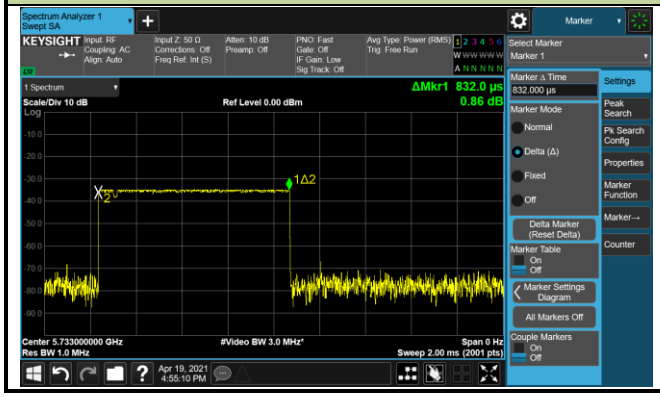	

6.10. AC Conducted Emissions Measurement

6.10.1. Test Limit

FCC Part 15 Subpart C Paragraph 15.207 Limits		
Frequency (MHz)	QP (dBuV)	AV (dBuV)
0.15 - 0.50	66 - 56	56 - 46
0.50 - 5.0	56	46
5.0 - 30	60	50
Note 1: The lower limit shall apply at the transition frequencies. Note 2: The limit decreases linearly with the logarithm of the frequency in the range 0.15MHz to 0.5MHz.		

6.10.2. Test Setup

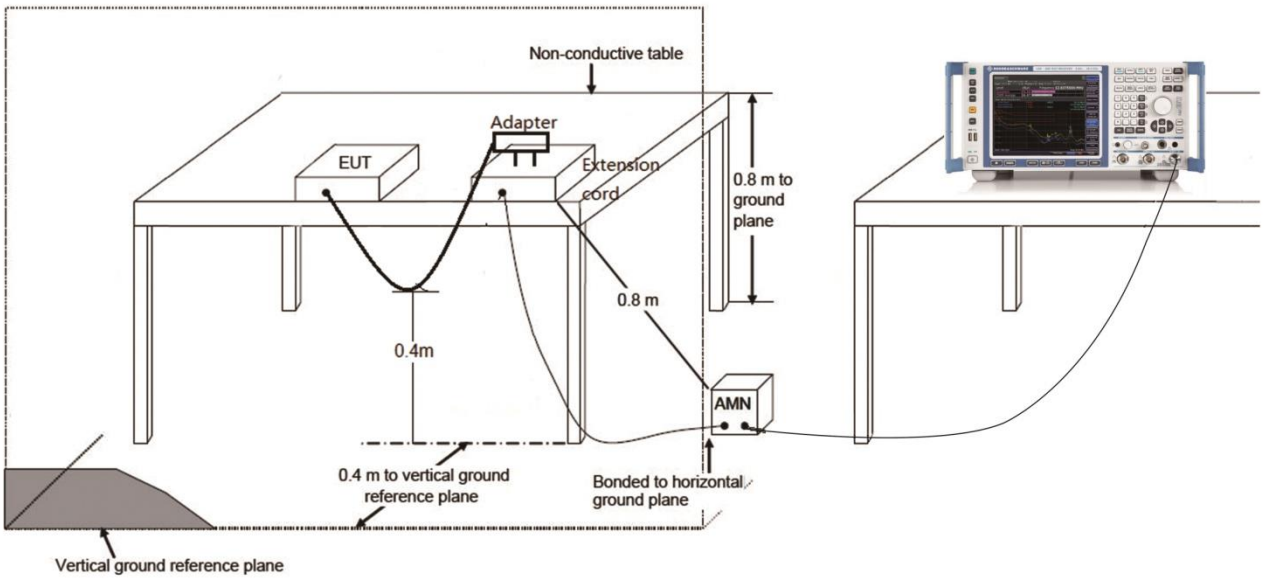

6.10.3. Test Result

Site: SIP-SR2	Time: 2021/04/16 - 18:36
Limit: FCC_Part15.207_CE_AC Power	Engineer: Rupert Wang
Probe: SIP-SR2-ENV216_101684_With Connect	Polarity: Line
EUT: Wireless Bodypack Transmitter	Power: 120V/60Hz
Note: Charging	

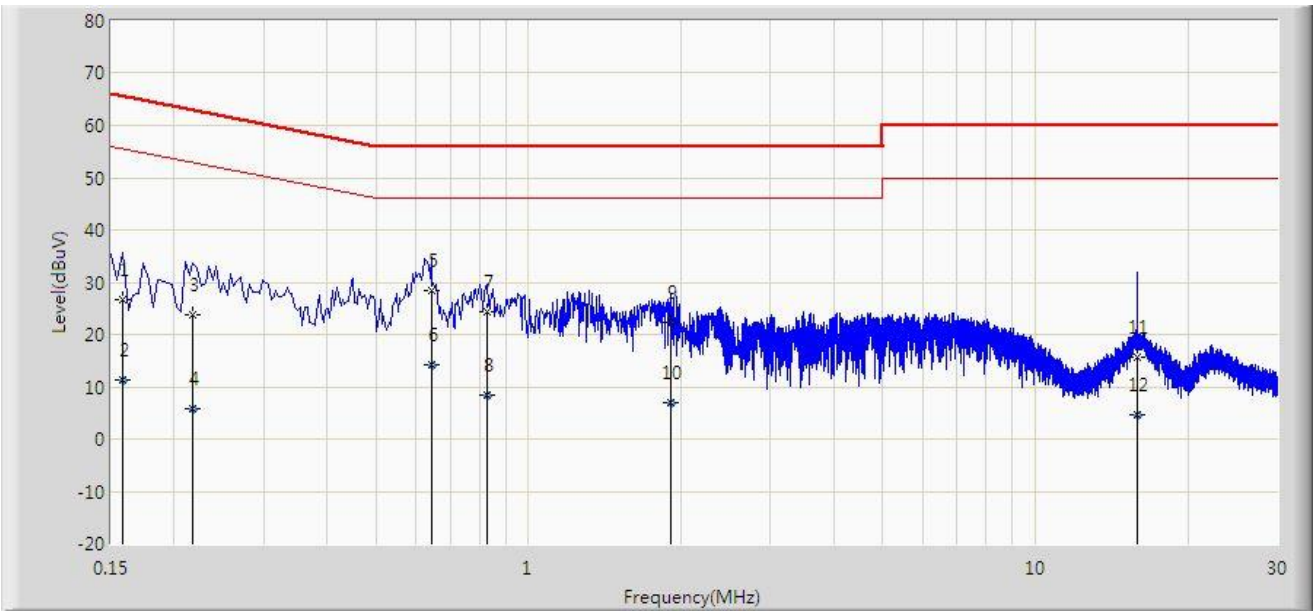

No	Flag	Mark	Frequency (MHz)	Measure Level (dBuV)	Reading Level (dBuV)	Over Limit (dB)	Limit (dBuV)	Factor (dB)	Type
1			0.158	26.601	17.149	-38.968	65.568	9.452	QP
2			0.158	11.171	1.719	-44.397	55.568	9.452	AV
3			0.218	23.897	14.391	-38.998	62.895	9.507	QP
4			0.218	5.812	-3.695	-47.083	52.895	9.507	AV
5		*	0.642	28.463	18.903	-27.537	56.000	9.560	QP
6			0.642	14.310	4.750	-31.690	46.000	9.560	AV
7			0.830	24.471	14.919	-31.529	56.000	9.552	QP
8			0.830	8.472	-1.080	-37.528	46.000	9.552	AV
9			1.910	22.178	12.608	-33.822	56.000	9.570	QP
10			1.910	7.025	-2.545	-38.975	46.000	9.570	AV
11			15.930	15.571	5.373	-44.429	60.000	10.198	QP
12			15.930	4.725	-5.472	-45.275	50.000	10.198	AV

Note: Measure Level (dBμV) = Reading Level (dBμV) + Factor (dB)

Factor (dB) = Cable Loss (dB) + LISN Factor (dB).

Site: SIP-SR2	Time: 2021/04/16 - 18:40
Limit: FCC_Part15.207_CE_AC Power	Engineer: Rupert Wang
Probe: SIP-SR2-ENV216_101684_With Connect	Polarity: Line
EUT: Wireless Bodypack Transmitter	Power: 120V/60Hz
Note: Charging	

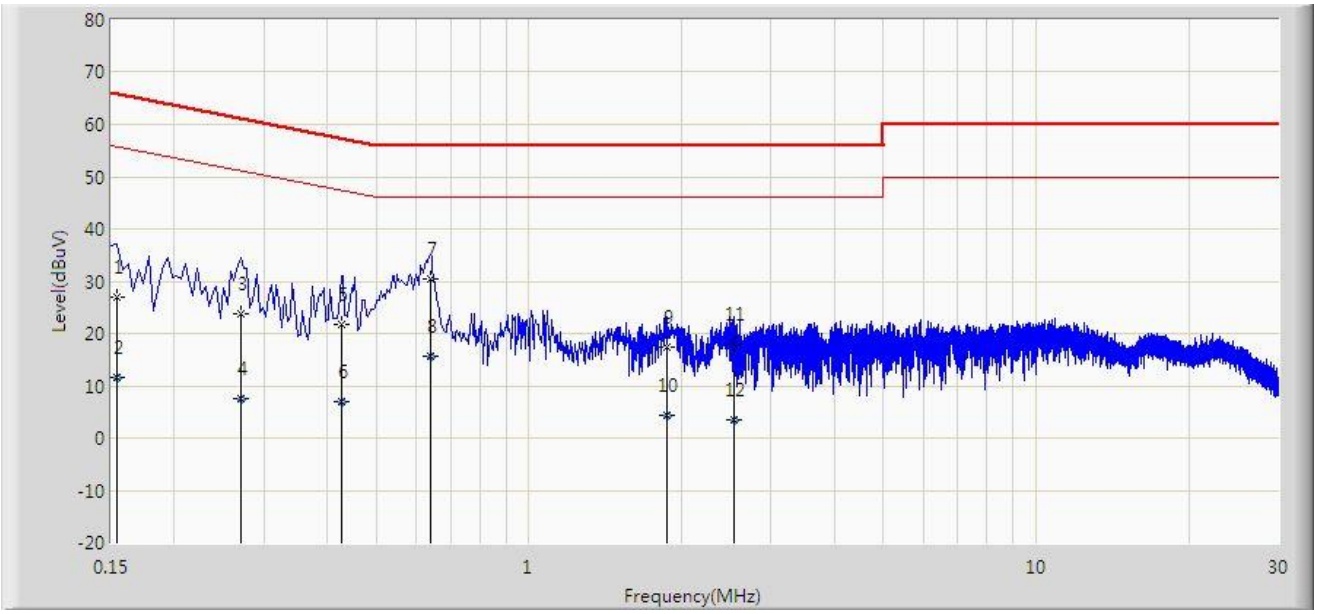

No	Flag	Mark	Frequency (MHz)	Measure Level (dBuV)	Reading Level (dBuV)	Over Limit (dB)	Limit (dBuV)	Factor (dB)	Type
1			0.154	27.095	17.643	-38.687	65.781	9.452	QP
2			0.154	11.560	2.108	-44.222	55.781	9.452	AV
3			0.270	23.790	14.266	-37.328	61.118	9.524	QP
4			0.270	7.609	-1.915	-43.509	51.118	9.524	AV
5			0.426	21.706	12.151	-35.624	57.330	9.555	QP
6			0.426	6.888	-2.667	-40.443	47.330	9.555	AV
7		*	0.638	30.367	20.807	-25.633	56.000	9.560	QP
8			0.638	15.713	6.153	-30.287	46.000	9.560	AV
9			1.870	17.356	7.786	-38.644	56.000	9.570	QP
10			1.870	4.325	-5.245	-41.675	46.000	9.570	AV
11			2.534	17.961	8.373	-38.039	56.000	9.588	QP
12			2.534	3.550	-6.038	-42.450	46.000	9.588	AV

Note: Measure Level (dBμV) = Reading Level (dBμV) + Factor (dB)

Factor (dB) = Cable Loss (dB) + LISN Factor (dB).

7. CONCLUSION

The data collected relate only the item(s) tested and show that the device is in compliance with Part 15E of the FCC rules.

The End

Appendix A - Test Setup Photograph

Refer to “2103RSU004-UT” file.

Appendix B - EUT Photograph

Refer to “2103RSU004-UE” file.