MEASUREMENT REPORT

FCC PART 15.407

FCC ID:	DD4GLXD4RZ3
Applicant:	Shure Incorporated
Product:	Wireless Receiver
Model No.:	GLXD4R+ Z3
Trademark:	SHURE, SHURE®
FCC Classification:	Unlicensed National Information Infrastructure (NII)
FCC Rule Part(s):	Part15 Subpart E (Section 15.407)
Test Result:	Complies
Test Date:	August 02 ~ 20, 2021

Reviewed By: Jame Yuan

Approved By: Robin Wu

ACCREDITED
TESTING LABORATORY
CERTIFICATE #3628.01

The test results relate only to the samples tested.
This equipment has been shown to be capable of compliance with the applicable technical standards as indicated in the measurement report and was tested in accordance with the measurement procedures specified in KDB 789033 D02v02r01. Test results reported herein relate only to the item(s) tested.
The test report shall not be reproduced except in full without the written approval of MRT Technology (Suzhou) Co., Ltd.

Revision History

Report No.	Version	Description	Issue Date	Note
2107RSU058-U2	Rev. 01	Initial Report	08-21-2021	Valid

CONTENTS

Description Page

1. General Information 5

1.1. Applicant 5
1.2. Manufacturer 5
1.3. Testing Facility 5
1.4. Product Information 6
1.5. Radio Specification under Test 6
1.6. Test Frequencies 7
1.7. Antennas Details 7

2. Test Configuration 8

2.1. Test Mode 8
2.2. Test Setup and Software 8
2.3. Duty Cycle 9
2.4. Applicable Standards 9
2.5. Test Environment Condition 9

3. Antenna Requirements 10

4. Test Equipment Calibration 11

5. Measurement Uncertainty 14

6. Test Result 15

6.1. Summary 15
6.2. Emission Bandwidth Measurement 16
6.2.1. Test Limit 16
6.2.2. Test Procedure Used 16
6.2.3. Test Setting 16
6.2.4. Test Setup 16
6.2.5. Test Result 17
6.3. 6dB Bandwidth Measurement 19
6.3.1. Test Limit 19
6.3.2. Test Procedure Used 19
6.3.3. Test Setting 19
6.3.4. Test Setup 19
6.3.5. Test Result 20
6.4. Output Power Measurement 22
6.4.1. Test Limit 22
6.4.2. Test Procedure Used 22

6.4.3. Test Setting 22
6.4.4. Test Setup 22
6.4.5. Test Result 23
6.5. Power Spectral Density Measurement....24
6.5.1. Test Limit....24
6.5.2. Test Procedure Used....24
6.5.3. Test Setting 24
6.5.4. Test Setup 25
6.5.5. Test Result 26
6.6. Frequency Stability Measurement 28
6.6.1. Test Limit....28
6.6.2. Test Procedure Used....28
6.6.3. Test Setup 29
6.6.4. Test Result 30
6.7. Radiated Spurious Emission Measurement....31
6.7.1. Test Limit....31
6.7.2. Test Procedure Used....31
6.7.3. Test Setting 31
6.7.4. Test Setup 33
6.7.5. Test Result 34
6.8. Radiated Restricted Band Edge Measurement....42
6.8.1. Test Limit....42
6.8.2. Test Procedure Used....43
6.8.3. Test Setting 43
6.8.4. Test Setup 44
6.8.5. Test Result 45
6.9. AC Conducted Emissions Measurement 53
6.9.1. Test Limit....53
6.9.2. Test Setup 53
6.9.3. Test Result 54

7. Conclusion....56

Appendix A - Test Setup Photograph....57

Appendix B - EUT Photograph....58

1. General Information

1.1. Applicant

Shure Incorporated

5800 West Touhy Avenue, Niles, IL 60714-4608, USA

1.2. Manufacturer

Shure Incorporated

5800 West Touhy Avenue, Niles, IL 60714-4608, USA

1.3. Testing Facility

☒	**Test Site - MRT Suzhou Laboratory**	
	Laboratory Location (Suzhou - Wuzhong)	
	D8 Building, No.2 Tian'edang Rd., Wuzhong Economic Development Zone, Suzhou, China	
	Laboratory Location (Suzhou - SIP)	
	4b Building, Liando U Valley, No.200 Xingpu Rd., Shengpu Town, Suzhou Industrial Park, China	
	Laboratory Accreditations	
	A2LA: 3628.01	CNAS: L10551
	FCC: CN1166	ISED: CN0001
	VCCI: R-20025, R-20141, G-20034, G-20134, C-20020, C-20103, T-20020, T-20104	
☐	**Test Site - MRT Shenzhen Laboratory**	
	Laboratory Location (Shenzhen)	
	1G, Building A, Junxiangda Building, Zhongshanyuan Road West, Nanshan District, Shenzhen, China	
	Laboratory Accreditations	
	A2LA: 3628.02	CNAS: L10551
	FCC: CN1284	ISED: CN0105
☐	**Test Site - MRT Taiwan Laboratory**	
	Laboratory Location (Taiwan)	
	No. 38, Fuxing 2nd Rd., Guishan Dist., Taoyuan City 333, Taiwan (R.O.C.)	
	Laboratory Accreditations	
	TAF: L3261-190725	
	FCC: 291082, TW3261	ISED: TW3261

1.4. Product Information

Product Name	Wireless Receiver
Model No.	GLXD4R+ Z3
Serial No.	3AE19575369
Radio Specification	2.4GHz & 5.8GHz
Antenna Specification	Refer to clause 1.7
Power Type	AC/DC Adapter
Accessory	
AC/DC Adapter	Model No.: PS43US Input: 100 ~ 240V, 50/60Hz, 0.25A Output: 15.0V⎓0.6A

Note: The information of EUT was provided by the manufacturer, and the accuracy of the information shall be the responsibility of the manufacturer.

1.5. Radio Specification under Test

Frequency Range	5729 ~ 5846MHz
Bandwidth Mode	Full and Half
Channel Number	55
Channel Spacing	1MHz
Type of Modulation	2-level CPM with Gaussian shaping (basically GFSK)
Antenna Number	2

Note 1: For other features of this EUT, test report will be issued separately.

Note 2: Two RF paths and antenna are the same and only one antenna can work during normal operation, it is switchable.

1.6. Test Frequencies

Operating Bands (MHz)	Test Frequency (MHz)		
	Lowest	Middle	Highest
5729 ~ 5846	5729	5788	5846

Note: Detail working frequencies refer to operation description.

1.7. Antennas Details

Antenna Type	Frequency Band (MHz)	Max Peak Gain (dBi)
Dipole Antenna	5729	2.64
	5788	3.56
	5846	2.96

Note: The two antennas are identical.

2. Test Configuration

2.1. Test Mode

Test Mode	Mode 1: Transmit by Full BW
	Mode 2: Transmit by Half BW

Note: Bandwidth abbreviation is BW.

2.2. Test Setup and Software

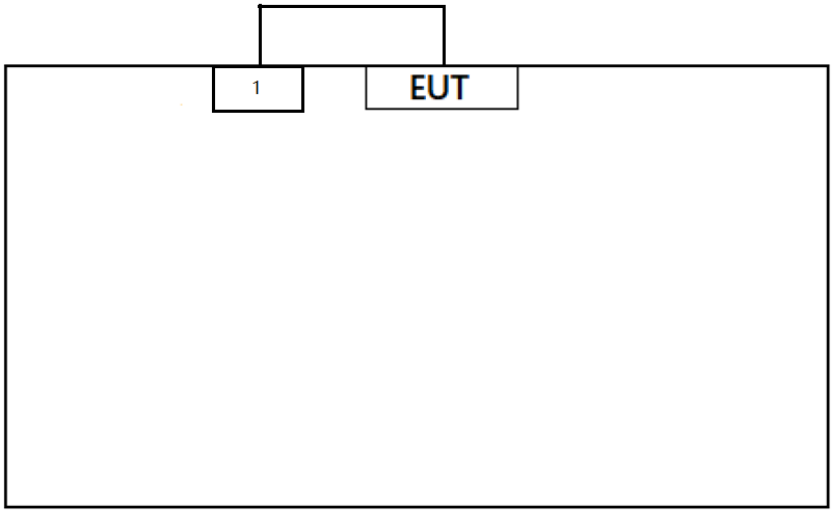

Product		Manufacturer	Model No.
1	Notebook	ThinkPad	E495

Note 1: The test utility software used during testing was “ttermpro.exe”, and the version was 4.78.

Note 2: Detail power setting refer to operation description.

2.3. Duty Cycle

The maximum achievable duty cycles for all modes were determined based on measurements performed on a spectrum analyzer in zero-span mode with RBW = 8MHz, VBW = 50MHz. The RBW and VBW were both greater than 50/T, where T is the minimum transmission duration, and the number of sweep points across T was greater than 100. The duty cycles are as follows:

Test Mode	Duty Cycle
Full BW	60.23%
Half BW	80.28%

Duty Cycle (T = Transmission Duration)	
Full BW (T =602.9μs)	Half BW (T = 1.205ms)
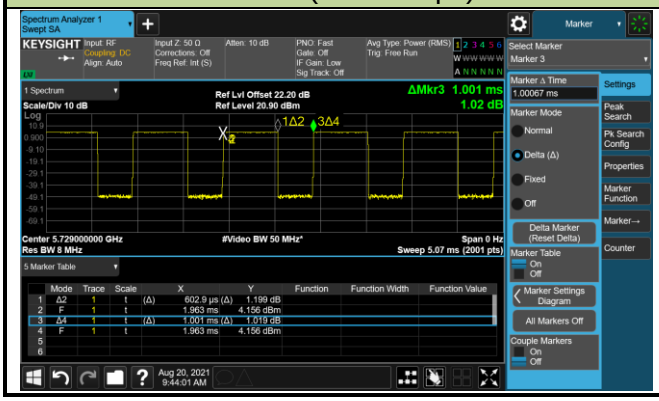	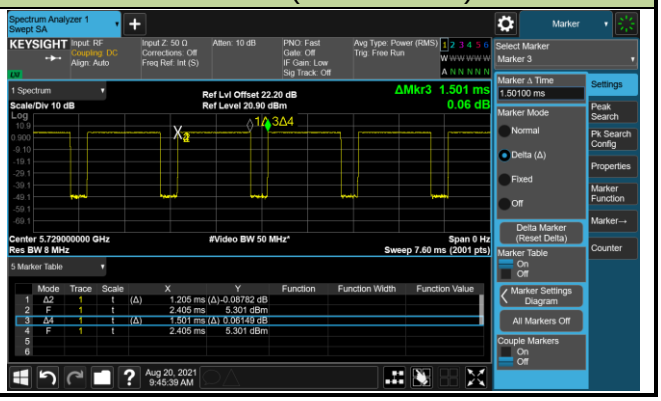

2.4. Applicable Standards

According to the specifications of the manufacturer, the EUT must comply with the requirements of the following standards:

- ANSI C63.10-2013
- FCC KDB 789033 D02v02r01

2.5. Test Environment Condition

Ambient Temperature	15 ~ 35 °C
Relative Humidity	20 ~ 75 %RH

3. Antenna Requirements

Excerpt from §15.203 of the FCC Rules/Regulations:

"An intentional radiator antenna shall be designed to ensure that no antenna other than that furnished by the responsible party can be used with the device. The use of a permanently attached antenna or of an antenna that uses a unique coupling to the intentional radiator shall be considered sufficient to comply with the provisions of this section."

- The antenna of the device is **permanently attached.**
- There are no provisions for connection to an external antenna.

Conclusion:

The unit complies with the requirement of §15.203.

4. Test Equipment Calibration

Conducted Emission (WZ-SR2)

Instrument	Manufacturer	Type No.	Asset No.	Cali. Interval	Cali. Due Date
EMI Test Receiver	R&S	ESR3	MRTSUE06909	1 year	2021/11/22
Two-Line V-Network	R&S	ENV216	MRTSUE06002	1 year	2022/06/08
Thermal Hygrometer	testo	608-H1	MRTSUE06404	1 year	2022/06/28
Shielding Room	MIX-BEP	Chamber-SR2	MRTSUE06215	N/A	N/A

Conducted Emission (SIP-SR2)

Instrument	Manufacturer	Type No.	Asset No.	Cali. Interval	Cali. Due Date
EMI Test Receiver	R&S	ESR3	MRTSUE06613	1 year	2022/06/24
Two-Line V-Network	R&S	ENV216	MRTSUE06003	1 year	2022/06/08
Thermal Hygrometer	testo	608-H1	MRTSUE06621	1 year	2021/12/03

Radiated Emission (WZ-AC1)

Instrument	Manufacturer	Type No.	Asset No.	Cali. Interval	Cali. Due Date
EMI Test Receiver	R&S	ESR7	MRTSUE06001	1 year	2022/01/04
Loop Antenna	Schwarzbeck	FMZB 1519	MRTSUE06025	1 year	2021/11/08
Bilog Period Antenna	Schwarzbeck	VULB 9168	MRTSUE06172	1 year	2022/08/05
Horn Antenna	Schwarzbeck	BBHA 9120D	MRTSUE06023	1 year	2021/09/27
Horn Antenna	Schwarzbeck	BBHA9170	MRTSUE06597	1 year	2021/12/14
Microwave System Amplifier	Agilent	83017A	MRTSUE06076	1 year	2021/11/14
Preamplifier	Schwarzbeck	BBV 9721	MRTSUE06121	1 year	2022/06/09
Thermal Hygrometer	testo	608-H1	MRTSUE06403	1 year	2022/06/28
Anechoic Chamber	TDK	Chamber-AC1	MRTSUE06212	1 year	2022/04/29

Radiated Emission (WZ-AC2)

Instrument	Manufacturer	Type No.	Asset No.	Cali. Interval	Cali. Due Date
MXE EMI Receiver	Keysight	N9038A	MRTSUE06125	1 year	2022/06/24
Loop Antenna	Schwarzbeck	FMZB 1519	MRTSUE06025	1 year	2021/11/08
Bilog Period Antenna	Schwarzbeck	VULB 9162	MRTSUE06022	1 year	2022/05/24
Broad-Band Horn Antenna	Schwarzbeck	BBHA 9120D	MRTSUE06171	1 year	2021/10/25
Horn Antenna	Schwarzbeck	BBHA9170	MRTSUE06597	1 year	2021/12/14
Broadband Coaxial Preamplifier	Schwarzbeck	BBV 9718	MRTSUE06176	1 year	2021/11/14
Thermal Hygrometer	Minggao	ETH529	MRTSUE06170	1 year	2021/12/08
Anechoic Chamber	RIKEN	Chamber-AC2	MRTSUE06213	1 year	2022/04/29

Radiated Emission (SIP-AC1)

Instrument	Manufacturer	Type No.	Asset No.	Cali. Interval	Cali. Due Date
EMI Test Receiver	R&S	ESR3	MRTSUE06612	1 year	2022/06/24
EXA Signal Analyzer	Keysight	N9010B	MRTSUE06559	1 year	2022/06/24
Loop Antenna	Schwarzbeck	FMZB 1519 B	MRTSUE06937	1 year	2022/03/09
Bilog Period Antenna	Schwarzbeck	VULB9168	MRTSUE06645	1 year	2021/08/30
Double Ridged Horn Antenna	R&S	HF907	MRTSUE06610	1 year	2021/08/30
Preamplifier	EMCI	EMC051845SE	MRTSUE06600	1 year	2021/11/09
Thermal Hygrometer	testo	608-H1	MRTSUE06620	1 year	2021/12/03
Anechoic Chamber	RIKEN	SIP-AC1	MRTSUE06554	1 year	2021/12/24

Radiated Emission (SIP-AC2)

Instrument	Manufacturer	Type No.	Asset No.	Cali. Interval	Cali. Due Date
EMI Test Receiver	R&S	ESR3	MRTSUE06613	1 year	2022/06/24
MXA Signal Analyzer	Keysight	N9020B	MRTSUE06604	1 year	2021/09/26
Loop Antenna	Schwarzbeck	FMZB 1519 B	MRTSUE06937	1 year	2022/03/09
Bilog Period Antenna	Schwarzbeck	VULB9168	MRTSUE06646	1 year	2021/08/30
Horn Antenna	Schwarzbeck	BBHA9120D	MRTSUE06648	1 year	2021/11/26
Horn Antenna	Schwarzbeck	BBHA9170	MRTSUE06599	1 year	2021/11/26
Preamplifier	EMCI	EMC051845SE	MRTSUE06644	1 year	2021/11/09
Preamplifier	EMCI	EMC184045SE	MRTSUE06602	1 year	2021/10/12
Thermal Hygrometer	testo	608-H1	MRTSUE06624	1 year	2021/12/03
Anechoic Chamber	RIKEN	SIP-AC2	MRTSUE06781	1 year	2021/12/24

Radiated Emission (SIP-AC3)

Instrument	Manufacturer	Type No.	Asset No.	Cali. Interval	Cali. Due Date
Preamplifier	Schwarzbeck	BBV 9721	MRTSUE06121	1 year	2022/06/09
EMI Test Receiver	R&S	ESR3	MRTSUE06612	1 year	2022/06/24
EXA Signal Analyzer	Keysight	N9010B	MRTSUE06559	1 year	2022/06/24
Loop Antenna	Schwarzbeck	FMZB 1519	MRTSUE06025	1 year	2021/11/08
Bilog Period Antenna	Schwarzbeck	VULB9168	MRTSUE06646	1 year	2021/08/30
Double Ridged Horn Antenna	R&S	HF907	MRTSUE06611	1 year	2021/09/13
Horn Antenna	Schwarzbeck	BBHA9170	MRTSUE06598	1 year	2021/11/26
Preamplifier	EMCI	EMC012645SE	MRTSUE06642	1 year	2022/01/14
Thermal Hygrometer	testo	608-H1	MRTSUE06622	1 year	2021/12/03
Anechoic Chamber	RIKEN	SIP-AC3	MRTSUE06782	1 year	2021/12/24

Conducted Test Equipment (WZ-TR3)

Instrument	Manufacturer	Type No.	Asset No.	Cali. Interval	Cali. Due Date
EXA Signal Analyzer	Agilent	N9020A	MRTSUE06106	1 year	2022/04/13
EXA Signal Analyzer	Keysight	N9010B	MRTSUE06607	1 year	2022/01/06
Power Meter	Agilent	U2021XA	MRTSUE06030	1 year	2021/10/22
USB wideband power sensor	Keysight	U2021XA	MRTSUE06446	1 year	2022/06/08
USB wideband power sensor	Keysight	U2021XA	MRTSUE06447	1 year	2022/06/08
Bluetooth Test Set	Anritsu	MT8852B-042	MRTSUE06389	1 year	2022/06/08
Modulation Analyzer	HP	HP8901A	MRTSUE06098	1 year	2021/09/26
DC Power Supply	GWINSTEK	DPS-3303C	MRTSUE06064	N/A	N/A
Temperature & Humidity Chamber	BAOYT	BYH-150CL	MRTSUE06051	1 year	2021/10/22
Thermal Hygrometer	testo	608-H1	MRTSUE06401	1 year	2022/06/28
Attenuator	MVE	6dB	MRTSUE06534	1 year	N/A
Attenuator	MVE	10dB	MRTSUE06543	1 year	N/A

Conducted Test Equipment (SIP-TR1)

Instrument	Manufacturer	Type No.	Asset No.	Cali. Interval	Cali. Due Date
EXA Signal Analyzer	KEYSIGHT	N9010B	MRTSUE06603	1 year	2021/11/23
PXA Signal Analyzer	Keysight	N9030B	MRTSUE06395	1 year	2021/08/30
USB wideband power sensor	Agilent	U2021XA	MRTSUE06595	1 year	2021/09/26
USB wideband power sensor	Agilent	U2021XA	MRTSUE06596	1 year	2021/09/26
Temperature Chamber	BAOYT	BYG-408CS	MRTSUE06847	1 year	2022/02/23
Thermal Hygrometer	testo	608-H1	MRTSUE11022	1 year	2021/11/25
Attenuator	MVE	6dB	MRTSUE06534	1 year	N/A
Attenuator	MVE	10dB	MRTSUE06543	1 year	N/A

Software	Version	Function
EMI Software	V3	EMI Test Software

5. Measurement Uncertainty

Where relevant, the following test uncertainty levels have been estimated for tests performed on the EUT as specified in CISPR 16-4-2. This uncertainty represents an expanded uncertainty expressed at approximately the 95% confidence level using a coverage factor of k = 2.

AC Conducted Emission Measurement
Measurement Uncertainty for a Level of Confidence of 95% (U=2Uc(y)): 9kHz~150kHz: 3.74dB 150kHz~30MHz: 3.44dB
Radiated Disturbance
Measurement Uncertainty for a Level of Confidence of 95% (U=2Uc(y)): Horizontal: 30MHz~300MHz: 5.04dB 300MHz~1GHz: 4.95dB 1GHz~40GHz: 6.40dB Vertical: 30MHz~300MHz: 5.24dB 300MHz~1GHz: 6.03dB 1GHz~40GHz: 6.40dB
Spurious Emissions, Conducted
Measuring Uncertainty for a Level of Confidence of 95% (U=2Uc(y)): 0.78dB
Output Power
Measuring Uncertainty for a Level of Confidence of 95% (U=2Uc(y)): 1.13dB
Power Spectrum Density
Measuring Uncertainty for a Level of Confidence of 95% (U=2Uc(y)): 1.15dB
Occupied Bandwidth
Measuring Uncertainty for a Level of Confidence of 95% (U=2Uc(y)): 0.28%

6. Test Result

6.1. Summary

FCC Section(s)	Test Description	Test Condition	Test Result	Reference
15.407(a)	26dB Bandwidth	Conducted	Pass	Section 6.2
15.407(e)	6dB Bandwidth		Pass	Section 6.3
15.407(a) (3)	Maximum Conducted Output Power		Pass	Section 6.4
15.407(a) (3)	Power Spectral Density		Pass	Section 6.5
15.407(g)	Frequency Stability		Pass	Section 6.6
15.407(b) (4)(i)	Undesirable Emissions	Radiated	Pass	Section 6.7
15.205, 15.209 15.407(b)(5), (6), (7)	General Field Strength (Restricted Bands and Radiated Emission)		Pass	Section 6.8
15.207	AC Conducted Emissions 150kHz-30MHz	Line Conducted	Pass	Section 6.9

Notes:

1) The analyzer plots shown in this section were all taken with a correction table loaded into the analyzer. The correction table was used to account for the losses of the cables and attenuators used as part of the system to connect the EUT to the analyzer at all frequencies of interest.
2) All modes of operation and data rates were investigated. For radiated emission test, every axis (X, Y, Z) was also verified. The test results shown in the following sections represent the worst-case emissions.
3) “N/A” means that the test item is not applicable, and the details refer to relevant section.
4) Test Item “Output Power” was assessed two antenna ports, any others test items were assessed the worst-case antenna port.

6.2. Emission Bandwidth Measurement

6.2.1.Test Limit

N/A

6.2.2.Test Procedure Used

KDB 789033 D02v02r01 -Section C.1

6.2.3.Test Setting

1. Set RBW = approximately 1% of the emission bandwidth.
2. Set the VBW > RBW.
3. Detector = Peak.
4. Trace mode = max hold.
5. Measure the maximum width of the emission that is 26 dB down from the maximum of the emission. Compare this with the RBW setting of the analyzer. Readjust RBW and repeat measurement as needed until the RBW/EBW ratio is approximately 1%.

6.2.4.Test Setup

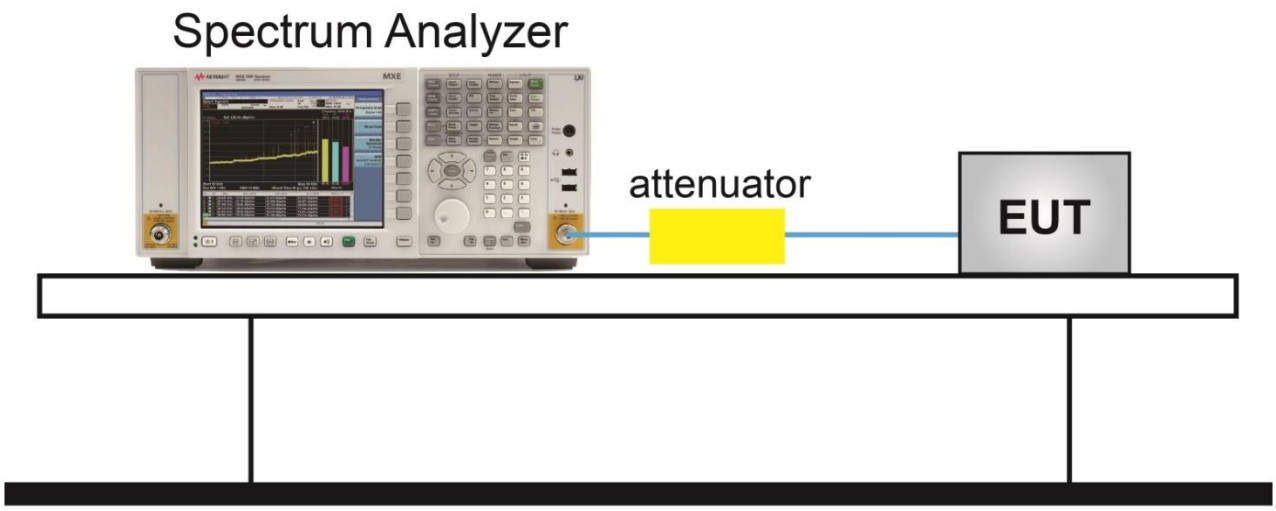

6.2.5.Test Result

Test Site	SIP-TR1	Test Engineer	Alisa Deng
Test Date	2021/08/04 ~ 2021/08/13		

Test Mode	Frequency (MHz)	26dB Bandwidth (MHz)
Full BW	5729	4.00
Full BW	5788	4.00
Full BW	5846	4.00
Half BW	5729	2.00
Half BW	5788	2.00
Half BW	5846	2.00

Full BW 26dB Bandwidth	
5729MHz	5788MHz
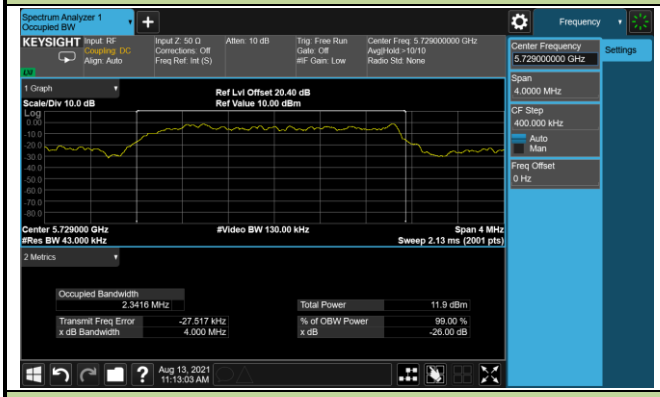	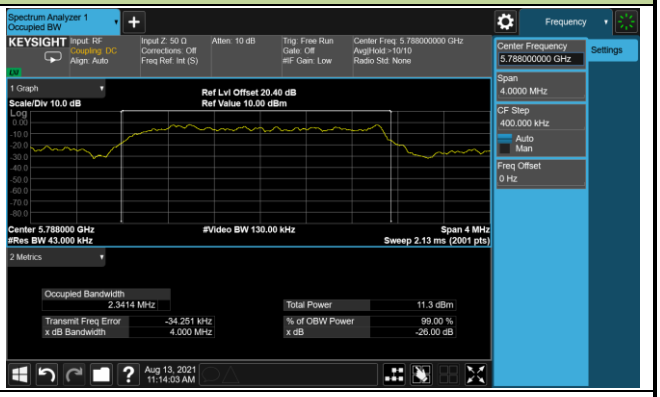
5846MHz	
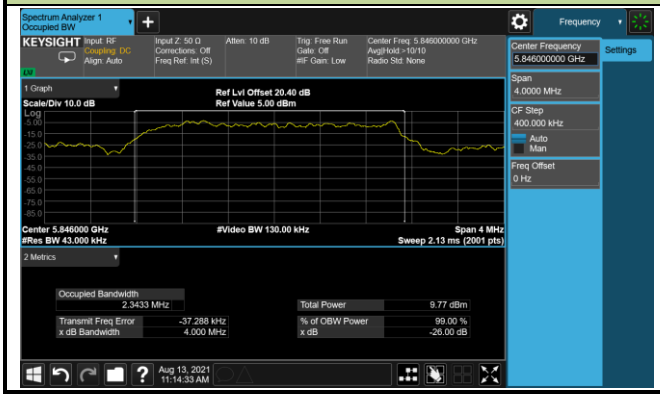	

Half BW 26dB Bandwidth	
5729MHz	5788MHz
5846MHz	

6.3. 6dB Bandwidth Measurement

6.3.1.Test Limit

The minimum 6dBbandwidth shall be at least 500 kHz.

6.3.2.Test Procedure Used

KDB 789033 D02v02r01 - Section C.2

6.3.3.Test Setting

1. Set center frequency to the nominal EUT channel center frequency.
2. RBW = 100 kHz.
3. VBW≥ 3 × RBW.
4. Detector = Peak.
5. Trace mode = Max hold.
6. Sweep = Auto couple.
7. Allow the trace to stabilize.
8. Measure the maximum width of the emission that is constrained by the frequencies associated with the two outermost amplitude points (upper and lower frequencies) that are attenuated by 6 dB relative to the maximum level measured in the fundamental emission.

6.3.4.Test Setup

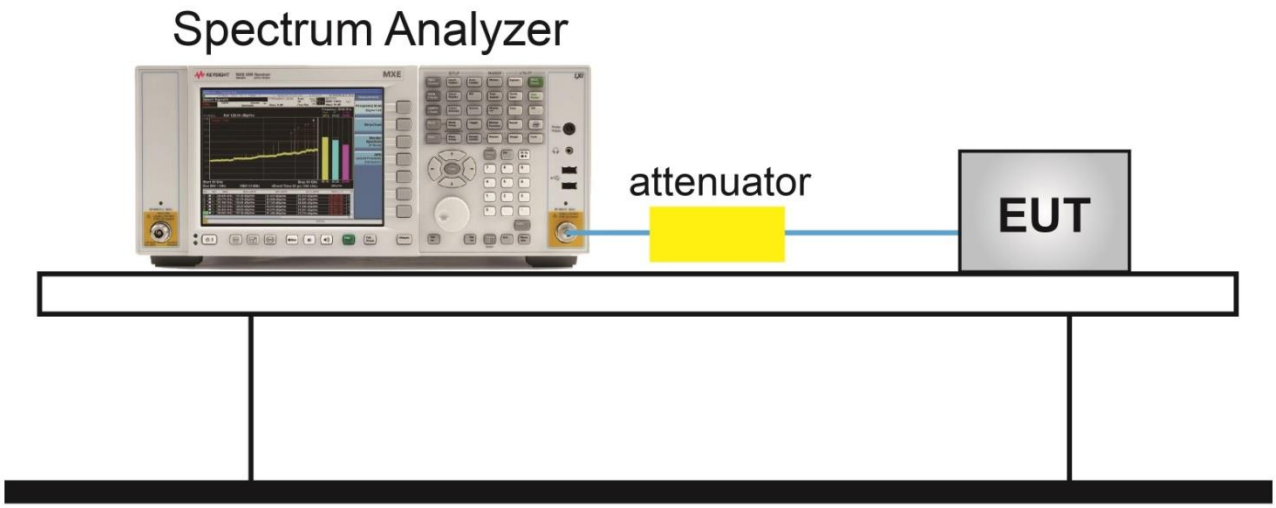

6.3.5.Test Result

Test Site	SIP-TR1	Test Engineer	Alisa Deng
Test Date	2021/08/04		

Test Mode	Frequency (MHz)	6dB Bandwidth (MHz)	Limit (MHz)	Result
Full BW	5729	2.060	≥ 0.5	Pass
Full BW	5788	2.075	≥ 0.5	Pass
Full BW	5846	2.094	≥ 0.5	Pass
Half BW	5729	1.037	≥ 0.5	Pass
Half BW	5788	1.068	≥ 0.5	Pass
Half BW	5846	1.054	≥ 0.5	Pass

Full BW 6dB Bandwidth

5729MHz

5788MHz

5846MHz

Half BW 6dB Bandwidth	
5729MHz	5788MHz
	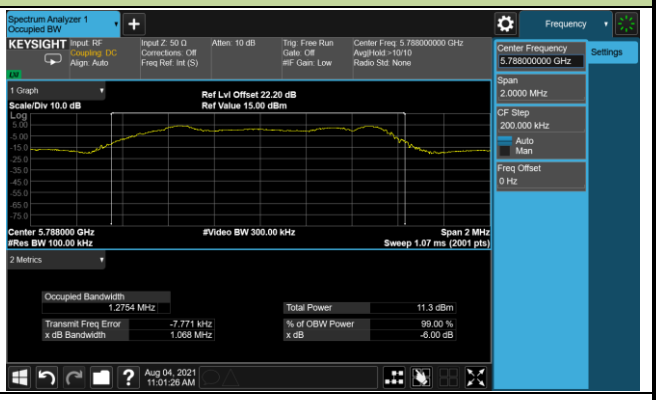
5846MHz	

6.4. Output Power Measurement

6.4.1.Test Limit

For the band 5.725-5.85 GHz, the maximum conducted output power over the frequency band of operation shall not exceed 1 W (30dBm).

If transmitting antennas of directional gain greater than 6dBi are used, the maximum conducted output power shall be reduced by the amount in dB that the directional gain of the antenna exceeds 6dBi.

6.4.2.Test Procedure Used

KDB 789033D02v02r01- Section E)3)b) Method PM-G

6.4.3.Test Setting

Average power measurements were perform only when the EUT was transmitting at its maximum power control level using a broadband power meter with a pulse sensor. The power meter implemented triggering and gating capabilities which were set up such that power measurements were recorded only during the ON time of the transmitter.

6.4.4.Test Setup

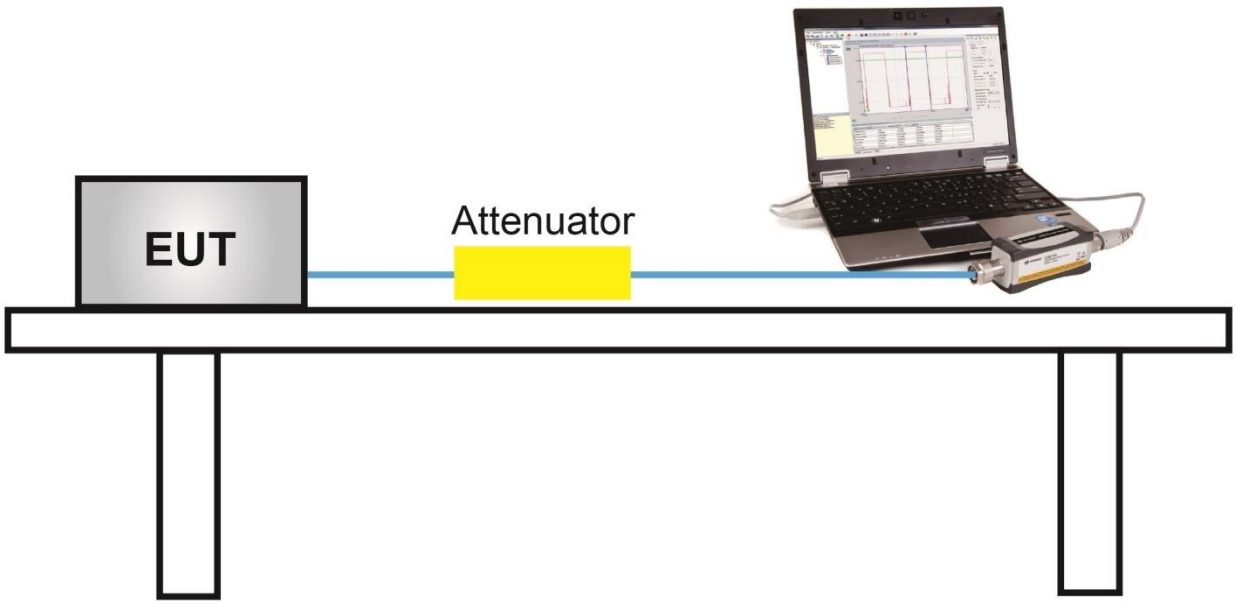

6.4.5.Test Result

Test Site	SIP-TR1	Test Engineer	Alisa Deng
Test Date	2021/08/02		

Test Mode	Freq. (MHz)	Average Power (dBm)		Power Limit (dBm)	Result
		Ant a	Ant b		
Full BW	5729	4.28	4.41	≤ 30.00	Pass
Full BW	5788	3.73	4.13	≤ 30.00	Pass
Full BW	5846	2.37	2.55	≤ 30.00	Pass
Half BW	5729	4.02	4.47	≤ 30.00	Pass
Half BW	5788	3.60	4.15	≤ 30.00	Pass
Half BW	5846	2.16	2.54	≤ 30.00	Pass

6.5. Power Spectral Density Measurement

6.5.1.Test Limit

For the band 5.725-5.85 GHz, the maximum power spectral density shall not exceed 30 dBm in any 500-kHz band.

If transmitting antennas of directional gain greater than 6dBi are used, the peak power spectral density shall be reduced by the amount in dB that the directional gain of the antenna exceeds 6dBi.

6.5.2.Test Procedure Used

KDB 789033 D02v02r01 - Section F

6.5.3.Test Setting

1. Analyzer was set to the center frequency of the UNII channel under investigation
2. Span was set to encompass the entire 26dB EBW of the signal.
   RBW = 510kHz
   VBW = 1.5MHz
3. Number of sweep points ≥ 2 × (span / RBW)
4. Detector = Power averaging (Average)
5. Trace average at least 100 traces in power averaging (rms) mode
6. Sweep time = Auto
7. Trigger = Free run
8. Use the peak search function on the instrument to find the peak of the spectrum and record its value.
9. Add 10*log(1/x), where x is the duty cycle, to the measured power in order to compute the average power during the actual transmission times (because the measurement represents an average over both the on and off times of the transmission). For example, add 10*log(1/0.25) = 6 dB if the duty cycle is 25 percent.

6.5.4.Test Setup

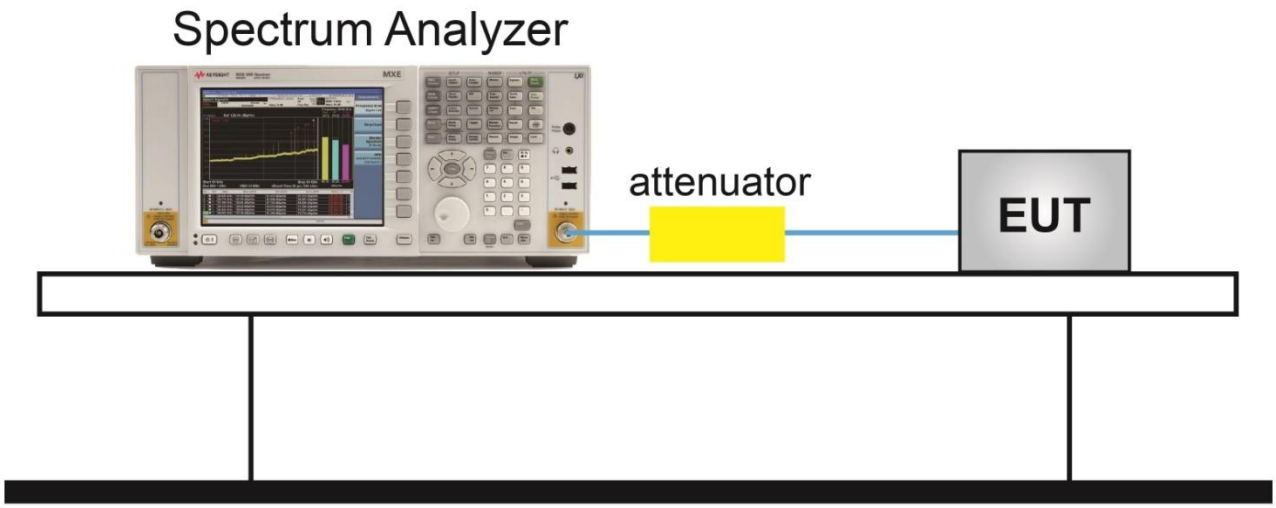

6.5.5.Test Result

Test Site	SIP-TR1	Test Engineer	Alisa Deng
Test Date	2021/08/04		

Test Mode	Freq. (MHz)	Duty Cycle (%)	PSD (dBm / 510kHz)	Final PSD (dBm / 510kHz)	Limit (dBm / 500kHz)	Result
Full BW	5729	60.23	-1.55	0.65	≤ 30.00	Pass
Full BW	5788	60.23	-1.66	0.54	≤ 30.00	Pass
Full BW	5846	60.23	-3.28	-1.08	≤ 30.00	Pass
Half BW	5729	80.28	1.76	2.71	≤ 30.00	Pass
Half BW	5788	80.28	1.48	2.43	≤ 30.00	Pass
Half BW	5846	80.28	0.23	1.19	≤ 30.00	Pass

Note: When EUT duty cycle < 98%, Final PSD (dBm / 510kHz) = PSD (dBm / 510kHz) + 10*log(1/Duty cycle)

Full BW Power Spectral Density - Ant b

5729MHz

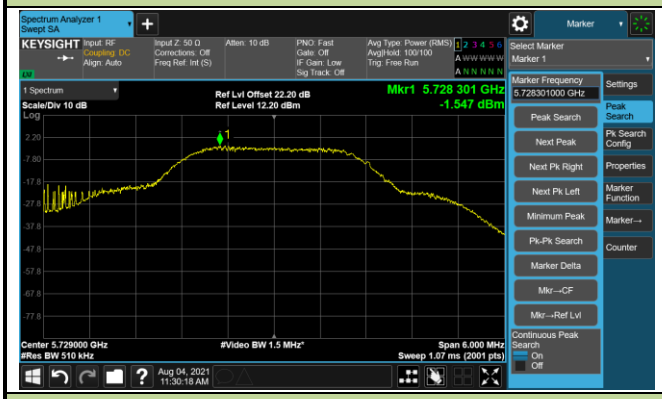

5788MHz

5846MHz

Half BW Power Spectral Density - Ant b

5729MHz

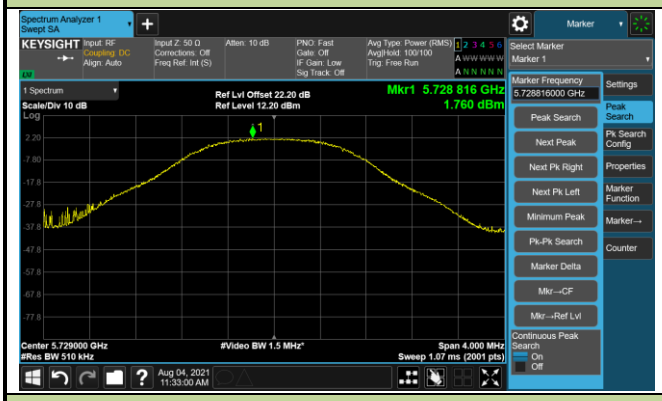

5788MHz

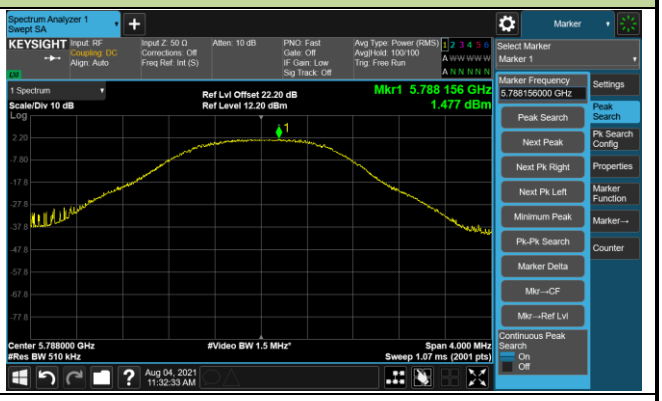

5846MHz

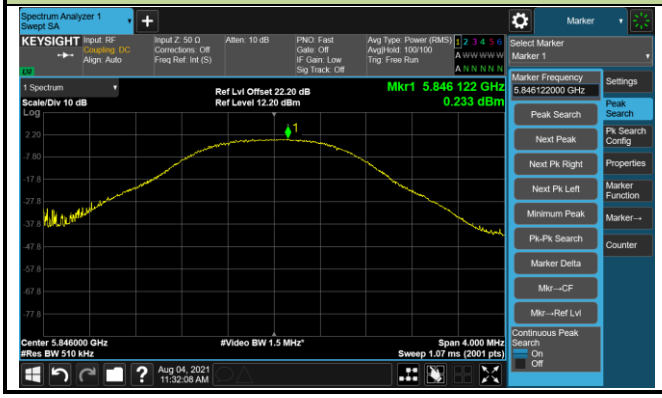

6.6. Frequency Stability Measurement

6.6.1.Test Limit

Manufactures of U-NII devices are responsible for ensuring frequency stability such that an emission is maintained within the band of operation under all conditions of normal operation as specified in the user's manual.

6.6.2.Test Procedure Used

Frequency Stability Under Temperature Variations:

The equipment under test was connected to an external AC or DC power supply and input rated voltage. RF output was connected to a frequency counter or spectrum analyzer via feed through attenuators. The EUT was placed inside the temperature chamber. Set the spectrum analyzer RBW low enough to obtain the desired frequency resolution and measure EUT 20°C operating frequency as reference frequency. Turn EUT off and set the chamber temperature to highest. After the temperature stabilized for approximately 30 minutes recorded the frequency. Repeat step measure with 10°C decreased per stage until the lowest temperature reached.

Frequency Stability Under Voltage Variations:

Set chamber temperature to 20°C. Use a variable AC power supply / DC power source to power the EUT and set the voltage to rated voltage. Set the spectrum analyzer RBW low enough to obtain the desired frequency resolution and recorded the frequency.

Reduce the input voltage to specify extreme voltage variation (±15%) and endpoint, record the maximum frequency change. For hand-carried battery-powered equipment, primary supply voltage is reduced to the battery operating end point which shall be specified by the manufacturer.

6.6.3.Test Setup

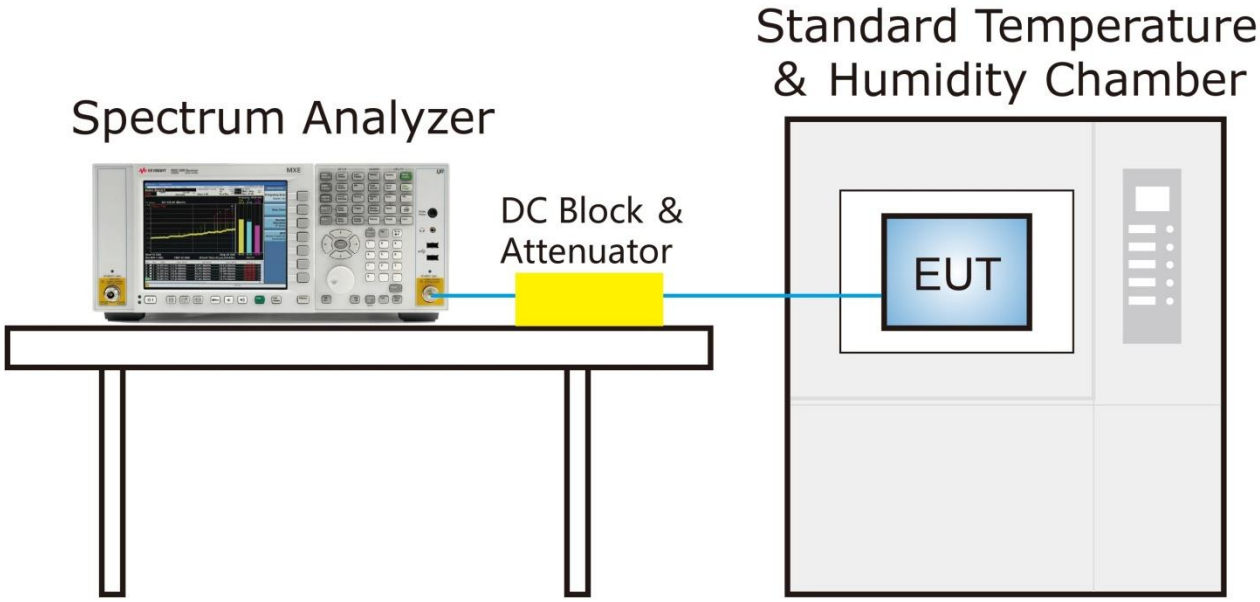

6.6.4.Test Result

Test Site	SIP-TR1	Test Engineer	Alisa Deng
Test Date	2021/08/04 ~ 2021/08/05	Test Channel	5729MHz (Carrier Mode)

Voltage (%)	Power (V_{AC})	Temp (°C)	Frequency Tolerance (ppm)			
			0 minutes	2 minutes	5 minutes	10 minutes
100	120	- 30	15.26	15.00	13.43	12.53
		- 20	14.89	14.53	14.77	14.16
		- 10	13.52	11.81	12.83	13.36
		0	14.45	13.73	14.01	13.08
		+ 10	11.11	7.91	9.81	11.71
		+ 20	5.13	7.34	7.10	5.58
		+ 30	4.57	5.13	4.54	4.25
		+ 40	2.10	2.35	1.99	1.06
		+ 50	0.68	1.32	3.80	2.14
90	108	+ 20	8.79	8.51	10.20	6.37
110	132	+ 20	5.97	7.28	7.38	7.91

Note 1: Frequency Tolerance (ppm) = {[Measured Frequency (MHz) - Declared Frequency (MHz)] / Declared Frequency (MHz)} *10^6.

6.7. Radiated Spurious Emission Measurement

6.7.1.Test Limit

All out of band emissions appearing in a restricted band as specified in Section 15.205 of the Title 47 CFR must not exceed the limits shown in Table per Section 15.209.

FCC Part 15 Subpart C Paragraph 15.209		
Frequency (MHz)	Field Strength (μV/m)	Measured Distance (m)
0.009 - 0.490	2400/F (kHz)	300
0.490 - 1.705	24000/F (kHz)	30
1.705 - 30	30	30
30 - 88	100	3
88 - 216	150	3
216 - 960	200	3
Above 960	500	3

6.7.2.Test Procedure Used

KDB 789033 D02v02r01- Section G

6.7.3.Test Setting

Table 1 - RBW as a function of frequency

Frequency	RBW
9 ~ 150 kHz	200 ~ 300 Hz
0.15 ~ 30 MHz	9 ~ 10 kHz
30 ~ 1000 MHz	100 ~ 120 kHz
> 1000 MHz	1 MHz

Quasi-Peak Measurements below 1GHz

1. Analyzer center frequency was set to the frequency of the radiated spurious emission of interest
2. Span was set greater than 1MHz
3. RBW = as specified in Table 1
4. Detector = CISPR quasi-peak
5. Sweep time = auto couple
6. Trace was allowed to stabilize

Peak Measurements above 1GHz

1. Analyzer center frequency was set to the frequency of the radiated spurious emission of interest
2. RBW = 1MHz
3. VBW = 3MHz
4. Detector = peak
5. Sweep time = auto couple
6. Trace mode = max hold
7. Trace was allowed to stabilize

Average Measurements above 1GHz (Method VB)

1. Analyzer center frequency was set to the frequency of the radiated spurious emission of interest
2. RBW = 1MHz
3. VBW;If the EUT is configured to transmit with duty cycle ≥ 98%, set VBW = 10Hz

   If the EUT duty cycle is < 98%, set VBW ≥ 1/T. T is the minimum transmission duration
4. Detector = Peak
5. Sweep time = auto
6. Trace mode = max hold
7. Trace was allowed to stabilize

6.7.4.Test Setup

Below 1GHz Test Setup:

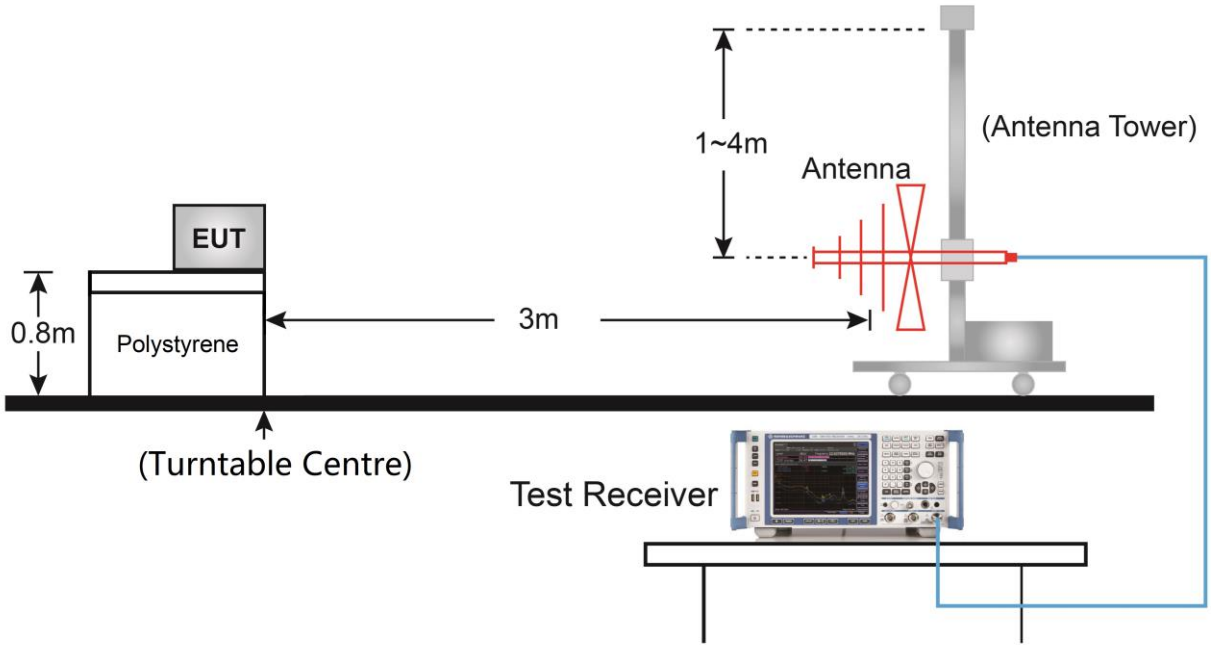

Above1GHz Test Setup:

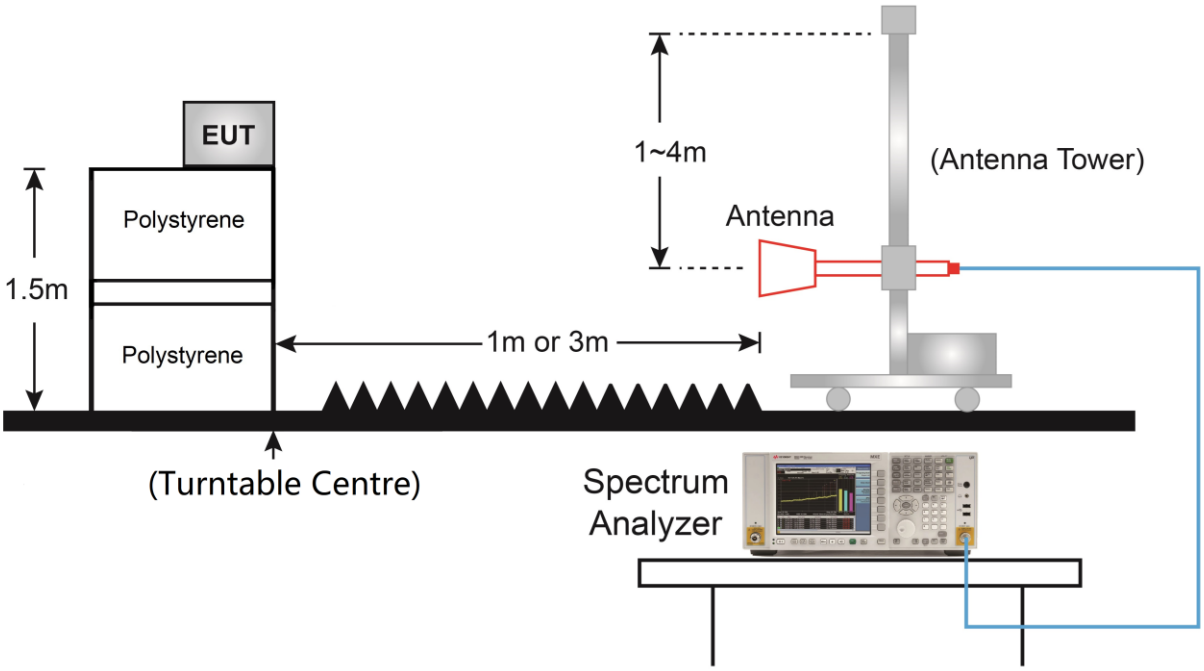

6.7.5.Test Result

Test Site	SIP-AC3	Test Engineer	Yien Qian
Test Date	2021/08/14	Test Frequency	5729MHz
Test Mode	Full BW		
Remark	1. Average measurement was not performed if peak level lower than average limit. 2. Other frequency was 20dB below limit line within 1-18GHz, there is not show in the report.		

Mark	Frequency (MHz)	Reading Level (dBμV)	Factor (dB)	Measure Level (dBμV/m)	Limit (dBμV/m)	Margin (dB)	Detector	Polarization
	8131.50	51.17	-4.39	46.78	74.00	-27.22	Peak	Horizontal
*	10137.50	49.90	-2.71	47.19	68.20	-21.01	Peak	Horizontal
	12390.00	48.97	-1.97	47.00	74.00	-27.00	Peak	Horizontal
*	14226.00	48.48	2.02	50.50	68.20	-17.70	Peak	Horizontal
	7732.00	52.30	-4.96	47.34	74.00	-26.66	Peak	Vertical
*	10120.50	48.95	-2.53	46.42	68.20	-21.78	Peak	Vertical
	11880.00	50.57	-2.71	47.86	74.00	-26.14	Peak	Vertical
*	14268.50	48.57	1.90	50.47	68.20	-17.73	Peak	Vertical

Note 1: “*” is not in restricted band, its limit is -27dBm/MHz. At a distance of 3 meters, the field strength limit in dBμV/m can be determined by adding a “conversion” factor of 95.2dB to the EIRP limit of -27dBm/MHz to obtain the limit for out of band spurious emissions.

Note 2: Measure Level (dBμV/m) = Reading Level (dBμV) + Factor (dB)

Factor (dB) = Cable Loss (dB) + Antenna Factor (dB/m) - Pre_Amplifier Gain (dB)

Test Site	SIP-AC3	Test Engineer	Yien Qian
Test Date	2021/08/14	Test Frequency	5788MHz
Test Mode	Full BW		
Remark	1. Average measurement was not performed if peak level lower than average limit. 2. Other frequency was 20dB below limit line within 1-18GHz, there is not show in the report.		

Mark	Frequency (MHz)	Reading Level (dBμV)	Factor (dB)	Measure Level (dBμV/m)	Limit (dBμV/m)	Margin (dB)	Detector	Polarization
	8148.50	50.57	-4.32	46.25	74.00	-27.75	Peak	Horizontal
*	10061.00	49.55	-2.65	46.90	68.20	-21.30	Peak	Horizontal
	12415.50	49.87	-1.61	48.26	74.00	-25.74	Peak	Horizontal
*	14234.50	48.79	1.93	50.72	68.20	-17.48	Peak	Horizontal
	9610.50	51.00	-3.01	47.99	68.20	-20.21	Peak	Vertical
*	11820.50	50.15	-2.70	47.45	74.00	-26.55	Peak	Vertical
	14175.00	48.93	1.83	50.76	68.20	-17.44	Peak	Vertical
*	15475.50	47.96	3.75	51.71	74.00	-22.29	Peak	Vertical

Note 1: “*” is not in restricted band, its limit is -27dBm/MHz. At a distance of 3 meters, the field strength limit in dBμV/m can be determined by adding a “conversion” factor of 95.2dB to the EIRP limit of -27dBm/MHz to obtain the limit for out of band spurious emissions.

Note 2: Measure Level (dBμV/m) = Reading Level (dBμV) + Factor (dB)

Factor (dB) = Cable Loss (dB) + Antenna Factor (dB/m) - Pre_Amplifier Gain (dB)

Test Site	SIP-AC3	Test Engineer	Yien Qian
Test Date	2021/08/14	Test Frequency	5846MHz
Test Mode	Full BW		
Remark	1. Average measurement was not performed if peak level lower than average limit. 2. Other frequency was 20dB below limit line within 1-18GHz, there is not show in the report.		

Mark	Frequency (MHz)	Reading Level (dBμV)	Factor (dB)	Measure Level (dBμV/m)	Limit (dBμV/m)	Margin (dB)	Detector	Polarization
	10103.50	49.65	-2.38	47.27	68.20	-20.93	Peak	Horizontal
*	12373.00	49.59	-2.27	47.32	74.00	-26.68	Peak	Horizontal
	13954.00	48.34	1.16	49.50	68.20	-18.70	Peak	Horizontal
*	16045.00	46.39	4.89	51.28	74.00	-22.72	Peak	Horizontal
	8072.00	50.92	-4.48	46.44	74.00	-27.56	Peak	Vertical
*	10112.00	49.14	-2.40	46.74	68.20	-21.46	Peak	Vertical
	11931.00	50.36	-2.67	47.69	74.00	-26.31	Peak	Vertical
*	14175.00	48.99	1.83	50.82	68.20	-17.38	Peak	Vertical

Note 1: “*” is not in restricted band, its limit is -27dBm/MHz. At a distance of 3 meters, the field strength limit in dBμV/m can be determined by adding a “conversion” factor of 95.2dB to the EIRP limit of -27dBm/MHz to obtain the limit for out of band spurious emissions.

Note 2: Measure Level (dBμV/m) = Reading Level (dBμV) + Factor (dB)

Factor (dB) = Cable Loss (dB) + Antenna Factor (dB/m) - Pre_Amplifier Gain (dB)

Test Site	SIP-AC3	Test Engineer	Yien Qian
Test Date	2021/08/14	Test Frequency	5729MHz
Test Mode	Half BW		
Remark	1. Average measurement was not performed if peak level lower than average limit. 2. Other frequency was 20dB below limit line within 1-18GHz, there is not show in the report.		

Mark	Frequency (MHz)	Reading Level (dBμV)	Factor (dB)	Measure Level (dBμV/m)	Limit (dBμV/m)	Margin (dB)	Detector	Polarization
	8131.50	50.54	-4.39	46.15	74.00	-27.85	Peak	Horizontal
*	10112.00	49.10	-2.40	46.70	68.20	-21.50	Peak	Horizontal
	11786.50	50.32	-2.56	47.76	74.00	-26.24	Peak	Horizontal
*	14132.50	48.30	1.83	50.13	68.20	-18.07	Peak	Horizontal
	8089.00	50.86	-4.65	46.21	74.00	-27.79	Peak	Vertical
*	9593.50	51.09	-3.05	48.04	68.20	-20.16	Peak	Vertical
	11897.00	50.40	-2.16	48.24	74.00	-25.76	Peak	Vertical
*	14234.50	48.66	1.93	50.59	68.20	-17.61	Peak	Vertical

Note 1: "*" is not in restricted band, its limit is -27dBm/MHz. At a distance of 3 meters, the field strength limit in dBμV/m can be determined by adding a "conversion" factor of 95.2dB to the EIRP limit of -27dBm/MHz to obtain the limit for out of band spurious emissions.

Note 2: Measure Level (dBμV/m) = Reading Level (dBμV) + Factor (dB)

Factor (dB) = Cable Loss (dB) + Antenna Factor (dB/m) - Pre_Amplifier Gain (dB)

Test Site	SIP-AC3	Test Engineer	Yien Qian
Test Date	2021/08/14	Test Frequency	5788MHz
Test Mode	Half BW		
Remark	1. Average measurement was not performed if peak level lower than average limit. 2. Other frequency was 20dB below limit line within 1-18GHz, there is not show in the report.		

Mark	Frequency (MHz)	Reading Level (dBμV)	Factor (dB)	Measure Level (dBμV/m)	Limit (dBμV/m)	Margin (dB)	Detector	Polarization
	8284.50	50.43	-4.10	46.33	74.00	-27.67	Peak	Horizontal
*	10112.00	49.46	-2.40	47.06	68.20	-21.14	Peak	Horizontal
	12398.50	50.20	-1.72	48.48	74.00	-25.52	Peak	Horizontal
*	14149.50	48.27	1.90	50.17	68.20	-18.03	Peak	Horizontal
	8089.00	51.26	-4.65	46.61	74.00	-27.39	Peak	Vertical
*	10095.00	49.47	-2.37	47.10	68.20	-21.10	Peak	Vertical
	12415.50	50.21	-1.61	48.60	74.00	-25.40	Peak	Vertical
*	14158.00	48.82	1.88	50.70	68.20	-17.50	Peak	Vertical

Note 1: “*” is not in restricted band, its limit is -27dBm/MHz. At a distance of 3 meters, the field strength limit in dBμV/m can be determined by adding a “conversion” factor of 95.2dB to the EIRP limit of -27dBm/MHz to obtain the limit for out of band spurious emissions.

Note 2: Measure Level (dBμV/m) = Reading Level (dBμV) + Factor (dB)

Factor (dB) = Cable Loss (dB) + Antenna Factor (dB/m) - Pre_Amplifier Gain (dB)

Test Site	SIP-AC3	Test Engineer	Yien Qian
Test Date	2021/08/14	Test Frequency	5846MHz
Test Mode	Half BW		
Remark	1. Average measurement was not performed if peak level lower than average limit. 2. Other frequency was 20dB below limit line within 1-18GHz, there is not show in the report.		

Mark	Frequency (MHz)	Reading Level (dBμV)	Factor (dB)	Measure Level (dBμV/m)	Limit (dBμV/m)	Margin (dB)	Detector	Polarization
	8089.00	50.77	-4.65	46.12	74.00	-27.88	Peak	Horizontal
*	10112.00	49.26	-2.40	46.86	68.20	-21.34	Peak	Horizontal
	12407.00	49.38	-1.47	47.91	74.00	-26.09	Peak	Horizontal
*	14158.00	48.53	1.88	50.41	68.20	-17.79	Peak	Horizontal
	8352.50	49.99	-4.05	45.94	74.00	-28.06	Peak	Vertical
*	10129.00	50.43	-2.67	47.76	68.20	-20.44	Peak	Vertical
	11914.00	49.85	-2.45	47.40	74.00	-26.60	Peak	Vertical
*	14158.00	48.57	1.88	50.45	68.20	-17.75	Peak	Vertical

Note 1: “*” is not in restricted band, its limit is -27dBm/MHz. At a distance of 3 meters, the field strength limit in dBμV/m can be determined by adding a “conversion” factor of 95.2dB to the EIRP limit of -27dBm/MHz to obtain the limit for out of band spurious emissions.

Note 2: Measure Level (dBμV/m) = Reading Level (dBμV) + Factor (dB)

Factor (dB) = Cable Loss (dB) + Antenna Factor (dB/m) - Pre_Amplifier Gain (dB)

The Result of Radiated Emission below 1GHz:

Site: SIP-AC1	Time: 2021/08/11 - 17:11
Limit: FCC_Part15.209_RSE(3m)	Engineer: Yien Qian
Probe: SIP-AC1_VULB 9168 _30-1000MHz	Polarity: Horizontal
EUT: Wireless Receiver	Power: AC 120V/60Hz
Test Mode: Transmit by Full Band at Channel 5729MHz	

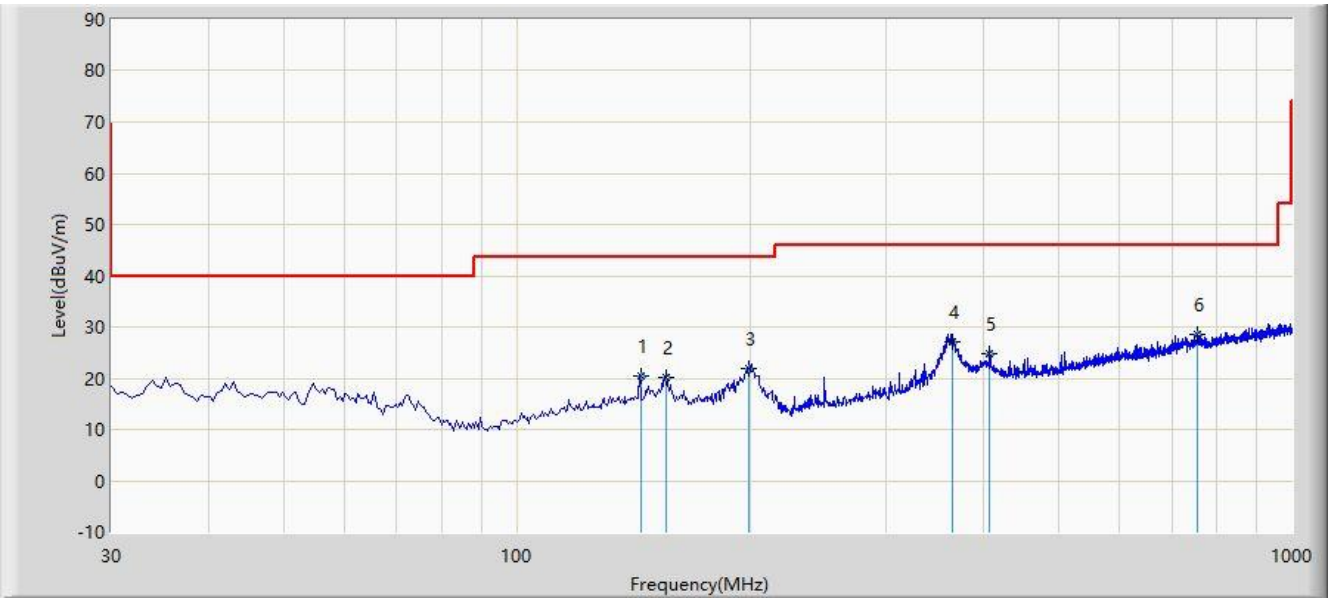

No	Flag	Mark	Frequency (MHz)	Measure Level (dBuV/m)	Reading Level (dBuV)	Margin (dB)	Limit (dBuV/m)	Factor (dB)	Type
1			144.570	20.493	2.640	-23.007	43.500	17.853	QP
2			155.679	20.187	2.140	-23.313	43.500	18.047	QP
3			199.670	21.915	7.360	-21.585	43.500	14.555	QP
4			364.580	27.048	7.370	-18.952	46.000	19.678	QP
5			407.280	24.687	3.960	-21.313	46.000	20.727	QP
6		*	756.423	28.615	1.000	-17.385	46.000	27.615	QP

Note 1: Measure Level (dBμV/m) = Reading Level (dBμV) + Factor (dB)

Factor (dB) = Cable Loss (dB) + Antenna Factor (dB/m)

Note 2: The amplitude of radiated emissions (frequency range from 9kHz to 30MHz and 18GHz to 40GHz) is that proximity to ambient noise, which also are attenuated more than 20 dB below the permissible value. Therefore, the data is not presented in the report.

Site: SIP-AC1	Time: 2021/08/11 - 17:15
Limit: FCC_Part15.209_RSE(3m)	Engineer: Yien Qian
Probe: SIP-AC1_VULB 9168 _30-1000MHz	Polarity: Vertical
EUT: Wireless Receiver	Power: AC 120V/60Hz
Test Mode: Transmit by Full Band at Channel 5729MHz	

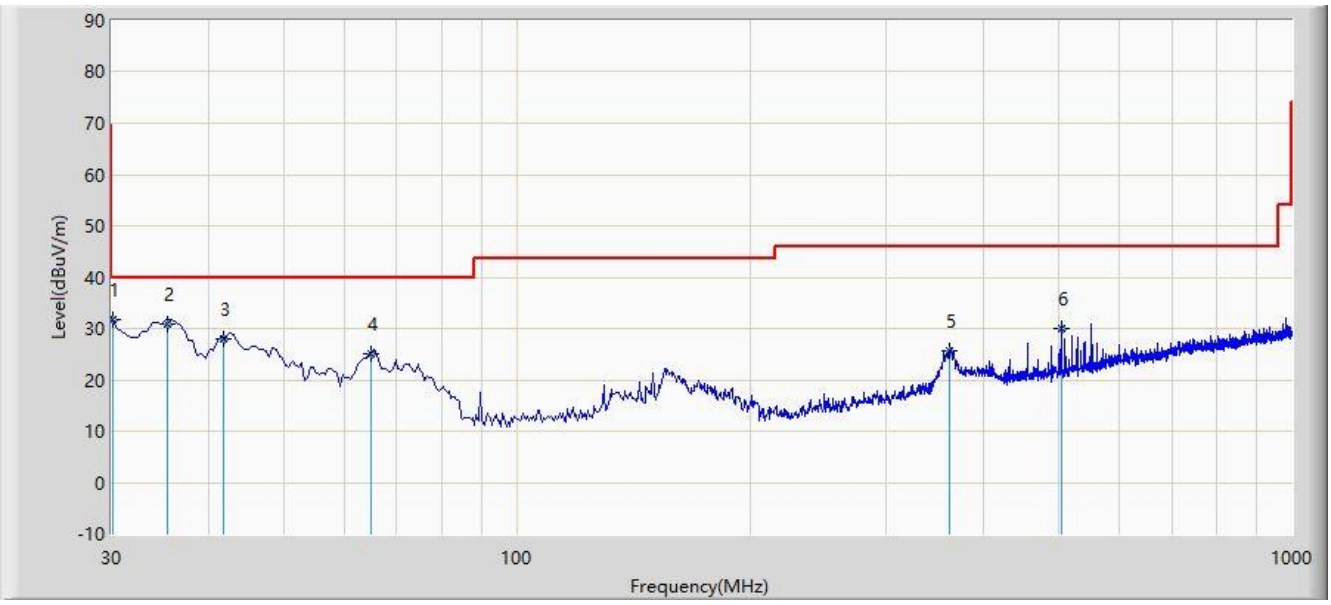

No	Flag	Mark	Frequency (MHz)	Measure Level (dBuV/m)	Reading Level (dBuV)	Margin (dB)	Limit (dBuV/m)	Factor (dB)	Type
1		*	30.140	31.725	14.974	-8.275	40.000	16.750	QP
2			35.479	30.789	13.746	-9.211	40.000	17.043	QP
3			41.784	27.855	10.247	-12.145	40.000	17.608	QP
4			64.751	25.053	8.640	-14.947	40.000	16.413	QP
5			361.497	25.664	6.114	-20.336	46.000	19.550	QP
6			504.387	30.057	7.214	-15.943	46.000	22.843	QP

Note 1: Measure Level (dBμV/m) = Reading Level (dBμV) + Factor (dB)

Factor (dB) = Cable Loss (dB) + Antenna Factor (dB/m)

Note 2: The amplitude of radiated emissions (frequency range from 9kHz to 30MHz and 18GHz to 40GHz) is that proximity to ambient noise, which also are attenuated more than 20 dB below the permissible value. Therefore, the data is not presented in the report.

6.8. Radiated Restricted Band Edge Measurement

6.8.1.Test Limit

For 15.205Requirement:

Radiated emissions which fall in the restricted bands, as defined in Section 15.205(a) of FCC part 15, must also comply with the radiated emission limits specified in Section 15.209(a).

Frequency (MHz)	Frequency (MHz)	Frequency (MHz)	Frequency (GHz)
0.090 - 0.110	16.42-16.423	399.9 - 410	4.5-5.15
[1] 0.495 - 0.505	16.69475-16.69525	608 - 614	5.35-5.46
2.1735-2.1905	16.80425-16.80475	960 - 1240	7.25-7.75
4.125-4.128	25.5 -25.67	1300 - 1427	8.025 - 8.5
4.17725-4.17775	37.5-38.25	1435-1626.5	9.0-9.2
4.20725-4.20775	73-74.6	1645.5-1646.5	9.3-9.5
6.215-6.218	74.8-75.2	1660 - 1710	10.6-12.7
6.26775-6.26825	108-121.94	1718.8-1722.2	13.25-13.4
6.31175-6.31225	123 - 138	2200 - 2300	14.47-14.5
8.291-8.294	149.9-150.05	2310-2390	15.35-16.2
8.362-8.366	156.52475-156.52525	2483.5 - 2500	17.7-21.4
8.37625-8.38675	156.7-156.9	2690 - 2900	22.01-23.12
8.41425-8.41475	162.0125-167.17	3260 - 3267	23.6-24.0
12.29-12.293	167.72-173.2	3332 - 3339	31.2-31.8
12.51975-12.52025	240 - 285	3345.8 - 3358	36.43-36.5
12.57675-12.57725	322-335.4	3600 - 4400	([2])
13.36-13.41	--	--	--

For 15.407(b) Requirement:

For transmitters operating in the 5.725-5.85 GHz band: All emissions within the frequency range from the band edge to 10 MHz above or below the band edge shall not exceed an e.i.r.p. of -17 dBm/MHz; for frequencies 10 MHz or greater above or below the band edge, emissions shall not exceed an e.i.r.p. of -27 dBm/MHz.

Refer to KDB 789033 D02v02r01 G)2)c), as specified in § 15.407(b), emissions above 1000 MHz that are outside of the restricted bands are subject to a maximum emission limit of -27 dBm/MHz (or -17 dBm/MHz as specified in § 15.407(b)(4)). However, an out-of-band emission that complies with

both the peak and average limits of § 15.209 is not required to satisfy the -27 dBm/MHz or -17 dBm/MHz maximum emission limit.

All out of band emissions appearing in a restricted band as specified in Section 15.205 of the Title 47CFR must not exceed the limits shown in Table per Section 15.209.

FCC Part 15 Subpart C Paragraph 15.209		
Frequency (MHz)	Field Strength (μV/m)	Measured Distance (m)
0.009 - 0.490	2400/F (kHz)	300
0.490 - 1.705	24000/F (kHz)	30
1.705 - 30	30	30
30 - 88	100	3
88 - 216	150	3
216 - 960	200	3
Above 960	500	3

6.8.2.Test Procedure Used

KDB 789033 D02v02r01- Section G

6.8.3.Test Setting

Peak Measurements above 1GHz

1. Analyzer center frequency was set to the frequency of the radiated spurious emission of interest
2. RBW = 1MHz
3. VBW = 3MHz
4. Detector = Peak
5. Sweep time = Auto couple
6. Trace mode = Max hold
7. Trace was allowed to stabilize

Average Measurements above 1GHz (Method VB)

1. Analyzer center frequency was set to the frequency of the radiated spurious emission of interest
2. RBW = 1MHz
3. VBW; if the EUT is configured to transmit with duty cycle ≥ 98%, set VBW = 10Hz
4. If the EUT duty cycle is < 98%, set VBW ≥ 1/T. T is the minimum transmission duration
5. Detector = Peak
6. Sweep time = Auto
7. Trace mode = Max hold
8. Trace was allowed to stabilize

6.8.4.Test Setup

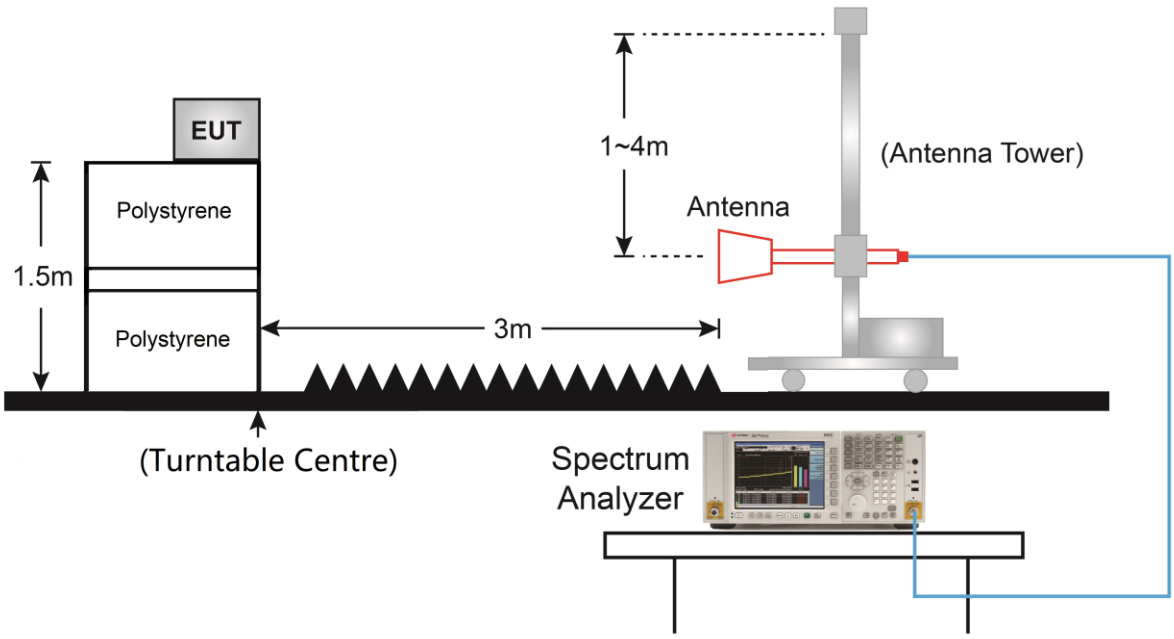

6.8.5.Test Result

Site: SIP-AC3	Time: 2021/08/15 - 16:22
Limit: FCC_Part15.209 RE(3m)	Engineer: Yien Qian
Probe: SIP-AC3_HF907_102861_1-18GHz	Polarity: Horizontal
EUT: Wireless Receiver	Power: AC 120V/60Hz
Test Mode: Transmit by Full Band at Channel 5729MHz	

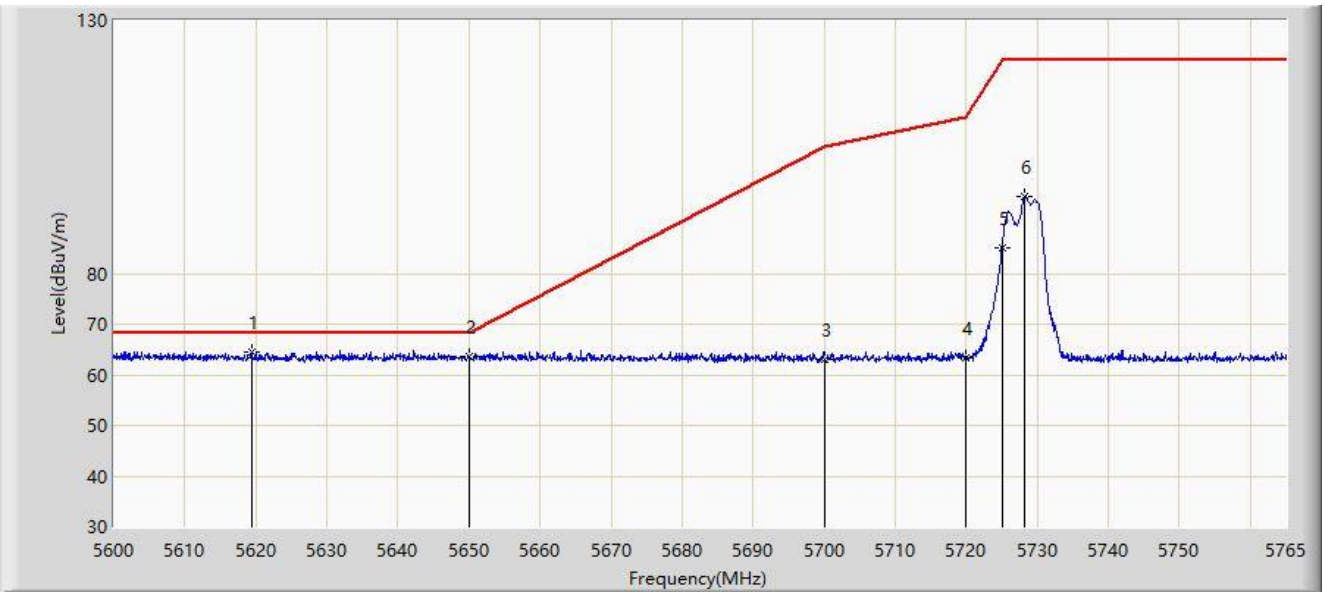

No	Flag	Mark	Frequency (MHz)	Measure Level (dBuV/m)	Reading Level (dBuV)	Margin (dB)	Limit (dBuV/m)	Factor (dB/m)	Type
1		*	5619.388	64.459	72.684	-3.741	68.200	-8.224	PK
2			5650.000	63.523	71.732	-4.677	68.200	-8.209	PK
3			5700.000	63.099	71.512	-42.101	105.200	-8.414	PK
4			5720.000	63.458	71.795	-47.342	110.800	-8.336	PK
5			5725.000	85.017	93.329	-37.183	122.200	-8.312	PK
6			5728.205	95.212	103.536	N/A	N/A	-8.324	PK

Note: Measure Level (dBμV/m) = Reading Level (dBμV) + Factor (dB)

Factor (dB) = Cable Loss (dB) + Antenna Factor (dB/m) - Pre_Amplifier Gain (dB).

Site: SIP-AC3	Time: 2021/08/15 - 17:08
Limit: FCC_Part15.209 RE(3m)	Engineer: Yien Qian
Probe: SIP-AC3_HF907_102861_1-18GHz	Polarity: Vertical
EUT: Wireless Receiver	Power: AC 120V/60Hz
Test Mode: Transmit by Full Band at Channel 5729MHz	

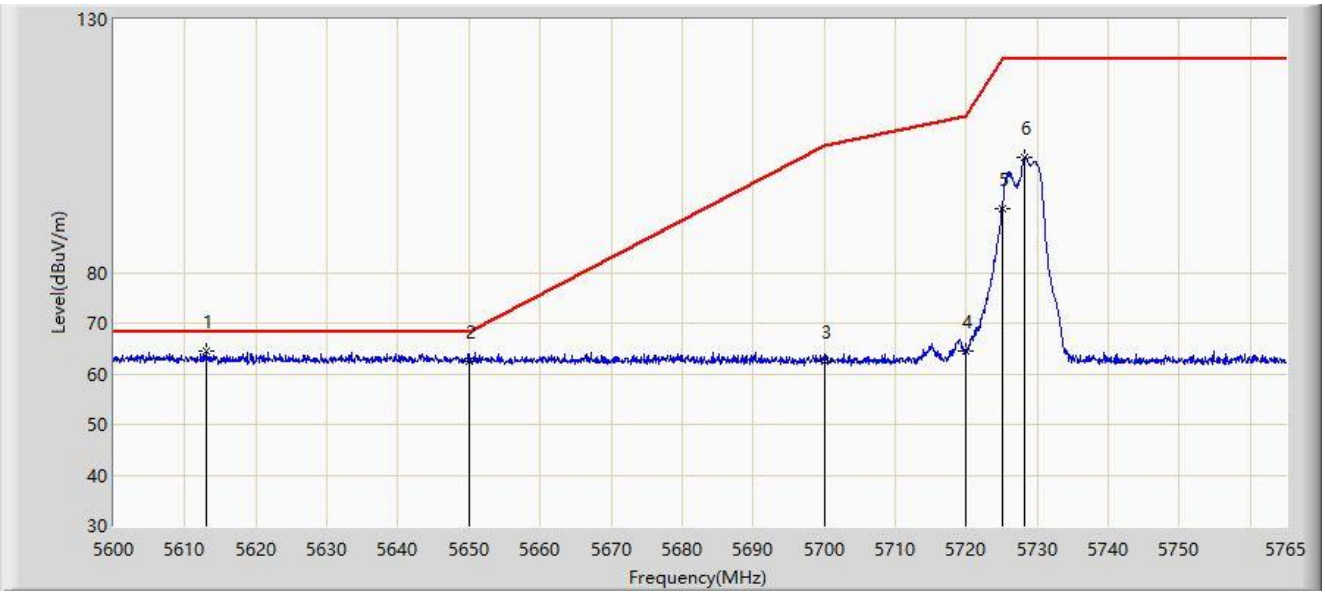

No	Flag	Mark	Frequency (MHz)	Measure Level (dBuV/m)	Reading Level (dBuV)	Margin (dB)	Limit (dBuV/m)	Factor (dB/m)	Type
1		*	5612.953	64.538	72.729	-3.662	68.200	-8.190	PK
2			5650.000	62.368	70.577	-5.832	68.200	-8.209	PK
3			5700.000	62.375	70.788	-42.825	105.200	-8.414	PK
4			5720.000	64.481	72.818	-46.319	110.800	-8.336	PK
5			5725.000	92.565	100.877	-29.635	122.200	-8.312	PK
6			5728.288	102.842	111.167	N/A	N/A	-8.324	PK

Note: Measure Level (dBμV/m) = Reading Level (dBμV) + Factor (dB)

Factor (dB) = Cable Loss (dB) + Antenna Factor (dB/m) - Pre_Amplifier Gain (dB).

Site: SIP-AC3	Time: 2021/08/15 - 17:13
Limit: FCC_Part15.209 RE(3m)	Engineer: Yien Qian
Probe: SIP-AC3_HF907_102861_1-18GHz	Polarity: Horizontal
EUT: Wireless Receiver	Power: AC 120V/60Hz
Test Mode: Transmit by Full Band at Channel 5846MHz	

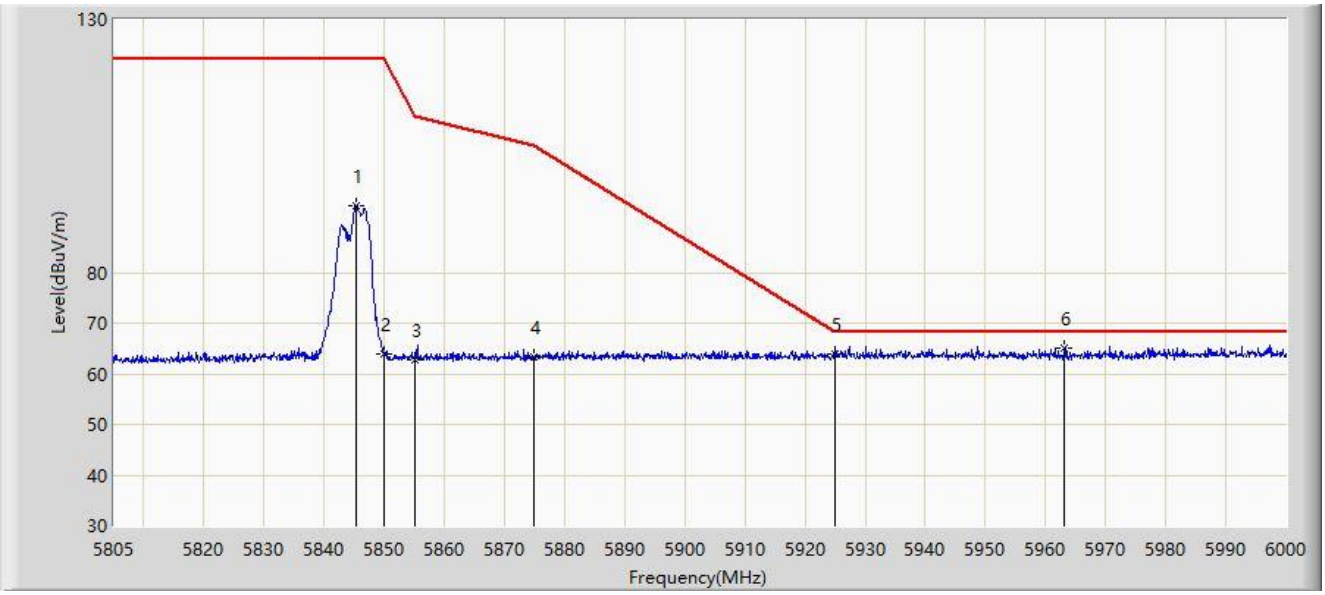

No	Flag	Mark	Frequency (MHz)	Measure Level (dBuV/m)	Reading Level (dBuV)	Margin (dB)	Limit (dBuV/m)	Factor (dB/m)	Type
1			5845.268	93.243	101.332	N/A	N/A	-8.089	PK
2			5850.000	63.772	71.876	-58.428	122.200	-8.104	PK
3			5855.000	62.829	70.949	-47.971	110.800	-8.119	PK
4			5875.000	63.296	71.289	-41.904	105.200	-7.993	PK
5			5925.000	63.808	71.614	-4.392	68.200	-7.805	PK
6		*	5963.145	65.021	72.891	-3.179	68.200	-7.869	PK

Note: Measure Level (dBμV/m) = Reading Level (dBμV) + Factor (dB)

Factor (dB) = Cable Loss (dB) + Antenna Factor (dB/m) - Pre_Amplifier Gain (dB).

Site: SIP-AC3	Time: 2021/08/15 - 17:19
Limit: FCC_Part15.209 RE(3m)	Engineer: Yien Qian
Probe: SIP-AC3_HF907_102861_1-18GHz	Polarity: Vertical
EUT: Wireless Receiver	Power: AC 120V/60Hz
Test Mode: Transmit by Full Band at Channel 5846MHz	

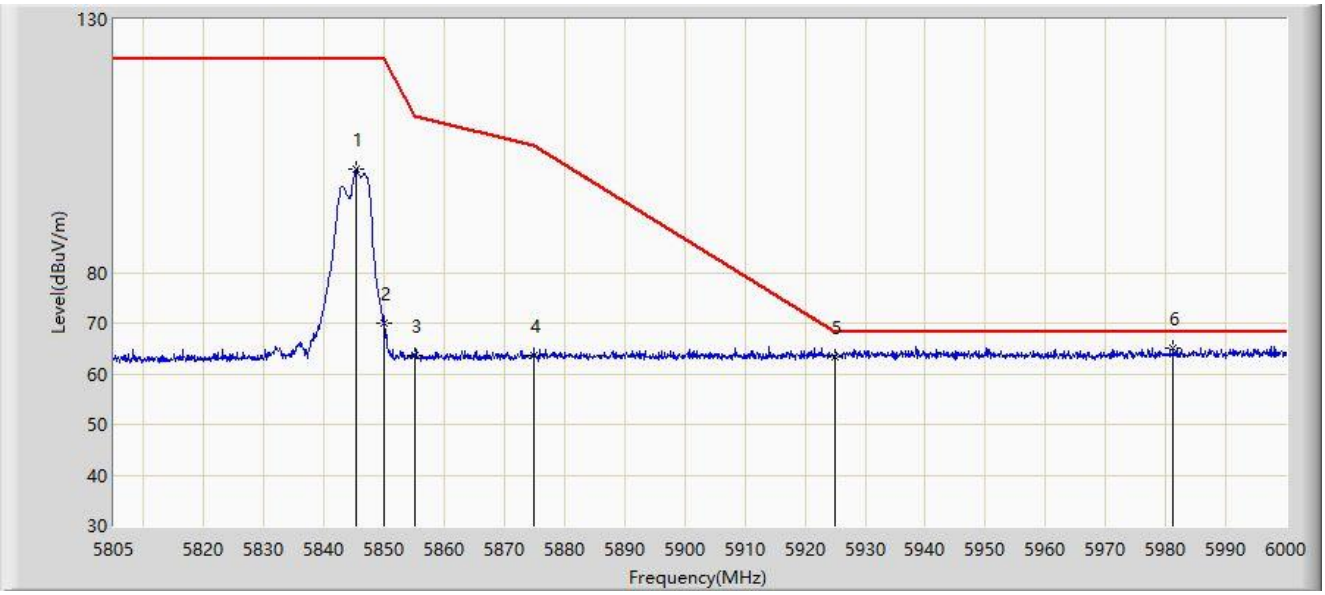

No	Flag	Mark	Frequency (MHz)	Measure Level (dBuV/m)	Reading Level (dBuV)	Margin (dB)	Limit (dBuV/m)	Factor (dB/m)	Type
1			5845.268	100.493	108.582	N/A	N/A	-8.089	PK
2			5850.000	69.928	78.032	-52.272	122.200	-8.104	PK
3			5855.000	63.595	71.715	-47.205	110.800	-8.119	PK
4			5875.000	63.482	71.475	-41.718	105.200	-7.993	PK
5			5925.000	63.366	71.172	-4.834	68.200	-7.805	PK
6		*	5981.280	65.168	72.897	-3.032	68.200	-7.729	PK

Note: Measure Level (dBμV/m) = Reading Level (dBμV) + Factor (dB)

Factor (dB) = Cable Loss (dB) + Antenna Factor (dB/m) - Pre_Amplifier Gain (dB).

Site: SIP-AC3	Time: 2021/08/15 - 17:25
Limit: FCC_Part15.209 RE(3m)	Engineer: Yien Qian
Probe: SIP-AC3_HF907_102861_1-18GHz	Polarity: Horizontal
EUT: Wireless Receiver	Power: AC 120V/60Hz
Test Mode: Transmit by Half Band at Channel 5729MHz	

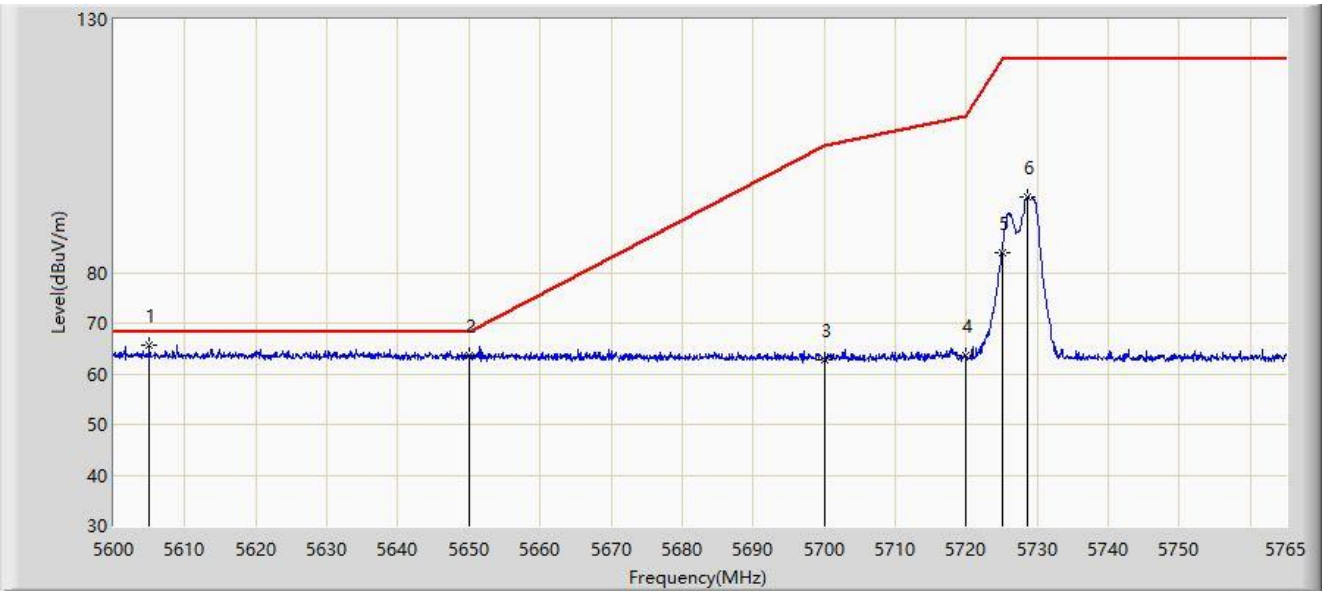

No	Flag	Mark	Frequency (MHz)	Measure Level (dBuV/m)	Reading Level (dBuV)	Margin (dB)	Limit (dBuV/m)	Factor (dB/m)	Type
1		*	5605.033	65.615	73.787	-2.585	68.200	-8.171	PK
2			5650.000	63.598	71.807	-4.602	68.200	-8.209	PK
3			5700.000	62.722	71.135	-42.478	105.200	-8.414	PK
4			5720.000	63.482	71.819	-47.318	110.800	-8.336	PK
5			5725.000	83.918	92.230	-38.282	122.200	-8.312	PK
6			5728.700	94.999	103.327	N/A	N/A	-8.328	PK

Note: Measure Level (dBμV/m) = Reading Level (dBμV) + Factor (dB)

Factor (dB) = Cable Loss (dB) + Antenna Factor (dB/m) - Pre_Amplifier Gain (dB).

Site: SIP-AC3	Time: 2021/08/15 - 17:36
Limit: FCC_Part15.209 RE(3m)	Engineer: Yien Qian
Probe: SIP-AC3_HF907_102861_1-18GHz	Polarity: Vertical
EUT: Wireless Receiver	Power: AC 120V/60Hz
Test Mode: Transmit by Half Band at Channel 5729MHz	

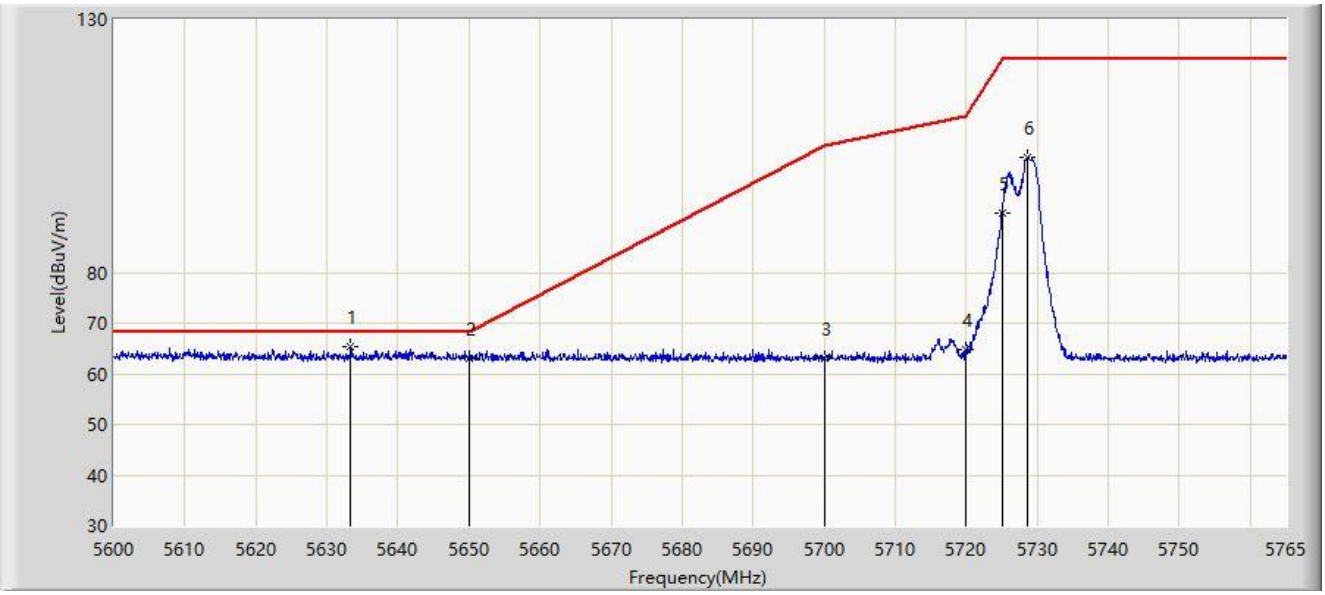

No	Flag	Mark	Frequency (MHz)	Measure Level (dBuV/m)	Reading Level (dBuV)	Margin (dB)	Limit (dBuV/m)	Factor (dB/m)	Type
1		*	5633.330	65.414	73.614	-2.786	68.200	-8.200	PK
2			5650.000	63.028	71.237	-5.172	68.200	-8.209	PK
3			5700.000	62.988	71.401	-42.212	105.200	-8.414	PK
4			5720.000	64.898	73.235	-45.902	110.800	-8.336	PK
5			5725.000	91.866	100.178	-30.334	122.200	-8.312	PK
6			5728.700	102.832	111.160	N/A	N/A	-8.328	PK

Note: Measure Level (dBμV/m) = Reading Level (dBμV) + Factor (dB)

Factor (dB) = Cable Loss (dB) + Antenna Factor (dB/m) - Pre_Amplifier Gain (dB).

Site: SIP-AC3	Time: 2021/08/15 - 17:40
Limit: FCC_Part15.209 RE(3m)	Engineer: Yien Qian
Probe: SIP-AC3_HF907_102861_1-18GHz	Polarity: Horizontal
EUT: Wireless Receiver	Power: AC 120V/60Hz
Test Mode: Transmit by Half Band at Channel 5846MHz	

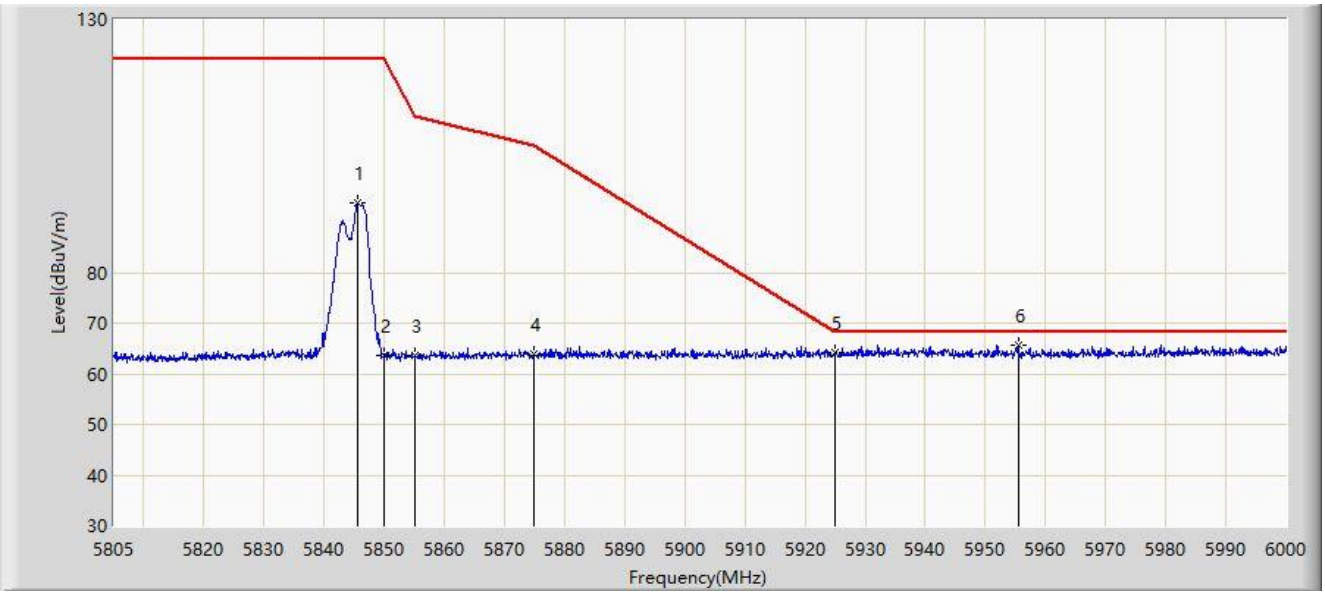

No	Flag	Mark	Frequency (MHz)	Measure Level (dBuV/m)	Reading Level (dBuV)	Margin (dB)	Limit (dBuV/m)	Factor (dB/m)	Type
1			5845.560	93.664	101.754	N/A	N/A	-8.089	PK
2			5850.000	63.511	71.615	-58.689	122.200	-8.104	PK
3			5855.000	63.623	71.743	-47.177	110.800	-8.119	PK
4			5875.000	63.868	71.861	-41.332	105.200	-7.993	PK
5			5925.000	64.175	71.981	-4.025	68.200	-7.805	PK
6		*	5955.442	65.587	73.399	-2.613	68.200	-7.812	PK

Note: Measure Level (dBμV/m) = Reading Level (dBμV) + Factor (dB)

Factor (dB) = Cable Loss (dB) + Antenna Factor (dB/m) - Pre_Amplifier Gain (dB).

Site: SIP-AC3	Time: 2021/08/15 - 17:50
Limit: FCC_Part15.209 RE(3m)	Engineer: Yien Qian
Probe: SIP-AC3_HF907_102861_1-18GHz	Polarity: Vertical
EUT: Wireless Receiver	Power: AC 120V/60Hz
Test Mode: Transmit by Half Band at Channel 5846MHz	

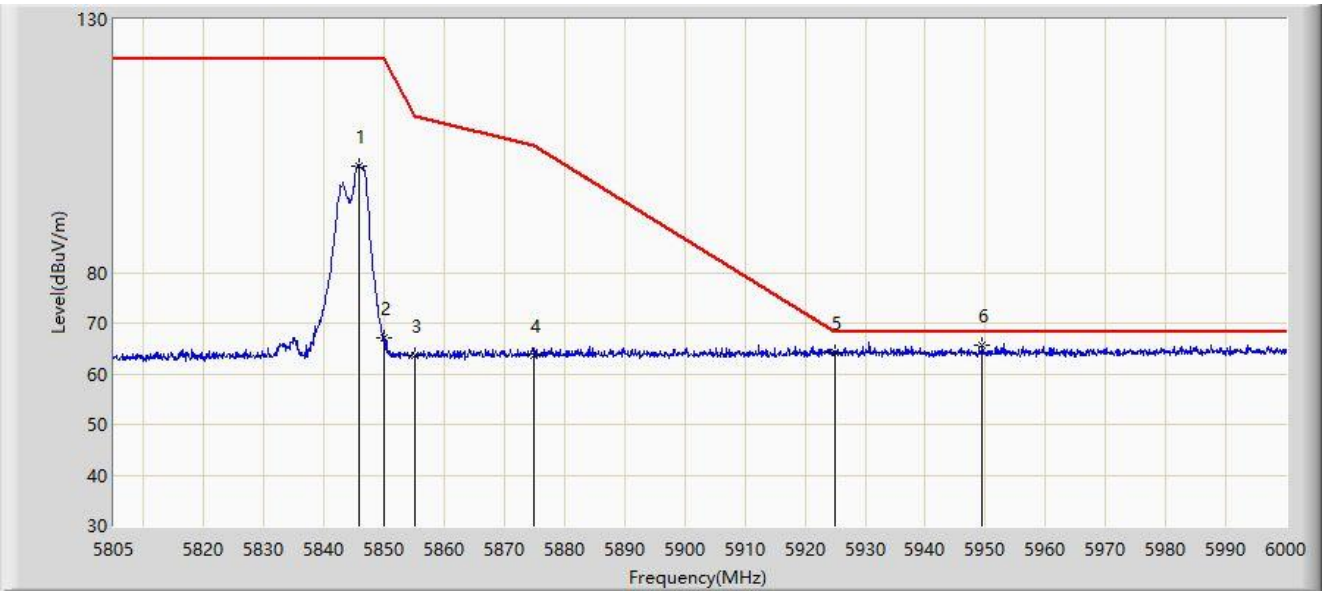

No	Flag	Mark	Frequency (MHz)	Measure Level (dBuV/m)	Reading Level (dBuV)	Margin (dB)	Limit (dBuV/m)	Factor (dB/m)	Type
1			5845.853	101.052	109.143	N/A	N/A	-8.091	PK
2			5850.000	67.000	75.104	-55.200	122.200	-8.104	PK
3			5855.000	63.718	71.838	-47.082	110.800	-8.119	PK
4			5875.000	63.533	71.526	-41.667	105.200	-7.993	PK
5			5925.000	64.290	72.096	-3.910	68.200	-7.805	PK
6		*	5949.495	65.682	73.450	-2.518	68.200	-7.768	PK

Note: Measure Level (dBμV/m) = Reading Level (dBμV) + Factor (dB)

Factor (dB) = Cable Loss (dB) + Antenna Factor (dB/m) - Pre_Amplifier Gain (dB).

6.9. AC Conducted Emissions Measurement

6.9.1.Test Limit

FCC Part 15 Subpart C Paragraph 15.207 Limits		
Frequency (MHz)	QP (dBuV)	AV (dBuV)
0.15 - 0.50	66 - 56	56 - 46
0.50 - 5.0	56	46
5.0 - 30	60	50
Note 1: The lower limit shall apply at the transition frequencies. Note 2: The limit decreases linearly with the logarithm of the frequency in the range 0.15MHz to 0.5MHz.		

6.9.2.Test Setup

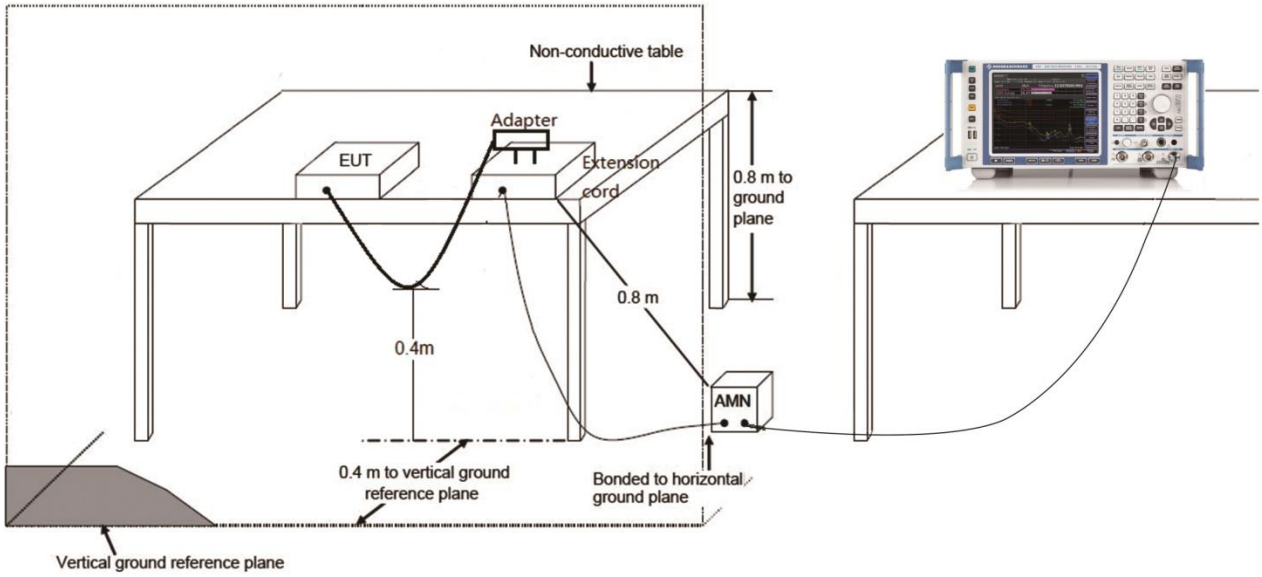

6.9.3.Test Result

Site: SIP-SR2	Time: 2021/08/10 - 16:00
Limit: FCC_Part15.207_CE_AC Power	Engineer: Rupert Wang
Probe: SIP-SR2-ENV216_101684_C	Polarity: Line
EUT: Wireless Receiver	Power: AC 120V/60Hz
Test Mode: Transmit	

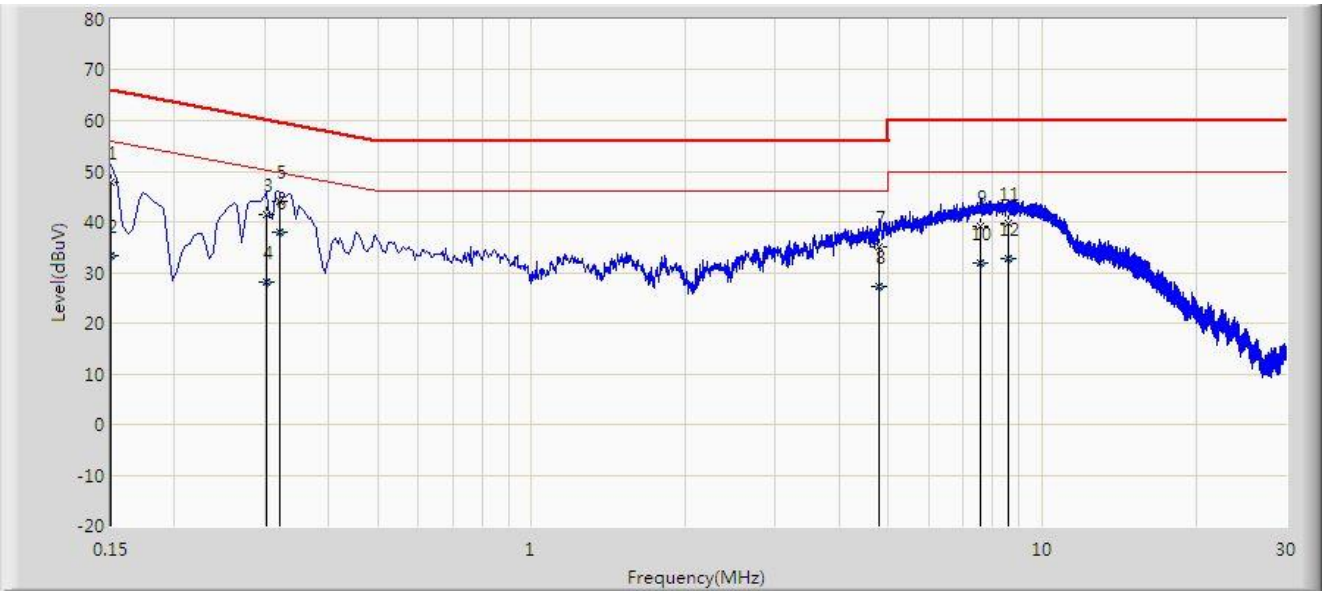

No	Flag	Mark	Frequency (MHz)	Measure Level (dBuV)	Reading Level (dBuV)	Margin (dB)	Limit (dBuV)	Factor (dB)	Type
1			0.150	47.778	38.128	-18.222	66.000	9.650	QP
2			0.150	33.440	23.790	-22.560	56.000	9.650	AV
3			0.302	41.357	31.646	-18.831	60.188	9.711	QP
4			0.302	28.021	18.310	-22.167	50.188	9.711	AV
5			0.322	43.932	34.214	-15.723	59.655	9.718	QP
6		*	0.322	37.951	28.233	-11.704	49.655	9.718	AV
7			4.806	35.052	25.223	-20.948	56.000	9.828	QP
8			4.806	27.301	17.473	-18.699	46.000	9.828	AV
9			7.550	39.252	29.306	-20.748	60.000	9.945	QP
10			7.550	32.023	22.077	-17.977	50.000	9.945	AV
11			8.562	39.780	29.784	-20.220	60.000	9.996	QP
12			8.562	32.815	22.819	-17.185	50.000	9.996	AV

Note: Measure Level (dBμV) = Reading Level (dBμV) + Factor (dB)

Factor (dB) = Cable Loss (dB) + LISN Factor (dB).

Site: SIP-SR2	Time: 2021/08/10 - 16:04
Limit: FCC_Part15.207_CE_AC Power	Engineer: Rupert Wang
Probe: SIP-SR2-ENV216_101684_C	Polarity: Neutral
EUT: Wireless Receiver	Power: AC 120V/60Hz
Test Mode: Transmit	

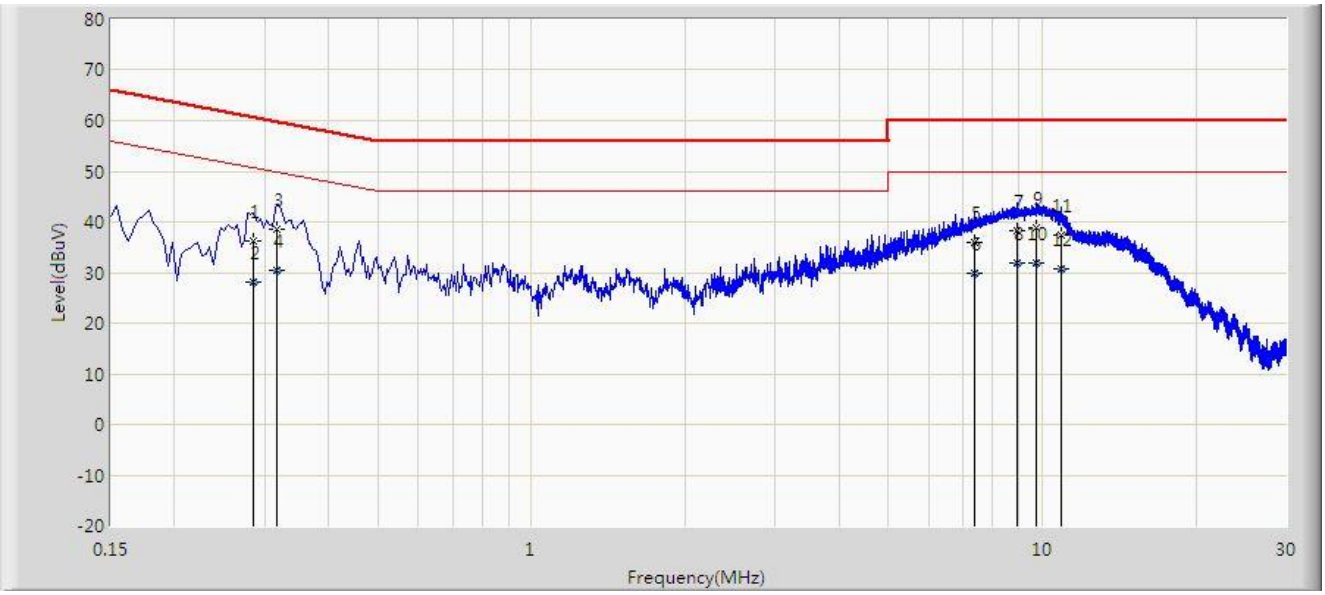

No	Flag	Mark	Frequency (MHz)	Measure Level (dBuV)	Reading Level (dBuV)	Margin (dB)	Limit (dBuV)	Factor (dB)	Type
1			0.286	36.253	26.558	-24.386	60.640	9.696	QP
2			0.286	28.253	18.558	-22.387	50.640	9.696	AV
3			0.318	38.522	28.815	-21.237	59.759	9.706	QP
4			0.318	30.332	20.626	-19.427	49.759	9.706	AV
5			7.358	35.833	25.898	-24.167	60.000	9.935	QP
6			7.358	29.999	20.064	-20.001	50.000	9.935	AV
7			8.902	38.283	28.278	-21.717	60.000	10.006	QP
8			8.902	31.945	21.940	-18.055	50.000	10.006	AV
9			9.738	38.721	28.684	-21.279	60.000	10.036	QP
10		*	9.738	31.988	21.951	-18.012	50.000	10.036	AV
11			10.866	37.436	27.366	-22.564	60.000	10.070	QP
12			10.866	30.702	20.632	-19.298	50.000	10.070	AV

Note: Measure Level (dBμV) = Reading Level (dBμV) + Factor (dB)

Factor (dB) = Cable Loss (dB) + LISN Factor (dB).

7. Conclusion

The data collected relate only the item(s) tested and show that the device is compliance with Part 15E of the FCC rules.

The End

Appendix A - Test Setup Photograph

Refer to “2107RSU058-UT” file.

Appendix B - EUT Photograph

Refer to “2107RSU058-UE” file.