SHURE®

PSM®1000

Personal Monitor Wireless System

Guide de l’utilisation du système de retour personnel

Personal Monitor System Bedienungsanleitung

Guía del usuario del sistema de monitoreo personal

Guida all’uso del sistema di monitoraggio personale

Manual do Usuário do Sistema de Monitoração Pessoal

Система личного монитора беспроволочная

© 2010 Shure Incorporated
Printed in U.S.A.
27A14811 (Rev. 1)

IMPORTANT SAFETY INSTRUCTIONS

1. READ these instructions.
2. KEEP these instructions.
3. HEED all warnings.
4. FOLLOW all instructions.
5. DO NOT use this apparatus near water.
6. CLEAN ONLY with dry cloth.
7. DO NOT block any ventilation openings. Install in accordance with the manufacturer's instructions.
8. DO NOT install near any heat sources such as radiators, heat registers, stoves, or other apparatus (including amplifiers) that produce heat.
9. DO NOT defeat the safety purpose of the polarized or grounding-type plug. A polarized plug has two blades with one wider than the other. A grounding type plug has two blades and a third grounding prong. The wider blade or the third prong are provided for your safety. If the provided plug does not fit into your outlet, consult an electrician for replacement of the obsolete outlet.
10. PROTECT the power cord from being walked on or pinched, particularly at plugs, convenience receptacles, and the point where they exit from the apparatus.
11. ONLY USE attachments/accessories specified by the manufacturer.
12.
USE only with a cart, stand, tripod, bracket, or table specified by the manufacturer, or sold with the apparatus. When a cart is used, use caution when moving the cart/apparatus combination to avoid injury from tip-over.
13. UNPLUG this apparatus during lightning storms or when unused for long periods of time.
14. REFER all servicing to qualified service personnel. Servicing is required when the apparatus has been damaged in any way, such as power supply cord or plug is damaged, liquid has been spilled or objects have fallen into the apparatus, the apparatus has been exposed to rain or moisture, does not operate normally, or has been dropped.
15. DO NOT expose the apparatus to dripping and splashing. DO NOT put objects filled with liquids, such as vases, on the apparatus.
16. The MAINS plug or an appliance coupler shall remain readily operable.
17. The airborne noise of the Apparatus does not exceed 70dB (A).
18. Apparatus with CLASS I construction shall be connected to a MAINS socket outlet with a protective earthing connection.
19. To reduce the risk of fire or electric shock, do not expose this apparatus to rain or moisture.
20. Do not attempt to modify this product. Doing so could result in personal injury and/or product failure.

This symbol indicates that dangerous voltage constituting a risk of electric shock is present within this unit.

This symbol indicates that there are important operating and maintenance instructions in the literature accompanying this unit.

⚠ WARNING!

LISTENING TO AUDIO AT EXCESSIVE VOLUMES CAN CAUSE PERMANENT HEARING DAMAGE.
USE AS LOW A VOLUME AS POSSIBLE.

Over exposure to excessive sound levels can damage your ears resulting in permanent noise-induced hearing loss **(NIHL)**. Please use the following guidelines established by the Occupational Safety Health Administration **(OSHA)** on maximum time exposure to sound pressure levels before hearing damage occurs.

90 dB SPL at 8 hours	**95 dB SPL** at 4 hours	**100 dB SPL** at 2 hours	**105 dB SPL** at 1 hour
110 dB SPL at ½ hour	**115 dB SPL** at 15 minutes	**120 dB SPL** Avoid or damage may occur	

SAFETY PRECAUTIONS

The possible results of incorrect use are marked by one of the two symbols - "WARNING" AND "CAUTION" - depending on the imminence of the danger and the severity of the damage.

⚠ WARNING: Ignoring these warnings may cause severe injury or death as a result of incorrect operation.

⚠ CAUTION: Ignoring these cautions may cause moderate injury or property damage as a result of incorrect operation.

⚠ WARNING

- If water or other foreign objects enter the inside of the device, fire or electric shock may result.
- Do not attempt to modify this product. Doing so could result in personal injury and/or product failure.

WARNING: This product contains a chemical known to the State of California to cause cancer and birth defects or other reproductive harm

⚠ CAUTION

- Never disassemble or modify the device, as failures may result.
- Do not subject to extreme force and do not pull on the cable or failures may result.
- Keep the microphone dry and avoid exposure to extreme temperatures and humidity.

⚠ ADVERTENCIA

EL ESCUCHAR REPRODUCCIONES DE AUDIO A NIVELES EXCESIVOS DE VOLUMEN PUEDE CAUSAR DAÑOS PERMANENTES AL OIDO. USE EL VOLUMEN MAS BAJO POSIBLE.

La exposición prolongada a niveles sonoros excesivamente intensos puede dañar los oídos y causar una pérdida permanente del oído causada por ruidos. Respete los lineamientos dados a continuación, los cuales fueron establecidos por la Administración de Salud y Seguridad Ocupacional **(OSHA)** de los EE.UU. e indican el tiempo máximo que puede escucharse un nivel determinado de presión sonora (SPL) antes de producirse daños al oído.

90 dB SPL por 8 horas	**95 dB SPL** por 4 horas	**100 dB SPL** por 2 horas	**105 dB SPL** por 1 hora
110 dB SPL por 1/2 hora	**115 dB SPL** por 15 minutos	**120 dB SPL** Evítese por completo, puesto que puede causar daños inmediatos	

PRECAUCIONES DE SEGURIDAD

Los posibles resultados del uso incorrecto de este producto se denotan por medio de uno de dos símbolos - "ADVERTENCIA" y "PRECAUCION" - según la inminencia del peligro y el grado de severidad de los daños.

⚠ ADVERTENCIA: Si se pasan por alto estas advertencias se podría causar lesiones graves o mortales como resultado del uso incorrecto.

⚠ PRECAUCION: Si se pasan por alto estas precauciones se podría causar lesiones moderadas y daños a la propiedad como resultado del uso incorrecto.

⚠ ADVERTENCIA

- Si el agua u otros objetos extraños penetran el dispositivo, se podría causar un incendio o sacudidas eléctricas.
- No intente modificar este producto. Hacerlo podría causar lesiones personales y/o la falla del producto.

⚠ PRECAUCION

- Nunca desarme ni modifique el dispositivo, ya que esto podría causar fallas.
- No someta el aparato a fuerzas extremas ni tire de su cable, ya que esto podría causar fallas.
- Mantenga el micrófono seco y evite exponer el aparato a niveles extremos de temperatura y humedad.

⚠ ACHTUNG!

MÖGLICHST GERINGE LAUTSTÄRKEPEGEL VERWENDEN.

Längerfristiges Hören bei übermäßigen Schallpegeln kann zu Hörschäden und zu permanentem, durch Lärm verursachten Gehörverlust führen. Bitte orientieren Sie sich an den folgenden von der Occupational Safety Health Administration **(OSHA; US-Arbeitsschutzbehörde)** erstellten Richtlinien für die maximale zeitliche Belastung durch Schalldruckpegel, bevor es zu Hörschäden kommt.

bei 90 dB Schalldruckpegel max. 8 Stunden	**bei 95 dB Schalldruckpegel** max. 4 Stunden	**bei 100 dB Schalldruckpegel** max. 2 Stunden	**bei 105 dB Schalldruckpegel** max. 1 Stunde
bei 110 dB Schalldruckpegel max. ½ Stunde	**bei 115 dB Schalldruckpegel** max. 15 Minuten	**120 dB Schalldruckpegel** vermeiden; ansonsten können Schäden auftreten	

SICHERHEITSVORKEHRUNGEN

Die möglichen Folgen des fehlerhaften Gebrauchs, die durch eines der beiden Symbole - „ACHTUNG" und „VORSICHT" - markiert sind, hängen von der Unmittelbarkeit der bevorstehenden Gefahr und des Schweregrads der Beschädigung ab.

⚠ ACHTUNG: Die Nichtbeachtung dieser Warnhinweise kann schwere oder tödliche Verletzungen infolge des fehlerhaften Gebrauchs verursachen.

⚠ VORSICHT: Die Nichtbeachtung dieser Vorsichtshinweise kann mittelschwere Verletzungen oder Sachschäden infolge des fehlerhaften Gebrauchs verursachen.

⚠ ACHTUNG

- Falls Wasser oder andere Fremdstoffe/-körper in das Gerät gelangen, kann es zu Bränden oder Stromschlägen kommen.
- Nicht versuchen, dieses Produkt zu modifizieren. Ansonsten könnte es zu Verletzungen und/oder zum Produktausfall kommen.

⚠ VORSICHT

- Das Gerät nie auseinanderbauen oder modifizieren, da dies zu Ausfällen führen kann.
- Keinen extremen Kräften aussetzen und nicht am Kabel ziehen, da dies zu Ausfällen führen kann.
- Das Mikrofon trocken halten und keinen extremen Temperaturen oder extremer Luftfeuchtigkeit aussetzen.

⚠ AVERTISSEMENT !

L'ÉCOUTE AUDIO À UN VOLUME SONORE EXCESSIF PEUT CAUSER DES LÉSIONS AUDITIVES PERMANENTES. RÉGLER LE VOLUME LE PLUS BAS POSSIBLE.

Une surexposition à des volumes sonores excessifs peut causer des lésions aux oreilles entraînant une perte auditive permanente due au bruit. Se conformer aux directives ci-dessous, établies par l'Occupational Safety Health Administration **(OSHA)** pour les limites de durée d'exposition aux pressions acoustiques (SPL) avant de risquer des lésions auditives.

SPL de 90 dB pendant 8 heures	**SPL de 95 dB** pendant 4 heures	**SPL de 100 dB** pendant 2 heures	**SPL de 105 dB** pendant 1 heure
SPL de 110 dB pendant 1/2 heure	**SPL de 115 dB** pendant 15 minutes	**SPL de 120 dB** À éviter : risque de lésions auditives	

PRÉCAUTIONS DE SÉCURITÉ

Les résultats possibles d'une utilisation incorrecte sont signalés par l'un des deux symboles - AVERTISSEMENT et ATTENTION - selon l'imminence du danger et la sévérité des dommages.

⚠ AVERTISSEMENT : L'ignorance de ces avertissements peut causer des blessures graves ou la mort suite à une utilisation incorrecte.

⚠ ATTENTION: L'ignorance de ces mises en garde peut causer des blessures modérées ou des dégâts matériels suite à une utilisation incorrecte.

⚠ AVERTISSEMENT

- Si de l'eau ou autres matériaux étrangers pénètrent dans l'appareil, il y a risque d'incendie ou de choc électrique.
- Ne pas essayer de modifier ce produit. Une telle opération est susceptible d'entraîner des blessures ou la défaillance du produit.

⚠ ATTENTION

- Ne jamais désassembler ou modifier cet appareil sous peine de provoquer des défaillances.
- Ne pas soumettre le câble à des forces extrêmes et ne pas tirer dessus sous peine de provoquer des défaillances.
- Maintenir le microphone sec et éviter de l'exposer à des températures extrêmes et à l'humidité.

⚠ AVVERTENZA

L'ASCOLTO A VOLUME ECCESSIVAMENTE ELEVATO PUÒ DANNEGGIARE L'UDITO IN MODO PERMANENTE. MANTENETE IL VOLUME AL PIÙ BASSO LIVELLO POSSIBILE.

La sovraesposizione a livelli sonori eccessivi può danneggiare l'udito provocando una perdita di udito permanente causata dal rumore. Si consiglia di attenersi alle seguenti direttive stabilite dalla **OSHA** (Occupational Safety Health Administration) sul tempo massimo di esposizione a vari livelli di pressione sonora (SPL), oltre il quale si rischia di causare lesioni all'apparato uditivo.

90 dB di SPL per 8 ore	**95 dB di SPL** per 4 ore	**100 dB SPL** per 2 ore	**105 dB di SPL** per 1 ora
110 dB di SPL per mezz'ora	**115 dB di SPL** per 15 minuti	**120 dB di SPL** Evitate l'esposizione per non rischiare di danneggiare l'udito	

PRECAUZIONI DI SICUREZZA

I possibili effetti di un uso errato sono contrassegnati da uno dei due simboli - “AVVERTIMENTO” E “ATTENZIONE” — a seconda dell'incombenza del pericolo e della gravità del danno.

⚠ AVVERTIMENTO: come conseguenza di un funzionamento errato, ignorare questi messaggi può comportare lesioni personali gravi o mortali.

⚠ ATTENZIONE: come conseguenza di un funzionamento errato, ignorare questi messaggi può comportare lesioni personali di media gravità o danni alla cose.

⚠ AVVERTIMENTO:

- L'eventuale introduzione di acqua o di altri corpi estranei nel dispositivo può dare luogo allo sviluppo di incendi o a folgorazione.
- Non tentate di modificare il prodotto. Tale operazione può causare infortuni e/o il guasto del prodotto stesso.

⚠ ATTENZIONE

- Per evitare di provocare possibili danni, non smontate nè modificate il dispositivo.
- Per evitare di provocare possibili danni, non applicate una forza estrema sul cavo e non tiratelo.
- Mantenete il prodotto asciutto e non esponetelo a temperature estreme ed all'umidità.

⚠ ATENÇÃO!

OUVIR O SOM COM VOLUME MUITO ALTO PODE CAUSAR DANOS PERMANENTES À AUDIÇÃO. USE O VOLUME MAIS BAIXO POSSÍVEL.

A exposição a sons excessivamente altos pode danificar os ouvidos e resultar em perda permanente da audição devido ao ruído. Siga as recomendações estipuladas pela Administração de Saúde e Segurança do Trabalho dos E.U.A. (U.S. Occupational Safety Health Administration-**OSHA**) sobre o máximo tempo de exposição a determinados níveis de pressão sonora (SPL) a fim de evitar danos à audição.

90 dB SPL por 8 horas	**95 dB SPL** por 4 horas	**100 dB SPL** por 2 horas	**105 dB SPL** por 1 hora
110 dB SPL por ½ hora	**115 dB SPL** por 15 minutos	**120 dB SPL** Evite ou poderá ocorrer dano	

MEDIDAS DE SEGURANÇA

Os possíveis resultados do uso incorreto são marcados por um de dois símbolos - “ATENÇÃO” e “CUIDADO” - dependendo da iminência do perigo e da severidade
do dano.

⚠ TENÇÃO: Não seguir esses avisos de atenção pode causar lesão grave ou morte em conseqüência da operação incorreta.

⚠ CUIDADO: Não seguir esses avisos de cuidado pode causar lesão moderada ou danos à propriedade em conseqüência da operação incorreta.

⚠ ATENÇÃO

- Incêndio ou choque elétrico pode ocorrer caso água ou objetos estranhos entrem no dispositivo
- Não tente modificar este produto. pois pode resultar em lesão pessoal e/ou falha do produto.

⚠ CUIDADO

- Não desmonte ou modifique o dispositivo uma vez que pode resultar em falhas.
- Não sujeite à força demasiada e não puxe o cabo pois pode resultar em falhas.
- Mantenha o microfone seco e evite expor a temperaturas extremas e umidade.

⚠ ВНИМАНИЕ:

ПРОСЛУШИВАНИЕ ЗВУКА ПРИ ЧРЕЗМЕРНО ВЫСОКОЙ ГРОМКОСТИ МОЖЕТ ПРИВЕСТИ К НЕОБРАТИМОМУ ПОВРЕЖДЕНИЮ СЛУХА.ИСПОЛЬЗУЙТЕ КАК МОЖНО БОЛЕЕ НИЗКУЮ ГРОМКОСТЬ.

Длительное воздействие звука чрезмерно высокого уровня может причинить вам вред, вызвав необратимую потерю слуха из-за шума. Во избежание потери слуха руководствуйтесь следующими правилами, установленными Управлением охраны труда **(OSHA)** в отношении максимального времени воздействия различных уровней звукового давления (УЗД).

УЗД 90 дБ 8 часов	**УЗД 95 дБ** 4 часа	**УЗД 100 дБ** 2 часа	**УЗД 105 дБ** 1 час
УЗД 110 дБ 1/2 часа	**УЗД 115 дБ** 15 минут	**УЗД 120 дБ** Недопустимо — ведет к повреждению слуха	

УКАЗАНИЯ ПО ТЕХНИКЕ БЕЗОПАСНОСТИ

Возможные результаты неправильного использования отмечены одним из двух знаков - «ВНИМАНИЕ» и «ОСТОРОЖНО» - в зависимости от неизбежности опасности и серьезности повреждений.

⚠ ВНИМАНИЕ: Игнорирование этих предупреждений может привести к серьезной травме или смерти в результате неправильной эксплуатации.

⚠ ОСТОРОЖНО: Игнорирование этих предупреждений может привести к незначительной травме или повреждению имущества в результате неправильной эксплуатации.

⚠ ВНИМАНИЕ

- Если в устройство попадет вода или иные посторонние предметы, это может привести к возгоранию или поражению электрическим током.
- Не пытайтесь модифицировать это изделие. Это может привести к личной травме и (или) поломке изделия.

⚠ ОСТОРОЖНО

- Ни в коем случае не разбирайте и не модифицируйте это устройство, поскольку это может привести к поломке.
- Не подвергайте сильным нагрузкам и не тяните за кабель - это может привести к поломке.
- Содержите микрофон сухим и не подвергайте его воздействию очень высоких или низких температур и влажности.

PSM1000

The PSM1000 Personal Monitor System from Shure brings personal monitoring to its most advanced level yet. The full-rack, dual-channel, networked transmitter is ideally suited for the demands of elite-level professional touring and installation applications, and the diversity bodypack receiver delivers pristine RF signal and audio quality. Networkability over Ethernet connection enables remote control of transmitter functions and comprehensive frequency coordination via Wireless Workbench software.

Features

Advanced Setup and Operation

- Visual display of scan plotting in a rich graphical environment
- Remote control of transmitter settings
  - RF mute enable/disable
  - RF output power adjustments
  - Aux/line level
  - Audio input level
  - Channel/device name edit
- Directly update firmware with WWB through software update

Touring-Grade Performance

- Full rack, dual channel transmitter in a rugged, professional chassis
- Twin-antenna diversity bodypack virtually eliminates drop-outs from interference
- Precision front-end RF filtering reduces RF interference for a cleaner, stronger RF signal, fewer dropouts, and less audible artifacts.
- CueMode allows monitoring of different stage mixes and storing of up to 20 separate channels on one bodypack for quick and easy reference.
- Internal power supply with IEC in/out ports enables easy power chaining in the rack
- Backwards compatibility with PSM900 receivers for simplified inventory management

Components

P10T: Rack mount Transmitter
P10R: Bodypack Receiver
Two 1/2 Wave Antennas
AA Batteries (2)
Two Antenna Cables
IEC Power Cable and IEC Extension Cable
Ethernet Network Cable
Wireless Workbench Software
Zippered Bag

Rack mount supplies
2 antenna hole plugs
4 rack mount screws with washers

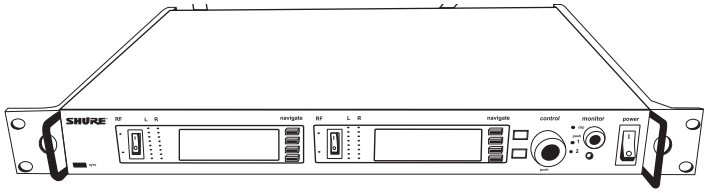

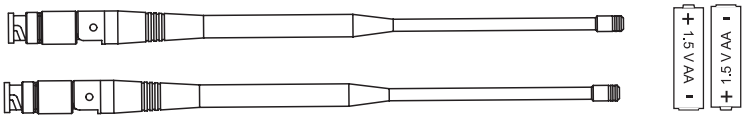

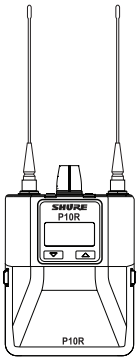

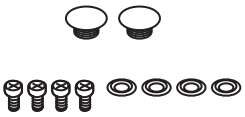

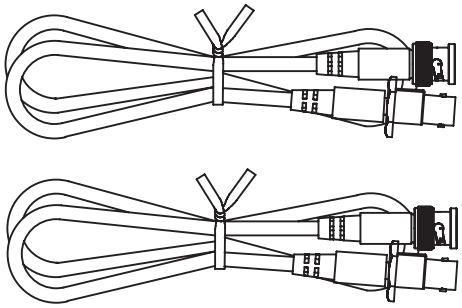

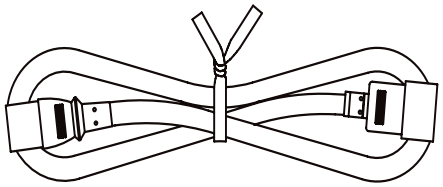

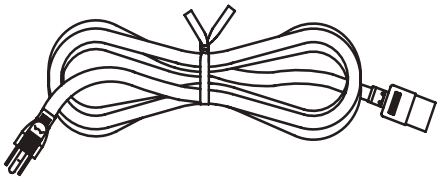

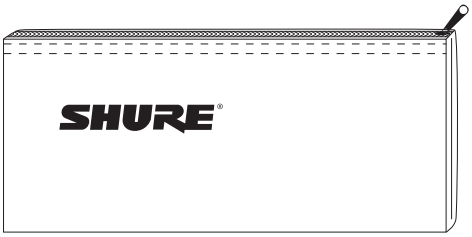

Quickstart Instructions

Rack mount Transmitter

1. Connect to a power outlet using the supplied power cable.
2. Attach the supplied antennas to the **ANTENNA OUT** BNC connectors.
3. Connect the audio source, such as the output of a mixer, to the audio inputs. You can use both input jacks or choose either one for a mono source.
4. Switch off RF and power on.
5. For mono (one input), access the AUDIO menu and select MONO.
6. Set the input sensitivity to match the source by selecting **AUDIO > INPUT** from the LCD configuration menu: **AUX–10dBV** or **LINE+4dBu.**
7. Adjust the audio source level so that, for the average input signal level, the top two yellow LEDs flicker and the lower LEDs are solid. If the red clip LED illuminates and a warning appears on the LCD, the inputs are overdriven. Decrease the level by entering the AUDIO menu and using the control wheel to change the input sensitivity to +4 dBu. If the signal level is too low, change the input sensitivity to –10 dBV.

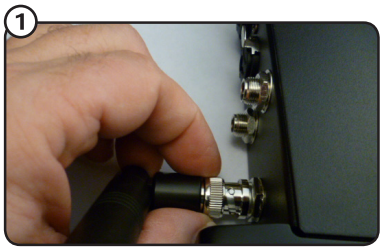

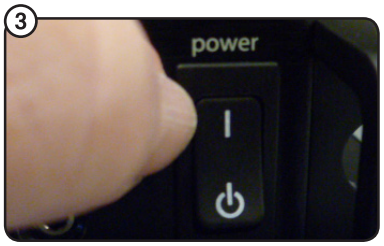

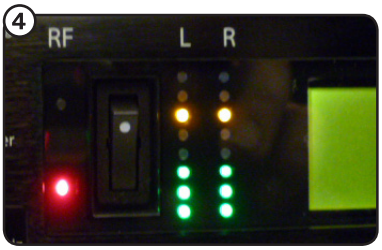

Pay no attention to these, they are placeholders...new illustrations to follow...

Bodypack

Open by pressing the latches on both sides and pulling. Insert the batteries or battery pack and attach antennas. Turn on using the volume knob. The battery light illuminates.

fix polarity of battery

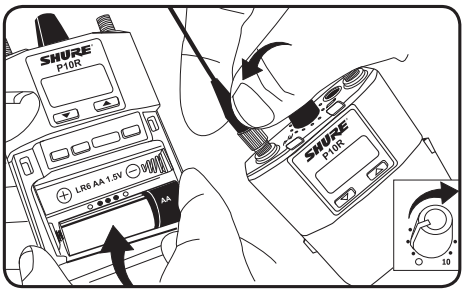

Home Screen on Bpack..

Scan and Sync

1. On the bodypack, press the **scan** button. The display flashes **SYNC NOW...**.
2. Align the IR windows on the bodypack and rack unit, and press the **sync** button on the transmitter. The IR window on the transmitter illuminates. Press the **sync** button again. The rack unit **level** LEDs flash, and it displays **SYNC SUCCESS**.
3. Turn the RF switch on. The blue RF LED illuminates on the bodypack to indicate that it is detecting the transmitter. The bodypack also displays the RF signal strength (**RF**).
4. IMPORTANT: Turn bodypack volume down before plugging in earphones.
5. Insert the earphones and slowly turn up the volume.

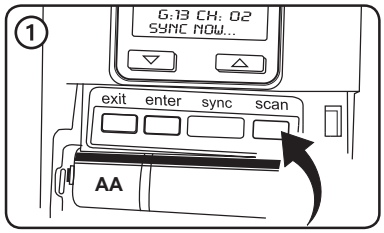

3

new illustration to follow

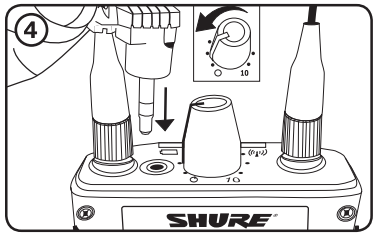

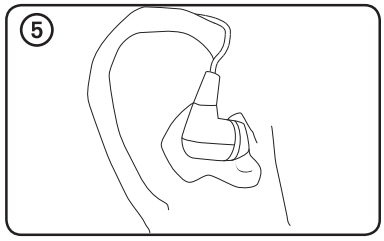

P10T Rack Mount Transmitter

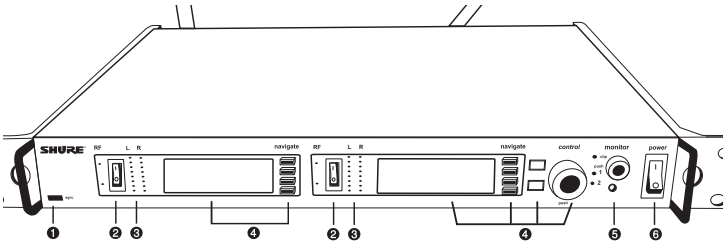

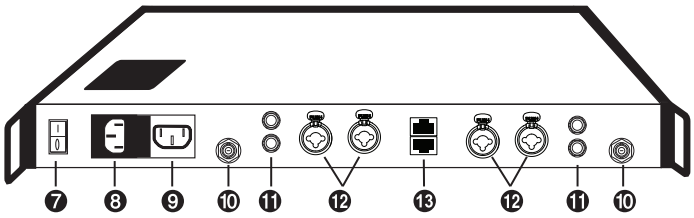

Front Panel Controls

① **Sync Window** Align bodypack IR window with sync window on TX.

② **RF Switch** Mutes RF output. For setting up multiple systems or adjusting settings without transmitting unwanted RF or audio signals.

③ **Audio Indicators** Use the control wheel to adjust the audio so that, for the average input signal level, the top two yellow LEDs flicker and the lower LEDs are solid. Press the enter button to save the value, exit to cancel. The red clip LED indicates the inputs are over driven. Reduce the level at the audio source or change the input sensitivity of the rack unit from the **AUDIO>INPUT** menu.

④ **Status Display and Controls** Use the navigation buttons to access the configuration menu. Push the control wheel to move the cursor to the next item. Turn the control wheel to change a parameter—the enter button flashes. Press it to save the value. Press the exit button to cancel changes and return to the previous menu.

⑤ **Headphone Monitoring** The monitor control adjusts signal output to the 3.5 mm headphone jack. Push button to toggle between transmitters. Monitor clip LED indicates headphone audio is clipping.

⑥ **Power Switch** Turns the unit on and off. Power switch and front panel can be locked from the utilities menu.

Rear Panel Connectors

⑦ **Primary Side Switch** Primary power switch, only front power switch can be locked from utilities menu.

⑧ **Power AC** mains power input, IEC Connector 100-240 Vac.

⑨ **AC mains power pass-through** Use with an IEC extension cable to supply AC power to another device. Unswitched.

⑩ **Antenna (BNC) port** Attach supplied antennas. If you are rack mounting, use a front panel or remote mounting kit from Shure.

⑪ **LOOP OUT** Sends audio signal going into the transmitter to another device. See LOOP Applications.

⑫ **Audio Inputs** Connect to balanced or unbalanced outputs. Use either connector for mono input. Accepts XLR or 6.35 mm (1/4") TRS

⑬ **Ethernet Jack** Accepts an RJ-45 jack for Ethernet network interface. Two port Ethernet switch for networking multiple units.

photos for placement only

new illustrations to come...

Menu Structure and Navigation

The home menu screen displays a summary of transmitter parameters and available menu choices. Depending on configuration, the home screen will display the following information:

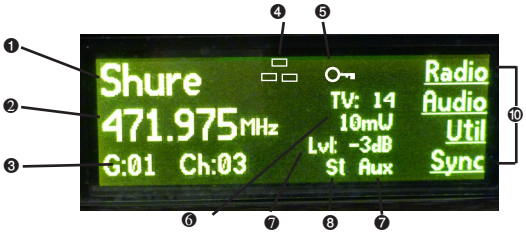

New illustration to come...

Transmitter Parameters

① - Audio channel name
② - Frequency setting
③ - Group and Channel
④ - Network Icon
⑤ -Lock Icon
⑥ - RF Power Level
⑦ - Audio Level
⑧ - Mix -mono or stereo
⑨ - Aux/Line in
⑩ - Submenus
⑪ - TV Channel

Menu Navigation

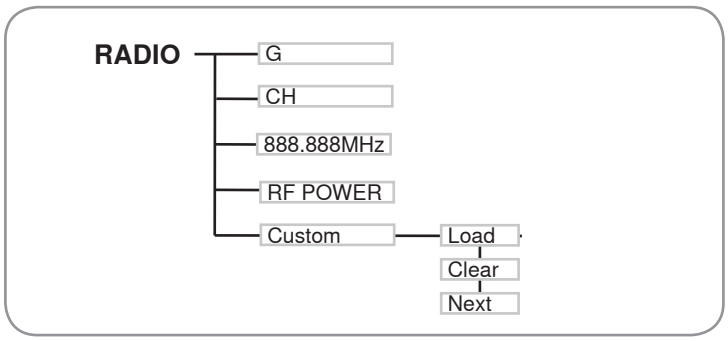

Radio - RF Settings

RADIO - Displays RF settings

G - Sets the group number - a set of compatible frequency channels
CH - Sets the channel number - within the group
888.888MHz - Frequency selection; adjustable in increments of 1MHz or kHz
RF POWER - Select from 10, 50, or 100 mW (varies by region)
Custom - For creating custom frequency groups
Load - Searches network for custom groups and loads devices found
Clear - Clears custom groups
Next - Displays channel and frequency of groups

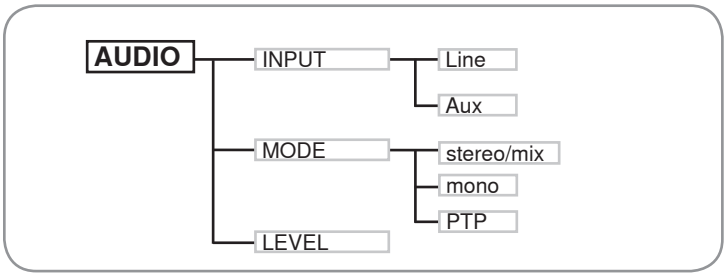

Audio Settings

INPUT - Sets nominal input level

LINE +4 dBu - line level
AUX –10dBV - aux level

MODE - Selects monitor mode

STEREO/MX - Transmits both channels
MONO - Transmits a mono signal to bodypack
POINT TO POINT - Set up P10T for point to point wireless audio (see Point to Point section of guide)

LEVEL - Adjusts output level

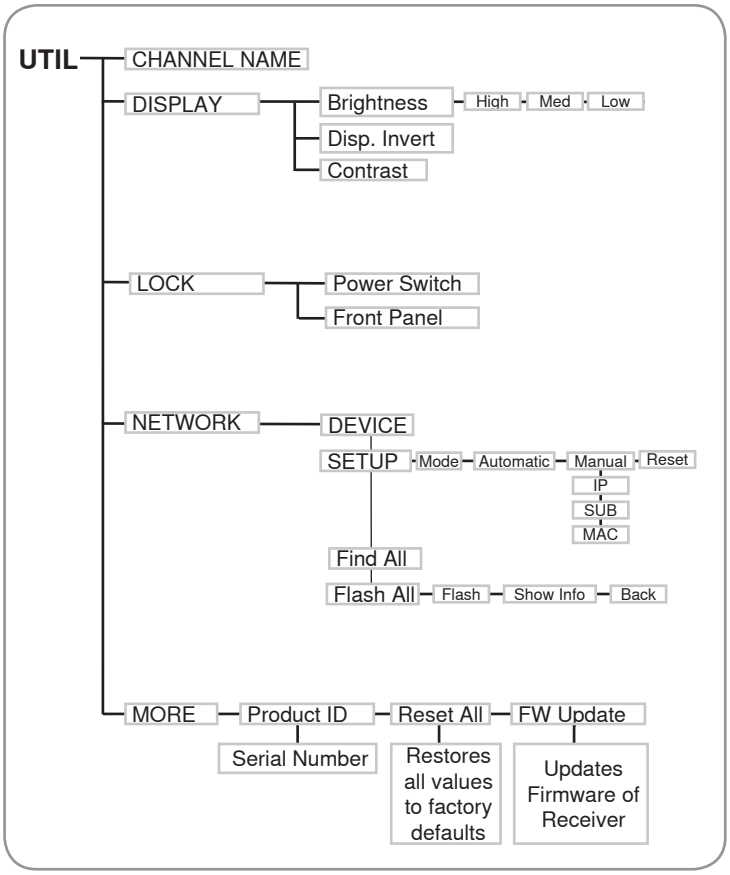

Utility Settings

CHANNEL NAME - Changes the name on the LCD display (this name is uploaded to the bodypack with sync) Use control wheel to change letters.

DISPLAY - Changes the display format
- **Brightness** - Adjusts brightness to high, medium or low
- **Disp. Invert** - Inverts display
- **Contrast** - Changes the display contrast

LOCK - Locks power switch and front panel controls.
Front Panel and Power Switch - Turn control wheel to select off or locked.

NETWORK - Network set-up displays all networked and linked devices

- **DEVICE** - Turn control wheel to change device ID name
- **SETUP - MODE** - Set TX to manual or automatic
  - *Automatic* - Automatic - press flashing Enter button
  - *Manual* - Manually adjust IP, Subnet, MAC - view only
  - *Reset* - Resets all devices to factory default and deletes all previous settings

- **FIND ALL** - Displays all devices on network
  - *Show* - Flashes LEDS of all devices on network
  - *Info* - Displays TX information
  - *Back* - Returns to previous screen

MORE - Displays product ID, resets and current firmware

- **Product ID** - Displays Product serial number
- **Reset All** - Restores all values on all devices on the network to factory default settings
- **FW Update** - Sends updated firmware to receiver

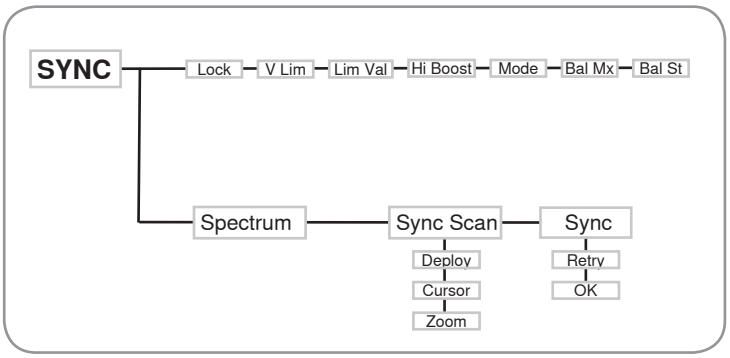

Sync Settings

RX SETUP - These settings are sent to the bodypack during a sync (when the sync direction is from the transmitter). The default NO CHANGE parameter will not change the bodypack settings. Use control knob and exit/enter buttons to change these settings.

LOCK - Lock bodypack
V LIMIT - Volume limit on/off
LIM VAL - Volume limit value
HIBOOST - High frequency boost
MODE - Stereo (ST) or MixMode (MX)
BAL MX - CH. 1 (L) and CH. 2 (R) mix for MixMode
BAL ST - Left (L) and right (R) balance for stereo mode

Spectrum

After running a full spectrum scan on the RX, the RF data can be viewed in **Sync Scan** and deployed from the TX.

Deploy - Sends open frequencies to available TX
Cursor - Control cursor with control wheel to select open frequencies
Zoom - Turn control wheel to zoom into graphic

Retry - Retry at a different time
OK - Successful sync of TX and RX

P10R Bodypack Receiver

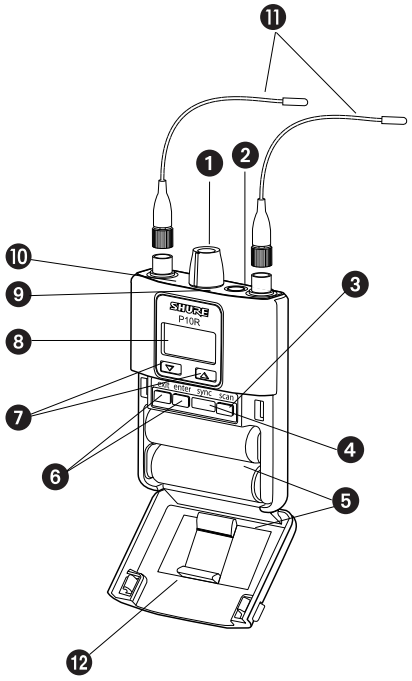

Bodypack Receiver

① **Power Switch and Volume Control** Turns the bodypack on and off and adjusts earphone volume.
② **3.5 mm Earphone Jack** Insert earphones here.
③ **Scan Button** Press the scan button to find an available frequency. Press and hold for two seconds to find the group with the most available channels.
④ **IR Window** For transmitting settings between bodypack and rack unit.
⑤ **Battery Compartment** Requires 2 AA batteries or rechargeable battery. Open by pressing the latches on both sides and pulling.
⑥ **Menu buttons** Use in conjunction with the ▼▲ buttons to access the configuration menus.
⑦ **▼▲ Buttons** Use to adjust the audio mix (in MixMode only), or in conjunction with the menu buttons to change settings.
⑧ **LCD Screen** Displays current settings and menus.
⑨ **Tri-Color Battery LED** illuminates green, amber, or red to indicate battery power. When red, change batteries immediately.
⑩ **Blue RF LED** Indicates the bodypack is receiving a signal from the transmitter.
⑪ **Detachable Antennas** SMA Connector
⑫ ***Removable AA Adapter** P10R is shipped with an adapter which can be removed to accommodate a Shure rechargeable battery pack.

*Note: to remove adapter, open door and slide adapter out. To replace, place adapter in place and press, there will be an audible click when seated.

RF Settings

RADIO	
G	Sets the group number
CH	Sets the channel number
888.888MHz	Manual frequency selection
Squelch	Adjust squelch setting
Full SCAN	Performs spectrum scan and displays open frequencies in a graphical interface
RF Pad	Attenuates antenna signals in 3 dB increments

Audio Settings

AUDIO		
MODE	Selects monitor mode	
	STEREO	Stereo
	MIXMODE	MixMode
HIBOOST	High-frequency EQ boost	
	OFF	flat
	4 dB	+4 dB @ 10 kHz
	2 dB	+2 dB @ 10 kHz
V Limit	**ON**	Limits volume level
	Value	3–9: analogous to volume knob position (for example, 5 is equal to the 5th dot on the volume knob)
Gain	**HI/Standard**	Hi mode increases gain by 10 dB

Utilities and Display Settings

UTILITIES	
CUEMODE	Enters CueMode (to exit, press **enter** and select **EXIT CUEMODE**)
DISPLAY	Changes the display format
CONTRAST	Changes the display contrast
LOCK PANEL	Locks all controls except power and volume. To unlock, press **exit**, select **OFF**, and press **enter**.
BATTERY	Displays the following: **Minutes Left, Temperature, Status, Cycle Count,** and **Health**
RESTORE	Returns receiver to factory default settings.

Battery Life*

Battery Indicator	Tri-Color Battery LED	Approximate Hours Remaining			
		Alkaline Volume Level 4	**Alkaline Volume Level 6**	**Alkaline Volume Level 8**	**Li-ION**
	Green	5–7	2½-3	1½	7-8
	Green	3½–4	2½–2	1¼	6-7
	Green	3–3½	1½–2	1	4-6
	Green	2–2½	1½–1	¾	2-4
	Amber	½–1	1-¾	½	1-2

***Test specs** using Energizer brand AA Alkaline batteries:

Receiver (RX) Settings:

Output driving Shure SE425 earphones
Corresponding SPL @ Ear: ~115 dB SPL
Note: SPL at ear will vary with fit and earphones
HIBOOST - OFF
V. LIMIT - OFF

Transmitter (TX) Settings:

Audio Input: pink noise* @ +8.7 dBV
Transmitter Input mode: LINE
Transmitter Input level: -9 dB

*Pink Noise is a signal with a frequency spectrum such that the power spectral density is inversely proportional to the frequency. In pink noise, each octave carries an equal amount of noise power.

Note: Using lower-impedance earphones, different battery types and higher gain settings in a PSM system may cause the receiver battery life to be different than specified.

Multiple System Setup

When setting up multiple systems, designate a single bodypack to scan for available frequencies and download them to all the rack units.

The bodypack must be from the same frequency band as all the transmitters.

1. Power on all the rack units. **Turn off the RF**. (This prevents them from interfering with the frequency scan.)

   Note: Turn **on** all other wireless or digital devices as they would be during the performance or presentation (so the scan will detect and avoid any interferance they generate).

2. Use the bodypack to **scan for a group** by pressing and holding the **scan** button for **two seconds**. The bodypack displays the group and the number of available channels, and flashes **SYNC NOW...**.

   Important: Note the number of available channels. If you have more rack units than available channels, eliminate potential sources of interference and try again, or call Shure Applications for assistance.

3. Sync the bodypack with the first rack unit by aligning the IR windows and pressing **sync**.
4. Press **scan** again on the bodypack to find the next available frequency.
5. Sync the bodypack with the next rack unit.
6. Repeat with all the rack units.
7. Sync each performer's bodypack to its respective rack unit by aligning the IR windows and pressing **snyc**. DO NOT press scan on the bodypacks.
8. Turn on the RF on all rack units. The systems are ready to use.

MixMode for Multiple Systems

Configure each system for MixMode. From the mixing console, send a mix of the whole band to input 2 of the first transmitter. Connect the **LOOP OUT R** output to the **CH. 2 IN** input of the next transmitter. Continue the chain with all the transmitters.

Next, create solo mixes for each performer. Send each mix to input 1 of the transmitter for that performer.

CueMode

CueMode allows you to upload the name and frequency settings from multiple rack units and store them as a list on a single bodypack. You can then, at any time, scroll through that list to hear the audio mix from each transmitter, just as each performer does during a show.

CueMode lists are retained even if CueMode is exited, the bodypack is turned off, or batteries are removed.

Note: Set the channel frequency and assign display names for each transmitter **before** creating your CueMode list.

Adding Transmitters to the CueMode List

Note: The transmitter must be from the same frequency band as the bodypack.

1. Open the battery door and press the **enter** button.
2. From the main menu, scroll to **UTILITIES** and press **enter**. Select **CueMode** and press **enter** again.
3. Align IR windows and press **sync** on the rack unit.

   The LCD displays **SYNC SUCCESS** after frequency and name data are uploaded to the CueMode list. It also displays the CueMode number for that transmitter and the total number of transmitters.

4. Repeat the above step for each transmitter.

Note: Syncing while in CueMode does not change any of the settings on the bodypack.

Auditioning Mixes

1. Enter CueMode from the **UTILITIES** menu.
2. Use the ▼▲ buttons to scroll through your CueMode list to hear the mixes.

Exiting CueMode

Exit CueMode by pressing **enter** and selecting **EXIT CUEMODE**.

Managing CueMode Mixes

While in Cue Mode, you can access the following menu by pressing **enter**:

REPLACE MIX Select and press sync on a rack unit to upload new data for the current mix (for example, if you have changed the transmitter frequency).
DELETE MIX Removes the selected mix.
DELETE ALL Removes all mixes.
EXIT CUEMODE Exits CueMode and returns the bodypack to the previous frequency setting.

Frequency Scan

The scan feature analyzes the RF environment for interference to identify available frequencies. The PSM1000 has three frequency scan modes:

- **Channel Scan** Press the **scan** button on the bodypack. Finds the first available channel.
- **Group Scan** Press and hold the **scan** button for two seconds. Finds the group with the greatest number of available channels. (Each group contains a set of frequencies that are compatible when operating multiple systems in the same environment.)
- **Full Scan** From the bodypack menu select, **Radio>Full Scan**. Press **Scan** to initiate a full scan. Press **Spectrum Scan** to view full results in a graphical display.

  Note: follow these steps when doing a full scan:
  1.)Turn on all TX's

  2.) Turn off all wireless microphone transmitters

  3.) Never do a scan near a transmitter in the same frequency band

Sync

The PSM1000 transfers settings in either direction: from the bodypack to the rack unit, or from the rack unit to the bodypack.

- **Downloading settings from the bodypack:** First press the **scan** button on the bodypack. Then align the IR windows and press the **sync** button on the rack unit while the bodypack display is flashing "SYNC NOW...". The **level** LEDs flash on the rack unit.
- **Sending settings to the bodypack:** Align the IR windows and press the **sync** button on the rack unit. The blue LED on the bodypack flashes. Press **sync** again to transfer settings.
- Note: When properly aligned the IR window on the transmitter illuminates

Custom Groups

This feature allows you to create your own groups of frequencies.

Creating new groups...

Menu: Radio > Custom

1. Turn the **Control** wheel to select a custom group number (U1, U2, U3, etc.)
2. Push the **Control** wheel to move to the Channel parameter and turn it to select a channel (01, 02, 03, etc.)
3. Push the **Control** wheel to move to the Freq parameter and select a frequency for that channel.
4. Push the NEXT menu key to select a frequency for the next channel in that group.
5. Load deploys groups over network
6. Clear deletes all custom groups.

MixMode

Some performers need to hear more of their own voice or instrument, while others want to hear more of the band. With MixMode, the performer creates their own mix using the balance control (▼▲ buttons) on the bodypack.

To use MixMode, send a solo mix of the performer to the **CH. 1 IN** input on the transmitter, and send a band mix to the **CH. 2 IN** input.

Set the performer's bodypack for MixMode. The bodypack combines the two signals and sends them to both earphones, while the balance control on the bodypack adjusts the relative levels for each.

LOOP Applications

Use **LOOP OUT** L (left) and R (right) outputs to send a copy of the audio signal going into the transmitter to other devices. Following are a few of the many applications for these outputs.

Note: The input level control and the input pad do not affect the **LOOP OUT** signals.

Stereo for Multiple Systems

Send one stereo signal from the mixing console to the inputs on the first transmitter, then connect the LOOP outputs to the inputs on the next transmitter. Repeat for all transmitters to form a chain.

Floor Monitors

Send the audio from the LOOP outputs to on stage loudspeakers. The bodypack and the on stage monitors receive the same audio signals.

Recording Devices

To record a performance, connect the LOOP outputs to the inputs of a recording device.

Squelch

Squelch mutes audio output from the bodypack when the RF signal become noisy. While squelch is activated, the blue LED on the bodypack turns off.

For most installations, squelch does not need adjustment, and it keeps the performer from hearing hiss or noise bursts if the RF signal becomes compromised. However, in congested RF environments or in close proximity to sources of RF interference (such as large LED video panels), the squelch may need to be lowered to prevent excessive audio dropouts. With lower squelch settings, the performer may hear more noise or hiss, but will experience fewer audio dropouts.

Note: Before lowering squelch, first try to eliminate the problem by finding the best set of frequencies for your installation and removing potential sources of interference.

Caution: Turning off or lowering the squelch setting can increase the noise level and cause discomfort to the performer:

- Do not lower the squelch setting unless absolutely necessary.
- Turn earphone volume to the lowest setting before adjusting squelch.
- Do not change the squelch setting during a performance.
- Turn up the transmitter setting to make noise or hiss less noticeable.

Squelch Settings

HIGH (NORMAL)	Default factory setting.
MID	Moderately decreases the signal-to-noise ratio required to squelch the receiver.
LOW	Greatly decreases the noise squelch threshold.
PILOT ONLY	Turns off noise squelch leaving only pilot squelch on.
	Symbol appears in display window
NO SQUELCH	Turns off noise and pilot tone squelch. (Sometimes used as a debugging tool by monitor engineers or RF coordinators to "listen" to the RF environment.)
	Symbol appears in display window

Point-to-Point Wireless Audio

PTP mode can be used to allow a P10T to transmit to a UHFR receiver. This allows a transmitter and receiver set-up where both units are racked and powered by AC.

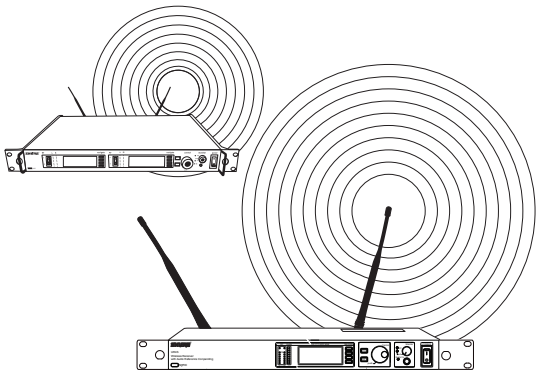

For more information visit:
www.shure.com/americas/products/personal-monitor-systems

Ethernet Connection

Networking Transmitters

Basic Network

Each transmitter has an RJ-45 port on the back for connecting to other transmitters over an Ethernet network. Networking transmitters allows you to automatically set channels for all the transmitters with a single group scan command.

❶ Connect transmitter to an Ethernet router with DHCP service.

❷ Use Ethernet switches to extend the network for larger installations.

❸Use the transmitter's default network setting

(Util > Network > Mode = Automatic).

❶ Router with DHCP

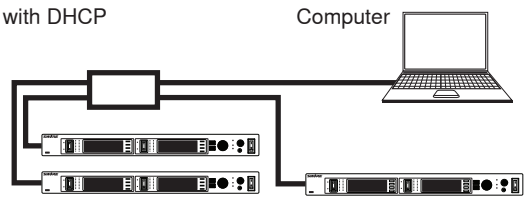

❷ Router with DHCP and switches

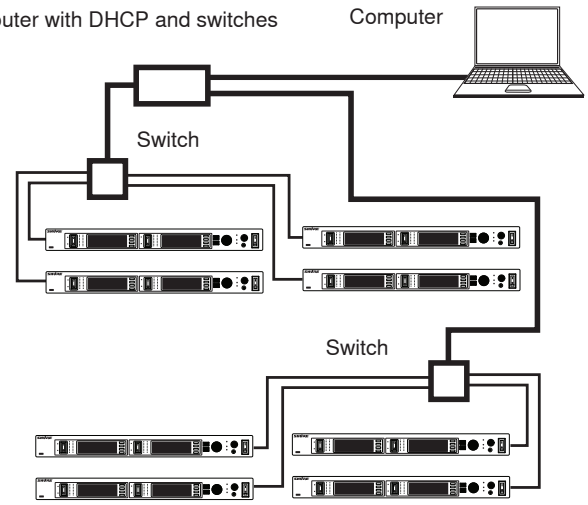

❸ Transmitter's default network setting

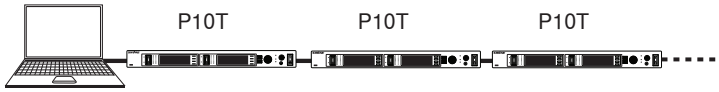

Accessing the Network with a Computer

You can also control and monitor all networked units through the Shure Wireless Workbench software.

If you want to use the Wireless Workbench software, connect your computer to the network and install the software from the CD that came with the transmitter. Make sure your computer is configured for DHCP (from Control Panel, click Network Connections. Double-click on Local Area Connection. Select Internet Protocol (TCP/IP) and click Properties. Select Obtain IP address automatically and Obtain DNS server address automatically and click OK).

NOTE: Some security software or firewall settings on your computer can prevent you from connecting to the transmitter. If using firewall software, allow connections on port 2201.

Static IP Addressing

The transmitter also supports static IP addressing. Assign your own IP addresses (Util > Network > Mode = Manual). **NOTE:** Dual transmitters use a single IP address, which may be set through either LCD interface.

Network Parameters

NOTE:

- The transmitter reboots after you press **ENTER** to accept network parameter changes
- These settings affect both transmitters (the dual transmitter is treated as a single network device).

Set the Transmitter Network Mode

Menu: Util > Network

1. Push the **Control** wheel to move the cursor to the Mode parameter.
2. Turn the **Control** wheel to set the transmitter to one of the following values:

- **Automatic**: use this setting when connecting the transmitter to a DHCP server.
- **Manual**: allows you to set the transmitter to a specific IP address or subnet.

IP Address and Subnet

Menu: Util > Network

NOTE: To change these settings, the network mode must be set to Manual.

1. Push the **Control** wheel to move the cursor to any of the following parameters:

- IP (IP address)
- Sub (Subnet mask)

2. Turn the **Control** wheel to change the value.

Device ID

Assists in identifying transmitters through the Wireless Workbench Software (has no effect on network identification).

Menu: **Util > Network**

1. Push the **Control** wheel to move the cursor to the DevID parameter.
2. Turn the **Control** wheel to set the transmitter to change the value.

Shure Wireless Workbench Software

Shure Wireless Workbench software includes a variety of useful tools for installing and managing multiple wireless systems. Instructions on using the Wireless Workbench software are available in the online help files after you install the software.

Automatic Frequency Selection

Follow these steps to use the channel scan and group scan features on the transmitter.

Before you begin

- Turn all RF off.
- Install the transmitters and power them on.
- Mute all inputs on mixing devices connected to the transmitter.
- Turn off the RF transmission on the transmitters for the systems you are setting up.
- Turn on potential sources of interference such as other wireless systems or devices, computers, CD players, large LED panels, effects processors, and digital rack equipment so they are operating as they would be during the presentation or performance.

Individual Transmitter

1. On receiver, select **Scan** to find an open channel.
2. Sync receiver to transmitter by aligning it with IR port and pressing sync button.

Networked Transmitters

With networked transmitters, you can take advantage of the group scan feature to set group and channel settings for all the transmitters at the same time.

Perform a group scan from any receiver

1. Press and hold scan button for 2 seconds to initiate scan.
2. Sync scan results to any transmitter on the network via the IR port.
3. Follow the transmitter instructions to deploy frequencies to all networked transmitters
4. Sync receivers with the transmitters carrying the desired mix.

NOTE: The group scan feature only works for transmitters in the same frequency band. For example, if you did a group scan on a “G10” band transmitter, all “G10” band transmitters would be set up, but not “J8” band transmitters.

Multiple Transmitters—Not Networked

If your transmitters are not networked (or in different bands), the group scan cannot automatically set their group and channel settings. However, you can still take advantage of the group scan feature to find the group with the most open channels and the channel scan feature to find open channels in that group.

Find the group with the most open channels

Perform a group scan following the steps from the **Multiple System Setup** section in the user guide for setting up multiple transmitters which are not networked.

NOTE: Transmitters in different bands (G10, J8, etc.) do not need to be set to the same group.

Spectrum Scan

Use this feature to scan the full RF spectrum for potential sources of interference and deploy open frequencies to all transmitters on the network. A graphical representation of the scan data may be viewed on both the transmitter and receiver. This allows you to scroll through the graph to reveal details about the frequency and strength of the interfering signals.

Scanning and Deploying Frequencies

1. Turn off RF on all transmitters.

Collect the scan data. From the bodypack receiver **MAIN MENU,** select **RADIO > FULL SCAN > RUN SCAN**

2. The receiver displays **SPECTRUM SCAN** and scans the full spectrum.
3. **Load the scan data from the bodypack receiver to the rack transmitter.** Align the IR windows and press **Sync > Spectrum > SyncScan**
4. The transmitter displays the scan data as a graph and gives options for viewing and deploying.

Search network for devices. From the rack transmitter **Sync > Spectrum** menu, press **Deploy**.

The rack transmitter searches the network for all available transmitters.

5. **Choose a group.** Use the control wheel to select from the available groups.

   The number of open frequencies for each group is displayed next to Open Frequencies:
6. **Deploy frequencies.** Press the flashing enter button to deploy frequencies to all channels.

   The LEDs flash on all affected channels.

Viewing Spectrum Data

From the Bodypack Receiver

MAIN MENU > RADIO > FULL SCAN > SPECTRUM

- Adjust the cursor position using the ▼▲ keys.
- Press enter to zoom in at the cursor position. Press exit to zoom out.
- Press scan to display frequency and power of signal at the cursor position.

From the Rack Transmitter

Sync > Spectrum

- Adjust the cursor position by pressing Cursor and using the control wheel.
- Frequency and power of signal at the cursor position is displayed at the top of the screen.
- Press Zoom and use the control wheel to zoom in and out.

Connecting the PSM1000 via Ethernet to an AMX or Crestron system.

Message Types

The Control system can send two (2) types of command messages, as follows:

SET - The SET command is sent from the control system to the Shure device to change the value of a parameter. This is used to SET the parameter to a specific value. Once a SET command is sent, the Shure device will send back a REPORT string with the current resultant setting.

GET - The GET command gets the current value of a parameter. Once a GET command is sent, the Shure device will send back a REPORT string with the current setting.

The Shure device can send a response with one (1) type of response message, as follows:

REPORT - The REPORT string reports the current value for a parameter. The REPORT string is sent from the Shure device to the Control system in response to a SET or GET command. The REPORT string is also sent when the value of the parameter is changed on the Shure device.

- All messages sent and received are ASCII characters.
- Each message begins with a “<” followed by a space.
- Each message ends with a space followed by an “>”.
- Each message is terminated by a carriage return and line feed (CRLF). The control system may need to enter the hex value of this, which is equivalent to 0x0D0A. Please see the control system user guide for specific information on how to enter this.
- If the message is a channel parameter, the parameter string must be preceded by the number of the channel.
- If the message is a box parameter, there should be no channel number in the string.

Example Messages

This section contains example messages.

Example Messages for Channel Parameters

< GET 1 FREQUENCY >/0d/0a

< REPORT 1 FREQUENCY 578000 >/0d/0a

Example Messages for Box Parameters

< SET DEVICE_NAME Shure >/0d/0a

< REPORT DEVICE_NAME Shure >/0d/0a

	Command	Response
View Transmitter Name	< GET DEVICE_NAME >/0d/0a	< REPORT DEVICE_NAME vvvvvvvv >/0d/0a
Set Channel Name	< SET x CHAN_NAME vvvvvvvv >/0d/0a	< REPORT x CHAN _NAME vvvvvvvv >/0d/0a
Get Channel Name	< GET x CHAN_NAME >/0d/0a	< REPORT CHAN _NAME vvvvvvvv >/0d/0a
Set Audio Level	< SET x AUDIO_IN_LVL vvvv >/0d/0a	< REPORT x AUDIO_IN_LVL vvvv >/0d/0a
View Audio Level	< GET x AUDIO_IN_LVL >/0d/0a	< REPORT x AUDIO_IN_LVL vvvv >/0d/0a
Set Transmitter Group & Channel	< SET x GROUP_CHAN gg,cc >/0d/0a	< REPORT x FREQUENCY vvvvvvvvvv >/0d/0a < REPORT x GROUP_CHAN gg,ccvvv >/0d/0a
View Transmitter Group & Channel	< GET x GROUP_CHAN >/0d/0a	< REPORT x GROUP_CHAN gg,cc >/0d/0a
Set Transmitter Frequency	< SET x FREQUENCY vvvvvvvvvv >/0d/0a	< REPORT x FREQUENCY vvvvvvvvvv >/0d/0a < REPORT x GROUP_CHAN --,--vvv >/0d/0a
View Transmitter Frequency	< GET x FREQUENCY >/0d/0a	< REPORT x FREQUENCY vvvvvvvvvv >/0d/0a
Set RF Tx Level	< SET x RF_TX_LVL vvvvvv >/0d/0a	< REPORT x RF_TX_LVL vvvvvv >/0d/0a
View RF Tx Level	< GET x RF_TX_LVL >/0d/0a	< REPORT x RF_TX_LVL vvvvvv >/0d/0a
Set RF Mute	< SET x RF_MUTE vvvv >/0d/0a 1 = mute, 0 = unmute	< REPORT x RF_MUTE vvvv >/0d/0a 1 = mute, 0 = unmute
View RF Mute	< GET x RF_MUTE >/0d/0a 1 = mute, 0 = unmute	< REPORT x RF_MUTE vvvv >/0d/0a 1 = mute, 0 = unmute
Set Audio Tx Mode	< SET x AUDIO_TX_MODE vvvv >/0d/0a 1 = mono, 2 = point to point, 3 = stereo	< REPORT x AUDIO_TX_MODE vvvv >/0d/0a 1 = mono, 2 = point to point, 3 = stereo
View Audio Tx Mode	< GET x AUDIO_TX_MODE >/0d/0a	< REPORT x AUDIO_TX_MODE vvvv >/0d/0a 1 = mono, 2 = point to point, 3 = stereo
Set Audio Input Line Level	< SET x AUDIO_IN_LINE_LVL vvvv >/0d/0a 0 = off (Aux), 1 = on (Line)	< REPORT x AUDIO_IN_LINE_LVL vvvv >/0d/0a 0 = off (Aux), 1 = on (Line)
View Audio Input Line Level	< GET x AUDIO_IN_LINE_LVL >/0d/0a	< REPORT x AUDIO_IN_LINE_LVL vvvv >/0d/0a 0 = off (Aux), 1 = on (Line)
Set Metering Rate	< SET x METER_RATE vvvvvvvvvv >/0d/0a 0 = off, value in milliseconds	< REPORT x METER_RATE vvvvvvvvvv >/0d/0a 0 = off, value in milliseconds
View Metering Rate	< GET x METER_RATE >/0d/0a	< REPORT x METER_RATE vvvvvvvvvv >/0d/0a 0 = off, value in milliseconds
Audio Meter Level	N/A	< REPORT x AUDIO_IN_LVL_L vvvvvvvvvv >/0d/0a < REPORT x AUDIO_IN_LVL_R vvvvvvvvvv >/0d/0a

SPECIFICATIONS

PSM1000

RF Carrier Range
470–952 MHz
Note: varies by region

Compatible Frequencies
Per band: 49

Tuning Bandwidth
US: 72–80 MHz
varies by region

Operating Range (environment dependent)
90 m (300 ft)

Audio Frequency Response
35 Hz–15 kHz

Signal-To-Noise Ratio (A-Weighted)
90 dB (typical)

Total Harmonic Distortion (ref. ±34 kHz deviation @1 kHz)
<0.5% (typical)

Companding
Patented Shure Audio Reference Companding

Spurious Rejection (ref. 12dB SINAD)
>80 dB (typical)

Frequency Stability
±2.5 ppm

MPX Pilot Tone
19 kHz (±0.3 kHz)

Modulation
FM*, MPX Stereo
* ±34 kHz deviation (nominal)

Operating Temperature
-18°C–+57°C

P10R

Tri-Band Filtering
–3 dB at 30.5 MHz from the center frequency of each band

Active RF Gain Control
31 dB
Adjusts RF sensitivity to provide more RF dynamic range

RF Sensitivity (at 20 dB SINAD)
2.2 μV

Image Rejection
>90 dB

Adjacent Channel Rejection
>70 dB

Squelch Threshold
22 dB SINAD (±3 dB) (default setting)

Intermodulation Attenuation
>70 dB

Blocking
>80 dB

Audio Output Power (1kHz @ <1% distortion, peak power, @32Ω)
100 mW per output

Minimum Load Impedance
9.5 Ω

High Boost
Selectable: +2 dB , +4 dB @ 10 kHz

Volume Limiter
Selectable: 3–9
Limits volume adjustment knob. Selected value analogous to volume knob increment.

Net Weight
186 g (with batteries)

Dimensions
99 mm X 66 mm X 23 mm

Battery Life
4–6 hours (continuous use) AA Batteries

P10T

RF Output Power
Selectable: 10, 50, 100 mW (+20 dBm)
varies by region

RF Output Impedance
50 Ω (typical)

Net Weight
850 g

Dimensions
483 mm X 343 mm X 44 mm

Power Requirement
Input: 100-240V AC, 50/60 Hz, 0.5A max (5.5 max outlet loaded)
Output: 100-240V AC, 5A max, unswitched

Audio Input

Connector Type
Combination XLR and 6.35 mm (1/4") TRS

Polarity
XLR: Non-inverting (pin 2 positive with respect to pin 3)
6.35 mm (1/4") TRS: Tip positive with respect to ring

Configuration
Electronically balanced

Impedance
70.2 kΩ (actual)

Nominal Input Level
switchable switchable: +4 dBu, –10 dBV

Maximum Input Level
+4 dBu: +29.2 dBu
–10 dBV: +12.2 dBu

Pin Assignments
XLR: 1=ground, 2=hot, 3=cold
6.35 mm (1/4") TRS: Tip=hot, Ring=cold, Sleeve=ground

Phantom Power Protection
up to 60 V DC

Audio Output

Connector Type
6.35 mm (1/4") TRS

Configuration
Electronically balanced

Impedance
Connected directly to inputs

BAND	RANGE	COUNTRY	Output Power (mW)
G10	470-542	US, IA	10/50/100
G10E		UK, EU, Peru	10/50
H8Z	518-582	NZ, Korea	10/50
J8	554-626	US, IA	10/50/100
J8E		EMEA	10/50
K10E	596-668	UK, EU, Australia	10/50
L8	626-698	US, IA, Aus	10/50/100
L8E		Emea	10/50
L9E	670-742	China	10/50
L10	670-742	HK	10/20
P8	710-790	EU	10/50
Q21	710-787	China	10/50
Q22E	750-822	EU	10/50
Q23	750-806	HK	10/20
R26	794-806	Taiwan	6/10
R27	794-806	Thailand/EMEA	10/50
A24	"779-788 797-806"	Japan	6/10
X1	944-952	US	10/50/100

NOTE:
This Radio equipment is intended for use in musical professional entertainment and similar applications. This Radio apparatus may be capable of operating on some frequencies not authorized in your region. Please contact your national authority to obtain information on authorized frequencies and RF power levels for wireless microphone products.

Shure Rechargeable SB900

The SB900 is a rechargeable Lithium-ion battery with a capacity of 1450 mAh.

Dimensions

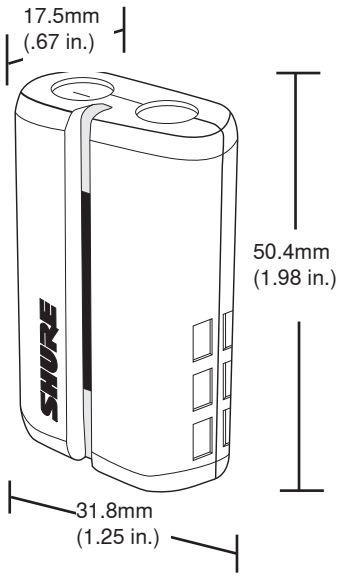

Note: Place battery into charger, slotted side down with Shure logo facing down, warnings facing up.

CAUTION: Danger of explosion if battery incorrectly replaced.

Replace only with the same or equivalent type

WARNING: Battery packs shall not be exposed to excessive heat such as Sunshine, fire or the like.

- **Battery Packs may explode or release toxic materials**
- **Never put batteries in mouth. If swallowed, contact your physician or local poison control center.**
- **Do not short circuit; may cause burns or catch fire**
- **Do not charge or use battery packs with other than specified Shure products**
- **Dispose of battery packs properly. Check with local vendor for proper disposal of used battery packs.**
- **Use this battery charger only with the Shure Model PS50 series power supply.**

This equipment is intended to be used in professional audio applications

EMC conformance is based on the use of supplied and recommended cable types. The use of other cable types may degrade EMC performance.

Use this battery charger only with the Shure charging modules and battery packs for which it is designed. Use with other than the specified modules and battery packs may increase the risk of fire or explosion.

Changes or modifications not expressly approved by Shure Incorporated could void your authority to operate this equipment.

Specifications

Charge Temperature:	0°C to 45°C (recommended)
Constant Charge Voltage:	4.2V +/-0.05V
Constant Charge Current:	750 mAh
Nominal Voltage:	3.7V
Rated Capacity:	1450 mAh

For more information on batteries and chargers visit: www.shure.com

ACCESSORIES AND PARTS

Furnished Accessories

P10R Antenna	
470–530 MHz	UA700
540–626 MHz	UA710
596–692 MHz	UA720
670–830 MHz	UA730
830–952 MHz	UA740
P10T Antenna	
470–542 MHz	UA820G10
554-626 MHz	UA820J8
596-668 MHz	UA820K1
626-698 MHz	UA820L8
670-742 MHz	UA820LCH
710-790 MHz	UA820P8
750-822 MHz	UA820Q2
944-952 MHz	UA820X
518-582 MHz	UA820H8
Front Mount Antenna Cable	95A9023
Zipper Bag	95A2313
Rack mount Bracket, Long	53A8612
Rack mount Bracket, Short	53A8611
Link Bar	53B8443
Hardware Kit (Rack mounting Screws)	90AR8100
Bumper Kit	90B8977

Optional Accessories

8-to-1 antenna combiner for better RF performance	PA821SWB
4-to-1 antenna combiner with power distribution to 4 transmitters (better RF performance and eliminates need for external power supply)	PA421SWB
Passive Directional Antenna	PA805SWB
Helical Antenna	HA-8089
Passive Omnidirectional Antenna	UA860SWB
Coaxial Cable, BNC-BNC, RG58C/U type, 50 Ohm, 2 ft length (0.6 m)	UA802
Coaxial Cable, BNC-BNC, RG58C/U type, 50 Ohm, 6 ft length (2 m)	UA806
Coaxial Cable, BNC-BNC, RG8X/U type, 50 Ohm, 25 ft length (7.5 m)	UA825
Coaxial Cable, BNC-BNC, RG8X/U type, 50 Ohm, 50 ft length (15 m)	UA850
Coaxial Cable, BNC-BNC, RG213/U Type, 50 Ohm, 100 ft length (30 m)	UA8100

CERTIFICATION

P10T, P10R

This Class B digital apparatus complies with Canadian ICES-003.

Cet appareil numérique de la classe B est conforme à la norme NMB-003 du Canada.

Meets requirements of EMC standards EN 300 422 Parts 1 and 2 and EN 301 489 Parts 1 and 9.

P10T

Certified under FCC Parts 74. (**FCC ID:** DD4P10TA, DD4P10TB, DD4P10TC, DD4P10TD, DD4P10TJ). Certified by IC in Canada under RSS-123 and RSS-102. (**IC:** 616A-P10TA, 616A-P10TB, 616A-P10TC, 616A-P10TD). Meets essential requirements of European R&TTE Directive 99/5/EC, eligible to bear the CE mark.

Meets UL 60065 and CSA C22.2 No. 60065

P10R

Approved under the Declaration of Conformity (DoC) provision of FCC Part 15. Certified in Canada by IC to RSS-123. (**IC:** 616A-P10RA, 616A-P10RB, 616A-P10RC, 616A-P10RD).

Operation of this device is subject to the following two conditions: (1) this device may not cause interference, and (2) this device must accept any interference, including interference that may cause undesired operation of the device.

The CE Declaration of Conformity can be obtained from Shure Incorporated or any of its European representatives. For contact information please visit www.shure.com The CE Declaration of Conformity can be obtained from:

Authorized European representative:
Shure Europe GmbH
Headquarters Europe, Middle East & Africa
Department: EMEA Approval
Wannenacker Str. 28
D-74078 Heilbronn, Germany
Phone: +49 7131 72 14 0
Fax: +49 7131 72 14 14
Email: EMEAsupport@shure.de

LICENSING INFORMATION

Licensing: A ministerial license to operate this equipment may be required in certain areas. Consult your national authority for possible requirements. Changes or modifications not expressly approved by Shure Incorporated could void your authority to operate the equipment. Licensing of Shure wireless microphone equipment is the user's responsibility, and licensability depends on the user's classification and application, and on the selected frequency. Shure strongly urges the user to contact the appropriate telecommunications authority concerning proper licensing, and before choosing and ordering frequencies.

INFORMATION TO USER

This equipment has been tested and found to comply with the limits for a Class B digital device, pursuant to Part 15 of the FCC Rules. These limits are designed to provide reasonable protection against harmful interference in a residential installation. This equipment generates, uses and can radiate radio frequency energy and, if not installed and used in accordance with the instructions, may cause harmful interference to radio communications. However, there is no guarantee that interference will not occur in a particular installation. If this equipment does cause harmful interference to radio or television reception, which can be determined by turning the equipment off and on, the user is encouraged to try to correct the interference by one or more of the following measures:

- Relocate the receiving antenna.
- Increase the separation between the equipment and receiver.
- Connect the equipment into an outlet on a circuit different from that to which the receiver is connected.
- Consult the dealer.

Note: EMC conformance testing is based on the use of supplied and recommended cable types. The use of other cable types may degrade EMC performance.

Changes or modifications not expressly approved by the manufacturer could void the user's authority to operate the equipment.

Declaration of Conformity

EU Declaration of Conformity is available at: www.shure.com

SHURE

United States, Canada, Latin America, Caribbean:
Shure Incorporated
5800 West Touhy Avenue
Niles, IL 60714-4608 USA

Phone: 847-600-2000
Fax: 847-600-1212 (USA)
Fax: 847-600-6446
Email: info@shure.com

www.shure.com

Europe, Middle East, Africa:
Shure Europe GmbH
Wannenäckerstr. 28,
74078 Heilbronn, Germany

Phone: 49-7131-72140
Fax: 49-7131-721414
Email: info@shure.de

Asia, Pacific:
Shure Asia Limited
22/F, 625 King's Road
North Point, Island East
Hong Kong

Phone: 852-2893-4290
Fax: 852-2893-4055
Email: info@shure.com.hk

©2010 Shure Incorporated