PSM1000

Wireless Personal Monitor System

Online user guide for PSM1000 wireless personal monitor system.
Version: 7 (2019-I)

Table of Contents

PSM1000Wireless Personal Monitor System **4**

IMPORTANT SAFETY INSTRUCTIONS **4**

SAFETY PRECAUTIONS 5

CAUTION 5

WARNING 5

WARNING 5

HEARING PRECAUTIONS 5

Australia Warning for Wireless 5

Australia Warning for Wireless **6**

Switzerland Warning for Wireless **6**

LICENSING INFORMATION **6**

Information to the user **6**

PSM 1000 **7**

Features **7**

Touring-Grade Design and Performance 7

Robust RF Performance and Networked Control 8

Advanced Setup and Operation 8

Exceptional Audio Quality 8

Advanced Rechargeability Options 8

Components **8**

Quickstart Instructions **9**

Rack Mount Transmitter 9

Bodypack 11

Scan and Sync 11

Front Panel Controls **13**

Rear Panel 13

Transmitter Menu Structure and Navigation 14

Bodypack Receiver 21

RF Settings 22

Battery Life **25**

Multiple System Setup **26**

CueMode **26**

Adding Transmitters to the CueMode List 26

Auditioning Mixes 27

Exiting CueMode 27

Managing CueMode Mixes **27**

Frequency Scan **27**

Sync **27**

Downloading settings from the bodypack 28

Sending settings to the bodypack 28

Creating Custom Groups **28**

MixMode **28**

LOOP Applications **29**

MixMode for Multiple Systems 29

Floor Monitors 29

Recording Devices 29

Squelch **29**

Squelch Settings 30

Point-to-Point Wireless Audio **30**

Ethernet Connection **30**

Accessing the Network with a Computer 31

Static IP Addressing 31

Connecting Transmitters 31

Spectrum Scan **32**

Scanning and Deploying Frequencies 32

Viewing Spectrum Data 32

Updating Receiver Firmware **33**

Specifications **33**

Furnished Accessories **37**

Optional Accessories **37**

Frequency Range and Transmitter Output Power **38**

Certifications **39**

P10R+ 39

P10T 39

PSM1000
Wireless Personal Monitor System

IMPORTANT SAFETY INSTRUCTIONS

1. READ these instructions.
2. KEEP these instructions.
3. HEED all warnings.
4. FOLLOW all instructions.
5. DO NOT use this apparatus near water.
6. CLEAN ONLY with dry cloth.
7. DO NOT block any ventilation openings. Allow sufficient distances for adequate ventilation and install in accordance with the manufacturer's instructions.
8. DO NOT install near any heat sources such as open flames, radiators, heat registers, stoves, or other apparatus (including amplifiers) that produce heat. Do not place any open flame sources on the product.
9. DO NOT defeat the safety purpose of the polarized or grounding type plug. A polarized plug has two blades with one wider than the other. A grounding type plug has two blades and a third grounding prong. The wider blade or the third prong are provided for your safety. If the provided plug does not fit into your outlet, consult an electrician for replacement of the obsolete outlet.
10. PROTECT the power cord from being walked on or pinched, particularly at plugs, convenience receptacles, and the point where they exit from the apparatus.
11. ONLY USE attachments/accessories specified by the manufacturer.
12. USE only with a cart, stand, tripod, bracket, or table specified by the manufacturer, or sold with the apparatus. When a cart is used, use caution when moving the cart/apparatus combination to avoid injury from tip-over.

13. UNPLUG this apparatus during lightning storms or when unused for long periods of time.
14. REFER all servicing to qualified service personnel. Servicing is required when the apparatus has been damaged in any way, such as power supply cord or plug is damaged, liquid has been spilled or objects have fallen into the apparatus, the apparatus has been exposed to rain or moisture, does not operate normally, or has been dropped.
15. DO NOT expose the apparatus to dripping and splashing. DO NOT put objects filled with liquids, such as vases, on the apparatus.
16. The MAINS plug or an appliance coupler shall remain readily operable.
17. The airborne noise of the Apparatus does not exceed 70dB (A).
18. Apparatus with CLASS I construction shall be connected to a MAINS socket outlet with a protective earthing connection.
19. To reduce the risk of fire or electric shock, do not expose this apparatus to rain or moisture.
20. Do not attempt to modify this product. Doing so could result in personal injury and/or product failure.
21. Operate this product within its specified operating temperature range.

SAFETY PRECAUTIONS

The possible results of incorrect use are marked by one of the two symbols—"WARNING" and "CAUTION"—depending on the imminence of the danger and the severity of the damage.

⚠	WARNING: Ignoring these warnings may cause severe injury or death as a result of incorrect operation.
⚠	CAUTION: Ignoring these cautions may cause moderate injury or property damage as a result of incorrect operation.

CAUTION

- Never disassemble or modify the device, as failures may result.
- Do not subject to extreme force and do not pull on the cable or failures may result.
- Keep the product dry and avoid exposure to extreme temperatures and humidity.

WARNING

- If water or other foreign objects enter the inside of the device, fire or electric shock may result.
- Do not attempt to modify this product. Doing so could result in personal injury and/or product failure.

WARNING: Battery packs shall not be exposed to excessive heat such as sunshine, fire, or the like.

This device is able to produce sound volume higher than 85 dB SPL. Please check your maximum allowed continuous noise exposure level based on your national employment protection requirements.

WARNING

LISTENING TO AUDIO AT EXCESSIVE VOLUMES CAN CAUSE PERMANENT HEARING DAMAGE. USE AS LOW A VOLUME AS POSSIBLE. Over exposure to excessive sound levels can damage your ears resulting in permanent noise-induced hearing loss (NIHL). Please use the following guidelines established by the Occupational Safety Health Administration (OSHA) on maximum time exposure to sound pressure levels before hearing damage occurs.

90 dB SPL **at 8 hours**	**95 dB SPL** at 4 hours	**100 dB SPL** at 2 hours	**105 dB SPL** at 1 hour
110 dB SPL **at ½ hour**	**115 dB SPL** at 15 minutes	**120 dB SPL** Avoid or damage may occur	

HEARING PRECAUTIONS

	To prevent possible hearing damage, do not listen at high volume levels for long periods.

Australia Warning for Wireless

This device operates under an ACMA class licence and must comply with all the conditions of that licence including operating frequencies. Before 31 December 2014, this device will comply if it is operated in the 520-820 MHz frequency band.
WARNING: After 31 December 2014, in order to comply, this device must not be operated in the 694-820 MHz band.

低功率電波輻射性電機管理辦法

第十二條

經型式認證合格之低功率射頻電機，非經許可，公司、商號或使用者均不得擅自變更頻率、加大功率或變更原設計之特性及功能。 第十四條

低功率射頻電機之使用不得影響飛航安全及干擾合法通信；經發現有干擾現象時，應立即停用，並改善至無干擾時方得繼續使用。前項合法通信，指依電信法規定作業之無線電通信。低功率射頻電機須忍受合法通信或工業、科學及醫療用電波輻射性電機設備之干擾。

Australia Warning for Wireless

This device operates under an ACMA class licence and must comply with all the conditions of that licence including operating frequencies. Before 31 December 2014, this device will comply if it is operated in the 520-820 MHz frequency band.
WARNING: After 31 December 2014, in order to comply, this device must not be operated in the 694-820 MHz band.

Switzerland Warning for Wireless

WARNING: As of January 01, 2019 the use of radio transmitters in the bands 694 - 823 MHz is prohibited.

LICENSING INFORMATION

Licensing: A ministerial license to operate this equipment may be required in certain areas. Consult your national authority for possible requirements. Changes or modifications not expressly approved by Shure Incorporated could void your authority to operate the equipment. Licensing of Shure wireless microphone equipment is the user's responsibility, and licensability depends on the user's classification and application, and on the selected frequency. Shure strongly urges the user to contact the appropriate telecommunications authority concerning proper licensing, and before choosing and ordering frequencies.

Information to the user

This device complies with part 15 of the FCC Rules. Operation is subject to the following two conditions:

1. This device may not cause harmful interference.
2. This device must accept any interference received, including interference that may cause undesired operation.

Note: This equipment has been tested and found to comply with the limits for a Class B digital device, pursuant to part 15 of the FCC Rules. These limits are designed to provide reasonable protection against harmful interference in a residential installation. This equipment generates uses and can radiate radio frequency energy and, if not installed and used in accordance with the instructions, may cause harmful interference to radio communications. However, there is no guarantee that interference will not occur in a particular installation. If this equipment does cause harmful interference to radio or television reception, which can be determined by turning the equipment off and on, the user is encouraged to try to correct the interference by one or more of the following measures:

- Reorient or relocate the receiving antenna.
- Increase the separation between the equipment and the receiver.
- Connect the equipment to an outlet on a circuit different from that to which the receiver is connected.

- Consult the dealer or an experienced radio/TV technician for help.

This device contains licence-exempt transmitter(s)/receiver(s) that comply with Innovation, Science and Economic Development Canada's licence-exempt RSS(s). Operation is subject to the following two conditions:

1. This device may not cause interference.
2. This device must accept any interference, including interference that may cause undesired operation of the device.

L'émetteur/récepteur exempt de licence contenu dans le présent appareil est conforme aux CNR d'Innovation, Sciences et Développement économique Canada applicables aux appareils radio exempts de licence. L'exploitation est autorisée aux deux conditions suivantes :

1. L'appareil ne doit pas produire de brouillage;
2. L'appareil doit accepter tout brouillage radioélectrique subi, même si le brouillage est susceptible d'en compromettre le fonctionnement.

Industry Canada ICES-003 Compliance Label: CAN ICES-3 (B)/NMB-3(B)

Note: *EMC conformance testing is based on the use of supplied and recommended cable types. The use of other cable types may degrade EMC performance.*

Changes or modifications not expressly approved by the manufacturer could void the user's authority to operate the equipment.

PSM 1000

The PSM® 1000 Personal Monitor System from Shure brings personal monitoring to its most advanced level yet. The full-rack, dual-channel, networkable transmitter is ideally suited for the demands of professional touring and installation applications, and the diversity bodypack receivers deliver pristine RF signal and audio quality. Networkability over Ethernet connection enables remote control of transmitter functions and comprehensive frequency coordination via Wireless Workbench® software.

Features

Touring-Grade Design and Performance

- Twin-antenna diversity bodypack receivers with advanced digital signal processing technology dramatically improve signal reception and increase range.
- Full-rack, dual-channel wireless transmitter in an all-metal chassis provides touring-grade performance.
- Networked control via Ethernet connection vastly simplifies setup for high channel counts and enables remote control via Wireless Workbench software.
- Internal power supply with IEC in/out ports enables easy power chaining in the rack.
- Patented CueMode technology allows monitoring of different stage mixes and storing of up to 20 separate channels on one bodypack for quick and easy reference.
- MixMode® technology enables the bodypack user to combine two separate audio channels for simultaneous listening in both ears, or transmit two independent IFB program feeds. Balance control on the bodypack adjusts the relative levels for each audio signal.
- Compatibility with PSM 900 receivers (in the same frequency range) facilitates streamlined inventory management for rental and touring needs.

Robust RF Performance and Networked Control

- Up to 80 MHz tuning bandwidth provides flexibility in today's crowded and unpredictable RF environments.
- Exceptional transmitter linearity vastly reduces frequency intermodulation and allows up to 39 compatible channels per frequency range.
- Precision front-end RF filtering significantly reduces RF interference for a cleaner, stronger RF signal, fewer dropouts, and fewer audible artifacts.
- Automatic RF gain control prevents signal distortion due to RF overload before it can affect performance.
- Networked frequency coordination simplifies setup for high channel counts.
  - Full bandwidth scan from the P10R+ bodypack receivers finds clean, compatible frequencies and provides a graphic spectrum plot viewable from the bodypack menu screen.
  - IR sync enables the user to send the identified frequencies and spectrum plot to the P10T transmitter directly.
  - Ethernet connectivity allows the user to program compatible frequency assignments from one transmitter to every other P10T transmitter on the network for vastly simplified and streamlined setup.
  - Spectrum display provides a front-panel spectrum plot with selectable zoom.

Advanced Setup and Operation

Full compatibility with Wireless Workbench and ShurePlus™ Channels software provides advanced RF spectrum plotting, comprehensive frequency coordination, and live monitoring and adjustment of transmitter settings, including:

- RF mute enable/disable
- RF output power adjustments
- Aux/line level
- Audio input level
- Channel/device name edit

Exceptional Audio Quality

- Advanced digital signal processing technology in the P10R+ receivers deliver more headroom, improved stereo separation, and higher audio fidelity.
- Patented Audio Reference Companding offers natural and transparent sound.
- Available with Shure SE425 Sound Isolating™ earphones featuring dual high-definition MicroDrivers for accurate and balanced audio response.

Advanced Rechargeability Options

- The SB900 lithium-ion rechargeable battery provides extended usage times and precise tracking of remaining life and charge cycle details.
- The SCB800-US eight-bay charger brings up to eight SB900 batteries to full charge within two hours and has charge status LEDs for each battery.
- The SBC200 dual-docking charger works with SB900A, PSM 300 (P3RA only), PSM 900 (P9RA and P9RA+ only), PSM 1000 (P10R and P10R+ only), QLX-D® Digital Wireless Systems, ULX-D® Digital Wireless Systems, and Axient® Digital (AD1 and AD2 only), available with and without power supply.
- The SBC220 networked dual-docking charger works with SB900A, PSM 900 (P9RA+ only), PSM 1000 (P10R+ only), QLX-D Digital Wireless Systems, ULX-D Digital Wireless Systems, and Axient Digital (AD1 and AD2 only), available with and without power supply. When the SBC220 is connected to a network, the battery information for each transmitter can be viewed remotely.

Components

- P10T Rackmount Transmitter
- P10R+ Bodypack Receiver (2)
- Two 1/2 Wave Antennas
- AA Batteries (4)
- Antenna Cables (2)
- IEC Power Cable and IEC Extension Cable
- Ethernet Network Cable
- Zippered Bag

Rackmount supplies:

- 2 antenna hole plugs
- 4 rack mounting screws with washers

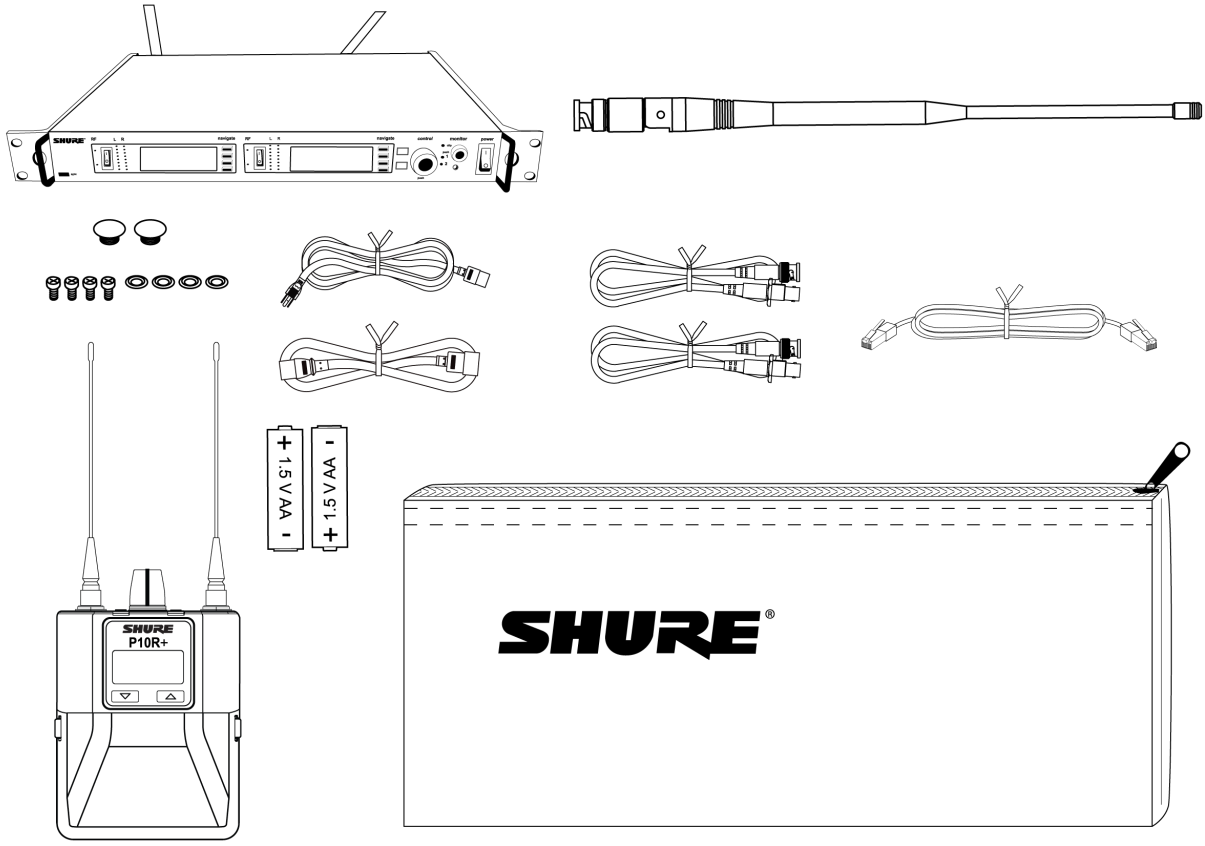

Quickstart Instructions

Rack Mount Transmitter

1. Connect to a power outlet using the supplied power cable.
2. Attach the supplied antennas to the *antenna out* BNC connectors.

3. Connect the audio source, such as the output of a mixer, to the audio inputs. You can use both input jacks or choose either one for a mono source.
4. Switch RF off and power on.
5. For mono (one input), access the *Audio* menu and select *Mono*.

   Set the input sensitivity to match the source using the `Util` > `Audio` > `INPUT` setting.

6. Adjust the audio source level so that, for the average input signal level, the top two yellow LEDs flicker and the lower LEDs are solid. If the red clip LED illuminates and a warning appears on the LCD, the inputs are overdriven. Decrease the audio input level to *+4 dBu* from the *Audio* menu. If the signal level is too low, change the input sensitivity to *–10 dBV*

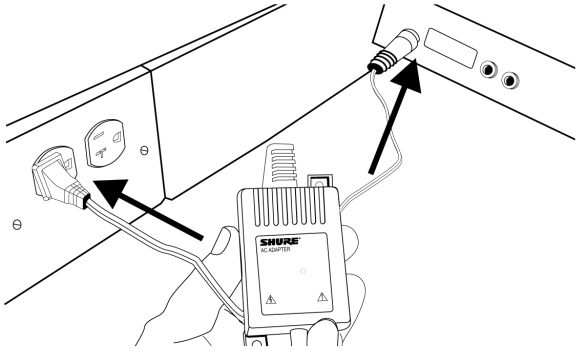

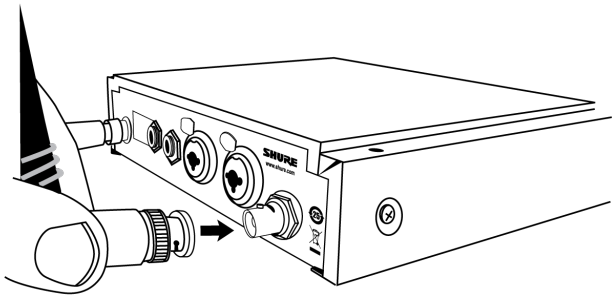

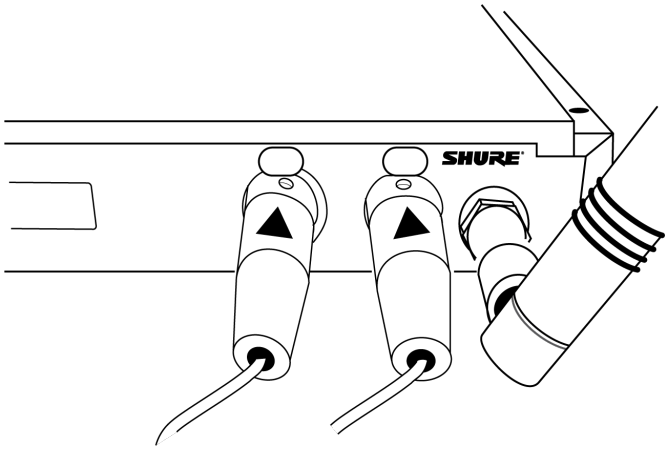

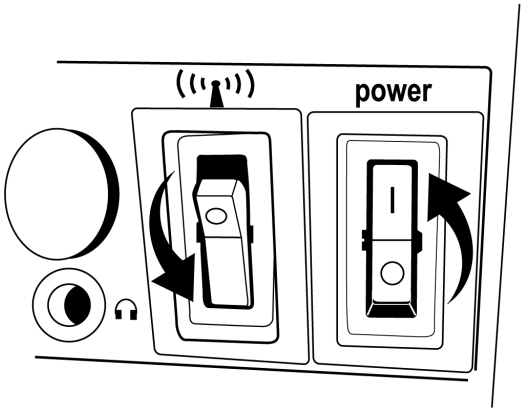

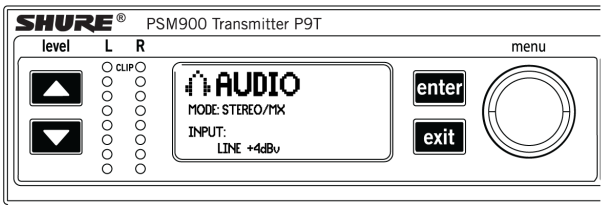

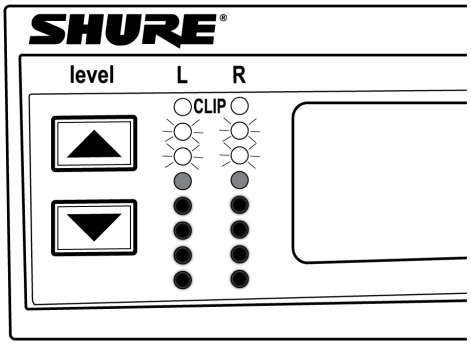

Bodypack

Open by pressing the latches on both sides and pulling. Insert the batteries or battery pack and attach antennas. Turn on using the volume knob. The battery light illuminates.

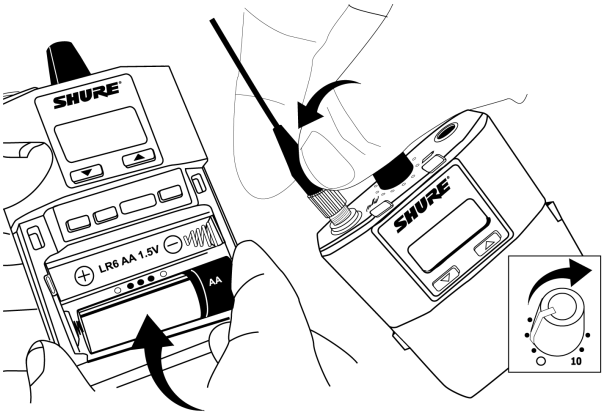

Scan and Sync

1. On the bodypack, press the *scan* button. The display flashes *SYNC NOW...*.
2. Align the IR windows on the bodypack and rack unit, the IR window on the transmitter illuminates. Press the *sync* button on the transmitter. The rack unit *Level* LEDs flash, and the screen displays *SYNC SUCCESS*.
3. Turn the RF switch on. The blue RF LED illuminates on the bodypack to indicate that it is detecting the transmitter. The bodypack also displays the RF signal strength (RF).
4. **Important:** Turn bodypack volume down before plugging in earphones.
5. Insert the earphones and slowly turn up the volume.

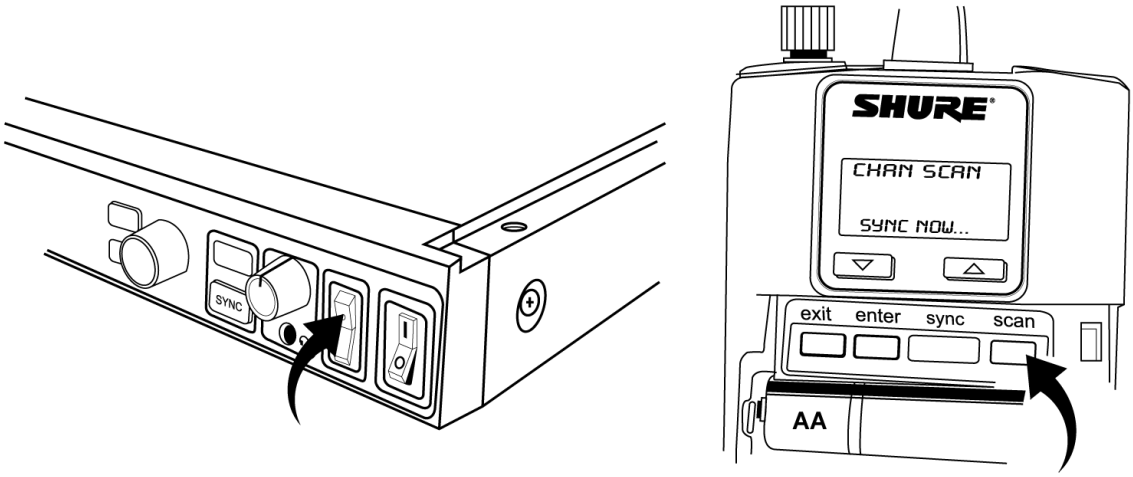
SYNC
SHURE
CHAN SCAN
SYNC NOW...
exit
enter
sync
scan
AA

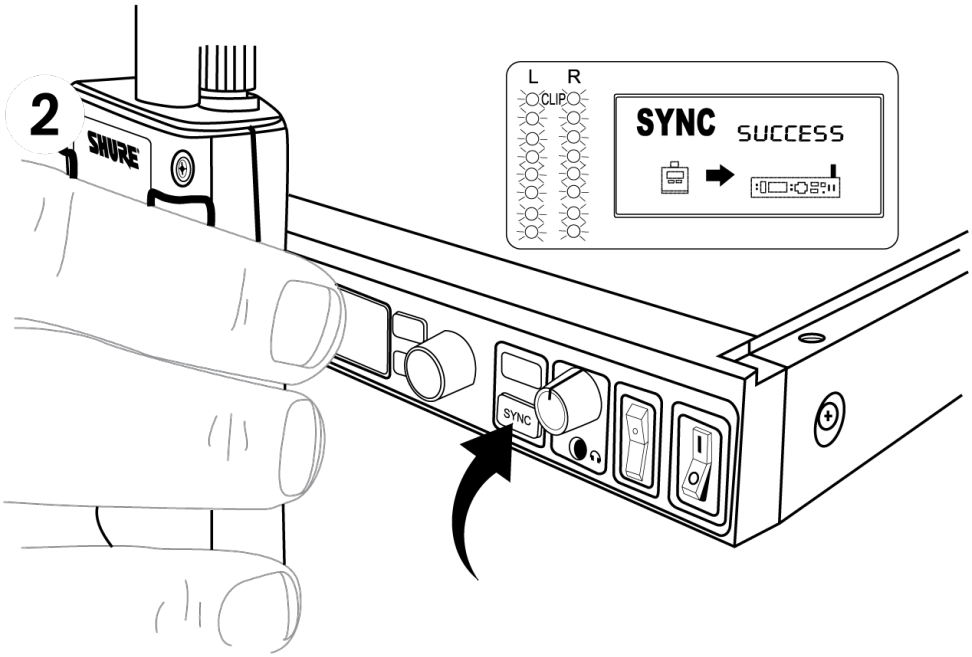
2
SHURE
L
R
CLIP
SYNC
SUCCESS
SYNC

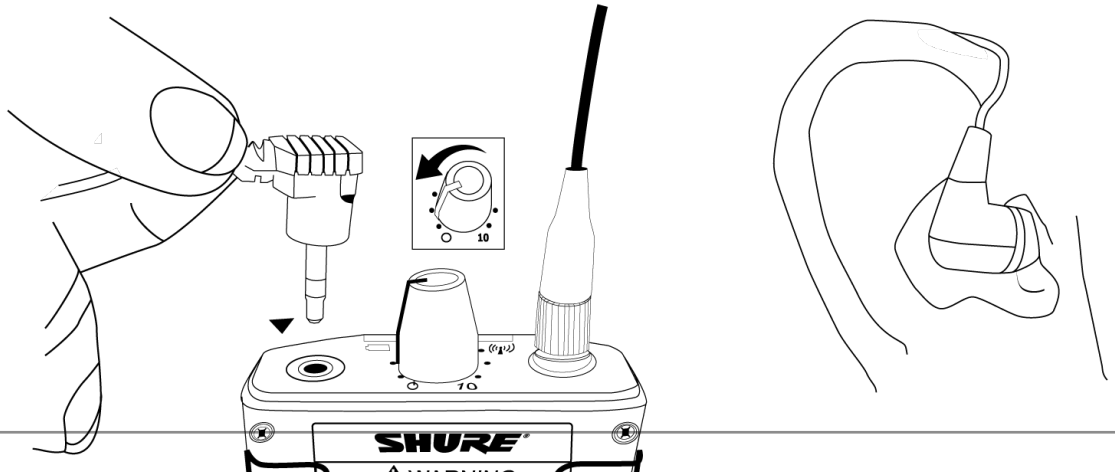
10
SHURE

Important: *Remove the protective film from the face of the transmitter or the IR sync may not work.*

Front Panel Controls

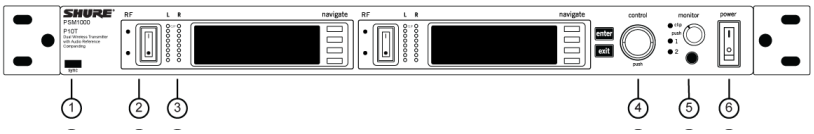

① Sync Window

Align bodypack IR window with sync window on TX.

② RF Switch

Mutes RF output. For setting up multiple systems or adjusting settings without transmitting unwanted RF or audio signals.

③ Audio Indicators

Use the control wheel to adjust the audio so that, for the average input signal level, the top two yellow LEDs flicker and the lower LEDs are solid. Press the *enter* button to save the value, *exit* to cancel. The red clip LED indicates the inputs are overdriven. Reduce the level at the audio source or change the input sensitivity of the rack unit from the `Audio` > `Input` menu.

④ Status Display and Controls

Use the navigation buttons to access the configuration menu. Push the control wheel to move the cursor to the next item. Turn the control wheel to change a parameter—the *enter* button flashes. Press it to save the value. Press the *exit* button to cancel changes and return to the previous menu.

⑤ Headphone Monitoring

The monitor control adjusts signal output to the 3.5 mm headphone jack. Push button to toggle between transmitters. Monitor clip LED indicates headphone audio is clipping.

⑥ Power Switch

Turns the unit on and off.

Rear Panel

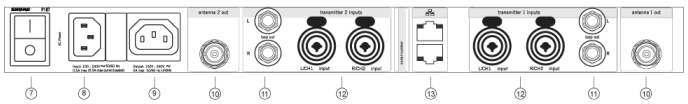

⑦ Primary power switch

This switch disconnects power to the unit. It is not affected by the interface power lock in the *Util* menu. Only the front power switch can be locked.

⑧ Power plug

AC mains power input, IEC Connector 100-240 Vac.

⑨ AC mains power passthrough

Use with an IEC extension cable to supply AC power to another device. Unswitched.

⑩ Antenna (BNC) port

Attach supplied antennas. If you are rack mounting, use a front panel or remote mounting kit from Shure.

⑪ *loop out*

Sends audio signal going into the transmitter to another device.

⑫ Audio Inputs

Connect to balanced or unbalanced outputs. Use either jack for mono input. Accepts male XLR or 6.35 mm (1/4-inch) TRS plugs.

⑬ Ethernet Jack

Two-port RJ-45 Ethernet jack for connection to a network or computer.

Transmitter Menu Structure and Navigation

Home Screen

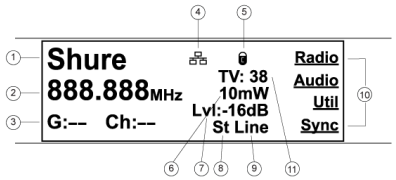

The home screen provides access to submenus and displays a summary of transmitter settings.

① Audio channel name
② Frequency setting
③ Group and Channel
④ Network Icon
⑤ Lock Icon
⑥ RF Power Level
⑦ Audio Level
⑧ Mix-mono or stereo
⑨ Aux/Line in
⑩ Submenus
⑪ TV Channel

Radio Frequency (RF) Settings

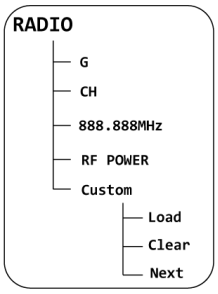

Access the *Radio* menu to adjust the frequency and power at which the unit operates.

G

Group number. Each group contains channels selected to work well together in a single installation.

Ch

Channel number. Sets the transmitter to a channel in the selected group.

888.888 MHz

Displays the frequency to which the transmitter is set. Frequency selection; adjustable in increments of 1MHz or 25kHz.

PWR

Power level at which the transmitter operates. Select from 10, 50, or 100 mW (power levels vary by region).

Custom

For creating custom frequency groups. See *Custom Groups*.

Audio Settings

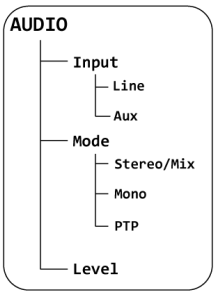

Access the following settings from the *Audio* menu.

Input Level (*Input*)

This changes the audio level for the inputs on the back of the rack transmitter.

Line

+4 dBu (line level)

Aux

–10 dBV (aux level)

Audio Mode (*Mode*)

Stereo/MX

Transmits each input as a separate channel.

Mono

Combines both inputs into a single channel.

PTP

Set up the device for point-to-point wireless audio.

Output Level (*Level*)

Adjust output level.

Receiver Synchronization Menu (*Sync*)

Transferring Settings to the Bodypack During Sync (*RxSetup*)

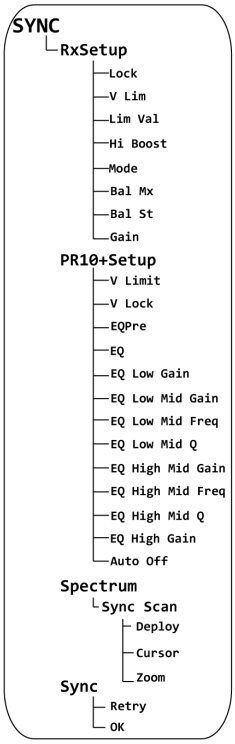

Use this feature to store settings that will be transferred to the bodypack during a sync. By default, settings are unaffected by a sync, indicated by the *NoChange* option.

Lock

ON: Locks the bodypack interface.

Off: Unlocks the bodypack interface.

Mode

Sets stereo (*ST*) or MixMode (*MX*).

Bal Mx

Sets balance for MixMode.

Bal St

Sets balance for stereo mode.

Gain

Switches between *Standard* and *High* gain modes.

The following settings are only available on legacy P9RA and P10R bodypack receivers. P9RA+ and P10R+ receivers will not be affected by these settings.

V Lim

Off: Turn volume limit off.

ON: Turn volume limit on.

Lim Val

Sets value for volume limit.

HiBoost

Sets value for high frequency boost.

Assign Audio Settings Using IR Sync (P10R+Setup)

Use these options to assign audio settings to P10R+ bodypack receivers during an IR sync. Legacy P10R receivers will not be affected by these settings.

For additional information, see the Audio Settings section of this guide.

Downloading and Viewing Spectrum Scan Data (*Spectrum*)

Align the receiver and transmitter IR ports and press *SyncScan* to download spectrum scan data from the receiver.

After downloading data, the following options are available:

Deploy

Enters a submenu from which you can deploy open frequencies to all transmitters on the network.

Cursor

Enables the control wheel to move the cursor.

Zoom

Enables the control wheel to zoom into graphic at cursor position.

Tip: *Push the control wheel to toggle between cursor and zoom modes.*

Sync

Press to sync the receiver and transmitter using the IR port.

Utility Settings

Channel Name

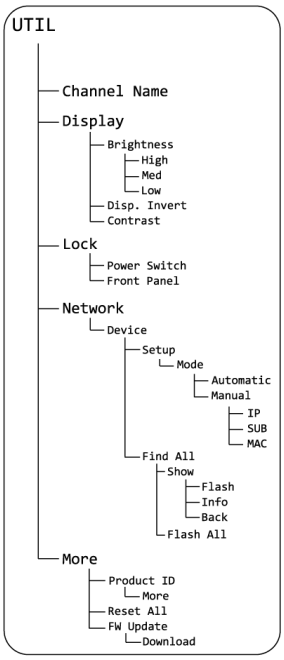

Util > *Channel Name*

Turn control wheel to change channel name. You can set a different name for each channel on the device (this name is uploaded to the bodypack with sync).

Display Settings

Util > *Display*

Change the look of the LCD panel from the display menu.

Brightness

Sets display brightness to high, low, or medium.

Disp. Invert

Changes display from light on dark to dark on light.

Contrast

Use the control wheel to adjust contrast.

Interface Locks

Use these controls to lock or unlock power switch and front panel controls.

Power Switch

`Util` > `Lock` > `Power Switch`

Locked

Locks power switch.

Off

Unlocks power switch.

Front Panel

`Util` > `Lock` > `Front Panel`

Locked

Locks the controls on the front panel for the selected transmitter.

Off

The front panel is unlocked.

Unlocking Front Panel

To unlock the front panel, select `Util` > `Unlock`

Network Setup

Use this menu to find, display and change how this device connects to the network. There is one set of network settings for both transmitters.

Device Identification (*Device*)

Allows you to assign a display name. This applies to both channels on the device. To name each channel individually, use the *Channel Name* setting.

Setup (*Mode*)

Automatic

Default setting for use with DHCP networks.

Manual

Manual IP addressing. Allows you to enter an IP address (*IP*) and subnet mask (*SUB*).

MAC

Displays MAC address for this device, view only, and there is only one MAC address for both transmitters.

Reset

Manual mode only. Resets network settings to the factory defaults.

Find All Network Devices (*Find All*)

Lists all network devices.

- Scroll to any of the listed devices and press *Show Info* to view information about that device.
- Press *Flash* to flash the LEDS of all devices on network
- Press *Back* to return to previous screen

Additional Settings (*More*)

Product ID

Displays product serial number.

Reset All

Restores the values on all networked devices to factory default settings.

FW Update

Displays the receiver firmware version that is currently stored in the transmitter. Press *Download* to transfer the update to a receiver through the IR port.

Bodypack Receiver

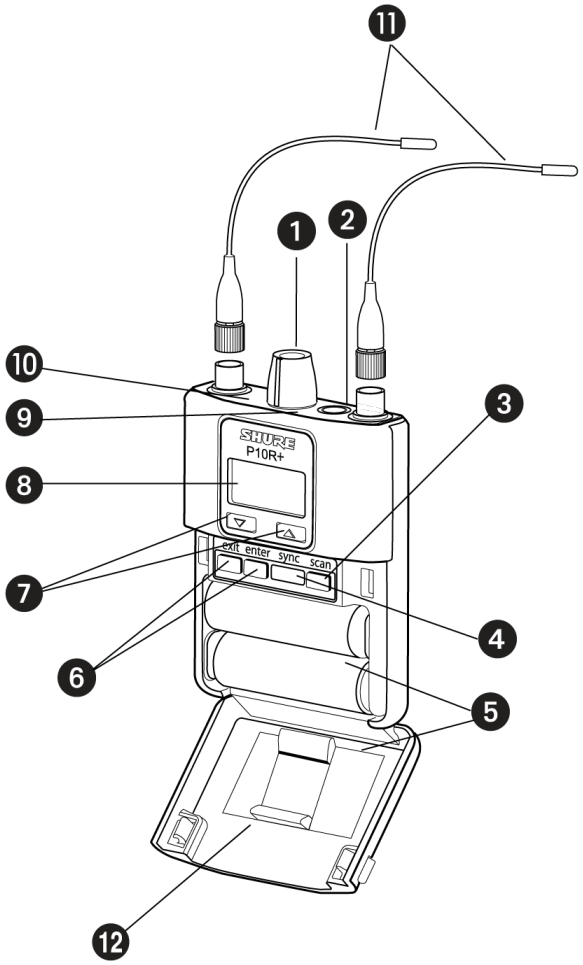

① Power Switch and Volume Control

Turns the bodypack on and off and adjusts earphone volume.

② 3.5 mm Earphone Jack

Insert earphones here.

③ Scan Button

Press the scan button to find an available frequency. Press and hold for two seconds to find the group with the most available channels.

④ IR Window

For transmitting settings between bodypack and rack unit.

⑤ Battery Compartment

Requires 2 AA batteries or Shure rechargeable battery. Open by pressing the latches on both sides and pulling.

⑥ Menu buttons

Use in conjunction with the ▼ ▲ buttons to access the configuration menus.

⑦ ▼ ▲ Buttons

Use to adjust the audio mix (in MixMode only), or in conjunction with the menu buttons to change settings.

⑧ LCD Screen

Displays current settings and menus.

⑨ Tri-Color Battery LED

Illuminates green, amber, or red to indicate battery power. When red, change battery immediately.

⑩ Blue RF LED

Indicates the bodypack is receiving a signal from the transmitter.

⑪ SMA Connector

For detachable antennas.

⑫ Removable AA Adapter

Remove to use with a Shure SB900 rechargeable battery.

Note: *To remove adapter, open door and slide out. To reinstall adapter, place over the clip and press, there will be an audible click when seated.*

RF Settings

Access the following RF settings from the *RADIO* menu.

G

Group number. Each group contains channels selected to work well together in a single installation.

CH

Channel number. Sets the receiver to a channel in the selected group.

888.888 MHz

Displays the frequency to which the transmitter is set. Highlight and use the ▼ ▲ buttons to set the transmitter to a specific frequency.

SQUELCH

Adjusts the squelch setting.

FULL SCAN

Performs spectrum scan and displays open frequencies in a graphical interface.

RF PAD

Attenuates antenna signals in 3 dB increments.

ANTENNA

Selection for single antenna operation. Disables diversity reception.

Audio Settings

Access the following audio settings from the *Audio* menu.

Output Mode (*MODE*)

STEREO

Receive left and right inputs as a stereo signal

MIXMODE®

Set your receiver to combine the left and right channel for simultaneous listening in both ears or pan to listen to only the left or right channel

Four-Band Parametric Equalizer (*EQ*)

The parametric equalizer is divided into four frequency bands: *LOW*, *LOW MID*, *HIGH MID*, and *HIGH*. When the *EQ* is enabled, the following parameters are adjustable:

FREQUENCY

Select the center frequency of the band to boost/cut

Q

Adjusts the width and slope of the frequency band (measured in octaves)

GAIN

Adjustable in 2 dB increments from -6 dB (cut) to +6 dB (boost)

NOTE: *HIGH and LOW are shelf filters, and therefore do not have adjustable Q widths. The HIGH shelf is fixed at 10 kHz; the LOW shelf is fixed at 100 Hz.*

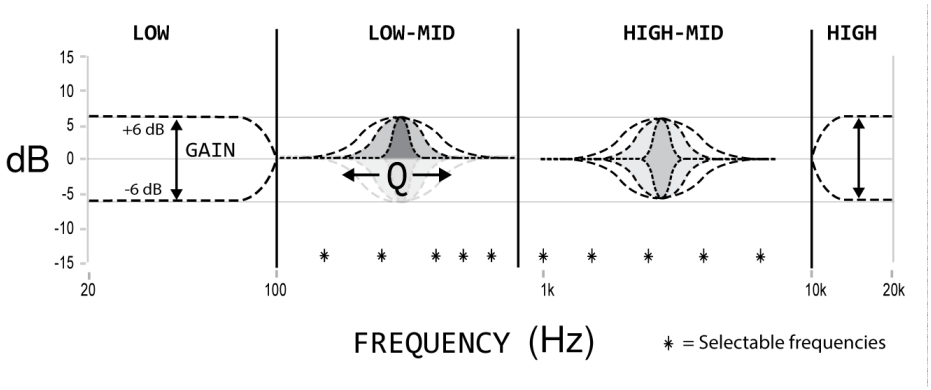

Volume Limiter (*VLIM*)

VLIM

Set a value (*OFF* to *-48 dB*, adjustable in 3 dB increments) to attenuate the highest possible volume level. Turning the volume knob through its entire range of motion still affects volume; the limit simply narrows the range of dB adjustment.

Note: *The volume limit does not compress the audio signal.*

Volume Lock (*VLOCK*)

P9RA+ and P10R+ only

ON

The volume is locked to the physical position of the volume knob

Input EQ Preset (*EQPre*)

Input EQ affects the signal after it is sent to the receiver, but before the headphone output, modifying the overall sound of the entire system.

***Match* (default)**

Matches the frequency response of legacy PSM receivers, allowing for matched audio with mixed-inventory setups

Flat

Offers a flat frequency response curve

Off

Audio bypasses input EQ

Balance (*BAL ST / BAL MIX*)

BAL ST / BAL MX

Balance

▼ ▲ Buttons

Left and right balance for earphones when in stereo mode, or mix of left and right channel for MixMode

Utilities and Display Settings

Access the following settings from the *UTILITIES* menu.

CUEMODE

Enters *CUEMODE* to exit, press *enter* and select *EXIT CUEMODE*

DISPLAY

Change the display settings on the bodypack

CONTRAST

Sets display brightness to high, low, or medium.

LOCK PANEL

Locks all controls except power and volume.To unlock, press *exit*, select *OFF*, and press *enter*.

BATTERY

When using an SB900 - Shure rechargeable battery, the following information is displayed: *Hrs: Min Left*, *temperature*, *Status*, *Cycle Count*, and *Health*.

AUTO OFF

Sets the time at which the receiver is powered off after entering power-save mode (when *POWER SAVE* is displayed on the screen).

RESTORE

Returns receiver to factory default settings.

Battery Life

Battery Indicator	Tri-Color Battery LED	Approximate Hours Remaining (h:mm)					
		Alkaline			Shure SB900A Rechargeable Battery		
		Volume Level			Volume Level		
		4	6	8	4	6	8
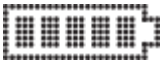	Green	6:00 to 3:50	4:20 to 2:45	3:15 to 2:05	8:00 to 3:45	6:45 to 3:45	6:00 to 3:45
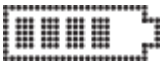	Green	3:50 to 2:50	2:45 to 2:00	2:05 to 1:30	3:45 to 2:45	3:45 to 2:45	3:45 to 2:45
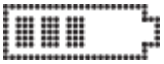	Green	2:50 to 1:15	2:00 to 1:00	1:30 to 0:50	2:45 to 1:45	2:45 to 1:45	2:45 to 1:45
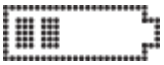	Green	1:15 to 0:25	1:00 to 0:20	0:50 to 0:20	1:50 to 0:55	1:50 to 0:55	1:50 to 0:55
	Amber	0:25 to 0:15	0:20 to 0:10	0:20 to 0:10	0:55 to 0:25	0:55 to 0:25	0:55 to 0:25
	Red	< 0:15	< 0:10	< 0:10	< 0:25	< 0:25	< 0:25
Total Battery Life		6:00	4:20	3:15	8:00	6:45	6:00

Power-save mode: When there are no earphones plugged in for 5 minutes, the receiver enters power-save mode to preserve battery life. The LED slowly fades on/off in this mode and continues to display the color that represents the remaining battery life.

Note: *Battery life using Energizer brand AA Alkaline batteries and the following conditions:*

- Receiver audio set to *V LIMIT = 0dB*
- Transmitter audio *INPUT* set to *Line+4 dBu* and *Level* set to −9 dB
- Audio input to the transmitter: pink noise at +8.7 dBV
- Audio output at receiver: 115 dB SPL in ear with SE425 earphones (impedance at 22 Ω) set at volume level 4.

Note: *Using lower-impedance earphones or ones with different sensitivity, different battery types, and higher gain settings in the PSM system may cause the receiver battery life to be different than specified.*

Pink noise is a signal with a frequency spectrum such that the power spectral density is inversely proportional to the frequency. In pink noise, each octave carries an equal amount of noise power.

Multiple System Setup

When setting up multiple systems, designate a single bodypack to scan for available frequencies and download them to all the rack units.

The bodypack must be from the same frequency band as all the transmitters.

1. Power on all the rack units. **Turn off the RF**. (This prevents them from interfering with the frequency scan.)

   Note: *Turn **on** all other wireless or digital devices as they would be during the performance or presentation (so the scan will detect and avoid any interferance they generate).*

2. Use the bodypack to **scan for a group** by pressing and holding the *scan* button for **two seconds**. The bodypack displays the group and the number of available channels, and flashes *SYNC NOW...*.

   Important: *Note the number of available channels. If you have more rack units than available channels, eliminate potential sources of interference and try again, or call Shure Applications for assistance.*

3. Sync the bodypack with the first rack unit by aligning the IR windows and pressing *sync*.
4. Press *scan* again on the bodypack to find the next available frequency.
5. Sync the bodypack with the next rack unit.
6. Repeat with all the rack units.
7. Sync each performer's bodypack to its respective rack unit by aligning the IR windows and pressing *snyc*. DO NOT press scan on the bodypacks.
8. Turn on the RF on all rack units. The systems are ready to use.

CueMode

CueMode allows you to upload the name and frequency settings from multiple rack units and store them as a list on a single bodypack. You can then, at any time, scroll through that list to hear the audio mix from each transmitter, just as each performer does during a show.

CueMode lists are retained even if CueMode is exited, the bodypack is turned off, or batteries are removed.

Note: *Set the channel frequency and assign display names for each transmitter **before** creating your CueMode list.*

Adding Transmitters to the CueMode List

Note: *The transmitter must be from the same frequency band as the bodypack.*

1. Open the battery door and press the *enter* button.
2. From the main menu, scroll to *UTILITIES* and press *enter*. Select *CueMode* and press *enter* again.
3. Align IR windows and press *sync* on the rack unit.

   The LCD displays *SYNC SUCCESS* after frequency and name data are uploaded to the CueMode list. It also displays the CueMode number for that transmitter and the total number of transmitters.

4. Repeat the above step for each transmitter.

Note: *Syncing while in CueMode does not change any of the settings on the bodypack.*

Auditioning Mixes

1. Enter CueMode from the *UTILITIES* menu.
2. Use the ▼▲ buttons to scroll through your CueMode list to hear the mixes.

Exiting CueMode

Exit CueMode by pressing *enter* and selecting *EXIT CUEMODE*.

Managing CueMode Mixes

While in Cue Mode, you can access the following menu by pressing *enter*:

REPLACE MIX

Select and press sync on a rack unit to upload new data for the current mix (for example, if you have changed the transmitter frequency).

DELETE MIX

Removes the selected mix.

DELETE ALL

Removes all mixes.

EXIT CUEMODE

Exits CueMode and returns the bodypack to the previous frequency setting.

Frequency Scan

Use a frequency scan to analyze the RF environment for interference and identify available frequencies. There are three types of scan:

- **Channel Scan** Press the scan button on the bodypack. Finds the first available channel.
- **Group Scan** Press and hold the scan button for two seconds. Finds the group with the greatest number of available channels. (Each group contains a set of frequencies that are compatible when operating multiple systems in the same environment.)
- **Full Scan** From the bodypack menu select *RADIO* > *FULL SCAN*. Press *RUN SCAN* to initiate a full scan. Press *SPECTRUM* to view full results in a graphical display.

Note: *When performing a frequency scan:*

- **Turn off** the RF on the transmitters for the systems you are setting up. (This prevents them from interfering with the frequency scan.)
- **Turn on** potential sources of interference such as other wireless systems or devices, computers, CD players, large LED panels, effects processors, and digital rack equipment so they are operating as they would be during the presentation or performance (so the scan will detect and avoid any interference they generate).

Sync

You can transfer frequency settings in either direction: from the bodypack to the rack unit, or from the rack unit to the bodypack.

Note: *You can also choose to transfer other settings to the bodypack during a sync, such as lock or mode settings, using the `Sync` > `RxSetup` menu on the rack transmitter.*

Downloading settings from the bodypack

1. Press the *scan*button on the bodypack.
2. Align the IR windows and press the *sync*button from the rack transmitter LCD menu while the bodypack display is flashing *"SYNC NOW..."*.

The level LEDs on the rack unit flash.

Sending settings to the bodypack

1. Press the *Sync* button on the rack transmitter to access the sync menu.
2. Align the IR windows.

   When properly aligned the IR window on the transmitter illuminates.

3. Press *Sync* to transfer settings.

   The blue LED on the bodypack flashes.

Creating Custom Groups

This feature allows you to create your own groups of frequencies.

Menu: `Radio` > `Custom`

1. Turn the Control wheel to select a custom group from the *Group* menu. (U1, U2, etc.)
2. Push the Control wheel to move to the Channel parameter and turn it to select a channel (01, 02, 03, etc.)
3. Push the Control wheel to move to the Freq parameter and select a frequency for that channel.
4. Push the *Next* menu key to select a frequency for the next channel in that group.
5. Select *Load* to find all other devices of the same model and band on the network. Then press *enter* to deploy the custom group list to all these devices.

   This overwrites all existing custom groups.

6. *Clear* deletes all custom groups for all devices on the network.

MixMode

Some performers need to hear more of their own voice or instrument, while others want to hear more of the band. With MixMode, the performer creates their own mix using the balance control (▼ ▲ buttons) on the bodypack.

To use MixMode, send a solo mix of the performer to the *L/CH1* input on the transmitter, and send a band mix to the *R/CH2* input.

Set the performer's bodypack for MixMode. The bodypack combines the two signals and sends them to both earphones, while the balance control on the bodypack adjusts the relative levels for each.

For IFB applications, send two independent program feeds into the *L/CH1* and *R/CH2* input of the transmitter. With MixMode, the director or broadcast talent can listen to either feed using the balance control (▼ ▲ buttons) on the bodypack to pan to either audio signal.

LOOP Applications

Use *LOOP OUT* L (left) and R (right) outputs to send a copy of the audio signal going into the transmitter to other devices. Following are a few of the many applications for these outputs.

Note: *The input level control and the input pad do not affect the LOOP OUT signals.*

MixMode for Multiple Systems

Configure each system for MixMode. From the mixing console, send a mix of the whole band to input 2 of the first transmitter. Connect the *LOOP OUT R* output to the *R/CH2* input of the next transmitter. Continue the chain with all the transmitters.

Next, create solo mixes for each performer. Send each mix to input 1 of the transmitter for that performer.

Floor Monitors

Send the audio from the LOOP outputs to onstage loudspeakers. The bodypack and the onstage monitors receive the same audio signals.

Note: The LOOP audio outputs will not drive passive loudpeakers, and must be sent to a power amplifier or an active loudspeaker.

Recording Devices

To record a performance, connect the LOOP outputs to the inputs of a recording device.

Squelch

Squelch mutes audio output from the bodypack when the RF signal become noisy. While squelch is activated, the blue LED on the bodypack turns off.

For most installations, squelch does not need adjustment, and it keeps the performer from hearing hiss or noise bursts if the RF signal becomes compromised. However, in congested RF environments or in close proximity to sources of RF interference (such as large LED video panels), the squelch may need to be lowered to prevent excessive audio dropouts. With lower squelch settings, the performer may hear more noise or hiss, but will experience fewer audio dropouts.

Important: *Before lowering squelch, first try to eliminate the problem by finding the best set of frequencies for your installation and removing potential sources of interference.*

Caution: Turning off or lowering the squelch setting can increase the noise level and cause discomfort to the performer:

- Do not lower the squelch setting unless absolutely necessary.
- Turn earphone volume to the lowest setting before adjusting squelch.
- Do not change the squelch setting during a performance.
- Turn up the transmitter *level* setting to make noise or hiss less noticeable.

Squelch Settings

HIGH (NORMAL)		Default factory setting.
MID		Moderately decreases the signal-to-noise ratio required to squelch the receiver.
LOW		Greatly decreases the noise squelch threshold.
PILOT ONLY*	⊘	Turns off noise squelch leaving only pilot squelch on.
NO SQUELCH*	⊗	Turns off noise and pilot tone squelch. (Sometimes used as a debugging tool by monitor engineers or RF coordinators to "listen" to the RF environment.)
*** Symbol appears in display window.**		

Point-to-Point Wireless Audio

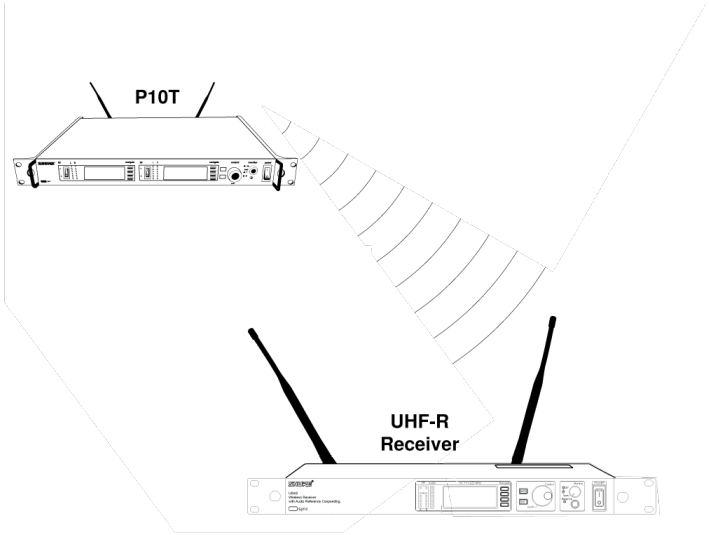

Use PTP mode to allow a P10T to transmit to a UHF-R receiver. This allows a transmitter and receiver setup where both units are racked and powered by AC.

For more information visit: www.shure.com/americas/products/personal-monitor-systems

Ethernet Connection

Each transmitter has an RJ-45 port on the back for connecting to other transmitters over an Ethernet network. Networking transmitters allows you to automatically set frequencies for all the transmitters with a single group scan command.

Add transmitters to a network using the default automatic network setting (`Util` > `Network` > `Mode` > `Automatic`):

1. Connect transmitters to an Ethernet router with DHCP service.
2. Use Ethernet switches to extend the network for larger installations.

3. Connect transmitters in series.

Accessing the Network with a Computer

You can control and monitor all networked transmitters through a computer running Shure Wireless Workbench software, Version 6 or later. If using the default automatic network setting, make sure your computer is configured for DHCP.

Note: *Some security software or firewall settings on your computer can prevent you from connecting to the transmitter. If using firewall software, allow connections on port 2201.*

Static IP Addressing

Static IP addressing is also supported. An IP address can be assigned through the network menu (`Util` > `Network` > `Mode` > `Manual`).

Note: *Dual transmitters use a single IP address, which may be set through either LCD interface.*

Connecting Transmitters

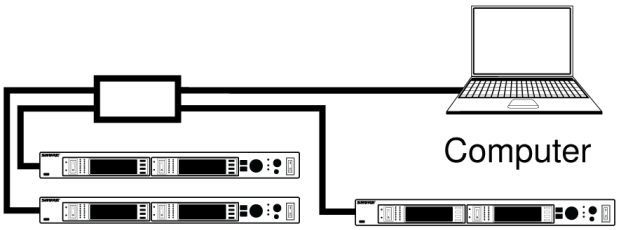

Router with DHCP

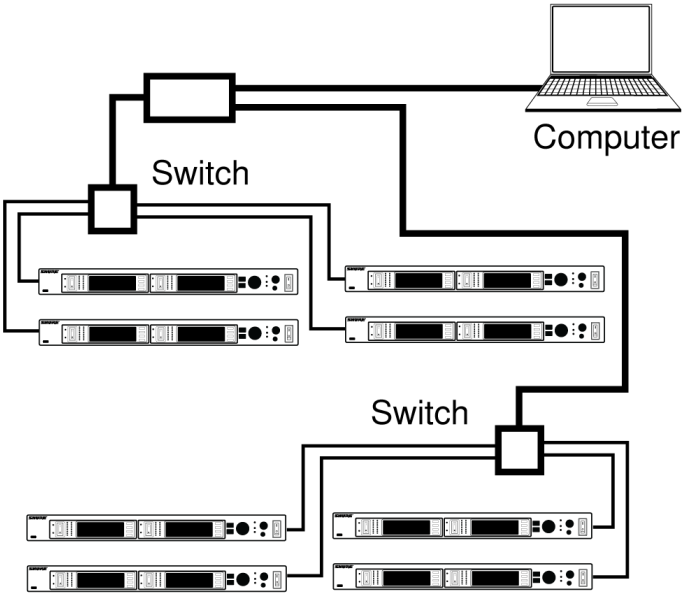

Extended Network

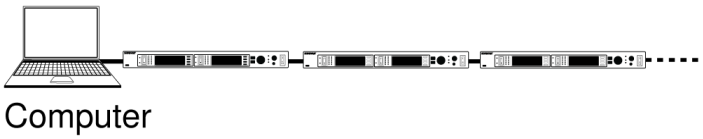

Direct Connection to Computer

Spectrum Scan

Use this feature to scan the full RF spectrum for potential sources of interference and deploy open frequencies to all receivers on the network. A graphical representation of the scan data may be viewed on both the transmitter and receiver. This allows you to scroll through the graph to reveal details about the frequency and strength of the interfering signals.

Scanning and Deploying Frequencies

1. Turn off RF on all receivers.
2. **Collect the scan data.** From the bodypack receiver *MAIN MENU*, select *RADIO* > *FULL SCAN* > *RUN SCAN*

   The receiver displays *SPECTRUM SCAN* and scans the full spectrum.

3. **Load the scan data from the bodypack receiver to the rack transmitter.** Align the IR windows and press *Sync* > *Spectrum* > *SyncScan*

   The receiver displays the scan data as a graph and gives options for viewing and deploying.

4. **Search network for devices.** From the rack transmitter *Sync* > *Spectrum* menu, press *Deploy*.

   The rack transmitter searches the network for all available transmitters.

5. **Choose a group.** Use the control wheel to select from the available groups.

   The number of open frequencies for each group is displayed next to *Open Frequencies*.

6. **Deploy frequencies.** Press the flashing *enter* button to deploy frequencies to all channels.

   The LEDs flash on all affected channels.

Viewing Spectrum Data

From the Bodypack Receiver

MAIN MENU > *RADIO* > *FULL SCAN* > *SPECTRUM*

- Adjust the cursor position using the ▼ ▲ keys.
- Press *enter* to zoom in at the cursor position. Press *exit* to zoom out.
- Press *scan* to display frequency and power of signal at the cursor position.

From the Rack Transmitter

Sync > *Spectrum*

- Adjust the cursor position by pressing *Cursor* and using the control wheel.

- Frequency and power of signal at the cursor position is displayed at the top of the screen.
- Press *Zoom* and use the control wheel to zoom in and out.

Updating Receiver Firmware

Use the following steps to update the firmware on a bodypack receiver.

1. Use the WWB update manager to download the receiver firmware to the rack transmitter.
2. On the transmitter, navigate to the `Util` > `More` > `FW Update` menu.
3. Align the receiver and transmitter IR ports and press *Download*. The download begins, which can take 50 seconds or longer.

Once the download is complete, the receiver automatically begins the firmware update, which overwrites the existing firmware.

CAUTION! Do **not** turn off the receiver until the update is complete.

Specifications

PSM 1000

RF Carrier Range

470–952 MHz

varies by region

Compatible Frequencies

Per band

39

Tuning Bandwidth

72–80 MHz

Note: varies by region

Operating Range

environment dependent

90 m (300 ft)

Audio Frequency Response

35 Hz –15 kHz (±1 dB)

Signal-To-Noise Ratio

A-Weighted

90 dB (typical)

Total Harmonic Distortion

ref. ±34 kHz deviation @1 kHz

<0.5% (typical)

Companding
Patented Shure Audio Reference Companding

Spurious Rejection
ref. 12dB SINAD

>80 dB (typical)

Frequency Stability
±2.5 ppm

MPX Pilot Tone
19 kHz (±0.3 kHz)

Modulation
FM*, MPX Stereo

*ref. ±34 kHz deviation @1 kHz

Operating Temperature
-18°C to +57°C

P10T

RF Output Power
selectable: 10, 50, 100 mW (+20 dBm)

RF Output Impedance
50 Ω (typical)

Net Weight
4.7 kg (10.4) lbs

Dimensions
44 x 483 x 343 mm (1.7 x 19.0 x 13.5 in.), H x W x D

Power Requirement

Input	100–240 V AC, 50/60 Hz, 0.5 A max. (5.5, with outlet loaded)
Output	100–240 V AC, 50/60 Hz, 5 A max., unswitched

Audio Input

Connector Type
Combination XLR and 6.35 mm (1/4") TRS

Polarity

XLR	Non-inverting (pin 2 positive with respect to pin 3)
6.35 mm (1/4") TRS	Tip positive with respect to ring

Configuration

Electronically balanced

Impedance

70.2 kΩ (actual)

Nominal Input Level

switchable: +4 dBu, –10 dBV

Maximum Input Level

+4 dBu	+29.2 dBu
-10 dBV	+12.2 dBu

Pin Assignments

XLR	1=ground, 2=hot, 3=cold
6.35 mm (1/4") TRS	Tip=hot, Ring=cold, Sleeve=ground

Phantom Power Protection

Up to 60 V DC

Audio Output

Connector Type

6.35 mm (1/4") TRS

Configuration

Electronically balanced

Impedance

Connected directly to inputs

P10R+

Tri-Band RF Filtering

–3 dB at 30.5 MHz from the center frequency of each band

Active RF Gain Control

31 dB

Adjusts RF sensitivity to provide more RF dynamic range

Active RF Sensitivity
at 20 dB SINAD

2.2 µV

Image Rejection
>90 dB

Adjacent Channel Rejection
>70 dB

Latency
0.37ms

Squelch Threshold
22 dB SINAD (±3 dB)

default setting

Intermodulation Attenuation
>70 dB

Blocking
>80 dB

Audio Output Power
1 kHz at Less than 1% distortion, Maximum Headphone Output Power, at 16 Ω

100 mW (per output)

Minimum Load Impedance
4 Ω

Output Impedance
<1 Ω

4-band Parametric EQ

Low Shelf	Selectable Gain: ±2 dB, ±4 dB, ±6 dB @ 100 Hz
Low Mid	Selectable Gain: ±2 dB, ±4 dB, ±6 dB at 160 Hz, 250 Hz, 400 Hz, 500 Hz, 630 Hz Selectable Q: 0.7, 1.4, 2.9, 5.0, 11.5
High Mid	Selectable Gain: ±2 dB, ±4 dB, ±6 dB at 1 kHz, 1.6 kHz, 2. 5 kHz, 4 kHz, 6.3 kHz Selectable Q: 0.7, 1.4, 2.9, 5.0, 11.5
High Shelf	Selectable Gain: ±2 dB, ±4 dB, ±6 dB @ 10 kHz

Volume Limiter
Selectable: OFF (0 dB)to -48 dB in 3 dB steps

Volume Lock
Selectable: 0 dB to -70 dB

Limits volume adjustment knob. Selected value analogous to volume knob increment.

Net Weight

158 g (Without Battery)

Dimensions

99 x 66 x 23 mm (3.9 in. x 2.6 in. x 0.9 in.) H x W x D

Battery Life

4–6 hours (continuous use) AA batteries

Furnished Accessories

Omnidirectional Whip Antenna, Yellow Tip (470-542 MHz)	UA700
Omnidirectional Whip Antenna, Gray Tip (540-626 MHz)	UA710
Omnidirectional Whip Antenna, Black Tip (596-692 MHz)	UA720
Omnidirectional Whip Antenna, Blue Tip (670-830 MHz)	UA730
Omnidirectional Whip Antenna, Red Tip (830-952 MHz)	UA740
1/2 Wave Omnidirectional Receiver Antenna for improved wireless signal reception	UA8
Antenna extension cables (2)	95B9023
Carrying/Storage Bag	95A2313
Hardware Kit (Rack mounting Screws)Hardware kit	90XN1371
Bumper Kit	90B8977
AA battery adapter	65A15224

Optional Accessories

Passive Directional Antenna 470-952 MHz. Includes 10 foot BNC to BNC cable.	PA805SWB
PWS Helical Antenna, 480-900 MHz	HA-8089
PWS Domed Helical Antenna, 480-900 MHz	HA-8091
Wideband Omnidirectional Antenna (470-1100 MHz)	UA860SWB
2 ft. BNC-BNC Coaxial Cable	UA802
6 foot (1.8m) BNC to BNC Coaxial Cable for Remote Antenna Mounting for ULX Wireless System	UA806

25 ft. BNC-BNC Coaxial Cable	UA825
50 ft. BNC-BNC Coaxial Cable	UA850
100 ft. BNC-BNC Coaxial Cable	UA8100
4-to-1 antenna comber with power distribution to 4 transmitters (better RF performance and eliminates need for external power supply)	PA421B
8-to-1 antenna combiner for better RF performance	PA821B
Coiled IFB Earphone Cable for Shure Earphones	EAC-IFB

Frequency Range and Transmitter Output Power

Band	Range	Output Power (mW)
G10	470-542	10/50/100
G10E	470-542	10/50/100
G10J	470-542	6/10
G11	479-542	10
G62	510-530	10
H8Z	518-582	10/50
H22	518-584	10**/50/100
J8	554-626	10/50/100
J8A	554-608	10/50/100
	614-616	10*
J8E	554-626	10/50/100
J8J	554-626	6/10
K10E	596-668	10/50/100
L8	626-698	10/50/100
L8A	653-657	10
	657-663	10*
L8E	626-698	10/50/100
L8J	626-698	6/10
L9E	670-742	10/50/100
L11J	670-714	6/10

Band	Range	Output Power (mW)
M19	694-703	10/50
P8	710-790	10/50/100
Q12	748-758	10/50
Q21	710-787	10/50/100
Q22E	750-822	10/50/100
R27	794-806	10/50
X1	944-952	10/50/100
X7	925-937.5	10

NOTE: *This Radio equipment is intended for use in musical professional entertainment and similar applications. This Radio apparatus may be capable of operating on some frequencies not authorized in your region. Please contact your national authority to obtain information on authorized frequencies and RF power levels for wireless microphone products.*

WARNING: As of January 01, 2019 the use of radio transmitters in the bands 694 - 823 MHz is prohibited.

Certifications

P10R+

Approved under the Declaration of Conformity (DoC) provision of FCC Part 15.

Certified in Canada by ISED to RSS-123.

P10T

Certified under FCC Part 74.

*Certified under FCC Part 15.

**Certified under FCC Part 15 and Part 74.

Certified by ISED in Canada under RSS-123 and RSS-102.

Meets essential requirements of the following European Directives:

- WEEE Directive 2012/19/EU, as amended by 2008/34/EC
- RoHS Directive EU 2015/863

Note: *Please follow your regional recycling scheme for batteries and electronic waste*

This product meets the Essential Requirements of all relevant European directives and is eligible for CE marking.

Hereby, Shure Incorporated declares that the radio equipment is in compliance with Directive 2014/53/EU. The full text of the EU declaration of conformity is available at the following internet address: http://www.shure.com/europe/compliance

Authorized European representative:
Shure Europe GmbH
Headquarters Europe, Middle East & Africa
Department: EMEA Approval
Jakob-Dieffenbacher-Str. 12
75031 Eppingen, Germany

Phone: +49-7262-92 49 0
Fax: +49-7262-92 49 11 4
Email: EMEAsupport@shure.de