Shure Brothers Incorporated
222 Hartrey Avenue
Evanston IL 60202-3696 U.S.A.

Shure PSM700
Personal Stereo Monitor System

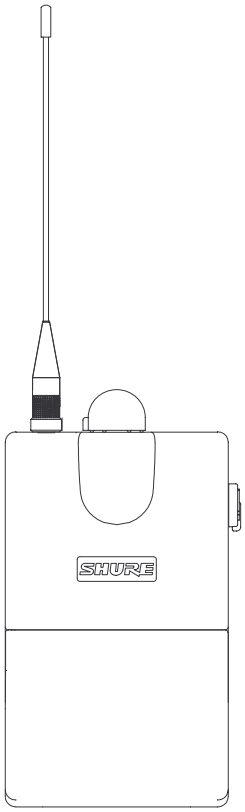

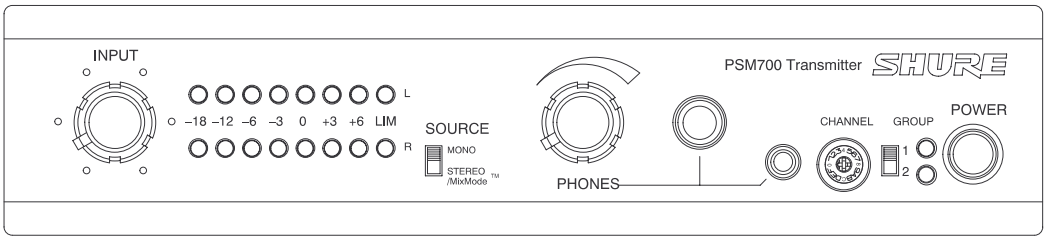

PSM® 700

Wireless Personal Stereo Monitor System
User Guide

Système de retour stéréo personnel sans fil
Guide de l’utilisateur

Drahtloses individuelles Stereomonitorsystem
Bedienungsanleitung

Sistema inalámbrico de monitor estereofónico personal
Guía del usuario

Sistema di controllo stereo personale senza fili
Guida d’uso

©1998, Shure Brothers Inc.
27A???? (QJ)

Printed in U.S.A.

WARNING!

USING THIS SYSTEM AT EXCESSIVE VOLUMES CAN CAUSE PERMANENT HEARING DAMAGE.
USE AS LOW A VOLUME AS POSSIBLE.

In order to use this system safely, avoid prolonged listening at excessive sound pressure levels. Please use the following guidelines established by the Occupational Safety Health Administration (OSHA) on maximum time exposure to sound pressure levels before hearing damage occurs.

90 dB SPL at 8 hours
95 dB SPL at 4 hours
100 dB SPL at 2 hours
105 dB SPL at 1 hour
110 dB SPL at $^1/_2$ hour
115 dB SPL at 15 minutes
120 dB SPL — avoid or damage may occur

It is difficult to measure the exact Sound Pressure Levels (SPL) present at the eardrum in live applications. In addition to the volume setting on the PSM, the SPL in the ear is affected by ambient sound from floor wedges or other devices. The isolation provided by the fit of quality earpieces is also an important factor in determining the SPL in the ear.

Here are some general tips to follow in the use of this product to protect your ears from damage:

1. Turn up the volume control only far enough to hear properly.
2. Ringing in the ears may indicate that the gain levels are too high. Try lowering the gain levels.
3. Have your ears checked by an audiologist on a regular basis. If you experience wax buildup in your ears, stop using the system until an audiologist has examined your ears.
4. Wipe the ear molds with an antiseptic before and after use to avoid infections. Stop using the ear molds if they are causing great discomfort or infection.

This symbol indicates that dangerous voltage constituting a risk of electric shock is present within this unit.

This symbol indicates that there are important operating and maintenance instructions in the literature accompanying this unit.

FCC Statement. The P7R Receiver complies with part 15 of the FCC rules. Operation is subject to the condition that this device does not cause harmful interference.

Licensing Statement. Changes or modifications not expressly approved by Shure Brothers Inc. could void your authority to operate the equipment. Licensing of Shure wireless equipment is the user's responsibility, and licensability depends on the user's classification and application. Shure strongly urges the user to contact the appropriate authority concerning proper licensing.

TABLE OF CONTENTS

Getting Started with the PSM700 . . . . . **3**

Introduction **4**
- Description 4
  - Components 4
  - Features 4

Overview **5**
- P7T Transmitter 5
  - Front Panel 5
  - Back Panel 5
- P7R Receiver 6
  - Controls and Connectors 6
  - DIP Switches 6

Installation and Applications **7**
- Operating Modes 7
  - Stereo Control 7
  - MixMode Control 8
  - Mono Control 8
  - Monitoring the Performers' Mixes 8
- Loop Applications 9
  - Running Multiple PSM700 Wireless Systems under Stereo Control 9
  - Running Floor Monitors through a P7T Transmitter 9
  - Running Multiple PSM700 Systems under MixMode Control 10
  - Running a Recording Device through a P7T Transmitter 10
- Accessories 11

Troubleshooting **12**

Appendix A. Specifications **12**
- Custom Earpieces 14
- Voltage Selection 14

Appendix B. Rack Mounting Options **15**
- Rack Mounting the P7T Transmitter 15
- Front Mounting the Antenna 16

GETTING STARTED WITH THE PSM700 SYSTEM

Thank you for purchasing the PSM700 Personal Stereo Monitor System. The PSM700 is a revolutionary new product family designed to meet the diverse audio monitoring needs of musicians, engineers, and stage performers.

The following are step-by-step instructions showing how to connect your PSM700 wireless system to an audio source while introducing you to some of its features.

P7T Transmitter Setup

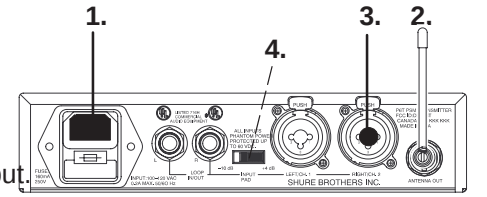

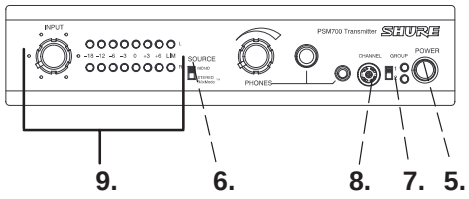

1. Plug the power cord to the power connector. Connect the other end to a power supply.
2. Attach the antenna to the ANTENNA OUT BNC connector.
3. Plug the cable(s) from the audio source (mixer, audio output, CD player) into the LEFT/RIGHT audio inputs. For a stereo send, use both inputs. For mono send, use either the LEFT or RIGHT input.

   NOTE: All inputs are phantom power protected up to 60 VDC.
4. Put the PAD switch in the +4 dB position if the input signal is +4 dB, or the –10 dB position if the input signal is –10 dB.
5. Turn on the P7T Transmitter.
6. Set the SOURCE switch to match the audio send (stereo/mono).
7. Set the GROUP switch in the UP position to frequency GROUP #1.
8. Set the CHANNEL dial to the desired frequency.

   IMPORTANT: Never set more than ONE transmitter to the same operating frequency.
9. Power on the audio source and adjust the level control so the LEDs are in the –3 dB to +3 dB range.

P7R Receiver Setup

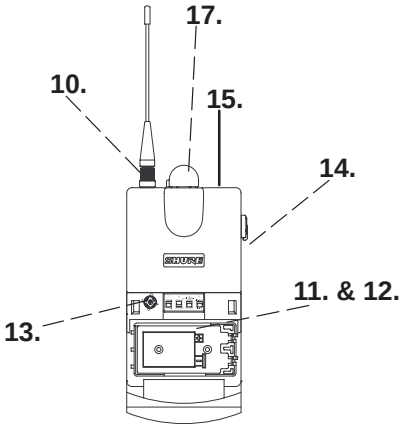

10. Attach the bodypack antenna to the ANTENNA connector by aligning the red dot and threading the shell until it is tight.
11. Open the battery door and insert a 9V alkaline battery.
12. Set the DIP switches according to the illustration.

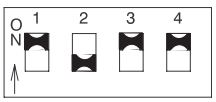

#1: UP – Group #1
#2: DOWN – Stereo control
#3: UP – High frequency boost
#4: UP – Limiter on

13. Set the frequency dial to the desired frequency.
14. Set the balance control to the center detent position.
15. Insert the plug of the earpieces into the headphone connector on the top panel.
16. Insert the earpieces into your ears.
17. Turn on the receiver by rotating the volume knob clockwise past the click, then slowly raise the volume to a comfortable listening level.

Now you know the basic setup for your new PSM700 Personal Stereo Monitor System. If any troubles occur, please refer to the *Troubleshooting* section of this manual. The rest of the manual goes into greater detail on features and applications — including MixMode ™ control, which enables you to customize your own mixes. Please read the rest of the manual to help you make the most of your PSM700 System.

INTRODUCTION

Description

The Shure PSM700 Personal Stereo Monitor System is a frequency-agile, UHF wireless, two-channel stereo, monitor system designed for onstage applications. The PSM has several advantages over onstage loudspeaker monitors: it is less visible, has better sound, allows freedom of movement, and reduces the chances of feedback. It is a versatile system, designed for use in many different sound reinforcement applications: public address, live music, theater, and electronic news gathering (ENG). The wireless system is frequency compatible with other Shure UHF and VHF wireless systems.

Components

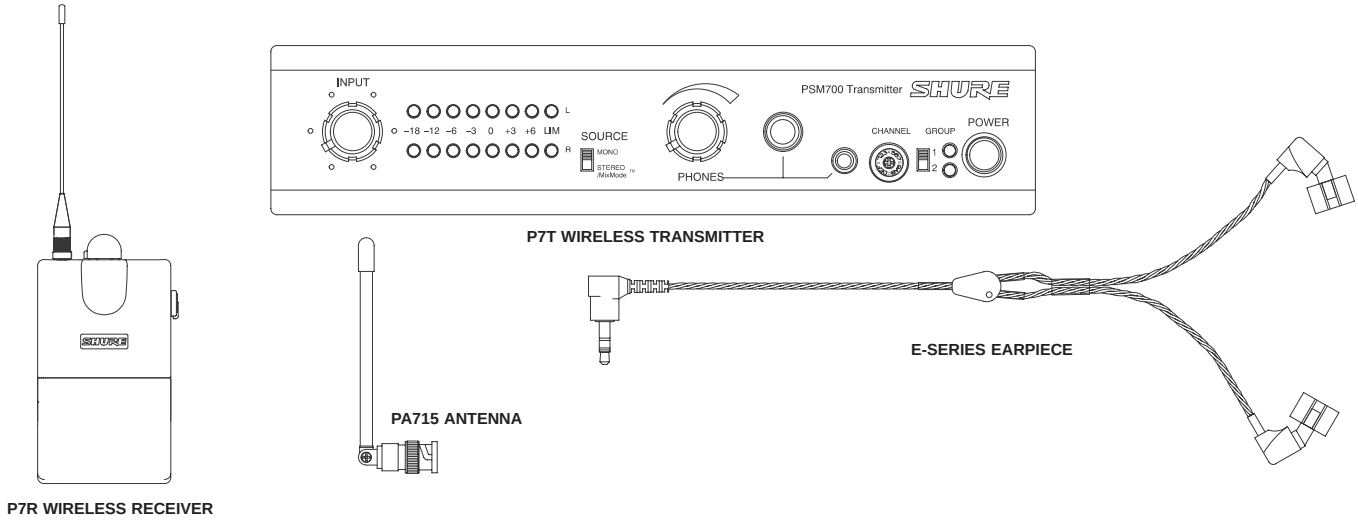

P7T Wireless Transmitter with rack-mounting hardware and one antenna

P7R Wireless Body-Pack Receiver with antenna

One E1 or E5 Earpiece with foam ear inserts

Features

- *UHF operation.*
- *Stereo or MixMode™ control for custom monitor mixes.*
- *32 user-selectable frequencies per system.*
- *Up to 16 compatible frequencies for 16 separate mixes.*
- *Frequency compatible with all Shure Wireless systems (country dependent).*
- *MPX Stereo audio transmission.*
- *Switchable high-frequency boost on P7R.*
- *+4 dBu/–10 dBV input level select switch on P7T.*
- *Electronically balanced, combined 1/4-in./XLR connectors on P7T can be used with balanced or unbalanced connections.*
- *Volume and Balance dials on the P7R Receiver for easy user access.*
- *Internal linear power supply on P7T, switchable between 120 VAC and 230 VAC.*
- *Peak transmitter modulation limiter with fixed threshold and modulation limit indicators.*
- *Loop out connectors on P7T for multiple mix setups and easy installation.*
- *Tone-Key squelch.*
- *Half-rack chassis on P7T complete with mounting hardware.*
- *All metal construction on P7T and P7R*
- *Headphone monitor on P7T for local listening.*

OVERVIEW

P7T Transmitter

Front Panel

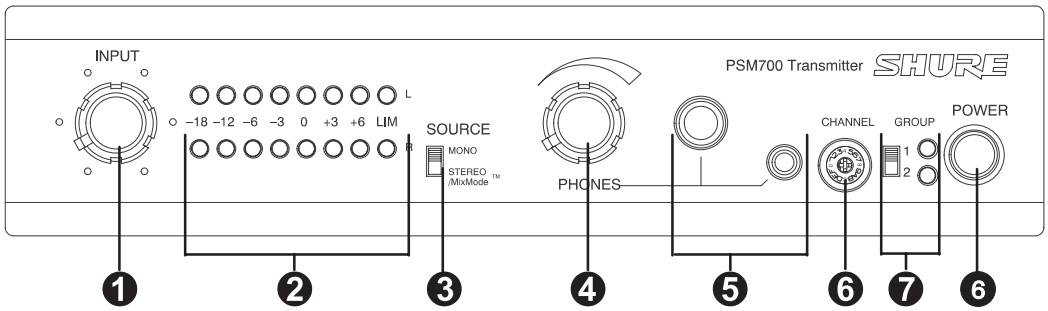

❶ **INPUT Control.** This controls the signal level to the transmitter modulator. For optimum sound, the input level should be set in the –3 dB to +3 dB range.

❷ **Stereo INPUT Meters.** Each channel has an eight LED meter which indicates the modulation level of the radio signal. Important: When the LIM (limit) LEDs illuminate, the system is overdriven. Reduce the input knob to keep the input level LEDs at around –3 dB to +3 dB.

❸ **SOURCE Switch.** Set to MONO when only one input is needed. Set to STEREO/MixMode when both inputs are needed.

❹ **PHONES Volume Control.** This controls the signal level to the headphone output. This does not affect the input level.

❺ **Headphone Connectors — $^1/_4$-in. phone and 3.5 mm ($^1/_8$-in) mini.** Each connector is configured as left=tip, right=ring, ground=sleeve. Please note that only one of these outputs can be used at a time.

❻ **CHANNEL Select Control.** This dial determines the frequency which the P7T transmits. There are two groups of sixteen frequencies available, corresponding with those on the P7R receiver. To change the frequency, use the supplied screwdriver.

❼ **GROUP Switch.** This selects the channel group, 1 or 2.

❽ **Power Switch.** Press this button to turn the unit on.

Rear Panel

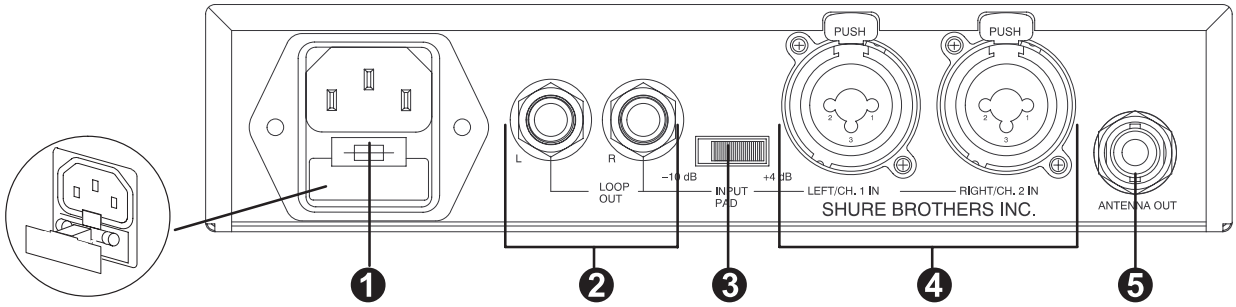

❶ **Power Connector and Fuse.** Connects to a power supply. The fuse is located in the bottom drawer.

❷ **LOOP OUT Connectors — $^1/_4$-in. phone, balanced.** Additional connectors internally wired to the respective LEFT/RIGHT input connectors.

❸ **INPUT PAD Switch.** Selects the input signal level for –10 dBV or +4 dBu operation. See the specifications for the audio equipment to be connected for the proper signal level.

❹ **LEFT/CH. 1 and RIGHT/CH. 2 Input Connectors — Combined $^1/_4$-in. phone and XLR (female), balanced.** Electronically balanced inputs can be used with either balanced or unbalanced outputs. Either connector can be used for mono control.

❺ **Antenna Connector — 50 Ω, BNC type.** This connects to the antenna to transmit UHF signals to the receiver.

P7R Receiver

Controls and Connectors

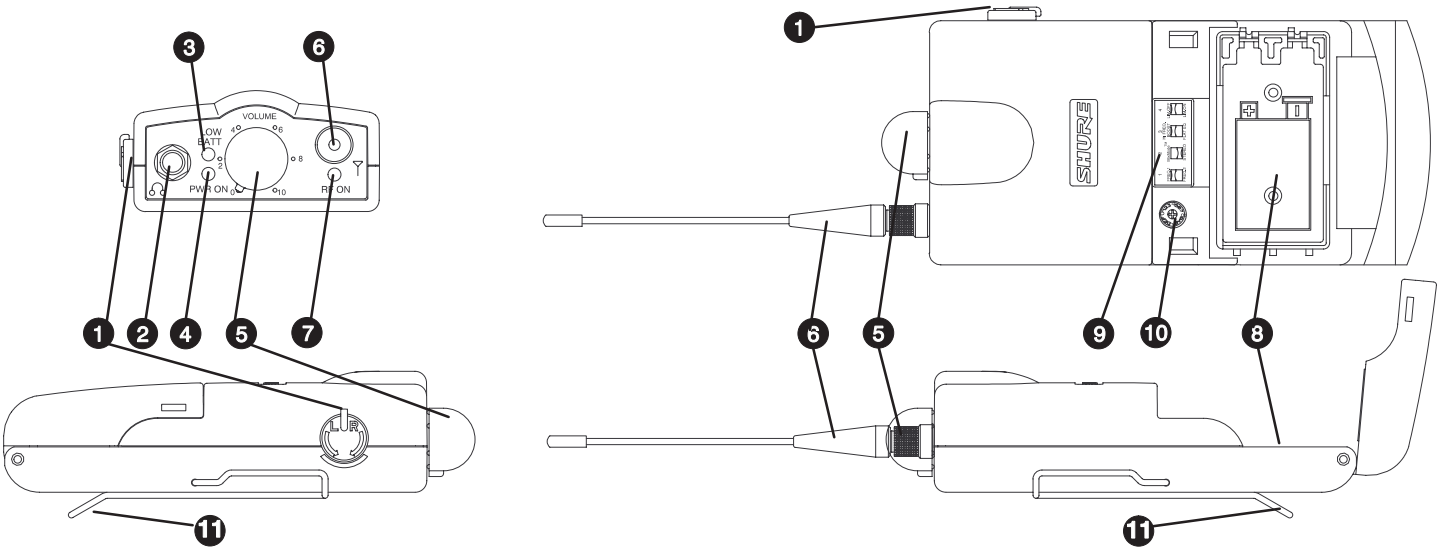

1. **Balance Control.** In stereo mixes, this controls the left/right balance. In MixMode™, this controls the mix level of two transmitter inputs.
2. **Headphone Connector.** 3.5 mm ($^1/_8$-in.) phone jack connects to the E1 earpieces. Left=tip, right=ring, ground=sleeve.
3. **LOW BATT Indicator.** This LED illuminates red when the battery has approximately 45 minutes of operating time remaining, depending on the volume.
4. **Power LED.** This green LED illuminates when the power is ON and the battery is good.
5. **ON/OFF and Volume Control.** Full counter-clockwise turns the P7R OFF. Turn the dial clockwise past the click to turn the P7R ON. Once ON, turn the dial clockwise to raise the volume, and counter-clockwise to lower the volume in the earpieces.
6. **Antenna and Connector.** An easily removable antenna connects to the P7R to receive RF signals from the P7T Transmitter.
7. **RF LED.** Illuminates when the P7R is receiving a signal from the transmitter.
8. **Battery Compartment.** Accepts one 9-volt battery (Duracell recommended). Open the door by pressing the latches on both sides and pulling.
9. **DIP Switches.** Using the DIP Switches, you can customize the operation of the receiver. See *DIP Switches*.
10. **CHANNEL Select Control.** This dial determines the frequency which the P7R receives. There are two groups of sixteen frequencies available, corresponding with those on the P7T transmitter. To change the frequency, use the supplied screwdriver. Use DIP switch 1 to select the frequency group.
11. **Belt Clip.**

DIP Switches

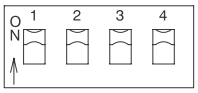

DIP SWITCH	FUNCTION	UP	DOWN
1	GROUP Select	Frequency Channel Group 1	Frequency Channel Group 2
2	Stereo/MixMode Select	MixMode control	stereo control
3	Equalization (Flat/High Boost)	Gives a 6 dB boost at 10 kHz for a better high-end response	normal response
4	Limiter defeat	Limiter on	Limiter off

IMPORTANT: The Limiter is designed to respond to and limit the loudness of unexpectedly high signals. It is not designed to prevent long term exposure to high SPL levels. ***It is designed for use with the E-Series earpieces, so the maximum limited SPL may be different with other earpieces.*** We recommend that you always use the built-in limiter provided with this system. However, a limiter defeat switch has been provided for those who would prefer to use an external limiter product.

Selecting Frequencies

The Shure PSM700 Personal Stereo Monitor System is frequency-agile, with two groups of 16 channels for a total of 32 different possibe operating frequencies. The P7T transmitter and the P7R receiver each has a switch for selecting between the two groups, and a rotary dial for selecting the channel. Use the supplied screwdriver for adjusting the rotary dial.

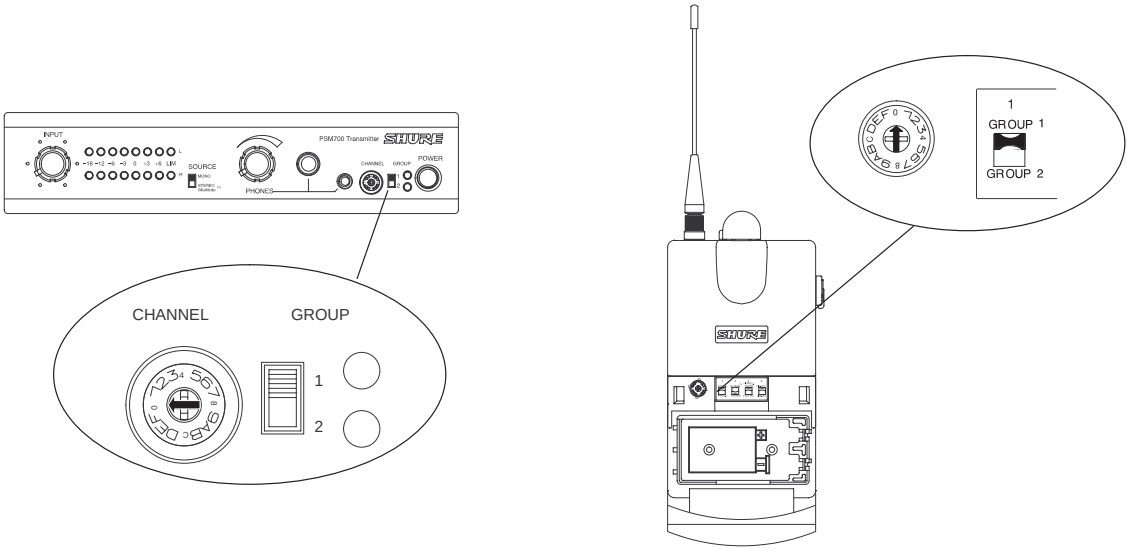

1. Set the GROUP switch on the P7T transmitter to the desired group (group 1 or 2). Set DIP switch 1 on the P7R receiver to the same group.
2. Set the CHANNEL select control on the P7T transmitter to the desired frequency channel. Set the CHANNEL select control on the P7R receiver to the same frequency channel.

INSTALLATION AND APPLICATIONS

The flexible design of the PSM700 Personal Stereo Monitor System makes configuring a monitor mix very simple. In addition, the unique MixMode circuitry enables you to customize your own individual mix in a multiple mix environment. To help you install the PSM700 into your sound system, the tables and diagrams in this section describe three distinct modes of operating the system. Although the examples show only single system setups, you can configure multiple wireless systems in a setup. Some multiple mix setups are detailed in the *LOOP Applications* section of this chapter.

Operating Modes

For optimum performance, *The P7T requires a LINE level input signal.*

Stereo Control	Used for conventional Stereo monitor mixes. *Transmitter* Stereo/MixMode setting *Receiver* Stereo setting *Balance Dial* Varies stereo left/right image
MixMode Control	Used for creating an individual mix between two distinct monitor sends. *Transmitter* Stereo/MixMode setting *Receiver* MixMode setting *Balance Dial* Varies levels between mixes
Mono Control	Used when only one (mono) monitor mix is available. *Transmitter* Mono setting *Receiver* Stereo setting *Balance Dial* Varies the right/left volume control

NOTE: ***For the best results, the input signal must be a LINE level signal.*** For consistency throughout the following diagrams, a mixing console is shown as the source supplying the audio signal to the P7T transmitter. However, any balanced or unbalanced send that outputs a LINE level should drive the P7T. Some devices that would work are CD players, DAT machines, direct injection boxes, and microphone preamplifiers.

Stereo Control

This diagram shows how to connect the PSM700 system with a stereo monitor mix.

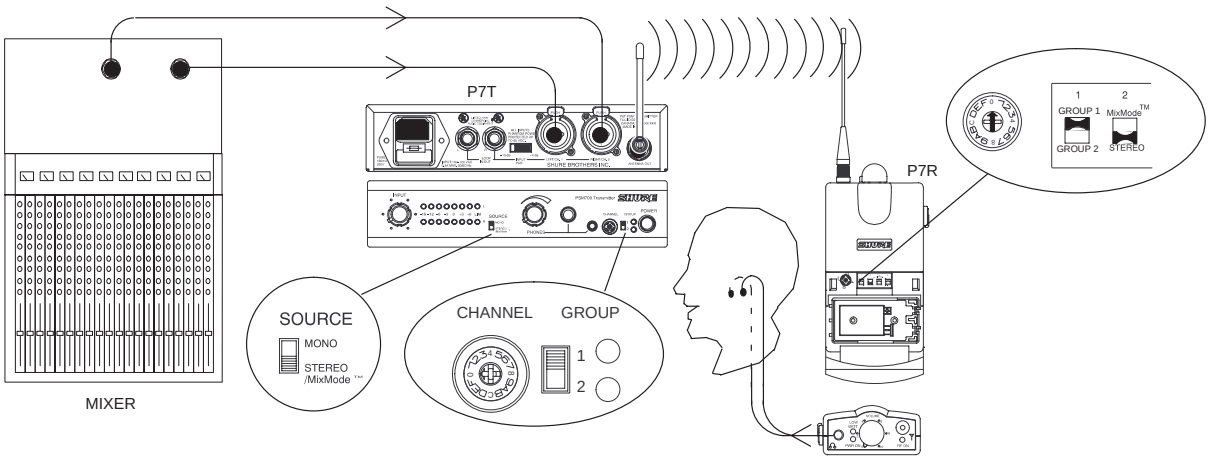

1. Connect the stereo mixer outputs to the L/CH1. and R/CH2. INPUTs on the P7T transmitter
2. Set the SOURCE switch on the P7T front panel to STEREO.
3. Set DIP switch 2 of the P7R Receiver to STEREO.
4. Set the P7T transmitter and the P7R receiver to the same frequency.
5. Use the balance control on the P7R Receiver to adjust the balance of the Right and Left channel volume.

MixMode Control

This diagram shows how to connect the PSM700 system with two monitor mixes combined at the receiver. This allows you to vary the level between the two mixes to create a custom mix.

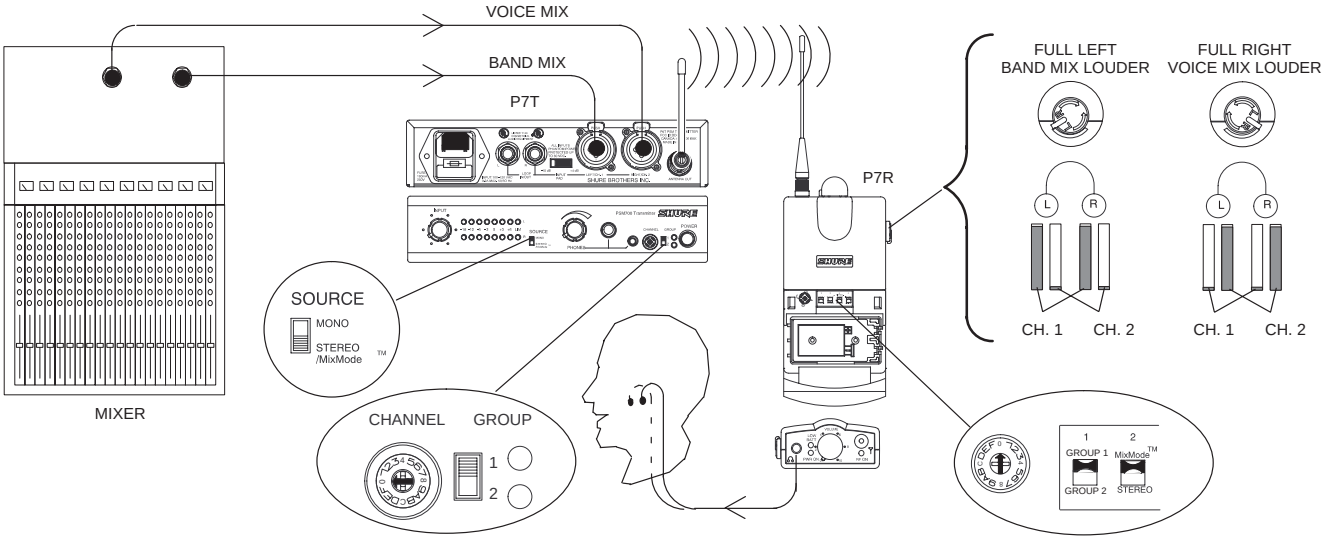

1. Connect the monitor mix 1 and monitor mix 2 mixer outputs of the mixer to the L/CH. 1 and R/CH. 2 audio inputs of the P7T transmitter.
2. Set the SOURCE switch on the P7T transmitter to STEREO.
3. Set DIP switch 2 on the P7R receiver to MixMode™.
4. Set the P7T transmitter and the P7R receiver to the same frequency.
5. Use the balance control on the P7R to adjust the relative levels between the two monitor mixes.

Mono Control

This diagram shows how to connect the PSM700 system with a mono monitor mix.

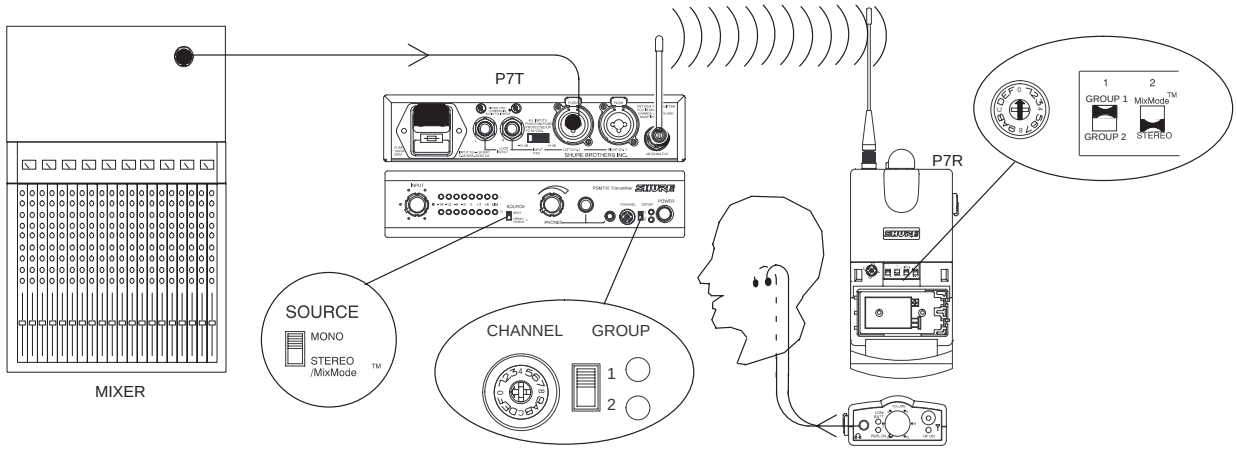

1. Connect the mono monitor output of the mixer to either the Left or Right audio inputs of the P7T.
2. Set the SOURCE switch on the front panel to MONO.
3. Set DIP switch 2 of the P7R to STEREO.
4. Set the P7T transmitter and the P7R receiver to the same frequency.

Monitoring the Performers' Mixes

With the frequency select controls, you can soundcheck the different mixes in a multiple transmitter setup. Using one P7R receiver, set that P7R to same frequency as each successive P7T to make sure the you hear the transmission. If necssary, twist the balance dial to check for proper left/right stereo balance or MixMode operation.

LOOP Applications

The LOOP OUT L (left) and R (right) outputs allow the signal going through the P7T to be run to other devices. The LOOP feature of the P7T can be used for any number of applications. Shown here are only a few examples of how it can be used.

NOTE: The LOOP connectors act as either inputs or outputs. They can be used as outputs when the LEFT and RIGHT INPUT connectors are used for input. However, LOOP connectors can also act as inputs when connected directly to the outputs of a mixer. When the LOOP connectors are used as inputs, the LEFT and RIGHT INPUT connectors act as outputs. These diagrams show the LOOP connectors being used as outputs. Also, the input pad does not affect the level of the LOOP signals.

Running Multiple PSM Wireless Systems Under Stereo Control

The LOOP OUT connectors can be used to send the same monitor stereo signals to multiple P7T wireless transmitters. This will free up busses on the mixing console, allowing you more freedom with your audio system. Simply connect a P7T to the mixing console as described in *Stereo Control*, then run $^1/_4$-in to $^1/_4$-in from the L/R LOOP connectors of the first unit to the LEFT/RIGHT Input connectors of the next unit. Connect subsequent unit in the same way.

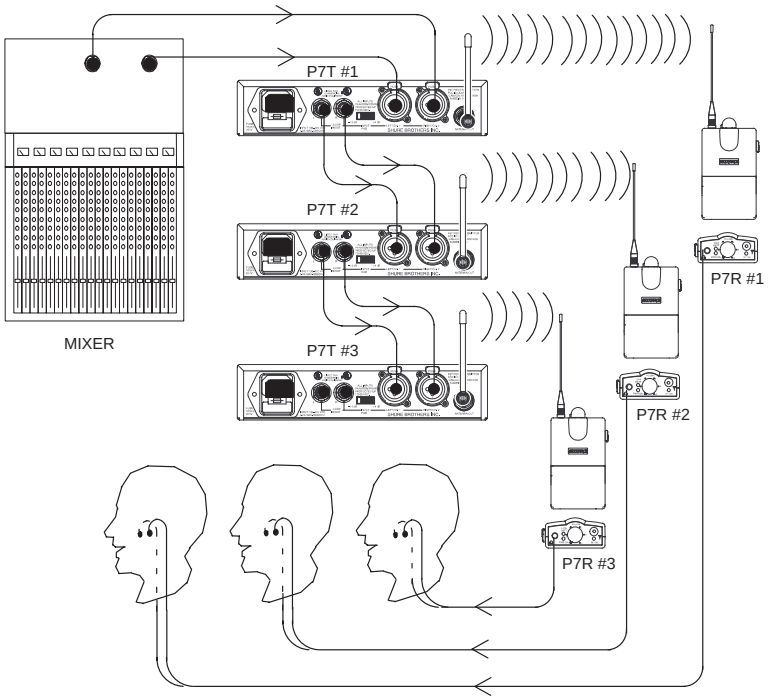

Running Floor Monitors Through a P7T Transmitter

The monitor audio signal can be sent through the LOOP connectors to another amplifier, such as an amplifier for an onstage monitor system. When setup this way, the P7R and the onstage monitors will have the same audio.

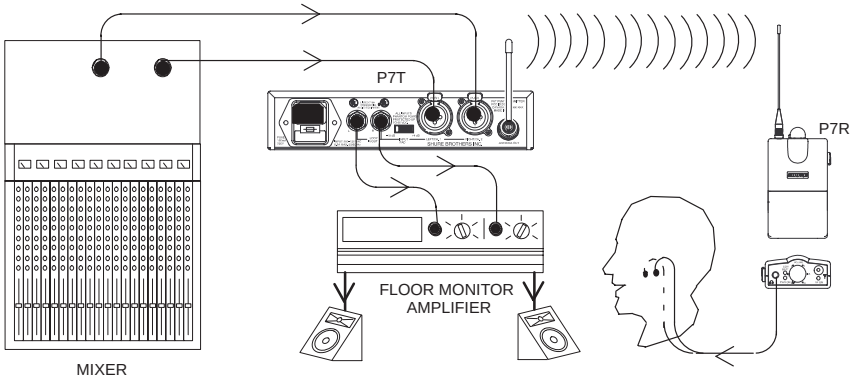

Running Multiple PSM Wireless Systems Under MixMode Control

A main mono monitor mix can be sent to multiple P7T transmitters, then independent monitor mixes can be sent to the second channel of each. This will allow an entire band to hear the same monitor mix, while giving each individual player a separate mix of their own. Each player can then use the balance control to adjust the levels between their own mix and the main mono monitor mix.

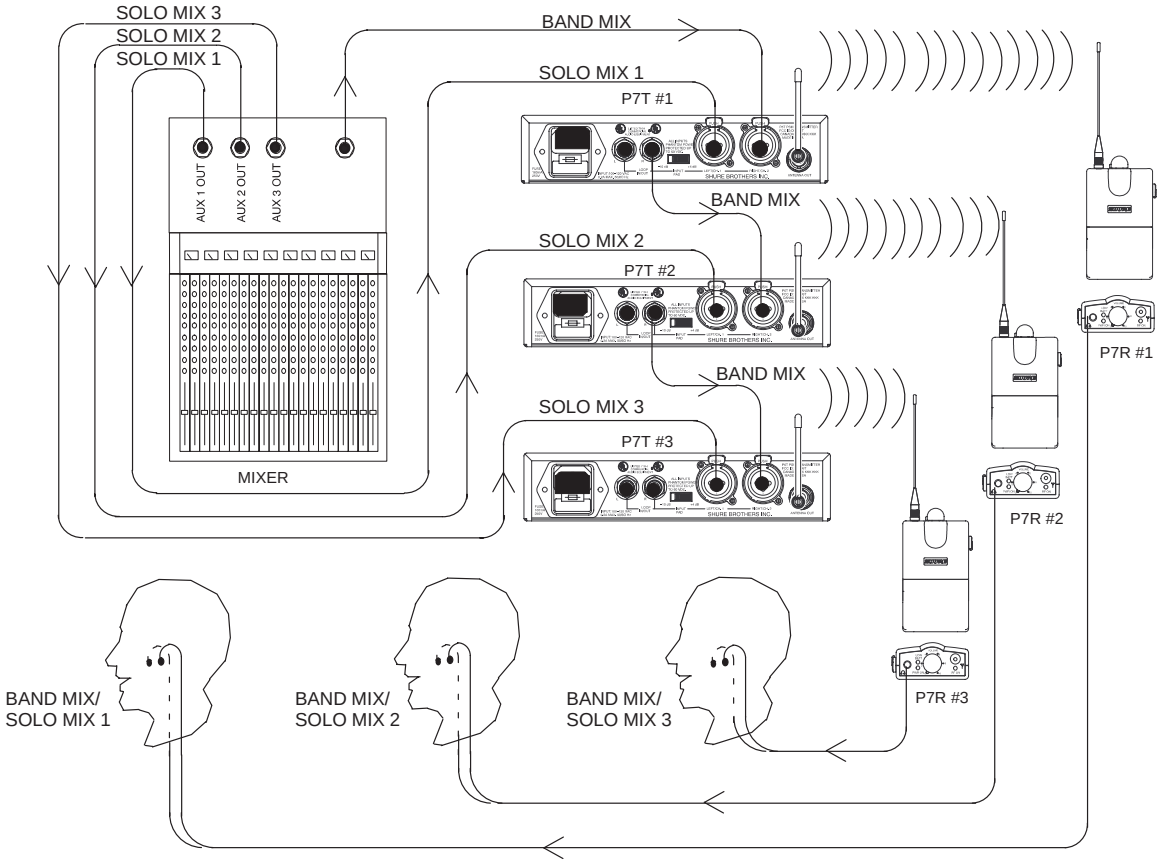

Running a Recording Device Through a P7T Transmitter

If you would like to make a recording of a performance, the LOOP outputs can be connected to the inputs of a tape deck, DAT, or other recording device.

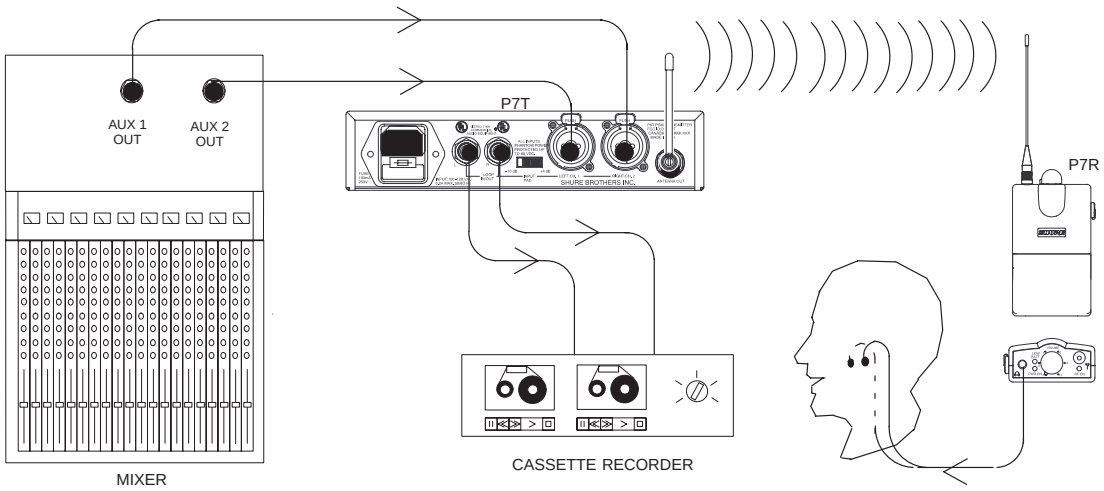

TROUBLESHOOTING

PROBLEM	**SOLUTION**
No sound at the Receiver	✓ Check the power cord on the Transmitter and make sure it is powered on. ✓ Make sure both the transmitter and the receiver are set to the same frequency. ✓ Make sure the earpiece is plugged in to the receiver. ✓ Make sure receiver is on and the battery is good. ✓ Make sure both antennas are correctly attached. ✓ Listen to the headphone monitor on the transmitter to check audio feed.
Low Receiver Range	✓ Make sure all antennas are fully inserted and secured on to jacks. ✓ Try to maintain line-of-sight between transmitter and receiver. ✓ Try the other frequencies in case interference is limiting the range. ✓ Check for television channel interference. ✓ Make sure the PA715 antenna is not remote mounted.
Receiver sounds fuzzy or distorted	✓ Make sure no other transmitters are operating on your frequency. ✓ Make sure transmitter input level is 0 dB ±3 dB for optimum performance. ✓ Listen to the headphone monitor on the transmitter to check audio feed. ✓ Try and maintain a minimum of 10 ft. between transmitter antennas and receiver when using multiple transmitters.
Low audio output at the receiver headphones	✓ Make sure transmitter input level is 0 dB ±3 dB for optimum performance. ✓ Switch the transmitter pad to –10 dBV position if the input is too low.

APPENDIX A. TECHNICAL SPECIFICATIONS

SYSTEM

rf Carrier Frequency Range
722 to 862 MHz (country dependent)

Operating Range
300 ft. (environment dependent)

Audio Frequency Response
50 to 15k Hz (+0, –3 dB re 1KHz); earpiece dependent

Image Rejection
???????? dB typical

Spurious Rejection
60 dB typical

Total Harmonic Distortion
0.8% typical (Ref. ±35 KHz deviation)

Modulation
FM ±35 kHz Deviation (Nominal), MPX Stereo

Channel Separation
35 dB typical

Signal-to-Noise Ratio
????????? dB typical (A-weighted)

Operating Temperature
–7° C to +49° C (+20° F to 120° F)

Battery Life
4–6 hours, volume dependent

Polarity
P7T audio inputs to P7R audio outputs: Non-inverting
XLR: pin 2 positive with respect to pin 3
1/4-in. TRS: Tip positive with respect to ring

P7T TRANSMITTER

RF Output Power
100 mW (+20 dBm) typical conducted (country dependent)

Modulation Limiter
Internal peak limiter (>10:1 compression)

Antenna
External whip, 50 Ω BNC connector

Power Requirements
P7T: 120 Vac, 50/60 Hz
EP7T: 230 Vac, 50/60 Hz
NOTE: This product is not disconnected from the mains power supply when the power switch is in the OFF position.

Current
115 mAac maximum at 120 Vac
55 mAac maximum at 230 Vac

Fuse
P7T: 120 Vac, 160 mA/250 V (SLO-BLO®)
EP7T: 230 Vac, 80 mA/250 V time delay

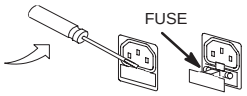

Dimensions
44.5 mm X 197.4 mm X 238.1 mm (1 $^3/_4$ in. X 7 $^3/_4$ in. X 9 $^1/_2$ in.)

Net Weight
3.30 kg (3 lbs., 4.8 oz.)

P7R RECEIVER

rf Sensitivity
1.2 µV typical

Squelch Threshold
4 µV typical

Antenna Input Impedance
50 Ω typical

Antenna
External, threaded connector

Power Requirements
9 V battery

Audio Output Connector
3.5 mm Stereo (Left = tip, Right = ring, Ground = sleeve)

Minimum Load Impedance
16 Ω

Net Weight
0.52 lbs.

Overall Dimensions
27.18 mm X 64.52 mm X 85.09 mm
(1.070 in. X 2.540 in. X 3.350 in.)

Certification
P7T: Type Accepted under FCC Parts 74 and 90. Certified by IC in Canada under TRC–78. UL and cUL Listed.
EP7T: Conforms to European Union Directives, eligible to bear CE marking. Type Certifiedto BZT 17 TR 2019, and BAPT 122 R 1. EMC Immunity Certified to ETS 300 445. VDE GS Certified to EN 60 065
P7R: Approved under the Notification provision of FCC Part 15. Certified by IC in Canada under TRC-78. Conforms to European Union Directives, eligible to bear CE marking. Type Certified to BZT 17 TR 2019, and BAPT 122 R 1. EMC Immunity Certified to ETS 300 445.

FURNISHED ACCESSORIES

Body-Pack Antenna	PA710
Transmitter Antenna	PA715
Rack Mount Kit	PA745
Bag of 10 Foam Ear Inserts	PA750
60 cm (2 ft) Coaxial Cable (RG-58/U)	UA802

OPTIONAL ACCESSORIES

Antenna Combiner	PA770 (120 VAC) PA765E (240 VAC)
Unidirectional Antenna	PA705
10 ft Coaxial Antenna Cable (BNC connector)	PA725
Triple-Flange Ear Inserts (2)	PA755

Connectors

P7T Audio Inputs (LEFT/CH.1 and RIGHT/CH.2)

Connector: (XLR and 1/4-inch combined)	XLR (female)	$^1/_4$-inch phone jack (female)
Configuration:	electronically balanced	electronically balanced
Actual Impedance:	20 kΩ	20 kΩ
Nominal Input Level:	+4 dBu (+4 input level) –10 dBV (–10 input level)	+4 dBu (+4 input level) –10 dBV (–10 input level)
Maximum Input Level:	+25 dBu (+4 input level) +13 dBu (–10 input level)	+25 dBu (+4 input level) +13 dBu (–10 input level)
Pin Assignments:	Pin 1 = ground Pin 2 = hot Pin 3 = cold	Tip = hot ring = cold sleeve = ground
Phantom Power Protection?	Yes Up to 60 VDC	Yes Up to 60 VDC

P7T L/R LOOP Outputs (IN and OUT)

Connector: (XLR and 1/4-inch combined)	$^1/_4$-inch jack (female)
Configuration:	electronically balanced
Actual Impedance:	20 kΩ
Nominal Input Level:	+4 dBu (+4 input level) –10 dBV (–10 input level)
Maximum Input Level:	+25 dBu (+4 input level) +13 dBu (–10 input level)
Pin Assignments:	Tip = hot ring = cold sleeve = ground
Phantom Power Protection?	Yes Up to 60 VDC

Voltage Selection

P7T and EP7T transmitters can be internally modified to operate at either 120 Vac or 230 Vac.

WARNING
Voltages in this equipment are hazardous to life. No user-serviceable parts inside. Refer all servicing to qualified service personnel. The safety certifications of the P7T do not apply when the operating voltage is changed from the factory setting.

To change the operating voltage, follow these steps.

1. Disconnect the P7T from the ac power source.
2. Remove the eight Phillips head screws securing the top cover.
3. Locate Voltage Selector switch SW4 adjacent to power transformer T1 and, using a screwdriver, turn the center rotor to the desired position:
   For 120 V operation, turn it to the 115 V position.
   For 230 V operation, turn it to the 230 V position.
4. Locate fuse and remove it. Replace it with the proper fuse:
   For 120 V operation, use a 160 mA, 250 V, slow-blow fuse.
   For 230 V operation, use a 80 mA, 250 V, time delay fuse.

Fuse part numbers are:

Fuse Type	Shure Part No.	Part No.
80 mA, 250 V time delay	80H380	Schurter .034.3106
160 mA, 250 V SLO-BLO	80K258	Littelfuse® 218.160

5. Replace the power cord with the proper power cord:
   For 120 V operation, use an IEC appliance connector on the equipment end and a mains connector suitable for 115 V operation on the other.* (Shure part #95A8389.)
   For 230 V operation, use an IEC appliance connector on the equipment end and a CEE 7/7 (“Schuko”) mains connector on the other.* (Shure part #95A8247.)

*For systems requiring other mains connectors, obtain a power cord with an IEC 320 type mating connector for connection to the P7T, and an appropriate plug on the other end for connection to the mains. The supplied cord uses Harmonized IEC Cordage with color coding as follows: Brown = Line, Blue = Neutral, Green/Yellow = Ground.