SHURE®

LEGENDARY
PERFORMANCE™

QLX-D Wireless System

User Guide

Shure Incorporated Confidential

Please Note: The following document layout is preliminary to identify, organize, and prioritize content. All copy including titles, descriptions, photos, specifications, and artwork are not final at this time.

This device is a prototype for testing purpose only. It is not intended to be placed on the market nor be sold. It shall be returned to the Shure Incorporated headquarters located in Niles, Illinois USA after testing.

© 2013 Shure Incorporated
27A22351 (Rev. Preliminary)

Printed in U.S.A.

IMPORTANT SAFETY INSTRUCTIONS

1. READ these instructions.
2. KEEP these instructions.
3. HEED all warnings.
4. FOLLOW all instructions.
5. DO NOT use this apparatus near water.
6. CLEAN ONLY with dry cloth.
7. DO NOT block any ventilation openings. Allow sufficient distances for adequate ventilation and install in accordance with the manufacturer's instructions.
8. DO NOT install near any heat sources such as open flames, radiators, heat registers, stoves, or other apparatus (including amplifiers) that produce heat. Do not place any open flame sources on the product.
9. DO NOT defeat the safety purpose of the polarized or groundingtype plug. A polarized plug has two blades with one wider than the other. A grounding type plug has two blades and a third grounding prong. The wider blade or the third prong are provided for your safety. If the provided plug does not fit into your outlet, consult an electrician for replacement of the obsolete outlet.
10. PROTECT the power cord from being walked on or pinched, particularly at plugs, convenience receptacles, and the point where they exit from the apparatus.
11. ONLY USE attachments/accessories specified by the manufacturer.
12. USE only with a cart, stand, tripod, bracket, or table specified by the manufacturer, or sold with the apparatus. When a cart is used, use caution when moving the cart/apparatus combination to avoid injury from tip-over.
13. UNPLUG this apparatus during lightning storms or when unused for long periods of time.
14. REFER all servicing to qualified service personnel. Servicing is required when the apparatus has been damaged in any way, such as power supply cord or plug is damaged, liquid has been spilled or objects have fallen into the apparatus, the apparatus has been exposed to rain or moisture, does not operate normally, or has been dropped.
15. DO NOT expose the apparatus to dripping and splashing. DO NOT put objects filled with liquids, such as vases, on the apparatus.
16. The MAINS plug or an appliance coupler shall remain readily operable.
17. The airborne noise of the Apparatus does not exceed 70dB (A).
18. Apparatus with CLASS I construction shall be connected to a MAINS socket outlet with a protective earthing connection.
19. To reduce the risk of fire or electric shock, do not expose this apparatus to rain or moisture.
20. Do not attempt to modify this product. Doing so could result in personal injury and/or product failure.
21. Operate this product within its specified operating temperature range.

This symbol indicates that dangerous voltage constituting a risk of electric shock is present within this unit.

This symbol indicates that there are important operating and maintenance instructions in the literature accompanying this unit.

WARNING: This product contains a chemical known to the State of California to cause cancer and birth defects or other reproductive harm.

WARNING

- Battery packs may explode or release toxic materials. Risk of fire or burns. Do not open, crush, modify, disassemble, heat above 140°F (60°C), or incinerate.
- Follow instructions from manufacturer
- Only use Shure charger to recharge Shure rechargeable batteries
- WARNING: Danger of explosion if battery incorrectly replaced. Replace only with same or equivalent type.
- Never put batteries in mouth. If swallowed, contact your physician or local poison control center
- Do not short circuit; may cause burns or catch fire
- Do not charge or use battery packs other than Shure rechargeable batteries
- Dispose of battery packs properly. Check with local vendor for proper disposal of used battery packs.
- Batteries (battery pack or batteries installed) shall not be exposed to excessive heat such as sunshine, fire or the like

Note: Use only with the included power supply or a Shure-approved equivalent.

LICENSING INFORMATION

Licensing: A ministerial license to operate this equipment may be required in certain areas. Consult your national authority for possible requirements. Changes or modifications not expressly approved by Shure Incorporated could void your authority to operate the equipment. Licensing of Shure wireless microphone equipment is the user's responsibility, and licensability depends on the user's classification and application, and on the selected frequency. Shure strongly urges the user to contact the appropriate telecommunications authority concerning proper licensing, and before choosing and ordering frequencies.

This Class B digital apparatus complies with Canadian ICES-003. Cet appareil numérique de la classe B est conforme à la norme NMB-003 du Canada.

Information to the user

This equipment has been tested and found to comply with the limits for a Class B digital device, pursuant to Part 15 of the FCC Rules. These limits are designed to provide reasonable protection against harmful interference in a residential installation. This equipment generates uses and can radiate radio frequency energy and, if not installed and used in accordance with the instructions, may cause harmful interference to radio communications. However, there is no guarantee that interference will not occur in a particular installation. If this equipment does cause harmful interference to radio or television reception, which can be determined by turning the equipment off and on, the user is encouraged to try to correct the interference by one or more of the following measures:

- Reorient or relocate the receiving antenna.
- Increase the separation between the equipment and the receiver.
- Connect the equipment to an outlet on a circuit different from that to which the receiver is connected.
- Consult the dealer or an experienced radio/TV technician for help.

Caution: Avoid operating mobile phones and mobile broadband devices near your wireless system to prevent the possibility of interference.

Do Not Duplicate or Redistribute

System Overview

Shure QLX-D™ Digital Wireless delivers stunning performance with 24-bit digital audio clarity in a refined, compact design. Combining innovative features with simplified setup and easy operation, QLX-D offers outstanding wireless functionality for demanding live sound applications.

Digital signal processing enables QLX-D to capture finely detailed audio over an extended 20 Hz to 20 KHz frequency range with virtually flat response and extremely wide dynamic range. Featuring all-metal construction, QLX-D systems come in a variety of options, from handheld transmitters with choice of legendary Shure microphone capsules to bodypack systems with headset or lavalier microphones.

QLX-D is incredibly RF spectrum efficient, allowing up to 17 systems to operate simultaneously in a standard 6 MHz TV band (22 channels in 8 MHz TV band), and employs automatic channel scanning to quickly find open frequencies. Multiple systems can be networked together over Ethernet, enabling streamlined channel scanning across all receivers in a system and compatibility with Shure Wireless Workbench® control software for advanced frequency coordination. AES 256-bit encryption can be enabled for applications requiring secure transmission.

Advanced lithium-ion rechargeablity options provide dramatic long-term cost savings and extended transmitter battery life when compared to alkaline batteries, with built-in battery metering that reports remaining runtime in hours and minutes.

Stunning in its performance, QLX-D delivers the latest innovations in wireless technology excellence from Shure.

Features

- Transparent 24-bit digital audio
- Extended 20 Hz to 20 kHz frequency range
- 120 dB dynamic range
- 64 MHz tuning bandwidth (region dependent)
- 60 available channels per frequency band (region dependent)
- Up to 17 compatible systems per 6MHz TV band; 22 systems per 8 MHz band
- Easy pairing of transmitters and receivers over IR scan and sync
- Automatic channel scan
- Ethernet networking for multiple receiver systems
- Network channel scanning configures open frequencies for networked receivers
- Compatible with Shure Wireless Workbench 6 control software
- 256-bit AES encryption for secure transmission
- Simple and easy-to-use interface
- Compatible with external control systems such as AMX or Crestron
- Professional-grade all-metal construction
- Compatible with AA batteries or Shure SB900 rechargeable Lithium-ion battery

System Components

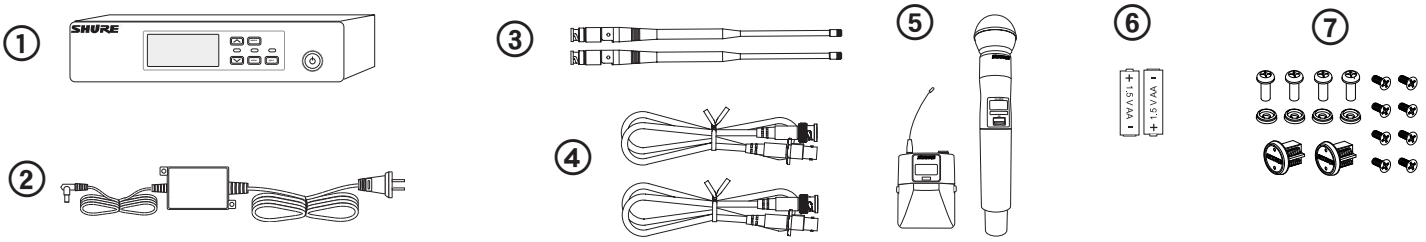

① QLXD4 Receiver
② PS23 Power Supply
③ 1/2 Wave Antennas (2)
④ 2 ft. BNC Cables (2)
⑤ Choice of QLXD1 Bodypack Transmitter or QLXD2 Handheld Transmitter
⑥ AA Alkaline Batteries (not included in Argentina)
⑦ Rackmount Hardware

Model Variations

Additional components are added to the basic system components listed above to create systems designed to meet specific performance needs.

QLXD2 Handheld Transmitter	QLXD1 Bodypack Guitar System	QLXD1 Bodypack Headworn or Lavalier	Bodypack and Handheld Combo System
Includes QLXD2 Handheld, available with any of the following microphone cartridges: • SM58 • Beta 58A • SM86 • Beta 87A • SM87A • Beta 87C • KSM9 • KSM9HS (black) Microphone Clip Zipper Bag	Includes QLXD1 bodypack transmitter Premium instrument cable Zipper Bag	Includes QLXD1 bodypack, available with any of the following microphone cartridges: • Beta 98H/C • WL93 • WL183 • WL184 • WL185 • MX150 (omni) • MX150 (cardioid) • MX153 (black or tan) • SM35 Zipper Bag	• QLXD1 bodypack transmitter with WL185 Microflex cardioid lavalier microphone • QLXD2 handheld transmitter with Shure SM58 microphone cartridge • Zipper Bag (2)

Do Not Duplicate or Redistribute

Step 1: Power and Antenna Connection

① Connect an antenna to each of the antenna connectors.
② Connect the power supply to the receiver and plug into an AC power source.
③ Connect the receiver audio output to a mixer or amplifier.
④ Press and hold the power button to turn on the receiver.

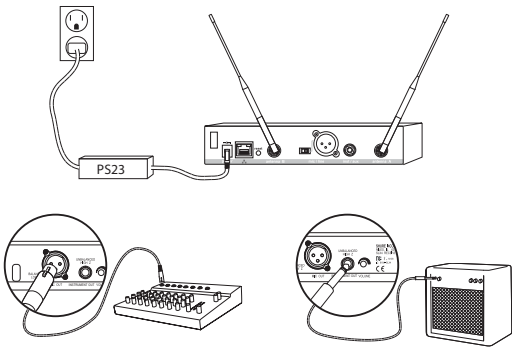

Step 2: Scanning for the Best Available Frequency

1. Press the **menu** button on the receiver to access the scan function.

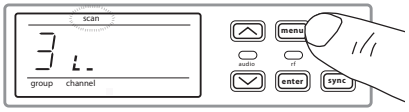

2. Press the **enter** button to start a frequency scan. The scan icon will flash while in scan mode. When the scan is complete, the selected group and channel appear on the display.

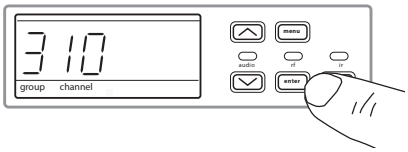

Step 3: Install Batteries into Transmitter

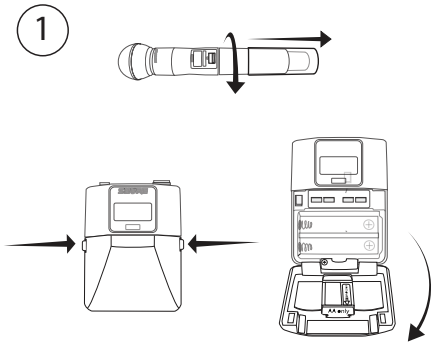

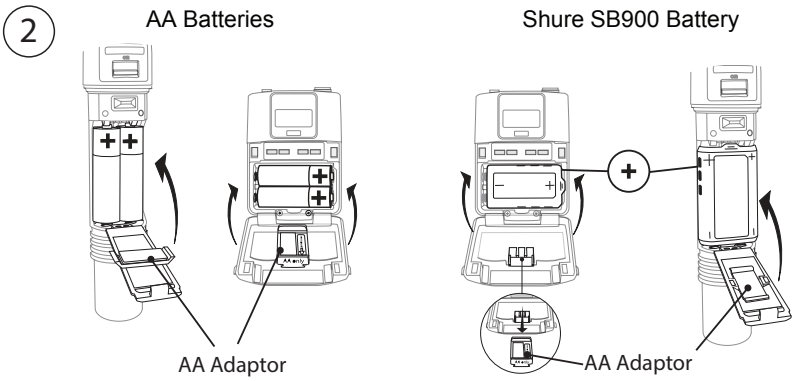

① **Accessing the Battery Compartment**

Press the side tabs on the bodypack or unscrew the cover on the handheld as shown to access the battery compartment.

② **Installing Batteries**

- **AA Batteries:** Place batteries (note polarity markings) and AA Adaptor as shown
- **Shure SB900 Battery:** Place battery as shown (note polarity markings), remove AA Adaptor from bodypack transmitter, stow AA Adaptor in door for handheld transmitter

Note: If using AA batteries, select a battery type from the transmitter menu to ensure accurate battery metering.

Step 4: IR Sync to Create an Audio Channel

1. Press the **sync** button on the receiver. The red **ir** LED will blink indicating that sync mode is active.
2. Align the IR sync windows of the transmitter and receiver at a distance of <15 cm (6 in.). When the transmitter and receiver are aligned, the red **ir** LED remains on and the sync will automatically occur.

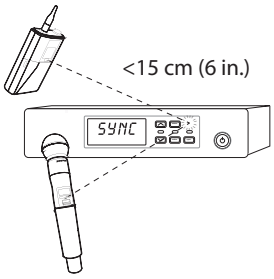

3. **sync good** appears on the display when IR sync is complete. The blue **rf** LED will illuminate indicating that the transmitter is within range of the receiver.

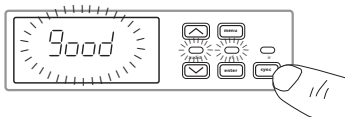

Note: If the IR sync fails, repeat the IR sync procedure, carefully maintaining alignment between the IR windows of the transmitter and receiver.

Step 5: Sound Check and Gain Adjustment

1. Test the transmitter at performance levels while monitoring the **audio** meter and the **audio** LED.

Tip: The **audio** meter should display at least 3 bars and the **audio** LED should be green. Reduce the gain if there is audible distortion of the audio.

2. Increase or decrease the gain if necessary by pressing the ∧ ∨ buttons on the receiver front panel.

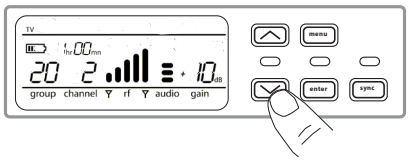

Do Not Duplicate or Redistribute

Receiver Front and Back Panels

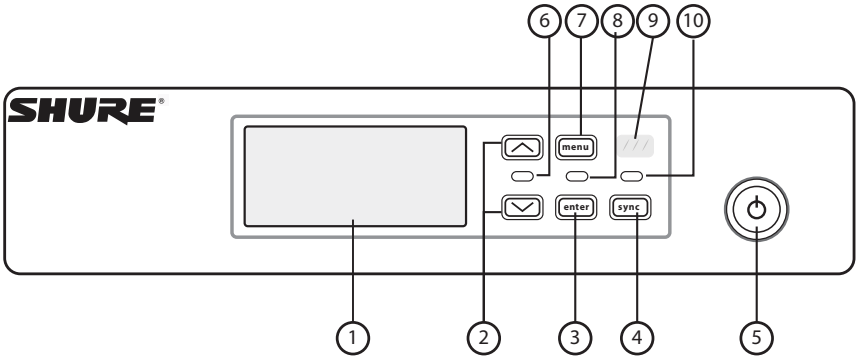

① **Display**
Shows menu options, receiver and transmitter settings.

② **Arrow Buttons**
Adjust gain setting or change menu parameters.

③ **Enter Button**
Press to save menu or parameter changes.

④ **Sync Button**
Press to activate IR sync.

⑤ **Power Switch**
Powers receiver on or off.

⑥ **Audio LED**
- Green = normal
- Yellow = signal approaching limiter threshold
- Red = limiter engaged to prevent clipping

⑦ **Menu Button**
Press to access or select menu screens or to cancel pending changes. Press and hold to return to the home screen.

⑧ **RF LED**
Illuminates when RF link with transmitter is active.

⑨ **IR Window**
Align with the transmitter IR window during an IR sync to automatically program transmitters.

⑩ **Sync LED**
- Blinking: IR sync mode is enabled
- On: Receiver and transmitter aligned for IR sync

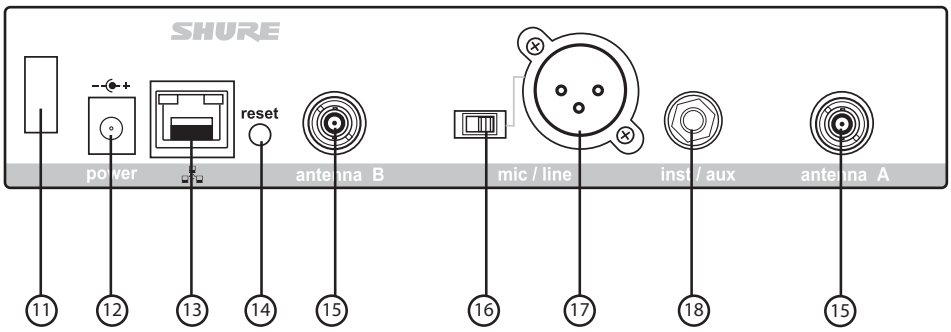

⑪ **Power Cord Strain Relief**
Secures power cord.

⑫ **Power Supply Jack**
Connection point for DC power supply.

⑬ **Ethernet Port**
For network connection.
- Amber LED (network speed):
  off = 10 Mbps, on = 100 Mbps
- Green LED (network status):
  off = no network link, on = network link active
  flashing = rate corresponds to traffic volume

⑭ **Receiver Reset**
Press to restore receiver default settings.

⑮ **Antenna Connectors**
BNC connector for receiver antennas

⑯ **Mic/Line Switch**
Sets output level to microphone or line.

⑰ **XLR Audio Output**
Balanced (1: ground, 2: audio +, 3: audio -)

⑱ **1/4" Instrument/Auxiliary Output**
Impedance Balanced (Tip: audio, Ring: no audio, Sleeve: ground)

Do Not Duplicate or Redistribute

Transmitters

① **Power LED**
- Green = unit is powered on
- Red = low battery

② **On/Off Switch**
Powers the transmitter on or off.

③ **Display:**
View menu screens and settings. Press any control button to activate the backlight.

④ **IR window**
Align with the receiver IR window during an IR sync for automated transmitter programming.

⑤ **Menu Navigation Buttons**
menu = Use to navigate between menu screens.

▼▲ = Use to edit menu parameters

enter = Press to confirm and save parameter changes.

Tip: Press the **menu** button to exit without saving parameter changes.

⑥ **Battery Compartment**
Requires 2 AA batteries or a Shure SB900 rechargeable battery.

⑦ **AA Battery Adapter**
Secures batteries when powering transmitter with AA batteries instead of Shure SB900 battery.

⑧ **Bodypack Antenna**
For RF signal transmission.

⑨ **Handheld Integrated Antenna**
For RF signal transmission.

⑩ **Microphone Cartridge**
See Optional Accessories for a list of compatible cartridges.

⑪ **TA4M Input Jack**
Connects to a 4-Pin Mini Connector (TA4F) microphone or instrument cable.

⑫ **Battery Contact Cover**
Align the cover as shown to prevent reflections from the battery contacts during broadcasts or performances.

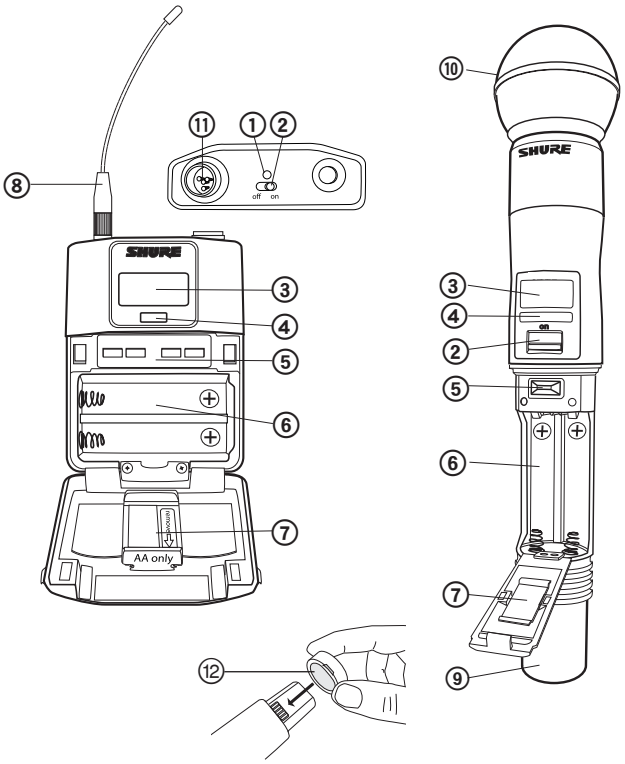

Battery Installation

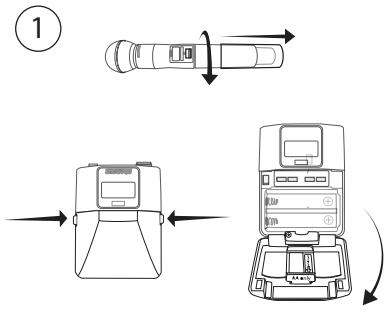

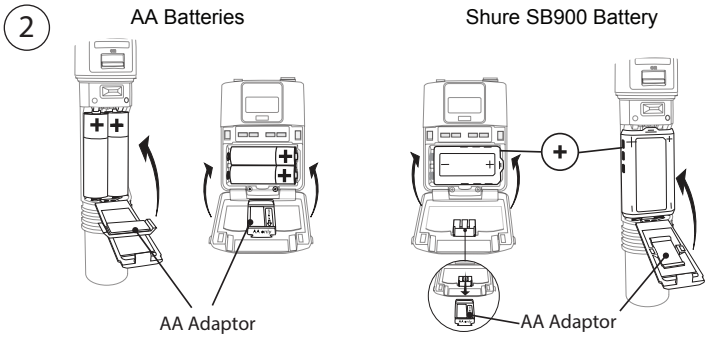

① **Accessing the Battery Compartment**
Press the side tabs on the bodypack or unscrew the cover on the handheld as shown to access the battery compartment.

② **Installing Batteries**
- **AA Batteries:** Place batteries (note polarity markings) and AA Adaptor as shown
- **Shure SB900 Battery:** Place battery as shown (note polarity markings), remove AA Adaptor from bodypack transmitter, stow AA Adaptor in door for handheld transmitter

Note: If using AA batteries, set the battery type using the transmitter menu.

Setting the AA Battery Type

When powering the transmitter with AA batteries, set the battery type in the transmitter menu to match the installed battery type to ensure accurate reporting of transmitter runtime. If a Shure SB900 rechargeable battery is installed, selecting a battery type is not necessary and the battery type menu will not be displayed.

1. Press the **menu** button to navigate to the battery icon.
2. Use the ▼▲ buttons to select the installed battery type:
   - **AL** = Alkaline
   - **nH** = Nickel Metal Hydride
   - **Li** = Lithium Primary
3. Press **enter** to save.

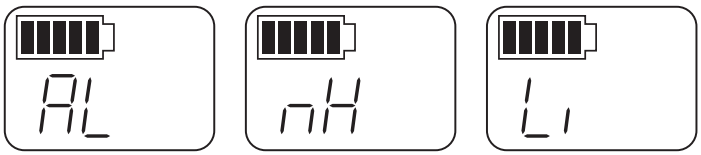

Do Not Duplicate or Redistribute

Transmitter Display

① **Battery Indicator**

Bars displayed indicate remaining battery life.

② **Home Screen Display: Group and Channel/Frequency/ SB900 Battery Runtime**

Use the arrow keys to select one of the following home screen displays:

Group and Channel	SB900 battery runtime	Frequency

③ **Encryption Status**

Icon displayed when encryption is enabled.

④ **Lock**

Displayed when transmitter controls are locked.

⑤ **RF Power**

RF power setting (**Lo** or **Hi**).

⑥ **Mic Offset**

Displays **mic offset** level in 3 dB increments.

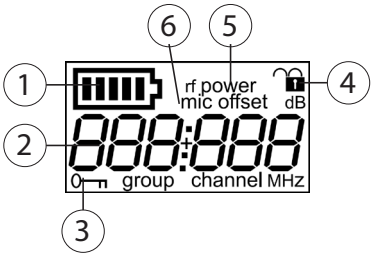

Note: Group settings are not available in all regions - use channel settings to configure components.

Transmitter controls

- To access the menu options from the home screen, press the **menu** button. Each additional press of the **menu** button advances to the next menu screen.
- To increase, decrease or change a parameter, use the ▼▲ buttons
- To save a menu change, press **enter**
- To exit the menu without saving a change, press the **menu** button

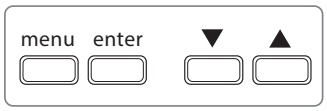

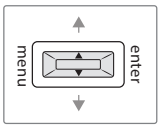

Note: Group settings are not available in all regions - use channel settings to configure components.

Transmitter Menu Options and Navigation

The transmitter features individual menu screens for setting up and adjusting the transmitter. The following menu options are available starting from the transmitter home screen:

① **Home Screen**

Use the arrow keys to select one of the following home screen displays:

- Battery Icon/group and channel
- Battery Icon/frequency
- Battery Icon/Battery Runtime (SB900 installed)

② **group**

Use the arrow buttons to scroll through the groups.

③ **channel**

Use the arrow buttons to scroll through the channels.

④ **frequency**

Use the arrow buttons to adjust the frequency. Press and hold for faster scrolling.

⑤ **lock**

Select a lock option:

- **On** = controls locked
- **OFF** = controls unlocked

⑥ **rf power**

Select an rf power setting:

- Lo = 1 mW
- Hi = 10 mW

⑦ **mic offset dB**

Use to match audio levels between two transmitters used in a combo system. Range is 0 to 21 dB (3 dB increments). Adjustments occur in realtime

⑧ **battery type**

Use to set the battery type to match the installed AA battery type to ensure accurate battery metering. Menu is not displayed when Shure SB900 batteries are installed.

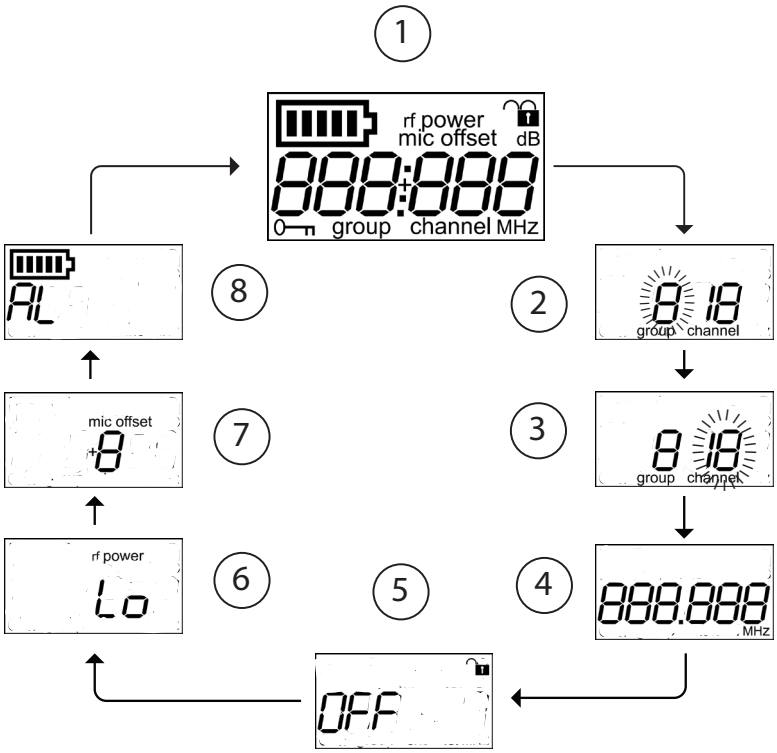

Tips for Editing Menu Parameters

- To access the menu options from the home screen, press the **menu** button. Each additional press of the **menu** button advances to the next menu screen.
- A menu setting will blink when editing is enabled
- To increase, decrease or change a parameter, use the arrow buttons
- To save a menu change, press **enter**
- To exit the menu without saving a change, press **menu**

Do Not Duplicate or Redistribute

Receiver Display

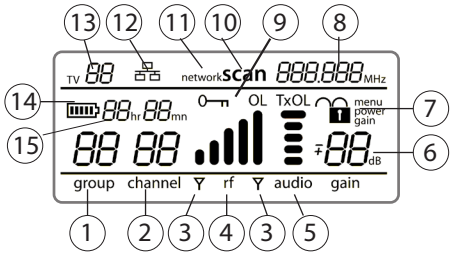

① **Group**
Displays group setting.

② **Channel**
Displays channel setting.

③ **Active Antenna Indicator**
Illuminates to indicate which antenna is active.

④ **RF Signal Meter**
Number of bars displayed corresponds to RF signal level - **OL** = overload

⑤ **Audio Meter**
Number of bars displayed corresponds to audio level.

- **OL** = Illuminates when receiver audio limiter is active to prevent clipping
- **TxOL** = Illuminates when transmitter input is overloaded. Reduce input from microphone or instrument to prevent clipping.

⑥ **Gain Level**
Displays receiver gain setting in 1 dB increments.

⑦ **Receiver Lock Status**
Lock icon and name of locked control:

- **menu**
- **power**
- **gain**

⑧ **Frequency Setting**
Selected frequency (MHz)

⑨ **Encryption Status**
Illuminates when encryption is enabled.

⑩ **Scan**
Displayed when **scan** function is active

⑪ **Network Scan**
Displayed when **network scan** function is active

⑫ **Network Connection Indicator**
Illuminates when additional Shure components are detected on the network.

⑬ **TV Channel**
Displays the number of the TV channel containing the selected frequency.

⑭ **Transmitter Battery Icon**
Indicates remaining battery life.

⑮ **SB900 Battery Runtime**
When the transmitter is powered by a Shure SB900 rechargeable battery, remaining runtime is displayed in hours:minutes.

Navigating the Receiver Menus

The receiver has a main menu for setup and configuration and an advanced menu to access additional receiver functions.

Main Menu

Press the **menu** button to access the menu and to cycle through the options in the following order. Each additional press of the **menu** button advances to a new option.

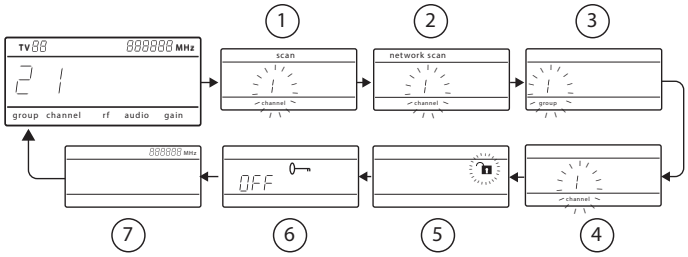

① **Scan**
Receiver automatically scans for the best available frequency

② **Network Scan**
Scans to find frequencies for networked receivers operating in the same frequency band

③ **Group**
Edit the receiver group settings

④ **Channel**
Edit the receiver channel settings

⑤ **Lock**
Choose a control lock option

⑥ **Encryption**
Use the arrow buttons to enable encryption (**on**) or disable encryption (**off**)

⑦ **Frequency**
Use the arrow buttons to edit the frequency value

Advanced Menu

Starting from the main menu home screen, press **menu** while holding the **enter** button.

Each additional press of the **menu** button advances to the next menu screen.

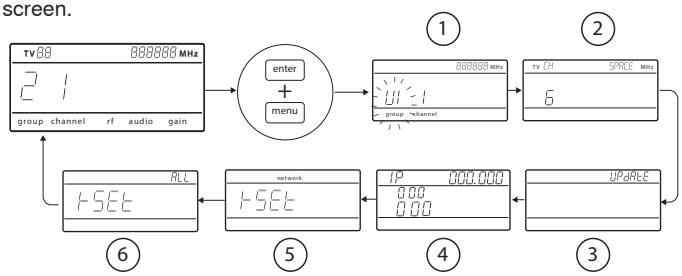

① **Custom Groups**
Use to add channels and frequencies to Custom Groups

② **TV Channel Spacing**
Selects the regional bandwidth for TV channel spacing

③ **Firmware Update**
Use to update receiver and transmitter firmware

④ **IP Settings**
Use to select and edit IP settings

⑤ **Network Reset**
Returns network settings and IP address to default setting

⑥ **Factory Reset**
Restores factory settings

For application and configuration details, see the related guide topic for each advanced feature.

Tips for Editing Menu Parameters

- To access the menu options from the home screen, press the **menu** button. Each additional press of the **menu** button advances to the next menu screen.
- To increase, decrease or change a parameter, use the arrow buttons
- A menu setting will blink when editing is enabled
- To save a menu change, press **enter**
- To exit the menu without saving a change, press **menu**
- To access the advanced menu, press **menu** while holding the **enter** button

Do Not Duplicate or Redistribute

AA Batteries and Transmitter Runtimes

QLX-D transmitters are compatible with the following AA battery types:

- Alkaline
- Lithium Primary
- Nickel Metal Hydride (NiMH)

Transmitter Runtime

A 5-segment battery indicator representing the charge level of the transmitter battery is displayed on the screens of the transmitter and receiver. The following tables contain the approximate remaining transmitter runtime in hours:minutes.

Alkaline Batteries: Up to 9 Hours of Runtime

Battery Indicator	Approximate Runtime Remaining (hours:minutes)
	9:00 to 7:15
	7:15 to 5:30
	5:30 to 3:45
	3:45 to 2:00
	2:00 to 0:20
	0:20 to 0:00

NiMH Batteries: Up to 10 Hours of Runtime

Battery Indicator	Approximate Runtime Remaining (hours:minutes)
	10:00 to 8:00
	8:00 to 6:00
	6:00 to 4:00
	4:00 to 2:00
	2:00 to 0:20
	0:20 to 0:00

Lithium Primary Batteries: Up to 16 Hours of Runtime

Battery Indicator	Approximate Runtime Remaining (hours:minutes)
	16:00 to 12:45
	12:45 to 9:30
	9:30 to 6:30
	6:30 to 3:15
	3:15 to 0:20
	0:20 to 0:00

Shure SB900 Rechargeable Battery

Shure SB900 lithium-ion batteries offer a rechargeable option for powering the QLX-D transmitters. Batteries quickly charge to 50% capacity in one hour and reach full charge within three hours.

Single chargers and multiple bay chargers are available to recharge the Shure batteries.

Caution: Only charge Shure rechargeable batteries with a Shure battery charger.

Single Bay Charger

The single bay charger offers a compact charging solution.

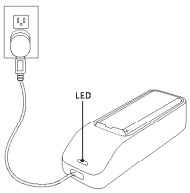

1. Plug the charger into an AC power source or USB port.
2. Insert a battery into the charging bay.
3. Monitor the charging status LEDs until charging is complete.

Charging Status LED

Color	Status
Red	Charging
Green	Charging Complete
Amber Flashing	Fault: check connections and battery
Off	No battery in bay

Important Tips for Care and Storage of Shure Rechargeable Batteries

Proper care and storage of Shure batteries results in reliable performance and ensures a long lifetime.

- Always store batteries and transmitters at room temperature
- Ideally, batteries should be charged to approximately 40% of capacity for long-term storage
- During storage, check batteries every 6 months and recharge to 40% of capacity as needed

Multiple Bay Chargers

Shure offers two models of multiple bay chargers:

- SBC-200 two bay charger
- SBC-800 eight bay charger

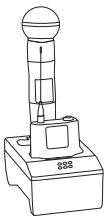

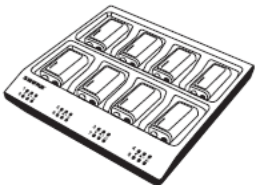

Multiple bay chargers can charge individual batteries or batteries installed in transmitters.

1. Plug the charger into an AC power source.
2. Insert batteries or transmitters into the charging bay.
3. Monitor the charging status LEDs until charging is complete.

Charging Status LED

Color	Status
Green	Charging Complete
Green/Red	Charge level above 90%
Red	Charging
Amber Flashing	Fault: check connections and battery
Off	No battery in bay

Do Not Duplicate or Redistribute

Creating Audio Channels

A wireless audio channel is formed when a receiver and transmitter are tuned to the same frequency. To ease setup, frequencies available to the QLX-D system are organized into groups and channels. Each group contains a number of channels, and each channel is assigned to a specific preset frequency.

The QLX-D system provides 3 methods for tuning the receiver and transmitter to the same frequency:

- **Scan and IR Sync:** The receiver scans the RF spectrum for the best available frequency and an IR sync automatically tunes the transmitter to the receiver frequency
- **Manual Group and Channel Assignment:** Manually setting the receiver and transmitter to the same group and channel number to form an audio channel
- **Manual Frequency Assignment:** Manually setting the receiver and transmitter to the same frequency rather than group and channel to form an audio channel

Note: Group settings are not available in all regions - use channel settings to configure components.

Scan and IR Sync

The simplest way to create an audio channel is to use the scan function to find the best available receiver channel, and then use the IR sync feature to automatically tune the transmitter to the receiver channel.

Step 1: Scanning to Find the Best Channel

The Scan function automatically selects the best available receiver channel.

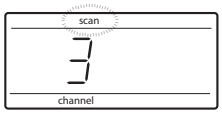

1. Navigate to the **Scan** menu option.
2. Press **enter** to start the scan.

When the scan is complete, the receiver will automatically be set to the best available channel.

Step 2: IR Sync for Automatic Transmitter Set Up

Performing an IR Sync automatically tunes the transmitter to match the receiver frequency, forming a wireless audio channel.

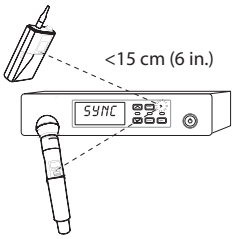

1. Press the **sync** button on the receiver. The red **ir** LED will blink indicating that sync mode is active.
2. Align the IR sync windows of the transmitter and receiver at a distance of <15 cm (6 in.). When the transmitter and receiver are aligned, the red **ir** LED remains on and the sync will automatically occur.
3. **sync good** appears on the display when IR sync is complete. The blue **rf** LED will illuminate indicating that the transmitter is within range of the receiver.

   Note: If the IR sync fails, repeat the IR sync procedure, carefully maintaining alignment between the IR windows of the transmitter and receiver.

Manual Group and Channel Assignment

An audio channel can be manually created by simply setting the receiver and transmitter to the same group number and channel number. For example, a receiver set to Group 2, Channel 3 and a transmitter set to Group 2, Channel 3 would form an audio channel.

Use manual group and channel configuration to assign specific groups and channels to receivers and transmitters as an alternative method to automatically creating channels with IR sync.

Use the following steps to set the group and channel in the receiver and transmitter:

1. Navigate to the **group** setting
2. Use the arrow buttons to scroll through the groups.
3. Press **enter** to select a group.
4. Next, Use the arrow buttons to select a **channel**.
5. Press **enter** to save.

Manual Frequency Selection

Manual frequency selection is an alternative to using groups and channels to set the transmitter and receiver to a specific frequency. For example, an audio channel can be created by setting the receiver and transmitter to same frequency.

Setting the Receiver Frequency

1. Press **menu** to navigate to the **frequency** setting option.
2. Use the ∧∨ buttons to adjust the frequency. Press and hold for faster scrolling.
3. Press **enter** to save.

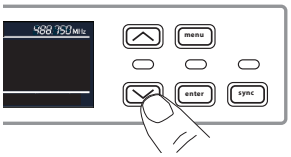

Setting the Transmitter Frequency

1. Press **menu** to navigate to the **frequency** setting option.
2. Use the ∧∨ buttons to adjust the frequency. Press and hold for faster scrolling.
3. Press **enter** to save.

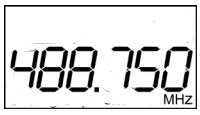

Do Not Duplicate or Redistribute

Receiver Gain Adjustment

The gain control sets the overall signal level for the system.

From the receiver home screen, use the arrow buttons to increase or decrease the gain:

- A single button press adjusts the gain in 1 dB increments
- Press and hold the button for larger adjustments

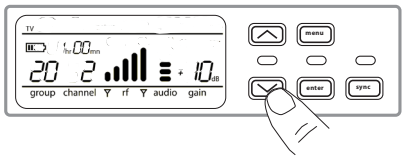

Test the transmitter at performance levels while monitoring the **audio** meter and the **audio** LED.

Tip: Set the gain to a level where the **audio** LED appears green or yellow, with only the highest audio peaks causing the LED to occasionally turn red and engage the limiter. Reduce the gain if there is audible distortion of the audio.

Setting the Transmitter RF Power

The transmitter offers two RF power settings which determine the transmitter range.

- **Lo** = 1 mW
- **Hi** = 10 mW

Use the **Lo** setting when the transmitter and receiver are in close proximity or when multiple transmitters are in use. Use the **Hi** setting if additional range is needed.

1. Navigate to the transmitter **rf power** menu.
2. Use the arrow buttons to select **Hi** or **Lo**.
3. Press **enter** to save.

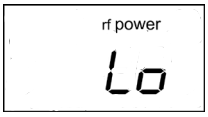

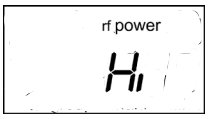

Wearing the Bodypack Transmitter

Clip the transmitter to a belt or slide a guitar strap through the transmitter clip as shown.

For best results, the belt should be pressed against the base of the clip.

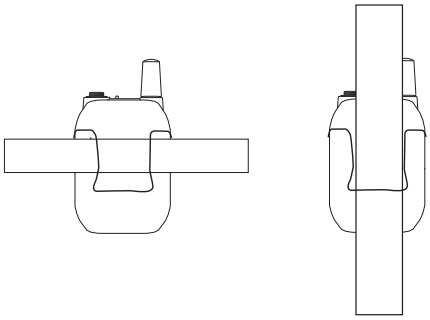

Setting Regional TV Channel Spacing

The parameter for TV channel spacing allows the receiver to match regional TV bandwidth usage and accurately display local TV channels.

The following channel bandwidth options are available:

- **6 MHz**
- **7 MHz**
- **8 MHz**
- **6 JP** (Japan)
- **off** (use to turn off TV channel display)

To set the TV channel spacing:

1. Press and hold the **enter** button, and then press the **menu** button to access the advanced features menu.
2. Press the **menu** button to navigate to the **TVCH** menu.
3. Use the arrow buttons to select the channel bandwidth that corresponds to the region.
4. Press **enter** to save.

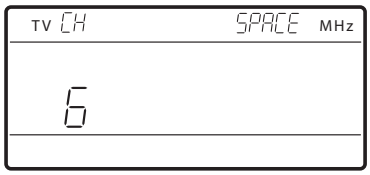

Do Not Duplicate or Redistribute

Control Lock Options for the Receiver and Transmitter

Control lock options are available for both the receiver and the transmitter to protect against accidental or unauthorized changes to the settings. Locks can be directly set from the component menu, or remotely set from WWB6. To maintain protection, controls remain locked when the transmitter is turned off and turned on.

Locking and Unlocking the Receiver Controls

The receiver has the following control lock options which can be used separately or in any combination:

- **gain:** locks the arrow buttons to prevent changes to the audio gain settings.
- **menu:** prevents access to menu items and IR sync (gain controls and power switch remain active)
- **power:** disables power switch (gain and menu controls remain active)

To lock a receiver control:

1. Use the **menu** button to navigate to the lock settings.
2. Press the arrow buttons to add or remove the lock options shown next to the lock icon.
3. Press **enter** save the lock settings.

To unlock a receiver:

Tip: To unlock the menu and clear all locks, press and hold the **menu** button while in the home screen until the unlock icon appears. Press **enter** to confirm and save change.

1. To unlock **gain** or **power** settings, navigate to the lock settings by pressing the **menu** button.
2. Press the arrow buttons to de-select a lock option.
3. Press **enter** to confirm and save change.

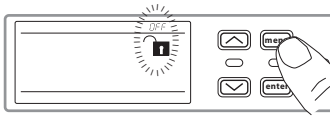

Locking and Unlocking Transmitter Controls

The transmitter controls can be locked or unlocked by selecting **On** (locked) or **OFF** (unlocked) from the transmitter lock menu.

If an attempt is made to access a locked control, the lock icon will flash, indicating that the transmitter controls are locked.

To set a transmitter lock:

1. Use the **menu** button to navigate to the lock settings.
2. Press the ∧∨ buttons to select **on**.
3. Press **enter** to save. The lock icon displayed on the screen, indicates that the control locks are enabled

To unlock the transmitter:

1. Press and hold the **menu** until **OFF** and the unlock icon appear on the display
2. Press **enter** to confirm the change and unlock the transmitter.

Audio Signal Encryption

The QLX-D receiver features Advanced Encryption Standard (AES-256) to protect the audio signal. When encryption is enabled, the receiver generates a unique encryption key which is shared with a the transmitter during an IR sync. Transmitters and receivers that share an encryption key form a protected audio path, preventing unauthorized access from other receivers. To maintain security, components remain encrypted when turned off and on.

Creating an Encrypted Audio Channel

1. Press the **menu** button to navigate to the encryption menu, indicated by the key icon.
2. Use the arrow buttons to select an encryption option:
   - **on** = encryption enabled
   - **OFF** = encryption disabled
3. Press **enter** to save. The key icon will be shown on the receiver display.
4. Press the **sync** button and align the IR sync windows of the transmitter and receiver. The encryption key icon will appear on the transmitter screen when the IR sync is complete and the encryption key has been transferred from the receiver.

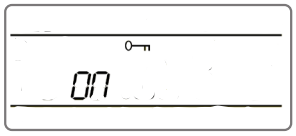

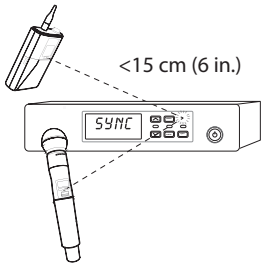

Additional transmitters can share the same encryption key with a single receiver. Perform an IR sync to encrypt each additional transmitter.

Note: When **OFF** is selected from the receiver menu to disable encryption, perform an IR sync to clear the encryption key from the transmitter and allow free reception by other receivers.

Removing Encryption

1. Press the **menu** button to navigate to the encryption menu.
2. Select **OFF**.
3. Press enter to save.
4. IR sync the transmitter and receiver to clear the encryption key from the transmitter and allow free reception by other receivers.

Note: If encryption is set from **off** to **on**, the receiver will generate a new encryption key and must be IR synced to the transmitter to share the new key.

Do Not Duplicate or Redistribute

Linking Two Transmitters to a Receiver

Linking two transmitters to a receiver offers the flexibility to provide a performer with either a handheld or bodypack transmitter to meet their preference. Two instruments with bodypack transmitters can also be linked to a single receiver.

Note: Only turn on and operate one transmitter at time to prevent interference between the transmitters.

Syncing the Transmitters to the Receiver

Both transmitters must be individually linked to the receiver by performing an IR Sync.

1. Turn on the first transmitter and perform an IR Sync with the receiver.
2. Perform a sound check and adjust the transmitter gain if necessary. When finished, turn off the transmitter.
3. Turn on the second transmitter and perform an IR Sync with the receiver.
4. Test the transmitter at performance conditions and adjust the transmitter gain if necessary. When finished, turn off the transmitter.

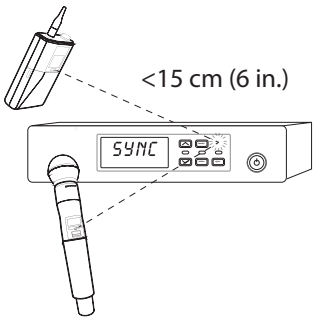

Matching Transmitter Audio Levels with Mic Offset

Balance the audio levels with **Mic Offset** to eliminate audible volume differences between transmitters. If using a single transmitter, set **Mic Offset** to 0 dB.

1. Turn on the first transmitter and perform a sound check to test the audio level. Turn off the transmitter when finished.
2. Turn on the second transmitter and perform a sound check to test the audio level.
3. If there is an audible difference in the sound level between the transmitters, navigate to the **Mic Offset** menu on the transmitter to increase or decrease the Mic Offset in realtime to match the audio levels.

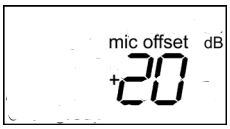

Custom Groups

Specific channels and frequencies can be selected and placed into custom groups. Custom groups are commonly used to assign networked receivers to specific range of frequencies or to pre-configure receivers for rental applications. Once a custom group is loaded, only frequencies within the group will be available for audio channels.

Creating Custom Groups

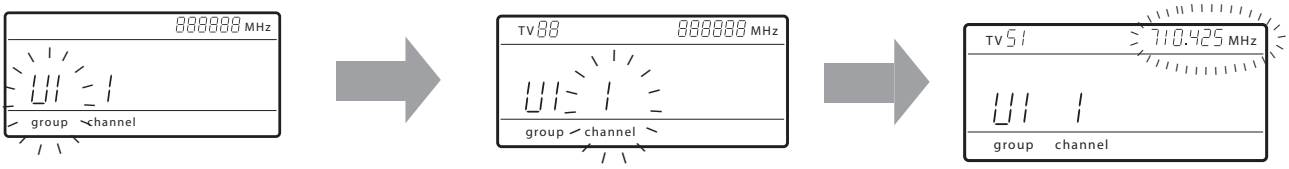

Selecting A Custom Group

The receiver has 6 custom groups available named U1, U2, U3, U4, U5, and U6.

Press **menu** while holding the **enter** button to access the Custom Group screen.

Press **enter** to enable editing of a group (indicated by the group flashing).

User the arrow buttons to select a group (U1 to U6).

Press **enter** to advance to channel selection.

Selecting a Channel

Use the arrow buttons to select a channel (1-60). Each group can contain up to 60 channels (frequencies).

Press **enter** to save the selected channel and advance to frequency assignment.

Assigning a Frequency to a Channel

Use the arrow buttons to assign a frequency to the selected channel.

Press **enter** to save.

After pressing **enter**, the channel will flash to allow for adding more channels and frequencies to the custom group. To add more channels and frequencies, repeat steps 1 and 2. When finished, press the **menu** button several times to return to the main menu.

Loading Custom Groups to Networked Receivers

Deleting a Custom Group

1. Press **menu** while holding the **enter** button to access the Custom Group screen.
2. Press **enter** to enable editing of a group (indicated by the group flashing).
3. User the arrow buttons to navigate to display the group number and the words **DEL**.
4. Press **enter** to delete the group.

Creating Custom Groups using Wireless Work Bench 6

Custom groups can be created in WWB6 by accessing the Frequency Coordination tab. Refer to the WWB6 help system for detailed instructions for configuring Custom Groups.

Do Not Duplicate or Redistribute

Networking

The receiver uses an Ethernet connection to network with other components and includes an internal DHCP client for automatic network configuration when connected to a DHCP enabled router.

Connecting to a Network

1. Insert an Ethernet cable in the Ethernet port on the rear of the receiver.
2. Connect the cable to a computer or router.
3. The port LEDs on the receiver will illuminate to indicate network connectivity and network traffic.

Automatic IP Addressing

1. Enable a DHCP service on the server or use a DHCP enabled router.
2. When the receiver is powered on, the DHCP server will automatically assign an IP address to the receiver.

Tip: Use the network reset option available in the advanced features menu to return the receiver to the default DHCP addressing mode.

Configuration Tips

- Use shielded Cat 5 or better Ethernet cables to ensure reliable network performance
- The LEDs on the Ethernet port illuminate indicating a network connection is active
- The network icon illuminates when the receiver detects other Shure devices on the network
- All components must operate on the same subnet
- Use multiple Ethernet switches to extend the network for larger installations

Network Troubleshooting

- Use only one DHCP server per network
- All devices must share the same subnet mask
- All receivers must have the same level of firmware revision installed
- Look for the illuminated network icon on the front panel of each device:

  If the icon is not illuminated, check the cable connection and the LEDs on the Ethernet port.

  If the Ethernet port LEDs are not illuminated and the cable is plugged in, replace the cable and recheck the LEDs and network icon.

To check connectivity of WWB6 to the network:

1. Start WWB6 software and use Inventory view to see devices connected to the network.
2. If not, find the IP address from one of the devices on the network (such as a receiver) and see if you can ping it from the computer running WWB6.
3. From a WINDOWS/MAC command prompt, type ‘ping IPADDRESS’ of the device (e.g. "ping 192.168.1.100").
4. If the ping returns success (no packet loss), then the computer can communicate with the device on the network. If the ping returns failure (100% packet loss), then verify that the IP address of the computer is on the same subnet as the receiver.
5. If the pings are successful and the devices still do not show up in the WWB6 inventory, check to ensure all firewalls are either disabled or allow the WWB network traffic to pass to the application. Check that firewall settings are not blocking network access.

Setting the IP Address and Subnet Address Manually

IP addresses and Subnet addresses can be manually set from the advanced menu in the receiver or from the monitor panel in Wireless Workbench 6.

Network settings entered manually must be valid and conform to IP protocols to ensure proper network communication.

Receiver Menu

IP addresses and subnet addresses contain 4 groups of numbers. Each group and contain up to 3 digits. A decimal point separates each group.

When setting an IP address or subnet address, each of the 4 groups must be edited individually. The following diagram shows how the groups are mapped to the receiver display:

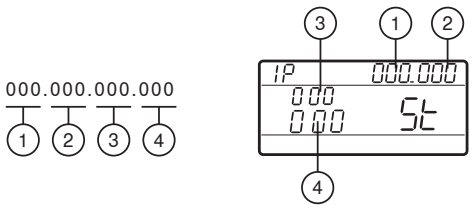

1. Press menu while holding the **enter** button to access the advanced menu.
2. Press the **menu** button to navigate to the IP menu.
3. Use the arrow buttons to set the mode to **St** and press **enter**.
4. Use the arrow buttons to edit the first group. Press **enter** to save and continue to the next group.
5. Use the arrow buttons and **enter** button to edit the remaining 3 groups.
6. When group 4 has been edited, the display will show the subnet menu. Press **enter** to skip editing the subnet or use the arrow and **enter** buttons to edit the 4 subnet groups.
7. When finished, press enter to save settings

Wireless Workbench 6

1. Open the **Channel Properties** tab in WWB6.
2. Click on **Utilities** and set the networking mode to **Manual**.
3. Enter valid numbers in the **IP** and **Subnet** fields.
4. When finished, select **Apply**.

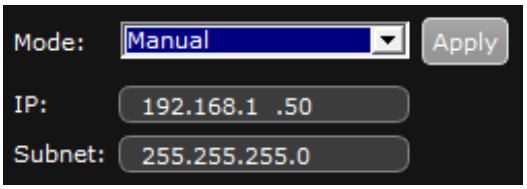

Do Not Duplicate or Redistribute

Network Scan

The Network Scan feature automates frequency assignment by using a single receiver to scan and deploy frequencies to all networked receiver within the same frequency band.

Network Scanning and Frequency Deployment

Prior to performing a network scan, turn on all receivers and allow 30 to 60 seconds for all receivers to join the network.

1. Connect receivers to an active Ethernet network. All receivers must be on the same subnet.
2. To start a network scan, press the **menu** button on any networked receiver and navigate to the **network scan** menu. Press **enter**.
3. When the scan is complete, press **enter** to deploy the best available frequencies to all receivers in the network.

   Tip: to cancel a frequency deployment, press the **menu** button.
4. The front panel LEDs on each receiver will blink when a deployed frequency is assigned.

Note: Full frequency deployment may not occur if the number of receivers in the network exceeds the number of available frequencies.

Connecting to an External Control System

The receiver connects to external controls systems (AMX or Crestron) via Ethernet cables. Use only one controller per system to avoid messaging conflicts.

- Connection: Ethernet (TCP/IP; QLXD receiver is the client)
- Port: 2202

For a comprehensive list of command strings, visit: http://shure.custhelp.com/

Shure AXT600 Spectrum Manager Compatibility

QLX-D receivers are compatible with the Axient AXT600 Spectrum Manager. Networked receivers will appear in the device inventory and frequencies from the Compatible Frequency List can be deployed and monitored by the Spectrum Manager. For more information regarding the Spectrum Manager, see the Axient System Guide.

Do Not Duplicate or Redistribute

Managing QLX-D with Wireless Workbench 6

Shire's Wireless Workbench 6 (WWB6) software enables networked monitoring and control of the QLX-D receiver. Additional tools in WWB6 offer RF spectrum monitoring, network configuration, and firmware updating.

Visit: www.shure.com/wwb for a free download of Wireless Workbench software.

Managing and Monitoring Settings

Manage and monitor receiver settings by opening the **Monitor** tab in Wireless Workbench. Click on the **Settings** button to show or hide the full **Properties** window.

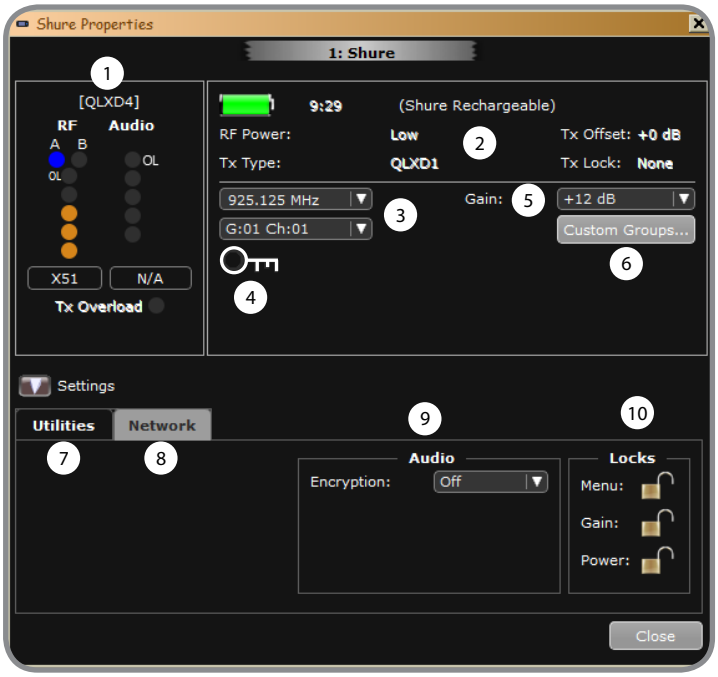

① **RF and Audio Meters**
Displays: current levels, band, TV, and TX Overload

② **Transmitter Settings**
Displays: RF Power, Tx Type, Mic Offset, Tx Lock

③ **Frequency Settings**
Use drop-down to edit frequency value

④ **Encryption Icon**
Illuminates when Encryption is enabled

⑤ **Receiver Gain Setting**
Use drop-down to increase or decrease gain settings

⑥ **Custom Groups**
Click to enter to create custom groups

⑦ **Utilities**
Access receiver functions

⑧ **Network Tab**
Set network mode, view: IP address, Subnet, MAC, Firmware version, Network reset

⑨ **Encryption**
Enable/Disable Encryption

⑩ **Locks**
Lock/Unlock: Menu, Gain, Power

Viewing the Receiver in WWB6 Inventory

Click on the **Inventory** tab to view the receiver channels. Double-click on parameters to enable editing.

	Model	Channel Name	Device ID	Band
	QLXD4	Shure	[QLXD4]	P51

Tip: Clicking on the receiver icon next to the channel name flashes the front panel LEDs on the receiver for remote identification.

Hardware Identify

When Hardware Identify is triggered from a receiver, the corresponding representation of that receiver is flashed in the WWB inventory display, allowing for remote identification.

Hardware Identify can be triggered from the receiver by pressing and holding the enter button for at least 3 seconds. Click the **Dismiss** button on the WWB Inventory screen to exit the function.

Do Not Duplicate or Redistribute

Firmware Updates

Firmware is embedded software in each component that controls functionality. Periodically, new versions of firmware are developed to incorporate additional features and enhancements.

Firmware Versioning

When updating receiver firmware, update transmitters to the same firmware version to ensure consistent operation.

The firmware version is numbered in the form of MAJOR.MINOR.PATCH (e.g., 1.2.14). At a minimum, all devices on the network (including transmitters), must have the same MAJOR and MINOR firmware version numbers (e.g., 1.2.x).

Downloading and Updating Firmware

A free Shure Update Utility tool is available by visiting www.shure.com. The Shure Update Utility is also bundled with Shure Wireless Workbench software.

Refer to the help instructions to use the Shure Update Utility.

Updating the Receiver

CAUTION! Ensure that receiver power and network connections are maintained during a firmware update. Do not turn off the receiver until the update is complete.

1. Connect the receiver and computer to the same network.
2. Open the Shure Update Utility.
3. Click on the **firmware** tab to find available updates.
4. Use the **Import** button if manually importing firmware files.
5. Click the **Update Device** tab and check the **Version to install** box next to each device.
6. Click **Send Updates** to load the firmware to the networked devices.
7. When the download is complete, the receiver will reboot with the updated firmware installed.

Updating the Transmitter

When firmware is downloaded to the receiver, it includes firmware updates for the transmitter. Updated firmware is passed from the receiver to the transmitter using the IR Sync port.

1. Press **menu** while holding the **enter** button to access the advanced menu. Use the **menu** button to navigate to the **update** menu.
2. Press **enter** to start the update.
3. When the red IR LED flashes, align the receiver and transmitter IR sync ports. The red LED will remain illuminated to indicate correct alignment and the download will automatically start.
4. Maintain alignment during the update and monitor download progress (0 to 100%) on the receiver screen.
5. When the update is complete, **"TX Update good"** is shown on the receiver display.

Using QLX-D with a Shure ULX-D System

Transmitters and receivers from QLX-D and ULX-D component groups can be paired to form audio channels.

To ensure functionality, use the following settings on the ULX-D receivers and transmitters:

- Encryption set to **Off**
- High Density Mode set to **Off**
- Manually tune the receiver and transmitter to the same frequency. IR sync between QLX-D and ULX-D components is not supported.

To create an audio channel, manually set the receiver frequency to match the frequency of the transmitter.

Error Codes and Solutions

Error codes are generated when the receiver detects a condition that can potentially affect system performance.

If an error is displayed on the receiver, use the following table to identify the problem and find the corresponding solution.

Error Code	Description	Solutions
Err.001	Audio Compatibility	Update transmitter and receiver firmware to the latest version.
Err.002	Encryption Mismatch between Shure product lines	Set encryption to **off** for components from different Shure products lines, such as QLX-D and ULX-D.
Err.003	Encryption Mode Mismatch	Ensure that encryption is set to **on** or to **off** for both the receiver and transmitter.
Err.004	Band Mismatch	Receiver and transmitter are operating in overlapping frequencies from different bands.
Err.005	Frequency Mismatch	Receiver and transmitter are from bands that do not share compatible frequencies.
Err.006	No Frequencies Found	Rescan, select a different group, or use WWB to find a frequency.
Err.007	Firmware Mismatch	Update firmware on the transmitter and receiver.

Do Not Duplicate or Redistribute

Troubleshooting

Issue	See Solution...
No Sound	Power, Cables, or Radio Frequency
Faint sound or distortion	Gain, Cables, Reducing Interference or Radio Frequency
Lack of range, unwanted noise bursts, or dropouts	RF
Cannot turn transmitter off or change frequency settings, or can't program receiver	Interface locks

Power

Make sure that the receiver and transmitter are receiving sufficient voltage. Check the battery indicators. Replace or recharge the batteries if necessary.

Gain

Adjust the system gain on the front of the receiver. Ensure the **mic/line** switch setting (XLR output only) on the back of the receiver corresponds to the input of the mixing console, amplifier, or processor.

Cables

Check that all cables and connectors are fully engaged or locked into position. Inspect cables for damage. Replace if necessary.

Interface Locks

The transmitter and the receiver can be locked to prevent accidental or unauthorized changes. If a locked control is accessed, the lock icon on the display will flash. Follow the instructions to unlock the receiver or transmitter.

Firmware Mismatch

Paired transmitters and receivers must have the same firmware version installed to ensure consistent operation. See Firmware Updates topic for firmware update procedure.

Radio Frequency (RF)

The blue RF LED will illuminate when a linked transmitter is within range of the receiver. Measure the transmitter range before a performance to avoid operating beyond the specified transmitter range.

The RF meter bars indicate amount of RF power being received. This signal could be from the transmitter, **or it could be from an interfering source, such as a television broadcast**. If the meter shows a signal level when the transmitter is off, then that channel may have interference. Check the surrounding area for sources of interference or change the receiver to a clear frequency.

A red **RF** LED indicates RF overload. Avoid operating multiple systems in close proximity.

Frequency Compatibility

- Perform a Scan and Sync to ensure the transmitter and receiver are set to the same channel or frequency
- Look at the label on the transmitter and receiver to make sure they are in the same band (G50, J50, L50, etc...).

Reducing Interference

- Perform a scan to find the best open frequency. Perform an IR sync to transfer the settings to the transmitter.
- For multiple systems, make sure that each receiver is assigned to a unique channel. Interference will occur if two receivers are set to the same channel.
- Maintain a line of sight between transmitter and receiver antennas.
- Move receiver antennas away from metal objects or other sources of RF interference (such as CD players, computers, digital effects, network switches, network cables and Personal Stereo Monitor (PSM) wireless systems).
- Eliminate RF overload (see below).

Increasing Range

- Increase transmitter RF power level.
- Use an active directional antenna, antenna distribution system, or other antenna accessory to increase RF range.

Eliminating RF Overload

If the RF **OL** appears on the RF meter, try the following:

- Reduce the transmitter RF power level
- Move the transmitter further away from the receiver—at least 6 m (20 ft)
- If you are using active antennas, reduce antenna or amplifier gain.
- Use omnidirectional antennas

Do Not Duplicate or Redistribute

Single and Dual Rackmount Assembly

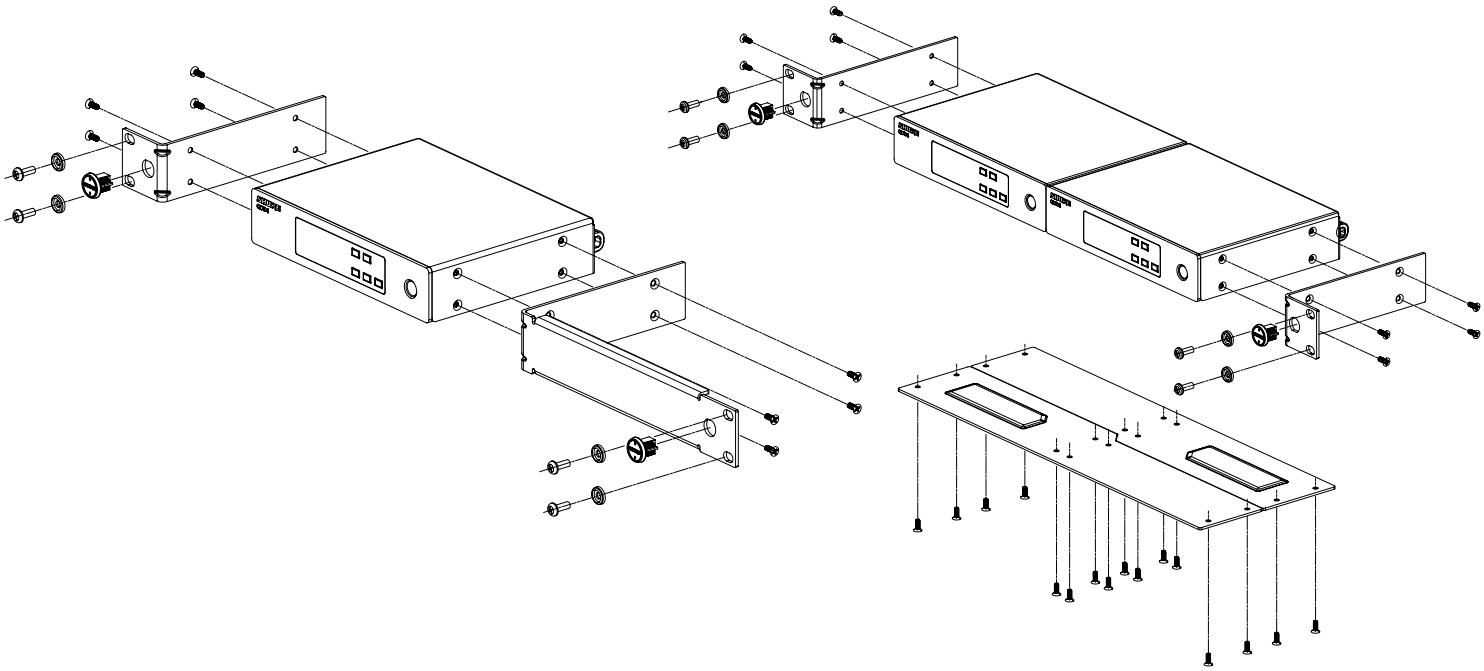

Securing AC power cord

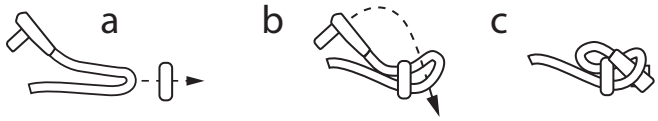

Installing Foot Pads

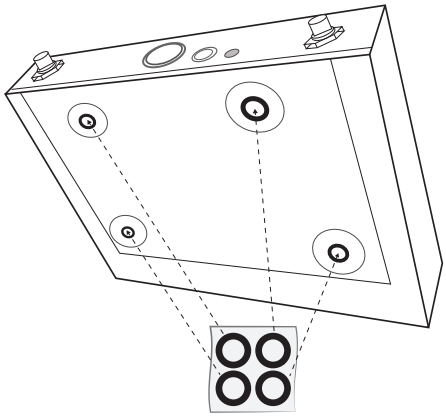

Receiver Output Connectors

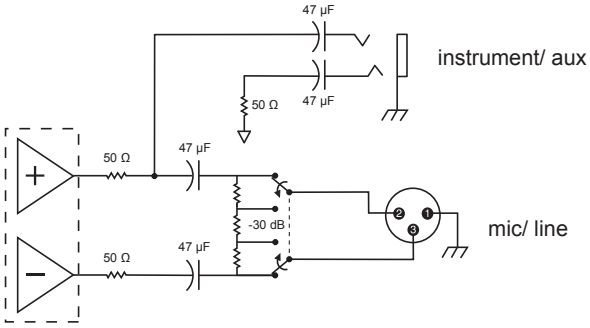

TA4M Connector

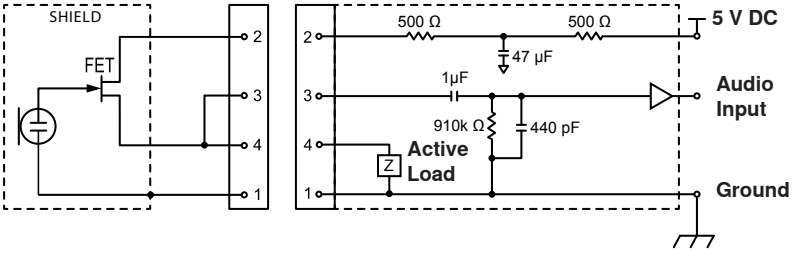

① Ground
② Bias Voltage
③ Audio Input
④ Ground

Do Not Duplicate or Redistribute

Specifications

RF Carrier Frequency Range
470–937.5 MHz, varies by region (See Frequency Range and Output Power table)

Working Range
100 m (330 ft)
Note: Actual range depends on RF signal absorption, reflection and interference.

RF Tuning Step Size
25 kHz, varies by region

Image Rejection
>70 dB, typical

RF Sensitivity
-97dBm at10(-5) BER

Latency
<2.9 ms

Audio Frequency Response

QLXD1	20 – 20 kHz (±1 dB)
QLXD2	Note: Dependent on microphone type

Audio Dynamic Range
System Gain @ +10
>120 dB, A-weighted, typical

Total Harmonic Distortion
–12 dBFS input, System Gain @ +10
<0.1%

System Audio Polarity
Positive pressure on microphone diaphragm produces positive voltage on pin 2 (with respect to pin 3 of XLR output) and the tip of the 6.35 mm (1/4-inch) output.

Operating Temperature Range
-18°C (0°F) to 50°C (122°F)
Note: Battery characteristics may limit this range.

Storage Temperature Range
-29°C (-20°F) to 74°C (165°F)
Note: Battery characteristics may limit this range.

QLXD4

Dimensions
197 mm x 171 mm x 42 mm (7.75 in. x 6.75 in. x 1.65 in.), H x W x D

Weight
913 g (2.0 lbs), without antennas

Housing
steel

Power Requirements
12 V DC @ 0.4 A, supplied by external power supply (tip positive)

RF Input

Spurious Rejection
>80 dB, typical

Connector Type
BNC

Impedance
50 Ω

Audio Output

Gain Adjustment Range
-18 to +42 dB in 1 dB steps

Configuration

1/4" (6.35 mm)	Impedance balanced (Tip=audio, Ring=no audio, Sleeve=ground)
XLR	balanced (1=ground, 2=audio +, 3=audio –)

Impedance

1/4" (6.35 mm)	100 Ω (50 Ω Unbalanced)
XLR	100 Ω

Full Scale Output

1/4" (6.35 mm)	+12 dBV
XLR	LINE setting= +18 dBV, MIC setting= -12 dBV

Mic/Line Switch
30 dB pad

Phantom Power Protection

1/4" (6.35 mm)	Yes
XLR	Yes

Networking

Network Interface
Single Port Ethernet 10/100 Mbps

Network Addressing Capability
DHCP or Manual IP address via WWB6

Maximum Cable Length
100 m (328 ft)

Do Not Duplicate or Redistribute

QLXD1

Mic Offset Range
0 to 21 dB (in 3 dB steps)

Battery Type
Shure SB900 Rechargeable Li-Ion or AA batteries 1.5 V

Battery Runtime

Shure SB900	>10 hours
alkaline	up to 9 hours

See Battery Runtime Chart

Dimensions
86 mm x 66 mm x 23 mm (3.4 in. x 2.6 in. x 0.9 in.) H x W x D

Weight
142 g (5.0 oz.), without batteries

Housing
Cast aluminum

Audio Input

Connector
4-Pin male mini connector (TA4M), See drawing for details

Configuration
Unbalanced

Impedance
1 MΩ, See drawing for details

Maximum Input Level
1 kHz at 1% THD

Preamplifier Equivalent Input Noise (EIN)
System Gain Setting ≥ +20
-120 dBV, A-weighted, typical

RF Output

Connector
SMA

Antenna Type
1/4 wave

Impedance
50 Ω

Occupied Bandwidth
<200 kHz

Modulation Type
Shure proprietary digital

Power
1 mW or 10 mW

QLXD2

Mic Offset Range
0 to 21 dB (in 3 dB steps)

Battery Type
Shure SB900 Rechargeable Li-Ion or AA batteries 1.5 V

Battery Runtime

Shure SB900	>10 hours
alkaline	up to 9 hours hours

See Battery Runtime Chart

Dimensions
256 mm x 51 mm (10.1 in. x 2.0 in.) L x Dia.

Weight
340 g (12.0 oz.), without batteries

Housing
Machined aluminum

Audio Input

Configuration
Unbalanced

Maximum Input Level
1 kHz at 1% THD
145 dB SPL (SM58), typical
Note: Dependent on microphone type

RF Output

Antenna Type
Integrated Single Band Helical

Occupied Bandwidth
<200 kHz

Modulation Type
Shure proprietary digital

Power
1 mW or 10 mW

Frequency Bands and Transmitter RF Power

Band	Frequency Range (MHz)	RF Power (mW)
G50	470 - 534	1 or 10
G51	470 - 534	1 or 10
G52	479 - 534	1 or 10
H50	534 - 598	1 or 10
H51	534 - 598	1 or 10
H52	534 - 565	1 or 10
H53	534 - 598	1 or 10
J50	572 - 636	1 or 10
J51	572 - 636	1 or 10
JB	806 - 810	1 or 10
K51	606 - 670	1 or 10

Band	Frequency Range (MHz)	RF Power (mW)
K52	606 - 670	1 or 10
L50	632 - 696	1 or 10
L51	632 - 696	1 or 10
L52	632 - 694	1 or 10
L53	632 - 714	1 or 10
P51	710 - 782	1 or 10
P52	710 - 782	1 or 10
Q51	794 - 806	1 or 10
S50	(823 - 832) (863 - 865)	1 or 10
X51	925 -937.5	1 or 10

Do Not Duplicate or Redistribute

Batteries/Chargers/Hardware

SHURE LITHIUM-ION RECHARGABLE BATTERY	SB900
8-Pack Shure Lithium-Ion Rechargeable Batteries	SBC800
8-Bay Shure Battery Charger,	SBC200
Dual Docking Charger with PS45US Power Supply	
Dual Docking Charger, Power Supply NOT Included	WA610
FRONT MOUNT ANTENNA KIT (INCLUDES 2 CABLES AND 2 BULKHEAD)	UA600
REMOTE ANTENNA BRACKET WITH BNC BULKHEAD ADAPTOR	UA505

Antennas and Antenna Accessories

ACTIVE DIRECTIONAL ANTENNA 470-790MHZ	UA874E
ACTIVE DIRECTIONAL ANTENNA 470-698MHZ	UA874US
ACTIVE DIRECTIONAL ANTENNA 470-900MHZ	UA874WB
ACTIVE DIRECTIONAL ANTENNA 925-952MHZ	UA874X
HELICAL ANTENNA, 470-900MHZ	HA-8089
HELICAL ANTENNA, 944-952MHZ	HA-8241
UNIDIRECTIONAL SUPER WIDEBAND ANTENNA	PA805SWB
UNIDIR. WIDEBAND ANTENNA 944-952MHZ	PA805X
In-line Power Supply	UABIAST-US

UHF Line Amplifiers

In-Line Antenna Amplifier, 792-810 MHz	UA830A
IN-LINE ANTENNA AMPLIFIER 470-698MHz	UA830USTV
In-Line Antenna Amplifier, 500-900 MHz	UA830WB
In-Line Antenna Amplifier	UA830X
PASSIVE OMNIDIRECTIONAL ANTENNA	UA860SWB

Cables and Splitters

COAXIAL CABLE, BNC-BNC, RG58C/U TYPE, 50 OHM, 2 FT LENGTH (0.6 M)	UA802
COAXIAL CABLE, BNC-BNC, RG58C/U TYPE, 50 OHM, 6 FT LENGTH (2 M)	UA806
COAXIAL CABLE, BNC-BNC, RG8X/U TYPE, 50 OHM, 25 FT LENGTH (7.5 M)	UA825
COAXIAL CABLE, BNC-BNC, RG8X/U TYPE, 50 OHM, 50 FT LENGTH (15 M)	UA850
COAXIAL CABLE, BNC-BNC, RG213/U TYPE, 50 OHM, 100 FT LENGTH (30 M)	UA8100
ETHERNET JUMPER CABLE, 8"	C8006
ETHERNET CABLE, 3 FT.	C803
ETHERNET CABLE, 10 FT.	C810
ETHERNET CABLE, RUGGEDIZED, 100 FT.	C8100
ETHERNET CABLE, RUGGEDIZED, 25 FT.	C825
ETHERNET CABLE, RUGGEDIZED, 50 FT.	C850

Active Antenna Splitters

ANTENNA/POWER DIST SYS DMPN	UA845 E
ANTENNA/POWER DIST. SYSTEM	UA845 E "B"
ANTENNA/POWER DIST. SYSTEM	UA845J
ANTENNA UHF-R 470-952 MHz	UA845-SWB
ANTENNA,POWER DIST UHF-R 470-952 MHz	UA845-SWB-AZ
ANTENNA UHF-R 470-952 MHz	UA845-SWB-BR
ANTENNA,POWER DIST UHF-R 470-952 MHz	UA845-SWB-C
ANTENNA,POWER DIST UHF-R 470-952 MHz	UA845-SWB-E
ANTENNA UHF-R 470-952 MHz	UA845-SWB-K
ANTENNA,POWER DIST UHF-R 470-952 MHz	UA845-SWB-UK
ANT/PWR DIST SYS (120V,782-806MHZ)	UA845-UA
REPL BY UA845 US	UA845US

Do Not Duplicate or Redistribute

Certifications

This product meets the Essential Requirements of all relevant European directives and is eligible for CE marking.

The CE Declaration of Conformity can be obtained from: www.shure.com/europe/compliance

Authorized European representative:
Shure Europe GmbH
Headquarters Europe, Middle East & Africa
Department: EMEA Approval
Jakob-Dieffenbacher-Str. 12
75031 Eppingen, Germany
Phone: 49-7262-92 49 0
Fax: 49-7262-92 49 11 4
Email: EMEAsupport@shure.de

Approved under the Declaration of Conformity (DoC) provision of FCC Part 15.

Certified by IC in Canada under RSS-210.

Conforms to electrical safety requirements based on IEC 60065.

Complies with and/or is certified to RSS-210, RSS-GEN.

Certified by IC in Canada under RSS-123 and RSS-102.

Certified under FCC Part 74.

QLXD1, QLXD2

IC: 616A-QLXD1G50, 616A-QLXD1H50, 616A-QLXD1J50, 616A-QLXD1L50, 616A-QLXD2G50, 616A-QLXD2H50, 616A-QLXD2J50, 616A-QLXD2L50.

FCC: DD4QLXD1G50, DD4QLXD1H50, DD4QLXD1J50, DD4QLXD1L50, DD4QLXD2G50, DD4QLXD2H50, DD4QLXD2J50, DD4QLXD2L50.

United States, Canada, Latin America, Caribbean:
Shure Incorporated
5800 West Touhy Avenue
Niles, IL 60714-4608 USA

Phone: 847-600-2000
Fax: 847-600-1212 (USA)
Fax: 847-600-6446
Email: info@shure.com

Europe, Middle East, Africa:
Shure Europe GmbH
Jakob-Dieffenbacher-Str. 12,
75031 Eppingen, Germany

Phone: 49-7262-92490
Fax: 49-7262-9249114
Email: info@shure.de

Asia, Pacific:
Shure Asia Limited
22/F, 625 King's Road
North Point, Island East
Hong Kong

Phone: 852-2893-4290
Fax: 852-2893-4055
Email: info@shure.com.hk

PT. GOSHEN SWARA INDONESIA
Kompleks Harco Mangga Dua Blok L No. 35 Jakarta Pusat

www.shure.com

I.16.GSI31.00501.0211